# DOWNTOWN SEWER IMPROVEMENTS AND DOWNTOWN SEWER PUMPING STATION
# ISSUED FOR BID

APRIL 2024

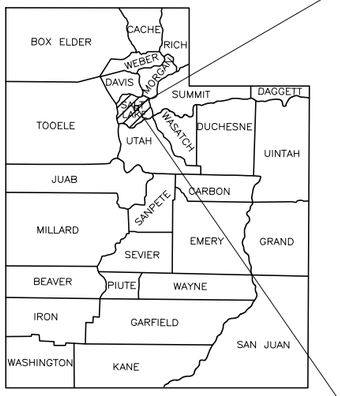


STATE OF UTAH

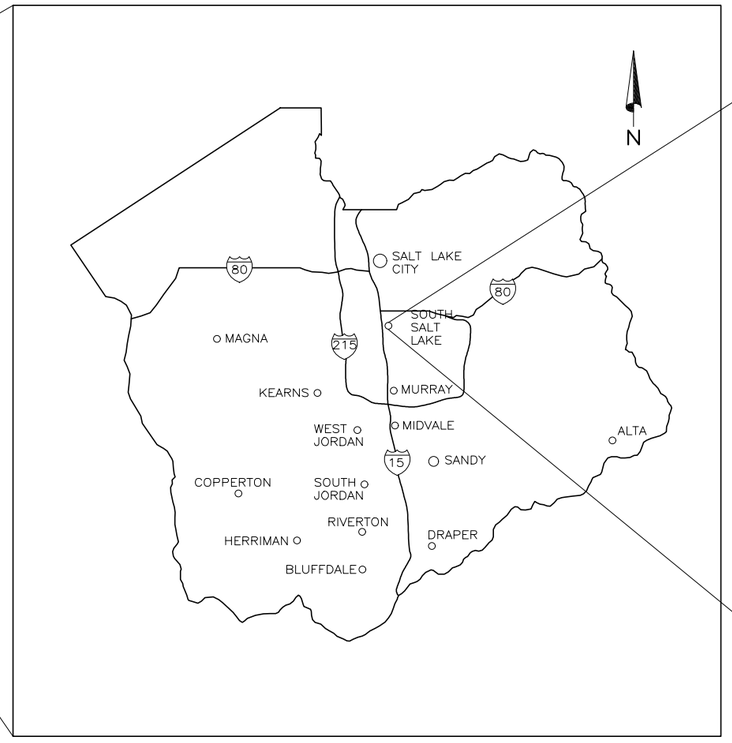


SALT LAKE COUNTY

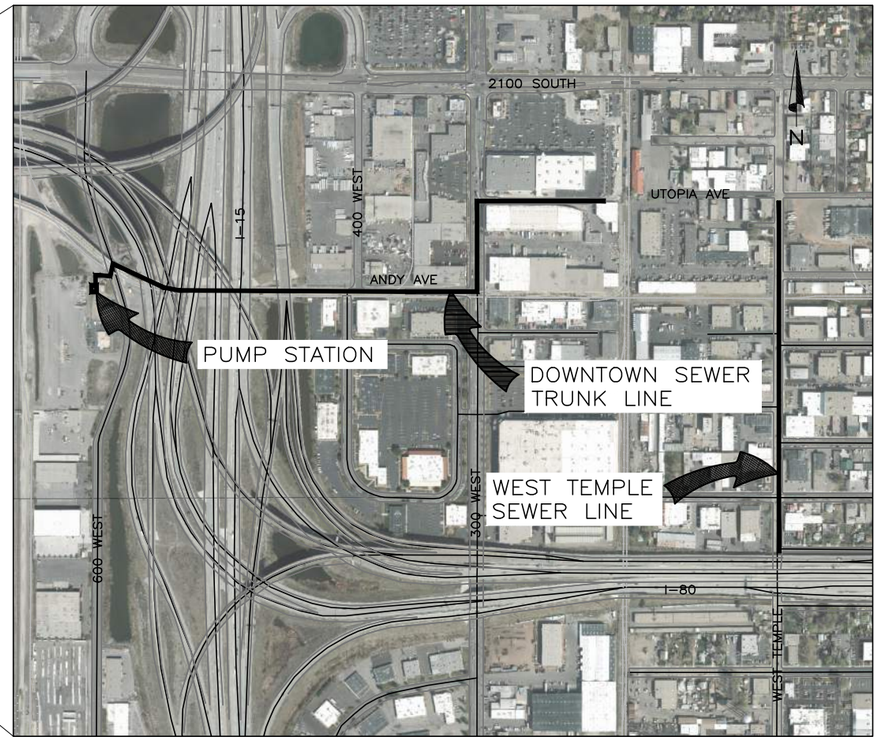


DOWNTOWN SEWER TRUNK LINE AND PUMPING STATION


HANSEN, ALLEN & LUCE

859 W. SOUTH JORDAN PKWY. SUITE 200
SOUTH JORDAN, UTAH 84095
(801) 566-5599

HANSEN, ALLEN & LUCE DESIGN TEAM

GREG S. THOMAS, P.E. – PROJECT MANAGER

AARON C. SPENCER, P.E. – PROJECT ENGINEER

ROBERT CONDER, S.E., P.E. – STRUCTURAL ENGINEER
(CONDER ENGINEERING, LLC)

ROBERT J. HILLYER, P.E. – ELECTRICAL ENGINEER
(HEATH ENGINEERING)

ROBERT J. KESLER, P.E. – HVAC ENGINEER
(HEATH ENGINEERING)

CITY OF SOUTH SALT LAKE

DENNIS PAY – CITY ENGINEER 801-483-6038

CITY HALL – THE CITY OF SOUTH SALT LAKE
220 EAST MORRIS AVENUE
SOUTH SALT LAKE CITY, UT 84115


LICENSED PROFESSIONAL ENGINEER
4/19/24
No. 5052482
GREGORY S. THOMAS
STATE OF UTAH

PROFESSIONAL STRUCTURAL ENGINEER
No. 2774619
ROBERT C. CONDER
4/18/2024
STATE OF UTAH


FILE NAME: PROJECTS\126 – SOUTH SALT LAKE CITY\42.200 – ZELLER AND DOWNTOWN SEWER IMPROVEMENTS\CAD\2 – DOWNTOWN AND PUMP STATION\G-001 COVER.DWG
FILE DATE: 4.17.2024 11:44:27 (MAJ)
2/02

# INDEX OF DRAWINGS


| SHEET NO. | TITLE |
|---|---|
| | **GENERAL** |
| G–001 | COVER SHEET |
| G–002 | INDEX OF DRAWINGS |
| G–003 | ABBREVIATIONS |
| G–004 | SYMBOLS & LEGEND |
| G–005 | GENERAL NOTES |
| G–101 | SHEET LOCATION MAP & SURVEY CONTROL |
| G–102 | TEST HOLE DATA |
| | **ARCHITECTURAL** |
| A–101 | PUMPHOUSE ELEVATIONS |
| A–201 | SCREEN BUILDING ELEVATIONS |
| A–501 | ARCHITECTURAL SCHEDULES |
| A–502 | DOOR DETAILS I |
| A–503 | DOOR DETAILS II |
| | **CIVIL** |
| C–101 | SITE AND DEMOLITION PLAN |
| C–102 | YARD PIPING PLAN |
| C–103 | GRADING PLAN I |
| C–104 | GRADING PLAN II |
| C–105 | PUMPHOUSE DRY & WET WELL PLAN |
| C–106 | PUMPHOUSE BUILDING FLOOR PLAN |
| C–107 | DRY WELL SECTIONS |
| C–108 | WET WELL SECTIONS |
| C–109 | PUMPHOUSE BUILDING SECTIONS I |
| C–110 | PUMPHOUSE BUILDING SECTIONS II |
| C–111 | PUMPHOUSE PIPE, FITTING & EQUIPMENT SCHEDULE |
| C–201 | SCREEN BUILDING TRENCH PLAN |
| C–202 | SCREEN BUILDING FLOOR PLAN |
| C–203 | SCREEN BUILDING SECTIONS I |
| C–204 | SCREEN BUILDING SECTIONS II |
| C–401 | INTERCONNECT VAULT PLAN & SECTIONS |
| C–402 | ODOR CONTROL UNITS PLAN & SECTIONS |
| C–403 | EXISTING WET WELL PLAN & SECTION |
| C–501 | MISCELLANEOUS DETAILS I |
| C–502 | MISCELLANEOUS DETAILS II |
| C–503 | CHAIN LINK FENCE DETAILS |
| C–504 | CANTILEVER GATE DETAILS |

| SHEET NO. | TITLE |
|---|---|
| | **CIVIL (CONT)** |
| C–701 | SOUTH SALT LAKE STANDARD DETAILS I |
| C–702 | SOUTH SALT LAKE STANDARD DETAILS II |
| C–703 | SOUTH SALT LAKE STANDARD DETAILS III |
| C–801 | MANHOLE DETAILS |
| C–802 | MANHOLE DETAILS |
| C–803 | MANHOLE DETAILS |
| C–804 | MISCELLANEOUS DETAILS I |
| C–805 | MISCELLANEOUS DETAILS II |
| C–806 | MISCELLANEOUS DETAILS III |
| C–901 | BYPASS PUMPING PLAN |
| C–902 | BYPASS PUMPING PLAN |
| C–903 | BYPASS PUMPING PLAN |
| C–904 | BYPASS PUMPING PLAN |
| C–905 | BYPASS PUMPING PLAN |
| C–906 | BYPASS PUMPING PLAN |
| C–907 | BYPASS PUMPING PLAN |
| C–908 | BYPASS PUMPING PLAN |
| C–909 | BYPASS PUMPING PLAN |
| C–910 | BYPASS PUMPING PLAN |
| | **PLAN & PROFILE** |
| PP–101 | STA 1+00 TO STA 6+00 |
| PP–102 | STA 6+00 TO STA 11+00 |
| PP–103 | STA 11+00 TO STA 16+00 |
| PP–104 | STA 16+00 TO STA 21+00 |
| PP–105 | STA 21+00 TO STA 26+00 |
| PP–106 | STA 26+00 TO STA 30+07 |
| PP–201 | WEST TEMPLE STA 22+70 TO STA 27+00 |
| PP–202 | WEST TEMPLE STA 27+00 TO STA 32+00 |
| PP–203 | WEST TEMPLE STA 32+00 TO STA 37+00 |
| PP–204 | WEST TEMPLE STA 37+00 TO STA 41+58 |
| PP–301 | LIFT STATION STORM DRAIN I |
| PP–302 | LIFT STATION STORM DRAIN II |
| PP–303 | LIFT STATION STORM DRAIN III |

| SHEET NO. | TITLE |
|---|---|
| | **STRUCTURAL** |
| S–100 | GENERAL STRUCTURAL NOTES |
| S–101 | SPECIAL INSPECTIONS |
| S–102 | PUMPHOUSE FOUNDATION SLAB PLAN |
| S–103 | PUMPHOUSE FOUNDATION WALL PLAN |
| S–104 | PUMPHOUSE FLOOR SLAB & STEM WALL PLAN |
| S–105 | PUMPHOUSE CMU WALL PLAN |
| S–106 | PUMPHOUSE DRY WELL SECTION |
| S–107 | PUMPHOUSE DRY & WET WELL SECTION |
| S–108 | PUMPHOUSE WET WELL SECTIONS & DETAILS |
| S–109 | PUMPHOUSE ROOFING PLAN |
| S–151 | PUMPHOUSE DRY WELL CRANE PLAN |
| S–152 | PUMPHOUSE DRY WELL CRANE SECTION |
| S–201 | SCREEN BUILDING FOOTING & SLAB PLAN |
| S–202 | SCREEN BUILDING FOUNDATION WALL PLAN |
| S–203 | SCREEN BUILDING GRATING & CAP SLAB PLAN |
| S–204 | SCREEN BUILDING UPPER FLOOR SLAB PLAN |
| S–205 | SCREEN BUILDING CMU WALL PLAN |
| S–206 | SCREEN BUILDING SECTIONS I |
| S–207 | SCREEN BUILDING SECTIONS II |
| S–208 | SCREEN BUILDING ROOFING PLAN |
| S–501 | TYPICAL MASONRY DETAILS |
| S–502 | TYPICAL ROOFING DETAILS I |
| S–503 | TYPICAL ROOFING DETAILS II |
| S–504 | CONCRETE STAIR PLANS & SECTIONS |
| S–505 | CONCRETE COLUMN PLAN & SECTIONS |
| S–506 | TYPICAL GUARDRAIL DETAILS |
| S–507 | MISCELLANEOUS STRUCTURAL DETAILS I |
| S–508 | MISCELLANEOUS STRUCTURAL DETAILS II |
| S–509 | MISCELLANEOUS STRUCTURAL DETAILS III |
| S–510 | MISCELLANEOUS STRUCTURAL DETAILS IV |
| S–511 | MISCELLANEOUS STRUCTURAL DETAILS V |
| | **PLUMBING** |
| P–001 | SCHEDULES |
| P–101 | PUMPHOUSE DRY & WET WELL PLAN |
| P–102 | PUMPHOUSE BUILDING FLOOR PLAN |
| P–201 | SCREEN BUILDING TRENCH PLAN |
| S–501 | DETAILS I |
| S–502 | DETAILS II |

| SHEET NO. | TITLE |
|---|---|
| | **HVAC** |
| H–001 | SCHEDULES AND DETAILS |
| H–100 | DRY PIT PLAN |
| H–101 | TOP FLOOR PLAN |
| H–300 | BUILDING SECTIONS |
| H–501 | DETAILS |
| H–601 | CONTROL DIAGRAMS |
| | **ELECTRICAL** |
| E–01 | SYMBOL LEGEND |
| E–02 | PANEL AND CONDUIT SCHEDULES |
| ES100 | CLASSIFICATION PLANS |
| EP100 | DRY PIT POWER PLAN |
| EP101 | TOP FLOOR POWER PLAN |
| EP102 | DRY PIT GROUNDING PLAN |
| EP103 | TOP FLOOR GROUNDING PLAN |
| EP104 | LIGHTING PROTECTION PLANS |
| EL100 | LOWER LEVEL LIGHTING PLANS |
| EL101 | UPPER FLOOR LIGHTING PLANS |
| E–501 | DETAILS |
| E–502 | DETAILS |
| E–503 | DETAILS |
| E–504 | DETAILS |
| E–505 | DETAILS |
| E–506 | DETAILS |
| E–507 | DETAILS |
| E–508 | DETAILS |
| E–601 | ONE–LINE DIAGRAM |
| E–602 | CONTROL DIAGRAMS |
| E–603 | CONTROL DIAGRAMS |
| I–01 | P & ID SYMBOL LEGEND |
| I–02 | P & ID SYMBOL LEGEND |
| I–100 | DRY PIT CONTROL PLAN |
| I–101 | TOP FLOOR CONTROL PLAN |
| I–301 | ELECTRICAL CONTROL SECTION |
| I–601 | ONE–LINE DIAGRAM |
| I–602 | ONE–LINE DIAGRAM |



LICENSED PROFESSIONAL ENGINEER
4/19/24
No. 5052482
GREGORY S. THOMAS
REGISTERED ENGINEER



HANSEN ALLEN & LUCE, Inc. ENGINEERS

DESIGNED ACS
DRAFTED MAJ
CHECKED GST
DATE APRIL 2024

| NO. | DATE | REVISIONS | BY | APVD. |
|---|---|---|---|---|
| 3 | | | | |
| 2 | | | | |
| 1 | | | | |

SCALE: NONE

SOUTH SALT LAKE

DOWNTOWN SEWER IMPROVEMENTS AND PUMP STATION
GENERAL
INDEX OF DRAWINGS

SHEET G–002
126.42.300

FILE NAME: PROJECTS\126 – SOUTH SALT LAKE CITY\42.200 – ZELLER AND DOWNTOWN SEWER IMPROVEMENTS\CAD\2 – DOWNTOWN AND PUMP STATION\G–002 INDEX OF DRAWINGS.DWG
FILE DATE: 4.8.2024 17:59:27 (MAJ)

7/04

| | |
|---|---|
| @ | AT |
| A | AIR/AMPERE |
| A/C | AIR CONDITIONING |
| A/R | AIR RELEASE |
| AASHTO | AMERICAN ASSOCIATION OF STATE HIGHWAY AND TRANSPORTATION OFFICIALS |
| AB | ANCHOR BOLT |
| ABAN | ABANDON |
| ABND | ABANDONED |
| ABBR | ABBREVIATION |
| AC | ASPHALTIC CONCRETE / ALTERNATING CURRENT |
| ACI | AMERICAN CONCRETE INTERNATIONAL |
| ACOUS | ACOUSTIC / ACOUSTICAL |
| ACP | ASBESTOS CEMENT PIPE / ASPHALTIC CONCRETE PAVEMENT |
| ADD | ADDITIONAL |
| ADH | ADHESIVE |
| ADJ | ADJUSTABLE / ADJACENT |
| AFF | ABOVE FINISHED FLOOR |
| AISC | AMERICAN INSTITUTE OF STEEL CONSTRUCTION |
| ALT | ALTERNATE |
| ALUM | ALUMINUM / ALUM |
| AMB | AMBIENT |
| ANSI | AMERICAN NATIONAL STANDARDS INSTITUTE |
| API | AMERICAN PETROLEUM INSTITUTE |
| APPD | APPROVED |
| APPROX | APPROXIMATE |
| APPURTS | APPURTENANCES |
| APWA | AMERICAN PUBLIC WORKS ASSOCIATION |
| ARV | AIR RELEASE VALVE |
| ARCH | ARCHITECTURE |
| ASME | AMERICAN SOCIETY OF MECHANICAL ENGINEERS |
| ASTM | AMERICAN SOCIETY FOR TESTING AND MATERIALS |
| AT | ACOUSTICAL TILE |
| ATM | ATMOSPHERE |
| AUTO | AUTOMATIC |
| AUX | AUXILIARY |
| AVAR | AIR VACUUM AND AIR RELEASE |
| AVE | AVENUE |
| AWG | AMERICAN WIRE GAGE |
| AWPA | AMERICAN WOOD PRESERVERS ASSOCIATION |
| AWS | AMERICAN WELDING SOCIETY |
| AWWA | AMERICAN WATER WORKS ASSOCIATION |
| B&S | BELL AND SPIGOT |
| B/W | BACK OF WALL / BACK OF WALK |
| BC | BEGIN CURVE / BOLT CIRCLE / BETWEEN CENTERS / BACK OF CURVE |
| BCR | BEGIN CURB RETURN |
| BDRY | BOUNDARY |
| BF | BLIND FLANGE |
| BFP | BACKFLOW PREVENTER |
| BFV | BUTTERFLY VALVE |
| BGS | BELOW GROUND SURFACE |
| BHP | BRAKE HORSEPOWER |
| BLDG | BUILDING |
| BLK | BLACK / BLOCK |
| BLKG | BLOCKING |
| BLVD | BOULEVARD |
| BM | BEAM / BENCHMARK |
| BOA | BLOW-OFF ASSEMBLY |
| BOO | BOTTOM OF OPENING |
| BOP | BOTTOM OF PIPE |
| BOT | BOTTOM |
| BPV | BACK PRESSURE VALVE |
| BRG | BEARING |
| BRK | BRICK / BREAK |
| BSMT | BASEMENT |
| BTU | BRITISH THERMAL UNIT |
| BV | BALL VALVE |
| BVC | BEGIN VERTICAL CURVE |
| BWV | BACK WATER VALVE |
| C | CENTIGRADE / CHANNEL / CEMENT |
| C&G | CURB AND GUTTER |
| CAB | CABINET / CRUSHED AGGREGATE BASE |
| CAP | CAPACITY |
| CATS | CASING TEST STATION |
| CB | CATCH BASIN / CHALKBOARD / CURB |
| CC | CENTER TO CENTER |
| CD | CEILING DIFFUSER |
| CEM | CEMENT |
| CF | CURB FACE / CUBIC FOOT |
| CFH | CUBIC FOOT PER HOUR |
| CFM | CUBIC FOOT PER MINUTE |
| CFS | CUBIC FOOT PER SECOND |
| CHEM | CHEMICAL |
| CHG | CHANGE |
| CHKD | CHECKERED |
| CI | CAST IRON |
| CIP | CAST IRON PIPE / CAST IN PLACE |
| CIPP | CAST IN PLACE PIPE |
| CISP | CAST IRON SOIL PIPE |
| CJ | CONSTRUCTION JOINT |
| CL | CHLORINE GAS / CHLORINATOR / CENTERLINE / CLASS |
| CLF | CHAIN LINK FENCE |
| CLG | CEILING |
| CLR | CLEAR / CLEARANCE |
| CLSM | CONTROLLED LOW STRENGTH MATERIAL |
| CMC | CEMENT MORTAR-COATED |
| CML | CEMENT MORTAR-LINED |
| CML&C | CEMENT MORTAR-LINED AND COATED |
| CMP | CORRUGATED METAL PIPE |
| CMU | CONCRETE MASONRY UNIT |
| CO | CLEANOUT |
| COTG | CLEANOUT TO GRADE |
| COL | COLUMN |
| COMM | COMMUNICATION CABLE |
| COMP | COMPRESSOR |
| CONC | CONCRETE / CONCENTRIC |
| COND | CONDENSER / CONDENSATE |
| CONN | CONNECTION |
| CONST | CONSTRUCT / CONSTRUCTION |
| CONT | CONTINUED / CONTINUOUS |
| CONTR | CONTRACTOR |
| COORD | COORDINATE |
| COR | CORNER |
| CP | COPPER PIPE |
| CPLG | COUPLING |
| CPVC | CHLORINATE POLYVINYL PIPE |
| CSP | CORRUGATED STEEL PIPE |
| CSTS | CURRENT SPAN TEST STATION |
| CT | CERAMIC TILE |
| CTR | CENTER |
| CTS | CORROSION TEST STATION |
| CTSK | COUNTERSINK |
| CU | COPEER / CUBIC |
| CV | CHECK VALVE |
| CY | CUBIC YARD |
| CYL | CYLINDER |
| d | PENNY |
| DAD | DOUBLE ACTING DOOR |
| DB | DIRECT BURY |
| DBL | DOUBLE |
| DC | DIRECT CURRENT |
| DEG | DEGREE |
| DET | DETAIL |
| DF | DRINKING FOUNTAIN / DOUGLAS FIR |
| DG | DOOR GRILL |
| DH | DOUBLE HUNG |
| DI | DUCTILE IRON |
| DIP | DUCTILE IRON PIPE |
| DIA | DIAMETER |
| DIAG | DIAGONAL |
| DIAPH | DIAPHRAGM |
| DIM | DIMENSION |
| DIR | DIRECTION |
| DISCH | DISCHARGE |
| DIST | DISTANCE |
| DL | DEAD LOAD |
| DMH | DROP MANHOLE |
| DMJ | DISMANTLING JOINT |
| DN | DOWN |
| DO | DISSOLVED OXYGEN |
| DR | DOOR / DRAIN |
| DT | DRAIN TILE |
| DWG | DRAWING |
| DWLS | DOWELS |
| DWY | DRIVEWAY |
| E/O | EAST OF |
| EA | EACH |
| EB | EXPANSION BOLT OR ANCHOR |
| EC | END OF CURVE |
| ECC | ECCENTRIC |
| ECR | END CURB RETURN |
| EF | EACH FACE / EXHAUST FAN |
| EFF | EFFLUENT |
| EG | EXISTING GRADE / EDGE OF GUTTER / EXHAUST GRILLE / EXHAUST GAS |
| EGL | ENERGY GRADE LINE |
| EL | ELEVATION |
| ELEC | ELECTRIC / ELECTRONIC |
| EN | EDGE NAILING |
| ENCL | ENCLOSURE |
| ENG | ENGINE |
| ENGR | ENGINEER |
| ENT | ENTRANCE |
| EO | EDGE OF OIL / EMERGENCY OVERFLOW |
| EOP | EDGE OF PAVEMENT |
| EQ | EQUAL |
| EQUIP | EQUIPMENT |
| ES | EACH SIDE |
| ESEW | EMERGENCY SHOWER / EYE WASH |
| ESMT | EASEMENT |
| ETB | EMULSION TREATED BASE |
| ETC | ET CETERA |
| EUH | ELECTRIC UNIT HEATER |
| EVAP | EVAPORATOR |
| EVC | END VERTICAL CURVE |
| EW | EACH WAY / EYE WASH |
| EX | EXISTING |
| EXC | EXCAVATION / EXCAVATE |
| EXH | EXHAUST |
| EX-HY | EXTRA HEAVY |
| EXIST | EXISTING |
| EXP | EXPANSION / EXPOSED |
| EXT | EXTERIOR / EXTENSION |
| EXTR | EXTRUDED |
| F | FAHRENHEIT / FINISH |
| F TO F | FACE TO FACE |
| F&C | FRAME AND COVER |
| F&I | FURNISH AND INSTALL |
| FAB | FABRICATE / FABRICATION / FABRICATED |
| FAI | FRESH AIR INTAKE |
| FB | FLAT BAR / FLOOR BEAM / FIELD BLOCK |
| FC | FLEXIBLE COUPLING |
| FCA | FLANGE COUPLING ADAPTER |
| FCO | FLOOR CLEANOUT |
| FD | FLOOR DRAIN |
| FDR | FEEDER |
| FE | FIRE EXTINGUISHER |
| FEM | FEMALE (PIPE THREAD) |
| FF | FLAT FACE / FAR FACE / FINISH FLOOR |
| FG | FINISH GRADE |
| FH | FIRE HYDRANT / FLAT HEAD |
| FIG | FIGURE |
| FIN | FINISHED |
| FIX | FIXTURE |
| FL | FLOWLINE |
| FLEX | FLEXIBLE |
| FLG | FLANGE / FLOORING |
| FLGD | FLANGED |
| FLR | FLOOR |
| FLSG | FLASHING |
| FM | FACTORY MUTUAL (LAB APPROVED) / FORCE MAIN |
| FMH | FLEXIBLE METAL HOSE |
| FN | FIELD NAIL |
| FND | FOUNDATION |
| FOC | FACE OF CONCRETE / FIBER OPTIC CABLE |
| FOM | FACE OF MASONRY |
| FOS | FACE OF STUDS |
| FOW | FACE OF WALL |
| FPC | FLEXIBLE PIPE COUPLING |
| FPM | FEET PER MINUTE |
| FPS | FEET PER SECOND |
| FPTS | FOREIGN PIPE TEST STATION |
| FR | FRAME |
| FRP | FIBERGLASS REINFORCED PLASTIC |
| FS | FINISHD SURFACE / FAR SIDE / FLOOR SINK / FORGED STEEL |
| FT | FEET / FOOT |
| FTG | FOOTING |
| FUR | FURRING |
| FUT | FUTURE |
| FV | FIELD VERIFY |
| FW | FINISH WATER |
| FWD | FORWARD |
| G | GAS |
| GA | GAGE / GAUGE |
| GAL | GALLON |
| GALV | GALVANIZED |
| GANC | GUT ANCHOR |
| GB | GRADE BREAK |
| GC | GROOVED COUPLING |
| GE | GROOVED END |
| GEN | GENERAL / GENERATOR |
| GFA | GROOVED FLANGE ADAPTOR |
| GI | GALVANIZED IRON |
| GIP | GALVANIZED IRON PIPE |
| GL | GLASS / GROUND LINE / GRADE LINE |
| GLB | GLUE LAMINATED BEAM / GLULAM |
| GLV | GLOBE VALVE |
| GM | GAS METER |
| GP | GUY POLE |
| GPD | GALLONS PER DAY |
| GPH | GALLONS PER HOUR |
| GPM | GALLONS PER MINUTE |
| GR | GRADE / GUARDRAIL |
| GRD | GROUND |
| GRTG | GRATING |
| GSP | GALVANIZED STEEL PIPE |
| GV | GATE VALVE |
| GVL | GRAVEL |
| GYP | GYPSUM |
| H | HIGH / HEIGHT |
| H&V | HEATING AND VENTILATING |
| H/B | HOSE BIBB |
| HC | HOUSE CONNECTION |
| HD | HUB DRAIN |
| HDPE | HIGH-DENSITY POLYETHYLENE PIPE |
| HDR | HEADER |
| HDW | HARDWARE |
| HDWL | HEADWALL |
| HEX | HEXAGONAL |
| HG | MERCURY |
| HGL | HYDRAULIC GRADE LINE |
| HGR | HANGER |
| HM | HOLLOW METAL |
| HORIZ | HORIZONTAL |
| HP | HIGH POINT / HORSEPOWER / HIGH PRESSURE / HIGH PERFORMANCE |
| HPG | HIGH PRESSURE GAS |
| HR | HEAT RETURN / HOUR / HANDRAIL |
| HSL | HORIZONTALLY SLOTTED |
| HSS | HOLLOW STRUCTURAL SECTION |
| HTG | HEATING |
| HTR | HEATER |
| HV | HORIZONTAL AND VERTICAL CONTROL POINT |
| HVAC | HEATING, VENTILATION AND AIR CONDITIONING |
| HW | HOT WATER / HEADWORK |
| HWD | HARDWOOD |
| HWL | HIGH WATER LEVEL |
| HWO | HANDWHEEL OPERATED |
| HYD | HYDRAULIC / HYDRANT |
| I/O | INPUT/OUTPUT |
| I&C | INSTRUMENTATION & CONTROL |
| I&O | INSIDE AND OUTSIDE |
| IBC | INTERNATIONAL BUILDING CODE |
| ID | INSIDE DIAMETER |
| IE | INVERT ELEVATION |
| IF | INSIDE FACE |
| IJTS | INSULATING JOINT TEST STATION |
| IN | INCH |
| INCL | INCLUDE / INCLUDING |
| INF | INFLUENT |
| INSL | INSULATION / INSULATING / INSULATED |
| INSP | INSPECTION |
| INST | INSTRUMENT |
| INT | INTERIOR |
| INV | INVERT |
| IP | IRON PIPE |
| IPS | IRON PIPE SIZE |
| IRRIG | IRRIGATION |
| JAN | JANITOR |
| JC | JUNCTION CHAMBER |
| JCT | JUNCTION |
| JS | JUNCTION STRUCTURE |
| JSTS | JOISTS |
| JT | JOINT |
| k | KILO |
| K | KELVIN / KARAT |
| kg | KILOGRAM |
| KIP | THOUSAND POUNDS |
| km | KILOMETER |
| kV | KILOVOLT |
| KVA | KILOVOLT AMPHERE |
| kW | KILOWATT |
| kWh | KILOWATT HOUR |
| L | LETTER / LENGTH / ANGLE |
| LAB | LABORATORY |
| LAM | LAMINATED |
| LAT | LATERAL |
| LAV | LAVATORY |
| LB | POUND |
| LCP | LOCAL CONTROL PANEL |
| LCS | LOCAL CONTROL STATION |
| LD | LOCAL DEPRESSION |
| LDG | LANDING |
| LF | LINEAR FOOT |
| LG | LENGTH / LONG |
| LH | LAMP HOLE / LEFT HAND |
| LL | LIVE LOAD |
| LLH | LONG LEG HORIZONTAL |
| LLV | LONG LEG VERTICAL |
| LOC | LOCATION |
| LOL | LAYOUT LINE |
| LONG | LONGITUDINAL |
| LP | LOW POINT / LOW PRESSURE / LAMP POST |
| LPG | LIQUID PETROLEUM GAS |
| LT | LEFT / LIGHT |
| LW | LOW WATER |
| LWL | LOW WATER LEVEL |
| LWR | LOWER |
| m | METER |
| M | MALE (PIPE THREAD) |
| mA | MILLIAMPS |
| MACH | MACHINE |
| MAG | MAGNETIC |
| MAINT | MAINTENANCE |
| MAN | MANUAL |
| MAS | MASONRY |
| MAT | MATERIAL |
| MAX | MAXIMUM |
| MB | MAILBOX / MACHINE BOLT |
| MCC | MOTOR CONTROL CENTER |
| MCJ | MASONRY CONTROL JOINT |
| MCR | MIDDLE OF CURB RETURN |
| MEAS | MEASURE |
| MECH | MECHANICAL |
| MED | MEDIUM |
| MEM | MEMBER |
| MFR | MANUFACTURER |
| MFRD | MANUFACTURED |
| MG | MILLION GALLON |
| MGD | MILLION GALLON PER DAY |
| MH | MANHOLE / MAINTENANCE HOLE |
| MHW | MEAN HIGH WATER |
| MI | MALLEABLE IRON / MILE |
| MICRON | 1/1,000,000 METER |
| MIL | MILITARY / 1/1,000TH INCH |
| MIN | MINIMUM / MINUTE |
| MIR | MIRROR |
| MISC | MISCELLANEOUS |
| MJ | MECHANICAL JOINT |
| MK | MARK |
| MLW | MEAN LOW WATER |
| mm | MILLIMETER |
| MO | MOTOR OPERATED / MASONRY OPENING |
| MOD | MODEL |
| MON | MONUMENT |
| MOR | MORTAR |
| MSL | MEAN SEA LEVEL |
| MTC | MECHANICAL-TYPE COUPLING |
| MTD | MOUNTED |
| MTG | MOUNTING |
| MTL | METAL / MATERIAL |
| MTR | MOTOR |
| MWS | MAXIMUM WATER SURFACE |
| N | NORTH |
| NaOCL | SODIUM HYPOCHLORITE |
| NaOH | SODIUM HYDROXIDE (CAUSTIC SODA) |
| NC | NORMALLY CLOSED |
| NEC | NATIONAL ELECTRIC CODE |
| NEMA | NATIONAL ELECTRICAL MANUFACTURERS ASSOCIATION |
| NF | NEAR FACE |
| NFPA | NATIONAL FIRE PROTECTION ASSOCIATION |
| NG | NATURAL GRADE / NATURAL GAS |
| NIC | NOT IN CONTRACT |
| NO | NUMBER / NORMALLY OPEN |
| NOM | NOMINAL |
| NPS | NOMINAL PIPE SIZE |
| NPT | NATIONAL PIPE THREAD |
| NPW | NON-POTABLE WATER |
| NRCP | NON-REINFORCED CONCRETE PIPE |
| NRS | NON-RISING STEM |
| NS | NEAR SIDE |
| NTS | NOT TO SCALE |
| NW | NORTHWEST |
| OBJ | OBJECT |
| OC | ON CENTER / OVER-CROSSING |
| OD | OUTSIDE DIAMETER / OVERALL DIMENSION |
| OE | OUTER EDGE |
| OF | OVERFLOW / OUTSIDE FACE |
| OFD | OVERFLOW DRAIN |
| OG | ORIGINAL GROUND |
| OH | OVERHEAD |
| OHP | OVERHEAD POWER LINE |
| OHW | OVERHEAD POWER WIRE |
| OPER | OPERATOR / OPERATING |
| OPNG | OPENING |
| OPP | OPPOSITE |
| ORIG | ORIGINAL |
| OS&Y | OUTSIDE SCREW AND YOKE |
| OSA | OUTSIDE AIR |
| OSHA | OCCUPATIONAL SAFETY AND HEALT ADMINISTRATION |
| OWG | OIL, WATER, GAS |
| OZ | OUNCE |
| P | POLE / PAGE / PIPE |
| P/S | POLE AND SHELF |
| PA | PLANTING AREA |
| PART | PARTITION |
| PAVMT | PAVEMENT |
| PB | POLYBUTYLENE / PULL BOX |
| PC | POINT OF CURVATURE / PORTLAND CEMENT |
| PCC | PORTLAND CEMENT CONCRETE / POINT OF COMPOUND CURVE |
| PCOTG | PRESSURE CLEANOUT TO GRADE |
| PCVC | POINT OF COMPOUND VERTICAL CURVE |
| PE | POLYETHYLENE / PLAIN END / PLANT EFFLUENT |
| PG | PRESSURE GAGE |
| pH | HYDROGEN ION CONCENTRATION |
| PI | PLANT INFLUENT / POINT OF INTERSECTION |
| PK | PARKING |
| PL | PLATE / PROPERTY LINE /PLACE |
| PLAS | PLASTER / PLASTIC |
| PLT | PLANT |
| PLWD | PLYWOOD |
| PM | PRESSED METAL |
| PNEU | PNEUMATIC |
| PNL | PANEL |
| POB | POINT OF BEGINNING |
| POC | POINT OF CONNECTION |
| POT | POINT OF TANGENT |
| PP | POWER POLE / POLYPROPYLENE |
| PPD | POUNDS PER DAY |
| PPH | POUNDS PER HOUR |
| PPM | POUNDS PER MINUTE / PARTS PER MILLION |
| PR | PAIR |
| PRC | POINT OF REVERSE CURVE |
| PRCT | PRECAST |
| PREFAB | PREFABRICATED |
| PRESS | PRESSURE |
| PROF | PROFILE |
| PROP | PROPERTY |
| PRV | PRESSURE REGULATING, RELIEF, OR REDUCING VALVE |
| PRVC | POINT OF REVERSE VERTICAL CURVE |
| PS | PRESSURE SWITCH / PUMP STATION |
| PSF | POUNDS PER SQUARE FOOT |
| PSI | POUNDS PER SQUARE INCH |
| PSIA | POUNDS PER SQUARE INCH ABSOLUTE |
| PSIG | POUNDS PER SQUARE INCH GAUGE |
| PSV | PRESSURE SUSTAINING VALVE |
| PT | POINT OF TANGENCY / PAINT |
| PTFE | POLYTETRAFLUOROETHYLENE (TEFLON) |
| PV | PLUG VALVE |
| PVC | POLYVINYL CHLORIDE |
| PVDF | POLYVINYLIDENE FLUORIDE (KYNAR) |
| PW | POTABLE WATER |
| QTY | QUANTITY |
| QUAD | QUADRANGLE / QUADRANT |
| R | RADIUS / RISER / RATE OF SLOPE |
| R/W | RIGHT-OF-WAY |
| RAC | RECYCLED ASPHALT CONCRETE |
| RAG | RETURN AIR GRILLE |
| RAP | RECYLCED ASPHALT PAVEMENT |
| RC | REINFORCED CONCRETE |
| RCP | REINFORCED CONCRETE PIPE |
| RD | ROAD / ROOF DRAIN / ROUND |
| RED | REDUCER / REDUCING |
| REF | REFERENCE / REFER / REFRIGERATOR |
| REG | REGULATING |
| REINF | REINFORCE / REINFORCED |
| REQD | REQUIRED |
| RESIL | RESILIENT |
| RET | RETAINING / RETURN |
| REV | REVISION |
| REW | RECLAIMED WATER |
| RF | ROOF / RAISED FOUNDATION / ROUGH FACE |
| RFG | ROOFING |
| RGE | REGISTERED GEOTECHNICAL ENGINEER |
| RH | REDHEAD / RIGHT HAND |
| RL | RIDGE LINE |
| RM | ROOM |
| RMP | ROCKY MOUNTAIN POWER |
| RO | ROUGH OPENING / REVERSE OSMOSIS |
| RP | RADIUS POINT |
| RPM | REVOLUTIONS PER MINUTE |
| RR | RAILROAD |
| R/R | REMOVE AND REPLACE |
| RS | RISING STEM |
| RT | RIGHT |
| RTU | REMOTE TERMINAL UNIT |
| RW | REDWOOD |
| RWL | RAINWATER LEADER |
| S | SOUTH / SINK / SECOND / SLOPE / SLIP / SOCKET |
| S/O | SOUTH OF |
| SA | SAMPLE |
| SAN | SANITARY |
| SBR | STYRENE BUTADIENE (RUBBER) |
| SCCP | STEEL CYLINDER CONCRETE PIPE |
| SCR | SCREWED |
| SCFM | STANDARD CUBIC FEET PER MINUTE |
| SCH | SCHEDULE |
| SD | SANITARY DRAIN AND VENT / SMOKE DETECTOR |
| SDR | STANDARD THERMOPLASTIC PIPE DIMENSION RATIO / STORM DRAIN |
| SEC | SECONDARY / SECTION |
| SF | SQUARE FOOT (FEET) |
| SH | SHOWER |
| SHT | SHEET |
| SHTG | SHEATHING |
| SIM | SIMILAR |
| SLDG | SLIDING |
| SLG | SLUICE GATE |
| SOG | SLAB ON GRADE |
| SOL | SOLUTION |
| SP | STATIC PRESSURE |
| SPD | SUMP PUMP DRAIN |
| SPEC | SPECIFICATION |
| SQ | SQUARE |
| SQ IN | SQUARE INCH |
| SS | STAINLESS STEEL / SANITARY SEWER / SERVICE SINK |
| SSB | SELECT SUB-BASE |
| SSPWC | STANDARD SPECIFICATION FOR PUBLIC WORKS CONSTRUCTION |
| ST | STREET / STATE |
| STA | STATION |
| STC | SLEEVE-TYPE COUPLING |
| STD | STANDARD |
| STK | STAKE |
| STL | STEEL |
| STM | STEAM |
| STN | STAINLESS |
| STR | STRAIGHT / STRUCTURAL |
| STRUCT | STRUCTURE |
| SUBFL | SUB-FLOOR |
| SUCT | SUCTION |
| SUSP | SUSPEND / SUSPENDED |
| SV | SOLENOID VALVE |
| SW | SIDEWALK / SOUTHWEST |
| SWGR | SWITCHGEAR |
| SWR | SIDEWALL REGISTER |
| SY | SQUARE YARD |
| SYM | SYMMETRICAL / SYMBOL |
| T | THERMOSTAT / TREAD OF STAIR / TANGENT |
| T&B | TOP AND BOTTOM |
| T&G | TONGUE AND GROOVE |
| TAN | TANGENT |
| TBC | TOP BACK OF CURB |
| TBE | THREAD BOTH ENDS |
| TBG | TUBING |
| TBM | TEMPORARY BENCH MARK |
| TCE | TEMPORARY CONSTRUCTION EASEMENT |
| TCV | TEMPERATURE CONTROL VALVE |
| TDH | TOTAL DYNAMIC HEAD |
| TECH | TECHNICAL |
| TEL | TELEPHONE |
| TEMP | TEMPERATURE / TEMPORARY |
| TF | TOP OF FOOTING |
| TH | TEST HOLE |
| THK | THICK / THICKNESS |
| THR | THRESHOLD |
| THRD | THREADED |
| TK | TANK / TACK |
| TL | TRAVERSE LINE |
| TOB | TOP OF BAFFLE |
| TOC | TOP OF CONCRETE |
| TOE | THREAD ONE END |
| TOG | TOP OF GRATING / TOP OF GATE |
| TOM | TOP OF MASONRY |
| TOP | TOP OF PIPE |
| TOPO | TOPOGRAPHIC |
| TOS | TOP OF STEEL / TOP OF SLAB |
| TOW | TOP OF WALL |
| TP | TELEPHONE POLE / TURNING POINT / TEST PIT |
| TRANS | TRANSMITTER / TRANSITION / TRANSMISSION |
| TS | TRAFFIC SIGNAL |
| TV | THERMOSTATIC VALVE |
| TW | THERMOMETER WELL / TRAVELED WAY |
| TWS | TRACER WIRE STATION |
| TYP | TYPICAL |
| UB | UNION BONNET |
| UBC | UNIFORM BUILDING CODE / UNTREATED BASE COURSE |
| UC | UNDER-CROSSING |
| UCE | UTILITY CORRIDOR EASEMENT |
| UDOT | UTAH DEPARTMENT OF TRANSPORTATION |
| UG | UNDERGROUND |
| UGC | UNDERGROUND CONDUIT |
| UH | UNIT HEATER |
| UL | UNDERWRITERS LABORATORIES |
| UNID | UNIDENTIFIED |
| UNK | UNKNOWN |
| UNO | UNLESS NOTED OTHERWISE |
| UOI | UNLESS OTHERWISE INDICATED |
| UPS | UNINTERRUPTABLE POWER SUPPLY |
| USA | UNDERGROUND SERVICE ALERT |
| USGS | UNITED STATES GEOLOGICAL SURVEY |
| UW | UTILITY WATER |
| V | VALVE / VERTICAL / VENT / VOLT |
| VAC | VACUUM |
| VAR | VARIES / VARIABLE |
| VB | VALVE BOX |
| VC | VERTICAL CURVE |
| VCP | VITRIFIED CLAY PIPE |
| VERT | VERTICAL |
| VOL | VOLUME |
| VPI | VERTICAL POINT OF INTERSECTION |
| VSL | VERTICALLY SLOTTED |
| VTR | VENT THRU ROOF |
| VWM | VERIFY WITH MANUFACTURER |
| W | WEST / WASTE / WIDTH / WIDE FLANGE / WATER |
| W/ | WITH |
| W/O | WEST OF / WITHOUT |
| WC | WATER COLUMN / WATER CLOSET |
| WCO | WALL CLEANOUT |
| WD | WOOD |
| WDW | WINDOW |
| WH | WATER HEATER |
| WI | WROUGHT IRON |
| WM | WATER METER |
| WOG | WATER, OIL, OR GAS |
| WP | WATERPROOFING / WORKING PRESSURE |
| WPJ | WEAKEN PLANE JOINT |
| WS | WATER SURFACE |
| WSP | WELDED STEEL PIPE |
| WSTP | WATERSTOP |
| WT | WEIGHT / WATER TIGHT |
| WWF | WELDED WIRE FABRIC |
| WWP | WORKING WATER PRESSURE |
| XCONN | CROSS CONNECTION |
| XS | EXTRA STRONG |
| XSEC | CROSS SECTION |
| XXS | DOUBLE EXTRA STRONG |
| YD | YARD |
| YR | YEAR |
| Z | ZERO / ZONE |

## PROJECT ABBREVIATIONS

| | |
|---|---|
| CPP | CORRUGATED PLASTIC PIPE |
| GFRP | GLASS FIBER REINFORCED PIPE |

FILE NAME: PROJECTS\126 - SOUTH SALT LAKE CITY\42.200 - ZELLER AND DOWNTOWN SEWER IMPROVEMENTS\CAD\2 - DOWNTOWN AND PUMP STATION\G-003 ABBREVIATIONS.DWG
FILE DATE: 3.6.2024 11:55:32 (MAJ)

LICENSED PROFESSIONAL ENGINEER
4/19/24
No. 5052482
GREGORY S. THOMAS
STATE OF UTAH

HANSEN ALLEN & LUCE inc
ENGINEERS

| | | | | | |
|---|---|---|---|---|---|
| DESIGNED | ACS | 3 | | | |
| DRAFTED | MAJ | 2 | | | |
| CHECKED | GST | 1 | | | |
| DATE | APRIL 2024 | NO. | DATE | REVISIONS | BY / APVD. |

SCALE: NONE

SOUTH SALT LAKE

DOWNTOWN SEWER IMPROVEMENTS AND PUMP STATION
GENERAL
ABBREVIATIONS

SHEET G-003
126.42.300

7/04

# DETAIL, SECTION & ELEVATION IDENTIFICATION

NOTES:

1. IF SECTION CUT AND SECTION OR DETAIL CALL–OUT AND DETAIL ARE SHOWN ON SAME DRAWING, DRAWING NUMBER IS REPLACED BY A LINE.
2. DETAIL LETTERS "I" AND "O" NOT USED.

## DETAIL IDENTIFICATION

DETAIL CALL–OUT ON SHEET C–1:

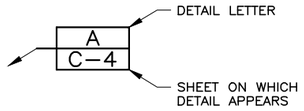


ON SHEET C–4, THIS DETAIL IS IDENTIFIED AS:

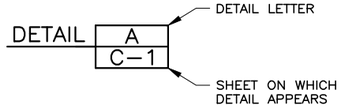


## SECTION IDENTIFICATION

SECTION CUT ON SHEET C–1:

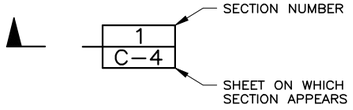


ON SHEET C–4, THIS SECTION IS IDENTIFIED AS:

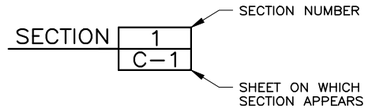


## ELEVATION IDENTIFICATION

ELEVATION CALL–OUT ON SHEET C–6:

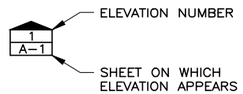


ON SHEET A–1, THIS ELEVATION IS IDENTIFIED AS:

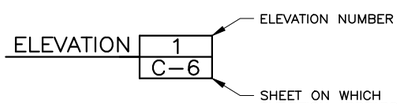


# LEGEND

## EXISTING

- 4-G — EXISTING GAS LINE W/ SIZE
- GS — GS — GS — EXISTING GAS SERVICE
- 10-W — EXISTING WATER LINE W/ SIZE
- WS — WS — WS — EXISTING WATER SERVICE
- 15-SS — EXISTING SANITARY SEWER W/ SIZE
- SL — SL — SL — EXISTING SANITARY SEWER LATERAL
- 24-SD — EXISTING STORM DRAIN W/ SIZE
- 12-IRR — EXISTING IRRIGATION W/ SIZE
- FO-UG — EXISTING FIBER OPTIC LINE
- T-UG — EXISTING UNDERGROUND TELEPHONE
- EXISTING CABLE TV
- P-UG — EXISTING UNDERGROUND POWER LINE
- P-OH — EXISTING OVERHEAD POWER LINE
- X — EXISTING FENCE LINE
- EXISTING RAILROAD TRACKS
- EXISTING PROPERTY LINE
- R O W — EXISTING RIGHT–OF–WAY
- EXISTING ASPHALT
- 4200 — EXISTING MAJOR CONTOUR
- EXISTING MINOR CONTOUR

- EXISTING FIRE HYDRANT
- EXISTING POWER POLE
- EXISTING POWER / LIGHT POLE COMBO
- EXISTING LIGHT POLE
- EXISTING GUY WIRE
- P — EXISTING POWER BOX
- EM — EXISTING POWER METER
- T — EXISTING TELEPHONE
- F — EXISTING FIBER OPTIC
- EXISTING CABLE
- EXISTING SIGNAL POLE
- EXISTING SIGNAL / LIGHT POLE COMBO
- EXISTING SIGNAL BOX
- EXISTING TRAFFIC LOOP
- EXISTING TRAFFIC BOX
- EXISTING IRRIGATION BOX
- EXISTING SIGN
- EXISTING TREE

- SS — EXISTING SANITARY SEWER MANHOLE
- SD — EXISTING STORM DRAIN MANHOLE
- W — EXISTING WATER MANHOLE
- G — EXISTING GAS MANHOLE
- P — EXISTING POWER MANHOLE
- T — EXISTING TELEPHONE MANHOLE
- F — EXISTING FIBER OPTICS MANHOLE
- IRR — EXISTING IRRIGATION MANHOLE
- WM — EXISTING WATER METER
- EXISTING VALVES
- EXISTING REDUCERS
- EXISTING SD CATCH BASIN
- EXISTING SD CATCH BASIN / JUNCTION BOX
- EXISTING SD JUNCTION BOX
- SD — EXISTING SD CLEANOUT BOX
- SD — EXISTING SD COMBO CATCH BASIN / CLEANOUT BOX

## NEW

- 4200 — PROPOSED MAJOR CONTOUR
- PROPOSED MINOR CONTOUR
- NEW PROPERTY LINE
- NEW UTILITY LINE
- P/E — PERMANENT EASEMENT
- C/E — CONSTRUCTION EASEMENT
- R — RIDGE LINE
- GB — GRADE BREAK
- FLOW LINE
- RETAINING WALL
- NEW FENCE

- NEW INLET BOX
- NEW CAP
- NEW FIRE HYDRANT
- NEW WATER VALVE
- NEW GATE VALVE
- NEW BUTTERFLY VALVE
- NEW PLUG VALVE
- NEW LIGHT POLE

## HATCHING

- CONCRETE (PLAN)
- CONCRETE (SECTION)
- GROUT
- BRICK (PLAN)
- CMU (PLAN)
- CMU (SECTION)
- STEEL (SECTION)
- DEMOLITION
- GRATING
- EARTH
- AGGREGATE
- GRAVEL
- RIPRAP
- SAND
- ASPHALT

## CONTROL SYMBOLS

- BM–## — EXISTING BENCH MARK
- EXISTING HORIZONTAL CONTROL POINT
- EXISTING VERTICAL CONTROL POINT
- EXISTING HORIZONTAL & VERTICAL CONTROL POINT
- EXISTING SURVEY MONUMENT
- EXISTING SECTION MONUMENT

NOTE:
SURVEY OF EXISTING RING & COVER IS FROM CENTER OF THE COVER.

## MISCELLANEOUS

- 104 — ROOM NUMBER
- 101 — DOOR NUMBER
- W1 — WINDOW NUMBER
- M–1 — METER SCHEDULE
- P–1 — PUMP SCHEDULE
- V–1 — VALVE SCHEDULE
- FE–X — NEW FIRE EXTINGUISHER TYPE (1, 2, 3, OR 4)
- CTS–1 — CATHODIC TEST STATION
- 4 — FITTING SCHEDULE
- 6 — KEY NOTES
- A — COORDINATE POINT
- ø — DIAMETER
- ∠ — ANGLE
- ℄ — CENTERLINE

LICENSED PROFESSIONAL ENGINEER
4/19/24
No. 5052482
GREGORY S. TWEEDY
STATE OF UTAH

| | | | | | | | |
|---|---|---|---|---|---|---|---|
| DESIGNED | ACS | 3 | | | | | |
| DRAFTED | MAJ | 2 | | | | | |
| CHECKED | GST | 1 | | | | | |
| DATE | APRIL 2024 | NO. | DATE | REVISIONS | | BY | APVD. |

SCALE: NONE

SOUTH SALT LAKE

DOWNTOWN SEWER IMPROVEMENTS AND PUMP STATION
GENERAL
SYMBOLS & LEGEND

SHEET G–004
126.42.300

FILE NAME: PROJECTS\126 – SOUTH SALT LAKE CITY\42.200 – ZELLER AND DOWNTOWN SEWER IMPROVEMENTS\CAD\2 – DOWNTOWN AND PUMP STATION\G–004 SYMBOLS & LEGEND.DWG
FILE DATE: 3.6.2024 11:54:36 (MAJ)

7/04

## GENERAL NOTES

1. THESE DRAWINGS REFERENCE THE APWA STANDARD 2017 SPECIFICATIONS AND PLANS AS PUBLISHED BY UTAH T2 CENTER (435) 797–2931. WHEN REFERENCE IS MADE TO THE "STANDARD SPECIFICATIONS" THEY REFER TO THE APWA MANUAL OF STANDARD SPECIFICATIONS 2017 EDITION, WITH THE EXCEPTIONS PUBLISHED BY THE CITY OF SOUTH SALT LAKE, OR AS MODIFIED HEREIN. THE SPECIFICATIONS IN THE PROJECT MANUAL WILL GOVERN EXCEPT WHERE APWA STANDARDS ARE SPECIFIED. CONTRACTOR SHALL BE REQUIRED TO PURCHASE SUFFICIENT COPIES OF THE STANDARD SPECIFICATIONS TO BE UTILIZED AND REFERENCED FOR CONSTRUCTION. SAID STANDARD SPECIFICATIONS SHALL BE CONSIDERED PART OF THE PROJECT CONTRACT DOCUMENTS.
2. CONTRACTOR SHALL MEET ALL UTAH STATE DEPARTMENT OF ENVIRONMENTAL QUALITY AND U.S. EPA REQUIREMENTS WITH RESPECT TO THEIR RULES AND REGULATIONS.
3. STATIONING, CURVE DATA, AND STRAIGHT SECTIONS LISTED ARE GROUND DISTANCES. HORIZONTAL AND VERTICAL CONTROL IS BASED ON NAD 83, STATE PLANE, UTAH CENTRAL COORDINATE SYSTEM.
4. CONSTRUCTION OPERATIONS SHALL BE CONDUCTED, AND SIGNS, BARRICADES, AND FLASHERS SHALL BE PLACED, SO AS TO COMPLY WITH OSHA, UTAH STATE INDUSTRIAL COMMISSION, LOCAL SAFETY STANDARDS, AND MANUAL ON UNIFORM TRAFFIC CONTROL DEVICES.
5. CONTRACTOR SHALL BE RESPONSIBLE FOR LOCATING ALL UNDERGROUND UTILITIES, INCLUDING WATER LINES, STORM DRAIN LINES, TELEPHONE CABLES, GAS LINES, AND ANY OTHER OBSTRUCTION DURING THE COURSE OF CONSTRUCTION AND INSTALLATION OF THE PIPELINES. SAID UTILITIES SHALL BE RESTORED TO A CONDITION AT LEAST EQUAL TO THEIR ORIGINAL CONDITION.
6. CONTRACTOR SHALL BE RESPONSIBLE TO OBTAIN RIGHT OF INGRESS AND EGRESS SHOULD THEY VENTURE ONTO PRIVATE PROPERTY WHICH IS NOT INCLUDED IN CITY ACQUIRED RIGHTS–OF–WAY AND EASEMENTS.
7. UNLESS DETAILED, SPECIFIED, OR INDICATED OTHERWISE, CONSTRUCTION SHALL BE AS INDICATED IN THE APPLICABLE TYPICAL DETAILS AND GENERAL NOTES. TYPICAL DETAILS ARE MEANT TO APPLY EVEN THOUGH NOT REFERENCED AT SPECIFIC LOCATIONS OR IN SPECIFIC DRAWINGS.
8. CONTRACTOR SHALL BE RESPONSIBLE TO PROTECT ALL EXISTING IMPROVEMENTS DURING CONSTRUCTION AND SHALL REPLACE OR RESTORE ANY IMPROVEMENTS DAMAGED AS A RESULT OF THE CONSTRUCTION ACTIVITY AS DIRECTED BY THE ENGINEER.
9. THIS PROJECT IS LOCATED WITHIN CITY OF SOUTH SALT LAKE LIMITS AND UTA ROW. CONTRACTOR SHALL OBTAIN ALL APPLICABLE PERMITS AND APPROVALS FROM UTA AND SOUTH SALT LAKE AND SHALL COMPLY WITH SOUTH SALT LAKE AND UTA REGULATIONS FOR TRAFFIC CONTROL, SAFETY, EXCAVATION AND BACKFILL IN CITY AND UTA RIGHTS–OF–WAY, ETC.
10. RIGHT–OF–WAY LINES SHOWN ARE OBTAINED FROM MAPS FROM SALT LAKE COUNTY GIS PORTAL.
11. NO TITLE WORK WAS PERFORMED FOR USE IN THE PREPARATION OF THIS SURVEY. FOR BUILDING LINES, EASEMENTS OR RESTRICTIONS NOT SHOWN HEREON, REFER TO DEEDS, ABSTRACTS, TITLE POLICIES, SEARCHES OR COMMITMENTS, CONTRACTS AND LOCAL BUILDING AND ZONING ORDINANCES.

## PROPERTY OWNER PROJECT NOTES

1. TRUCO SERVICES, 2225 S 400 W, SOUTH SALT LAKE, UT 84115, BRIAN BORLACE, 801–376–5509: CONTRACTOR SHALL INSTALL TEMPORARY CONSTRUCTION FENCING ALONG NORTHERN LIMITS OF TEMPORARY CONSTRUCTION EASEMENT. TEMPORARY CONSTRUCTION FENCING SHALL BE PERMANENT IN NATURE AS PER APWA PLAN 831. TEMPORARY CONSTRUCTION FENCING SHALL BE REMOVED AND SURFACE RESTORED ONCE CONSTRUCTION IS COMPLETE AND PERMANENT FENCING IS RESTORED.
2. MIDWEST MOTOR EXPRESS, 2200 SOUTH 400 WEST, SOUTH SALT LAKE, UT 84115, 801–485–1444: CONTRACTOR SHALL INSTALL TEMPORARY CONSTRUCTION FENCING ALONG NORTHERN LIMITS OF TEMPORARY CONSTRUCTION EASEMENT. TEMPORARY CONSTRUCTION FENCING SHALL BE PERMANENT IN NATURE AS PER APWA PLAN 831. TEMPORARY CONSTRUCTION FENCING SHALL BE REMOVED AND SURFACE RESTORED ONCE CONSTRUCTION IS COMPLETE AND PERMANENT FENCING IS RESTORED.

## SOUTH SALT LAKE CITY TRAFFIC CONTROL PROJECT NOTES

1. PRIOR TO CONSTRUCTION, CONTRACTOR SHALL SUBMIT TO SOUTH SALT LAKE TRAFFIC CONTROL PLANS WHEN SUBMITTING RIGHT–OF–WAY ENCROACHMENT PERMIT. TRAFFIC CONTROL PLANS SHALL DETAIL LANE CLOSURES, FLAGGING OPERATIONS, AND REROUTING TRAFFIC INCLUDING BICYCLE AND PEDESTRIAN TRAFFIC.
2. ACCESS TO RESIDENTIAL STREETS, DRIVEWAYS, AND BUSINESS ACCESS IS TO BE MAINTAINED THROUGHOUT CONSTRUCTION UNLESS NOTED OTHERWISE.
3. WEST TEMPLE, UTOPIA AVENUE, 300 WEST, AND 600 WEST: CONTRACTOR SHALL MAINTAIN A MINIMUM OF TWO LANES OF TRAFFIC, ONE IN EACH DIRECTION AT ALL TIMES. IN THE EVENT THAT TWO LANES OF TRAFFIC CANNOT BE MAINTAINED, ONE LANE OF TRAFFIC WITH FLAGGING OPERATIONS IS ACCEPTABLE DURING ACTIVE CONSTRUCTION BUT SHALL BE RESTORED TO A MINIMUM OF TWO LANES OF TRAFFIC WHEN CONSTRUCTION IS NOT OCCURRING. CONTRACTOR SHALL PROVIDE A MINIMUM OF 72 HOURS NOTICE PRIOR TO CLOSURES.
4. ANDY AVENUE – 300 WEST TO 400 WEST: CONTRACTOR IS ALLOWED TO CLOSE ANDY AVENUE BETWEEN 300 WEST AND 400 WEST TO ALL TRAFFIC DURING CONSTRUCTION FOR A TIME PERIOD NOT TO EXCEED 7 CALENDAR DAYS. NIGHT WORK ALONG ANDY AVENUE BETWEEN 300 WEST AND 400 WEST IS ACCEPTABLE WITH PROPER SALT LAKE COUNTY APPROVALS. CONTRACTOR SHALL COORDINATE WITH HILTI (2180 SOUTH 300 WEST #105, AMBER HICKS, 480–259–1458) FOR DELIVERIES DURING ROADWAY CLOSURE.

## SANITARY SEWER PROJECT NOTES

1. LOCATION OF EXISTING SANITARY SEWER LATERALS ARE APPROXIMATE. CONTRACTOR SHALL FIELD VERIFY LOCATION AND ELEVATION PRIOR TO CONSTRUCTION. LATERALS SHALL BE EXTENDED TO THE NEW SEWER LINE MAINTAINING LINE AND GRADE. CONTRACTOR SHALL IMMEDIATELY NOTIFY CITY IF LATERALS ARE FOUND THAT CANNOT BE CONNECTED TO THE NEW SEWER MAINTAINING EXISTING LINE AND GRADE.
2. RECORDS INDICATE THAT MORE THAN ONE SANITARY SEWER LATERAL MAY BE PRESENT AT SOME SEWER CONNECTIONS. CONTRACTOR SHALL FIELD VERIFY SANITARY SEWER LATERAL IS ACTIVE PRIOR TO RECONNECTING TO NEW SANITARY SEWER TRUNK LINE. COORDINATE WITH CITY PERSONNEL WHEN LATERALS ARE FOUND THAT ARE NOT ACTIVE.
3. SANITARY SEWER MANHOLES SHALL BE ABANDONED BY REMOVING THE GRATE, FRAME, RISERS, CONE, AND RISER SECTIONS TO THE BOTTOM SECTION.
4. SANITARY SEWER PIPES TO BE ABANDONED SHALL BE REMOVED A MINIMUM OF 5 FEET FROM NEW SEWER PIPELINE AND FILLED WITH CONCRETE SLURRY OR SAND SLURRY AND CAP OPEN ENDS WITH CONCRETE AT LEAST 24 INCHES.
5. MAXIMUM MEASURED SANITARY SEWER FLOWS ARE:
   a. DOWNTOWN; UTOPIA AVE TO MAIN WASTEWATER LIFT STATION: 3,900 GPM
6. FLOW CONTROL
   a. CONTRACTOR SHALL PROVIDE BYPASS OF FLOW OF SEWAGE AROUND SECTIONS OF PIPE TO BE INSTALLED OR REMOVED.
   b. CONTRACTOR SHALL PROVIDE MEANS AND EQUIPMENT (BYPASS PUMPING PLAN) FOR FLOW CONTROL OR PUMPING DURING CONSTRUCTION. BYPASS PUMPING PLAN SHALL BE SUBMITTED AT LEAST 14 CALENDAR DAYS PRIOR TO BYPASS PUMPING OPERATIONS. BYPASS PUMPING PLAN SHALL INCLUDE SEQUENCE OF DIVERSION OPERATIONS, TEMPORARY PLUGS, SILENCED BYPASS PUMPING SYSTEM, TEMPORARY VEHICLE AND PEDESTRIAN BYPASS, AND SITE REINSTATEMENT AFTER DIVERSION.
   c. CONTRACTOR SHALL BE RESPONSIBLE FOR WRITTEN NOTIFICATION TO PROPERTY OWNERS AFFECTED BY SEWER INSTALLATION AND SEWER BYPASS PUMPING.
   d. CONTRACTOR SHALL BE RESPONSIBLE FOR DAMAGES TO PROPERTY DUE TO SEWER BACKUP WHILE CONTROLLING SEWAGE FLOW.
   e. CONTRACTOR SHALL FURNISH PUMPING EQUIPMENT, CONDUITS, ETC. UNDER NO CIRCUMSTANCES SHALL BYPASSING OF UNTREATED WASTEWATER TO STORM DRAINAGE FACILITY OR SURFACE WATER COURSE BE ALLOWED.
   f. SEWER FLOW CONTROL OPERATIONS SHALL NOT CAUSE FLOODING OR DAMAGE TO PUBLIC OR PRIVATE PROPERTY. SEWAGE FLOW DIVERTED SHALL BE DISCHARGED BACK INTO SANITARY SEWER SYSTEM.
   g. CONTRACTOR SHALL PROVIDE FOR BYPASSING PIPE FLOWS AND LATERAL FLOWS. STANDBY PUMPING CAPACITY FOR 125% AT ALL TIMES.
7. ALL NEW SANITARY SEWER MANHOLES, THE WET WELL AND THE SCREEN TROUGH SHALL INCLUDE INSIDE COATING OF QUADEX® STRUCTURE GUARD® LINING SYSTEM (NO SUBSTITUTION PERMITTED) WITH A MINIMUM THICKNESS OF 150 MILS. MANHOLE BASES SHALL BE COATED PRIOR TO INSTALLATION. MANHOLE SECTIONS MAY BE FIELD COATED PRIOR TO INSTALLATION OR AFTER INSTALLATION. ALL INTERIOR SURFACES OF MANHOLES SHALL BE COATED. WET WELL AND SCREEN TROUGH SHALL BE COATED PRIOR TO THE INTRODUCTION OF SANITARY SEWER FLOWS. WET WELL, SCREEN TROUGH, AND ALL MANHOLE COATING SHALL BE AS PER MANUFACTURER RECOMMENDATIONS INCLUDING SURFACE PREPARATION. CONTRACTOR SHALL PROVIDE THIRD PARTY TESTING OF INSTALLED COATING AS PER MANUFACTURER RECOMMENDATIONS INCLUDING HIGH VOLTAGE SPARK TESTING (HOLIDAY TESTING) AND ADHESION TESTING.

## PUMP STATION PROJECT NOTES

1. EXISTING PUMP STATION SHALL REMAIN IN SERVICE DURING CONSTRUCTION.
2. EXISTING PUMP STATION SHALL REMAIN AS BACKUP FOR THE NEW PUMPING STATION.
3. CONTRACTOR SHALL COORDINATE SITE ACCESS WITH SOUTH SALT LAKE.
4. CONTRACTOR SHALL MAINTAIN ACCESS TO THE EXISTING PUMP STATION FOR CITY PERSONNEL AND VEHICLES.
5. MINIMUM COVER FOR FORCEMAIN SHALL BE 4'.
6. COORDINATE WITH SOUTH SALT LAKE FOR OPERATION OF EXISTING VALVES WHEN CONNECTING NEW PIPING TO EXISTING PIPING.
7. FIELD VERIFY ALL EXISTING PIPE ELEVATIONS AND CONDITIONS PRIOR TO CONSTRUCTION.
8. ALL DISTURBANCE TO THE SITE SHALL BE RESTORED AFTER CONSTRUCTION PER SOUTH SALT LAKE STANDARDS AND AS SHOWN ON DRAWINGS.
9. WHERE NEW PIPING IS TO BE CONNECTED TO EXISTING PIPING:
   a. THE CONTRACTOR SHALL EXCAVATE A TEST PIT TO VERIFY LOCATION, ELEVATION, ORIENTATION, AND MATERIAL OF CONSTRUCTION.
   b. THE CONTRACTOR SHALL FURNISH AND INSTALL ALL ADAPTERS, FITTINGS, AND ADDITIONAL PIPE AS REQUIRED TO COMPLETE THE CONNECTION.

## UTAH DEPARTMENT OF TRANSPORTATION (UDOT) PROJECT NOTES

1. CONTRACTOR SHALL COORDINATE WITH UDOT PRIOR TO THE REMOVAL AND REPLACEMENT OF THE EXISTING UTILITY CONFLICT BOX IN ANDY AVE AS SHOWN ON THE DRAWINGS.
2. CONTRACTOR SHALL PROTECT FLOWS THROUGH THE EXISTING UDOT STORM DRAIN TRUNK LINE DURING THE REPLACEMENT OF THE UTILITY CONFLICT BOX.
3. CONTRACTOR IS RESPONSIBLE FOR THE RECONNECTION OF THE UDOT STORM DRAIN TRUNK LINE ONCE THE EXISTING UTILITY CONFLICT BOX IS REMOVED AND REPLACED PER DETAIL C ON SHEET CD–6.

## UTAH TRANSIT AUTHORITY (UTA) PROJECT NOTES

1. CONTRACTOR SHALL APPLY FOR AND OBTAIN A TRAX TRACK ACCESS PERMIT FROM UTA BEFORE ANY ACCESS WILL BE ALLOWED ON UTA PROPERTY. THE CURRENT CONTACT PERSON FOR OBTAINING A TRAX TRACK ACCESS PERMIT IS JEFF WOODHEAD 385–218–8190, OR SUCH OTHER CONTACT AS SHALL BE IDENTIFIED ON UTA'S WEBSITE LOCATION NOTED BELOW. A COPY OF THE PERMIT THAT WILL NEED TO BE FILLED OUT AND SUBMITTED CAN BE FOUND ON UTA'S WEBSITE, UNDER THE TRACK ACCESS PERMIT TAB. HTTP://WWW.RIDEUTA.COM/PROPERTYMANAGEMENT
2. UTA ACCESS PERMITS WILL NOT BE ISSUED WITHOUT FIRST HAVING AN EXECUTED CONTRACTOR'S RIGHT OF ENTRY AGREEMENT, UTA HAVING RECEIVED PROOF OF INSURANCE AS PROVIDED IN THE RIGHT OF ENTRY AGREEMENT, AND VERIFICATION THAT THE CONTRACTOR AND ALL OF THE CONTRACTOR'S EMPLOYEES HAVE GONE THROUGH UTA'S ROADWAY WORKER TRAINING, IF APPLICABLE.
3. CONTRACTOR SHALL PROVIDE A RAIL MONITORING PLAN TO BE REVIEWED AND APPROVED BY UTA PRIOR TO COMMENCEMENT OF WORK. THE TOP OF RAIL SHALL NOT DEFLECT MORE THAN 1/4" VERTICALLY OR HORIZONTALLY. CONTRACTOR SHALL ALSO PROVIDE AN ESTABLISHED CONTINGENCY PLAN IN THE EVENT OF GROUND LOSS AND/OR THE RAIL DEVIATES 1/4" VERTICAL OR HORIZONTAL, THE CONTINGENCY PLAN MUST BE REVIEWED AND APPROVED BY UTA PRIOR TO COMMENCING THE WORK. IN THE EVENT THAT THE TOP OF RAIL DEFLECTS MORE THAN 1/4", OPERATIONS SHALL STOP IMMEDIATELY AND THE UTA ONSITE REPRESENTATIVE NOTIFIED. WORK SHALL NOT CONTINUE UNTIL UTA'S ENGINEER HAS DETERMINED THE APPROPRIATE ACTION REQUIRED TO PROTECT THE SAFETY, INTEGRITY, AND FUNCTIONALITY OF THE RAILROAD ELEMENTS.
4. CONTRACTOR SHALL PREPARE AND SUBMIT A RAIL MONITORING PLAN TO BE REVIEWED AND APPROVED BY UTA ENGINEERS PRIOR TO INSTALLATION FOR CONSTRUCTION UNDER THE UTA BRIDGE AT 600 WEST.
5. UTA APPLICATION FEE IS WAIVED.
6. WORK WILL BE REQUIRED TO BE PERFORMED DURING UTA NON–REVENUE HOURS (MIDNIGHT TO 4 AM).
7. UTA WILL REQUIRE/PROVIDE RWIC TO BE PRESENT DURING THE PUSH UNDER THE RAIL (MINIMUM $788 PER 8 HOUR SHIFT). THIS WILL BE COLLECTED THROUGH THE WRITTEN AGREEMENT FROM CONTRACTOR.
8. ABANDONED IN PLACE PIPE WILL BE REQUIRED TO BE FLOW FILLED AND CAPPED.
9. SEPARATE RAILROAD PROTECTIVE LIABILITY POLICY IS REQUIRED IN ADDITION TO THE GENERAL LIABILITY INSURANCE REQUIREMENTS.
10. ALL WORKERS, CONTRACTORS, SUBCONTRACTORS AND INVITEES TO THE PROJECT ARE REQUIRED TO OBTAIN UTA ROADWAY WORKER SAFETY CERTIFICATION. INFORMATION RELATED TO THE TRAINING IS AVAILABLE ON THE UTA WEBSITE HTTPS://www.rideuta.com/doing–business/property–management

FILE NAME: PROJECTS\126 – SOUTH SALT LAKE CITY\42.200 – ZELLER AND DOWNTOWN SEWER IMPROVEMENTS\CAD\2 – DOWNTOWN AND PUMP STATION\G–005 GENERAL NOTES.DWG
FILE DATE: 3.6.2024 11:46:27 (MAJ)

LICENSED PROFESSIONAL ENGINEER
4/19/24
No. 5052482
GREGORY S. TUCKETT
STATE OF UTAH
REGISTERED PROFESSIONAL ENGINEER

HANSEN ALLEN & LUCE inc ENGINEERS

| | | | | | | | |
|---|---|---|---|---|---|---|---|
| DESIGNED | ACS | 3 | | | | | |
| DRAFTED | MAJ | 2 | | | | | |
| CHECKED | GST | 1 | | | | | |
| DATE | APRIL 2024 | NO. | DATE | REVISIONS | BY | APVD. | |

SCALE: NONE

SOUTH SALT LAKE

DOWNTOWN SEWER IMPROVEMENTS AND PUMP STATION
GENERAL
GENERAL NOTES

SHEET G–005
126.42.300

7/04

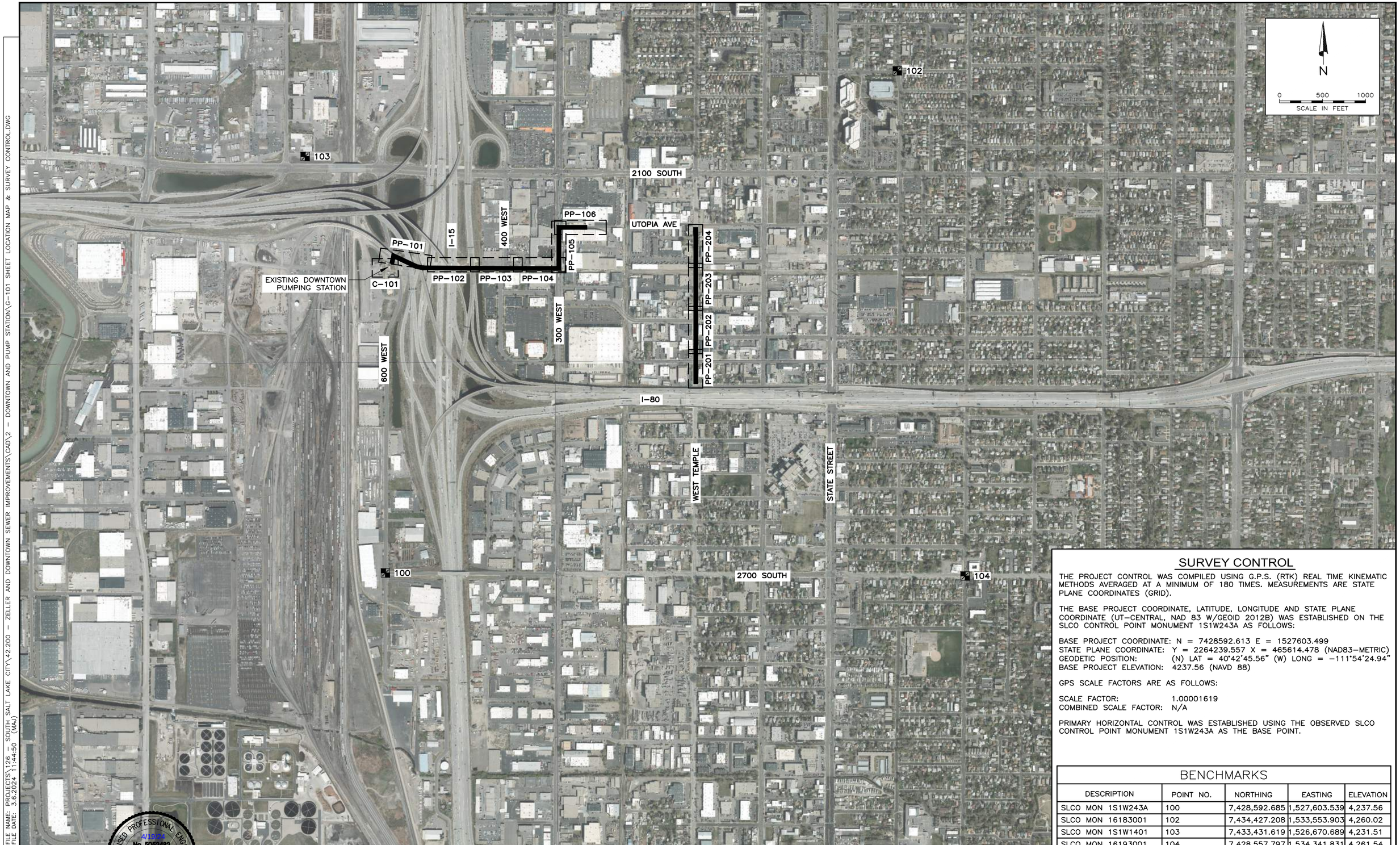


## SURVEY CONTROL

THE PROJECT CONTROL WAS COMPILED USING G.P.S. (RTK) REAL TIME KINEMATIC METHODS AVERAGED AT A MINIMUM OF 180 TIMES. MEASUREMENTS ARE STATE PLANE COORDINATES (GRID).

THE BASE PROJECT COORDINATE, LATITUDE, LONGITUDE AND STATE PLANE COORDINATE (UT–CENTRAL, NAD 83 W/GEOID 2012B) WAS ESTABLISHED ON THE SLCO CONTROL POINT MONUMENT 1S1W243A AS FOLLOWS:

BASE PROJECT COORDINATE: N = 7428592.613 E = 1527603.499
STATE PLANE COORDINATE: Y = 2264239.557 X = 465614.478 (NAD83–METRIC)
GEODETIC POSITION: (N) LAT = 40°42'45.56" (W) LONG = –111°54'24.94"
BASE PROJECT ELEVATION: 4237.56 (NAVD 88)

GPS SCALE FACTORS ARE AS FOLLOWS:

SCALE FACTOR: 1.00001619
COMBINED SCALE FACTOR: N/A

PRIMARY HORIZONTAL CONTROL WAS ESTABLISHED USING THE OBSERVED SLCO CONTROL POINT MONUMENT 1S1W243A AS THE BASE POINT.

## BENCHMARKS

| DESCRIPTION | POINT NO. | NORTHING | EASTING | ELEVATION |
|---|---|---|---|---|
| SLCO MON 1S1W243A | 100 | 7,428,592.685 | 1,527,603.539 | 4,237.56 |
| SLCO MON 16183001 | 102 | 7,434,427.208 | 1,533,553.903 | 4,260.02 |
| SLCO MON 1S1W1401 | 103 | 7,433,431.619 | 1,526,670.689 | 4,231.51 |
| SLCO MON 16193001 | 104 | 7,428,557.797 | 1,534,341.831 | 4,261.54 |

LICENSED PROFESSIONAL ENGINEER
4/19/24
No. 5052482
GREGORY S. THOMAS
REGISTERED PROFESSIONAL ENGINEER

HANSEN ALLEN & LUCE inc
ENGINEERS

DESIGNED ACS
DRAFTED TPB, MAJ
CHECKED GST
DATE APRIL 2024

| NO. | DATE | REVISIONS | BY | APVD. |
|---|---|---|---|---|
| 3 | | | | |
| 2 | | | | |
| 1 | | | | |

SCALE AS SHOWN

SOUTH SALT LAKE

DOWNTOWN SEWER IMPROVEMENTS AND PUMP STATION GENERAL
SHEET LOCATION MAP & SURVEY CONTROL

SHEET G–101
126.42.300

FILE NAME: PROJECTS\126 – SOUTH SALT LAKE CITY\42.200 – ZELLER AND DOWNTOWN SEWER IMPROVEMENTS\CAD\2 – DOWNTOWN AND PUMP STATION\G–101 SHEET LOCATION MAP & SURVEY CONTROL.DWG
FILE DATE: 3.6.2024 11:44:50 (MAJ)

7/04

| TEST HOLE NO. | DATE | SIZE | TYPE | MATERIAL | OWNER | POINT | NORTHING | EASTING | GROUND ELEVATION | DEPTH (FEET) | TOP ELEVATION | SURFACE TYPE | PAVEMENT DEPTH | SHEET | STATION | COMMENTS |
|---|---|---|---|---|---|---|---|---|---|---|---|---|---|---|---|---|
| 201 | 5/21/2020 | 2" | Fiber Optic | Plastic | Comcast | 2357 | 7432221.85 | 1527696.40 | 4234.76 | 2.20 | 4232.56 | Asphalt | 6" | PP-101 | 2+48 | |
| 202 | 5/21/2020 | 24" / 4" | Fiber Optic | Conrete / Plastic | Syringa | 2239 | 7432275.50 | 1527718.57 | 4235.01 | 2.43 | 4232.58 | Natural | N/A | PP-101 | 3+03 | Apparent bottom of utilities at 4.29'. Utility bottom noted as apparent bottom unless noted as actual bottom. Additional material and/or utilities may exist below apparent bottom or actual bottom. |
| 204 | 5/21/2020 | 2" | Telephone | Plastic | Century Link | 2239 | 7432275.50 | 1527718.57 | 4235.01 | 4.90 | 4230.11 | Natural | N/A | PP-101 | 3+03 | Test hole called for water line but water line is not impacted. Telephone line dug at this location. |
| 205 | 7/2/2020 | (2) 2" | Gas | Plastic | Dominion Energy | 3124 | 7432181.33 | 1527922.44 | 4234.06 | 2.52 | 4231.54 | Natural | N/A | PP-101 | 5+15 | Apparent bottom of utilities at 3.15'. Utility bottom noted as apparent bottom unless noted as actual bottom. Additional material and/or utilities may exist below apparent bottom or actual bottom. |
| 208 | 7/2/2020 | 10" | Water | Metal | South Salt Lake City | 3131 | 7432141.43 | 1528227.97 | 4233.46 | 4.53 | 4228.93 | Natural | N/A | PP-102 | 8+24 | |
| 209 | 7/2/2020 | 2" | Gas | Plastic | Dominion Energy | 3136 | 7432151.80 | 1528663.01 | 4233.61 | 3.80 | 4229.81 | Natural | N/A | PP-103 | 12+61 | |
| 211 | 5/20/2020 | 10" | Water | Plastic | South Salt Lake City | 2318 | 7432163.85 | 1528995.67 | 4233.91 | 3.07 | 4230.84 | Asphalt | 4" | PP-103 | 15+97 | |
| 214 | 5/19/2020 | 24" wide | Fiber Optic/Telephone | Concrete | CenturyLink | 2322 | 7432161.94 | 1529595.28 | 4236.62 | 3.12 | 4233.50 | Concrete | 6" | PP-105 | 21+97 | Apparent bottom of utilities at 3.59'. Utility bottom noted as apparent bottom unless noted as actual bottom. Additional material and/or utilities may exist below apparent bottom or actual bottom. |
| 215 | 5/19/2020 | 4" | Gas | Plastic | Dominion Energy | 2321 | 7432161.55 | 1529601.52 | 4236.73 | 3.75 | 4232.98 | Asphalt | 6" | PP-105 | 22+03 | |
| 217 | 5/19/2020 | 2" | Fiber Optic | Plastic | CenturyLink | 2319 | 7432207.80 | 1529651.42 | 4235.74 | 2.67 | 4233.07 | Asphalt | 3" | NOT SHOWN | 22+88 | |
| 219 | 5/19/2020 | 2" | Fiber Optic | Plastic | CenturyLink | 2323 | 7432599.03 | 1529644.80 | 4235.17 | 3.45 | 4231.72 | Asphalt | 4" | PP-106 | 26+99 | |
| 221 | 5/19/2020 | 8" per plan | Water | Plastic | South Salt Lake City | 2324 | 7432605.25 | 1529655.10 | 4234.48 | 4.18 | 4230.30 | Asphalt | 4" | PP-106 | 27+09 | |
| 223 & 224 | 5/19/2020 | (2) 2" | Cable TV/Fiber Optic | Plastic | Comcast | 2325 | 7432604.57 | 1529667.98 | 4234.27 | 2.55 | 4231.72 | Asphalt | 4" | PP-106 | 27+22 | |
| 225 | 5/20/2020 | 1"/2.5" | Water/Unknown | Metal/Plastic | South Salt Lake City/Unknown | 2362 | 7432606.02 | 1529728.84 | 4234.86 | 4.21 | 4230.65 | Asphalt | 5" | PP-106 | 27+83 | Depth to top of unknown at 3.87'. |
| 226 | 5/18/2020 | 2" | Fiber Optic | Plastic | CenturyLink | 2363 | 7432597.42 | 1529932.00 | 4236.10 | 1.93 | 4234.17 | Natural | N/A | PP-106 | 29+86 | |
| 250 | 5/18/2020 | 6" | Water | Plastic | South Salt Lake City | 2327 | 7432633.92 | 1531244.69 | 4241.69 | 3.66 | 4238.03 | Asphalt | 3" | PP-204 | 41+48 | |
| 254 | 5/18/2020 | 8" | Water | Plastic | South Salt Lake City | 2328 | 7432225.33 | 1531239.52 | 4242.52 | 4.72 | 4237.80 | Asphalt | 8" | PP-204 | 37+39 | |
| 259 | 5/18/2020 | 8" | Water | Plastic | South Salt Lake City | 2331 | 7431850.06 | 1531239.68 | 4242.24 | 3.79 | 4238.45 | Asphalt | 5" | PP-203 | 33+60 | |
| 263 | 5/14/2020 | 6" | Water | Plastic | South Salt Lake City | 2333 | 7431345.24 | 1531236.43 | 4242.11 | 3.67 | 4238.44 | Asphalt | 5" | PP-202 | 28+56 | |
| 265 | 5/14/2020 | 2" | Fiber Optic | Plastic | Utopia | 2332 | 7431304.83 | 1531230.43 | 4241.84 | 3.36 | 4238.48 | Concrete | 7" | PP-202 | 28+15 | |
| 267 | 5/14/2020 | 6" | Water | Plastic | South Salt Lake City | 2334 | 7431036.58 | 1531240.49 | 4242.84 | 3.99 | 4238.85 | Asphalt | 5" | PP-201 | 25+47 | |
| 270 | 5/14/2020 | 6" | Water | Plastic | South Salt Lake City | 2335 | 7430770.68 | 1531225.01 | 4242.98 | 4.60 | 4238.38 | Concrete | 13" | PP-201 | 22+81 | |
| 271A | 5/20/2020 | 18" | Sewer | Concrete | South Salt Lake City | 2364 | 7432115.52 | 1531229.42 | 4243.22 | 11.45 | 4231.77 | Concrete | 12" | PP-203 | 36+28 | Encountered ~1' of concrete. Moved south within the test hole around the concrete. Line possibly encased with concrete. |
| 271B | 7/6/2020 | 18" | Sewer | Concrete | South Salt Lake City | 2365 | 7432111.51 | 1531229.35 | 4243.26 | 11.49 | 4231.77 | Concrete | 12" | PP-203 | 36+24 | Unable to locate casing at this location. |
| 272A | 5/19/2020 | 10" | Unknown | Metal | Unknown | 2366 | 7432031.41 | 1531224.08 | 4243.01 | 3.88 | 4239.13 | Concrete | 10" | PP-203 | 35+44 | Unable to locate casing at this location. |
| 272B | 7/6/2020 | 18" | Sewer | Concrete | South Salt Lake City | 2367 | 7432059.42 | 1531228.85 | 4243.07 | 11.24 | 4231.83 | Concrete | 12" | PP-203 | 35+72 | Unable to locate casing at this location. |
| 272C | 7/6/2020 | 10" | Unknown | Metal | Unknown | 2368 | 7432055.52 | 1531227.82 | 4243.02 | 3.64 | 4239.38 | Concrete | 12" | PP-203 | 35+68 | Located unknown line while looking for the steel casing. |

**CONTACT INFORMATION TABLE**

| AGENCY | UTILITY | CONTACT NAME | PHONE | EMAIL |
|---|---|---|---|---|
| BEEHIVE BROADBAND | FIBER & PHONE | BEEHIVE ENGINEERING | 435-837-6141 | engineering@beehive.net |
| CENTRACOM INTERACTIVE | CATV & PHONE | ALISA FAATZ | 435-427-3331 | alisa@centracom.com |
| CENTRAL VALLEY WATER RECLAMATION | SEWER | BRANDON HEIDELBERGER | 801-973-9100 | heidelbergerb@cvwrf.org |
| CENTURYLINK LOCAL NETWORK | FIBER & PHONE | DAVID SLOAN | 801-974-8232 | David.Sloan2@centurylink.com |
| COMCAST | CATV & FIBER | JEFF HOUSTON | 435-224-2356 | jeff.houston@telecon.com |
| DOMINION ENERGY UTAH | GAS | JOHN STAPLES | 435-324-3765 | john.staples@dominionenergy.com |
| EMERY TELCOM | PHONE | SCOTT WILLIAMS | 435-748-3126 | SWilliams@emerytelcom.com |
| FIRSTDIGITAL TELECOM | FIBER | BRANDON BALMFORTH | 801-456-1095 | bbalmforth@firstdigital.com |
| ROCKY MOUNTAIN POWER | ELECTRIC | JOEL SIMMONS | 503-813-6993 | GISDept@PacifiCorp.com |
| SALT LAKE CITY PUBLIC UTILITIES | STORM DRAIN, SEWER, WATER | NICK KRYGER | 801-483-6834 | nick.kryger@slcgov.com |
| SOUTH SALT LAKE CITY | STORM DRAIN, SEWER, WATER | ED RUFENER | 801-412-3210 | erufener@sslc.net |
| UDOT REGION II | FIBER & TRAFFIC SIGNALS | GOLDEN HOLT | 801-887-3403 | r2permits@utah.gov |
| ZAYO FIBER SOLUTIONS | FIBER | SYLVAN STEWART | 801-808-7365 | sylvan.stewart@zayo.com |

NOTES:

1. THE LEVEL OF SUBSURFACE UTILITY ENGINEERING (SUE) FOR EXISTING UTILITIES IS DEPICTED ON THE DRAWINGS. THE LEVELS ARE IN ACCORDANCE WITH THE AMERICAN SOCIETY OF CIVIL ENGINEERING STANDARD GUIDELINE 39–02 TITLED "STANDARD GUIDELINE FOR THE COLLECTION AND DEPICTION OF SUBSURFACE DATA." THE LEVELS ARE GENERALLY DESCRIBED BELOW:
   - 1.1. SUE D – RECORDS RESEARCH/DATA COLLECTION
   - 1.2. SUE C – ABOVE GROUND SURVEY
   - 1.3. SUE B – UTILITY DESIGNATION
   - 1.4. SUE A – TEST HOLE/POT HOLING

LICENSED PROFESSIONAL ENGINEER
4/19/24
No. 5052482
GREGORY S. THOMAS
STATE OF UTAH

HANSEN ALLEN & LUCE inc ENGINEERS

| | | | | | |
|---|---|---|---|---|---|
| DESIGNED | ACS | 3 | | | |
| DRAFTED | TPB, MAJ | 2 | | | |
| CHECKED | GST | 1 | | | |
| DATE | APRIL 2024 | NO. | DATE | REVISIONS | BY APVD. |

SCALE: NONE

SOUTH SALT LAKE

DOWNTOWN SEWER IMPROVEMENTS AND PUMP STATION
GENERAL
TEST HOLE DATA

SHEET G–102

126.42.300

FILE NAME: PROJECTS\126 – SOUTH SALT LAKE CITY\42.200 – ZELLER AND DOWNTOWN SEWER IMPROVEMENTS\CAD\2 – DOWNTOWN AND PUMP STATION\G–102 TEST HOLE DATA DOWNTOWN.DWG
FILE DATE: 3.6.2024 11:41:41 (MAJ)

7/04

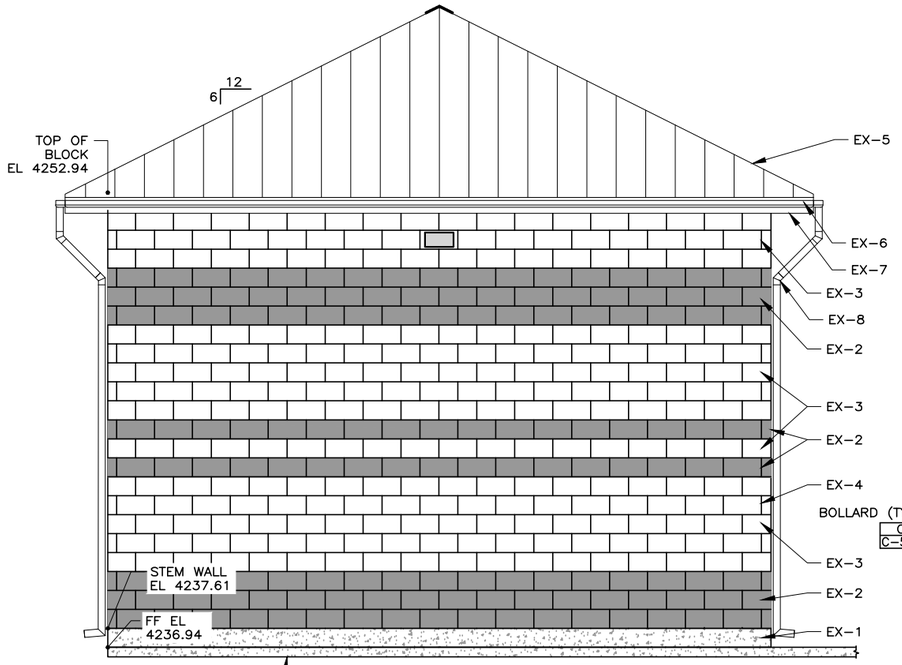


NORTH ELEVATION 1 C-106

SCALE IN FEET

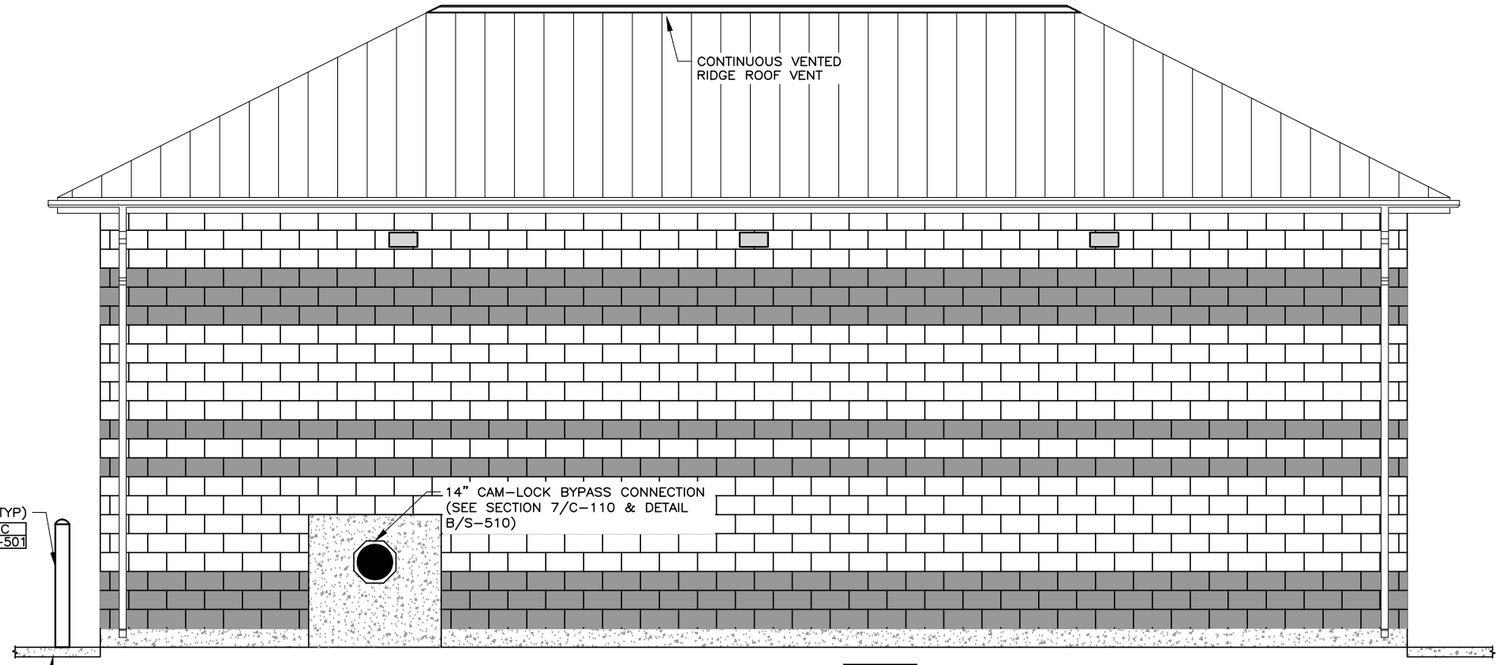


EAST ELEVATION 2 C-106

SCALE IN FEET

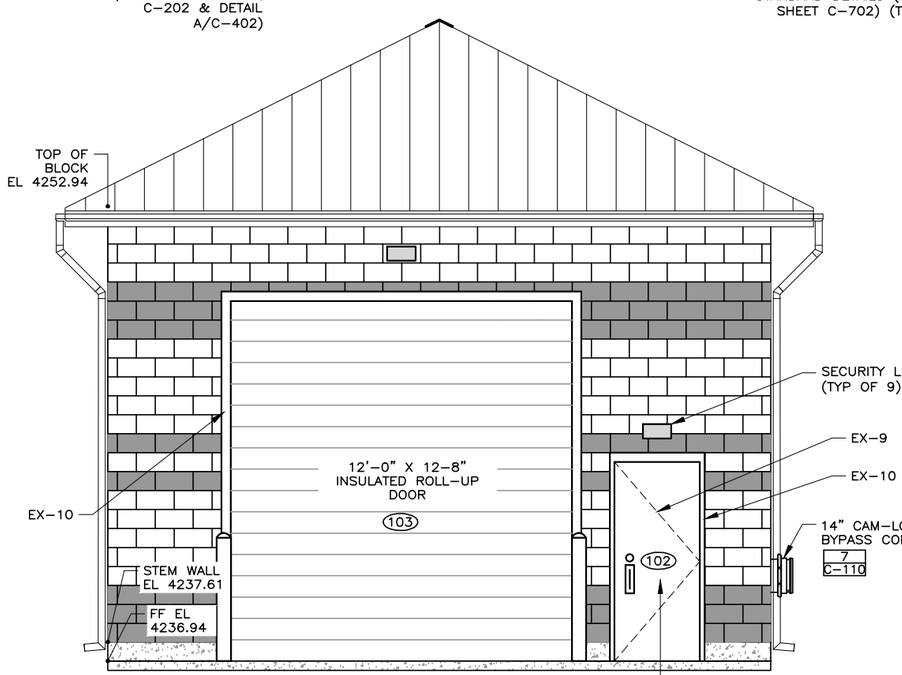


SOUTH ELEVATION 3 C-106

SCALE IN FEET

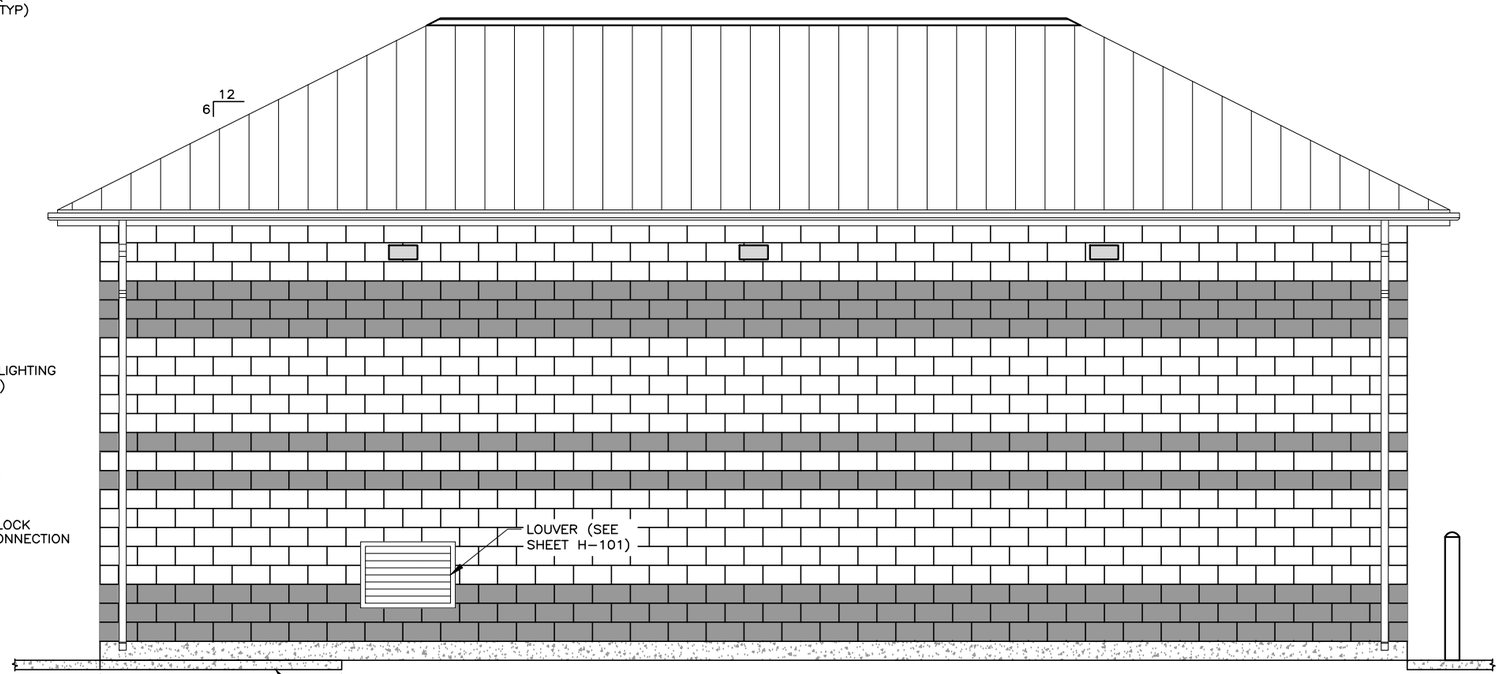


WEST ELEVATION 4 C-106

SCALE IN FEET

LICENSED PROFESSIONAL ENGINEER
4/19/24
No. 5052482
GREGORY S. THOMAS
STATE OF UTAH

HANSEN ALLEN & LUCE inc ENGINEERS

| | | | | | |
|---|---|---|---|---|---|
| DESIGNED | ACS | 3 | | | |
| DRAFTED | BKC, MAJ | 2 | | | |
| CHECKED | GST | 1 | | | |
| DATE | APRIL 2024 | NO. | DATE | REVISIONS | BY / APVD. |

SCALE: AS SHOWN

SOUTH SALT LAKE

DOWNTOWN SEWER IMPROVEMENTS AND PUMP STATION
ARCHITECTURAL
PUMPHOUSE ELEVATIONS

SHEET A-101

126.42.300

FILE NAME: PROJECTS\126 - SOUTH SALT LAKE CITY\42.200 - ZELLER AND DOWNTOWN SEWER IMPROVEMENTS\CAD\2 - DOWNTOWN AND PUMP STATION\A-101 PUMPHOUSE ELEVATIONS.DWG
FILE DATE: 4.17.2024 15:40:06 (MAJ)

7/04

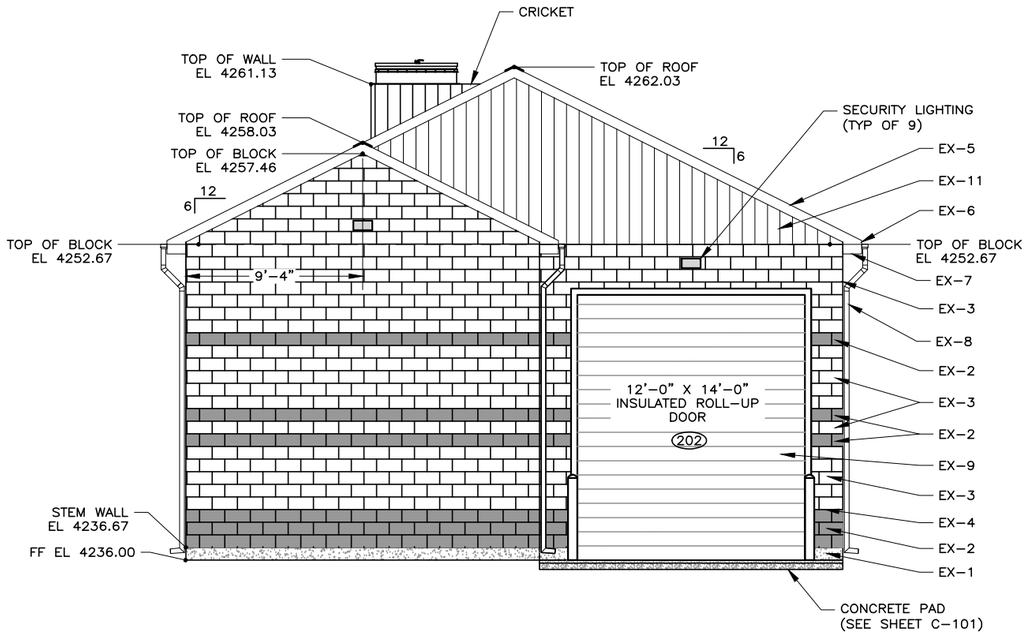


NORTH ELEVATION 1 C-202

0 4 8
SCALE IN FEET

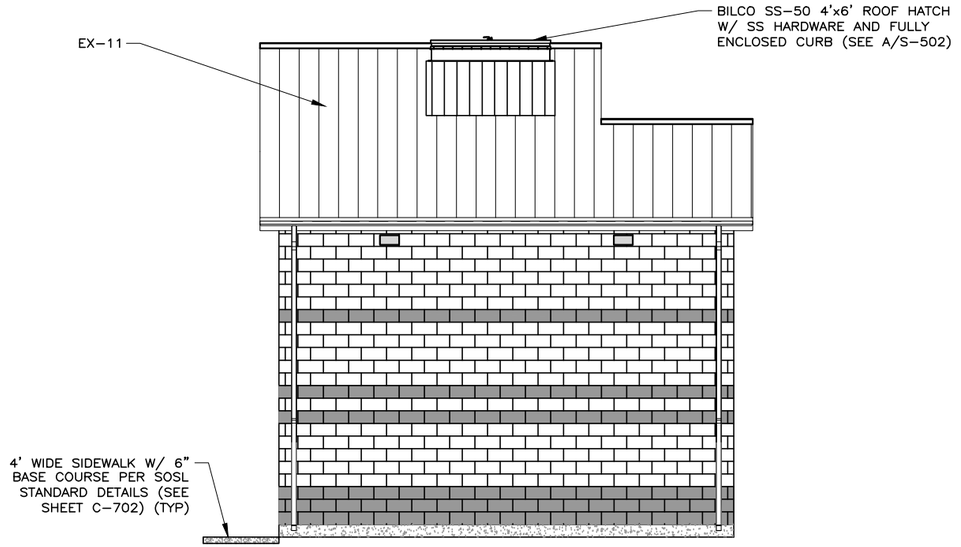


EAST ELEVATION 2 C-202

0 4 8
SCALE IN FEET

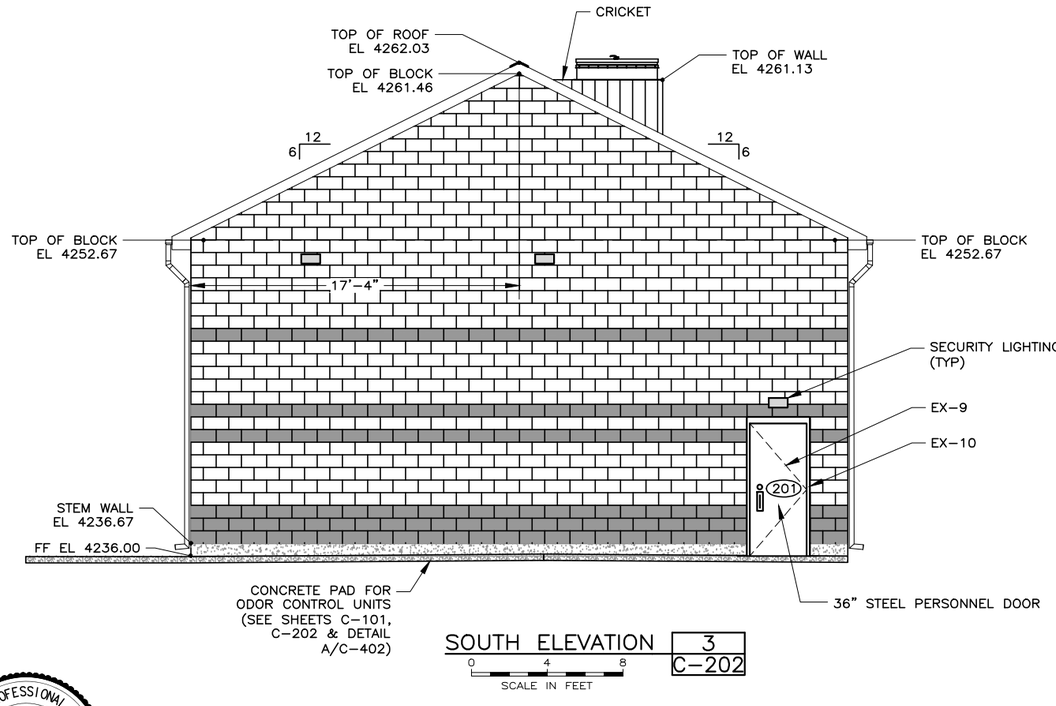


SOUTH ELEVATION 3 C-202

0 4 8
SCALE IN FEET

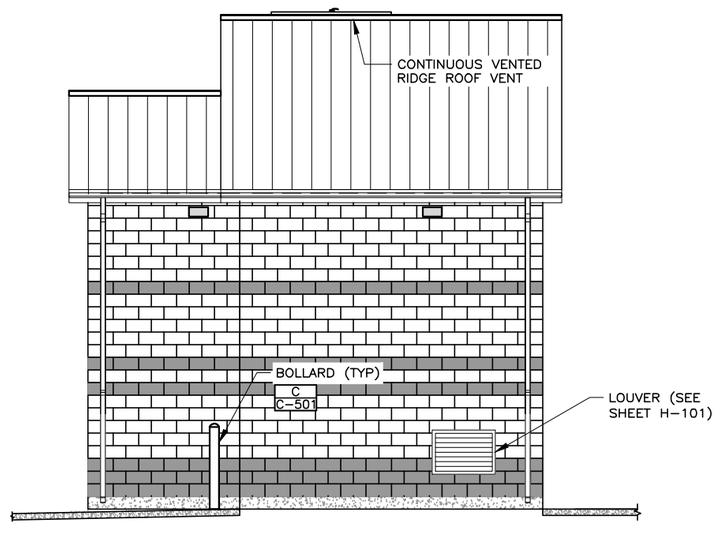


WEST ELEVATION 4 C-202

0 4 8
SCALE IN FEET

FILE NAME: PROJECTS\126 - SOUTH SALT LAKE CITY\42.200 - ZELLER AND DOWNTOWN SEWER IMPROVEMENTS\CAD\2 - DOWNTOWN AND PUMP STATION\A-201 SCREEN BUILDING ELEVATIONS.DWG
FILE DATE: 4.17.2024 15:47:99 (MAJ)

HANSEN ALLEN & LUCE inc ENGINEERS

LICENSED PROFESSIONAL ENGINEER
4/19/24
No. 5052482
GREGORY S. THOMAS
STATE OF UTAH

| | | | | | | |
|---|---|---|---|---|---|---|
| DESIGNED | ACS | 3 | | | | |
| DRAFTED | MAJ | 2 | | | | |
| CHECKED | GST | 1 | | | | |
| DATE | APRIL 2024 | NO. | DATE | REVISIONS | BY | APVD. |

SCALE AS SHOWN

SOUTH SALT LAKE

DOWNTOWN SEWER IMPROVEMENTS AND PUMP STATION
ARCHITECTURAL
SCREEN BUILDING ELEVATIONS

SHEET A-201
126.42.300

7/04

## DOOR SCHEDULE

| TAG NO. | DOOR | | | | | | FRAME | | | | | DETAILS | | | HARDWARE | REMARKS |
|---|---|---|---|---|---|---|---|---|---|---|---|---|---|---|---|---|
| | WIDTH | HEIGHT | THICK | TYPE | MATERIAL | FINISH | WIDTH | HEIGHT | THICK | FRAME MAT | FRAME FINISH | HEAD | JAMB | THRESHOLD | | |
| 101 | 3'–0" | 7'–0" | 1 3/4" | SINGLE | HM | NOTE 1 | 3'–4" | 7'–4" | 5 3/4" | HM (GROUTED) | NOTE 1 | A/A–502 | B/A–502 | C/A–502 | SEE SPEC | ACOUSTIC DOOR |
| 102 | 3'–0" | 7'–0" | 1 3/4" | SINGLE | HM | NOTE 1 | 3'–4" | 7'–4" | 7 1/4" | STEEL (WRAP) | NOTE 1 | A/A–503 | B/A–503 | C/A–502 | SEE SPEC | ACOUSTIC DOOR, WRAP AROUND FRAME FOR STEEL STUD FRAMING |
| 103 | 12'–0" | 12'–8" | SEE SPEC | COILING | SEE SPEC | NOTE 2 | SEE SPEC | SEE SPEC | – | STEEL | NOTE 2 | E/A–502 | F/A–502 | G/A–502 | SEE SPEC | MOTOR OPERATED OVERHEAD COILING DOOR – PUMPHOUSE |
| 201 | 3'–0" | 7'–0" | 1 3/4" | SINGLE | HM | NOTE 1 | 3'–4" | 7'–4" | 7 1/4" | STEEL (WRAP) | NOTE 1 | A/A–503 | B/A–503 | C/A–502 | SEE SPEC | ACOUSTIC DOOR, WRAP AROUND FRAME FOR STEEL STUD FRAMING |
| 202 | 12'–0" | 14'–0" | SEE SPEC | COILING | SEE SPEC | NOTE 2 | SEE SPEC | SEE SPEC | – | STEEL | NOTE 2 | E/A–502 | F/A–502 | G/A–502 | SEE SPEC | MOTOR OPERATED OVERHEAD COILING DOOR – MECH SCREEN BLDG |

## INTERIOR PAINTING SCHEDULE

| LOCATION | MATERIAL | COLOR | REMARKS |
|---|---|---|---|
| PUMP STATION DRY WELL FLOOR | CONCRETE | GRAY | SYSTEM #10 – CLEAN AND PREPARE FLOOR, SIKAFLEX CONCRETE FLOOR EDGE, COAT FLOOR AND CONCRETE STEM WALL (ADD FINE AGGREGATE TO FLOOR) |
| PUMP STATION UPPER LEVEL FLOOR | CONCRETE | GRAY | SYSTEM #10 – CLEAN AND PREPARE FLOOR, SIKAFLEX CONCRETE FLOOR EDGE, COAT FLOOR AND CONCRETE STEM WALL |
| SCREEN BUILDING FLOORS | CONCRETE | GRAY | SYSTEM #10 – CLEAN AND PREPARE FLOOR, SIKAFLEX CONCRETE FLOOR EDGE, COAT FLOOR AND CONCRETE STEM WALL (ADD FINE AGGREGATE TO FLOOR) |
| PUMP STATION WALLS | CONCRETE | GRAY | SYSTEM #13 |
| SCREEN BUILDING WALLS | CONCRETE | GRAY | SYSTEM #13 |
| WET WELL AND SCREEN TROUGH | CONCRETE | STANDARD (LIGHT BLUE) | RAVEN 405 LINING SYSTEM – PREPARE SURFACE AND APPLY PER MANUFACTURER'S RECOMMENDATIONS WITH A MINIMUM THICKNESS OF 150 MILS. PROVIDE THIRD PARTY TESTING INCLUDING HIGH VOLTAGE SPARK TESTING (HOLIDAY TESTING) AND ADHESION TESTING |
| CEILING | PLYWOOD | WHITE | WITH BATTEN BOARDS |
| PIPING | METAL | GREEN | EXPOSED PIPE, VALVES & FITTINGS TO BE PAINTED |

## EXTERIOR COLOR SCHEDULE

| MARK | MATERIAL | MANUFACTURER | FINISH | COLOR | REMARKS |
|---|---|---|---|---|---|
| EX–1 | CONCRETE | GEN. CONTR. | STONE RUB | NATURAL | |
| EX–2 | CMU | SUN–ROC | SPLIT | OWNER | 8"W X 8"H X 16"L COAT OUTSIDE WALLS W/ GRAFFITI COAT |
| EX–3 | CMU | SUN–ROC | SPLIT | OWNER | 8"W X 8"H X 16"L COAT OUTSIDE WALLS W/ GRAFFITI COAT |
| EX–4 | MORTAR | SPEC–MIX | SMOOTH | OWNER | CONCAVE JOINTS |
| EX–5 | METAL ROOF | FABRAL | GALVALUME | OWNER | 2" STANDING SEAM |
| EX–6 | FACIA | FABRAL | GALVALUME | OWNER | |
| EX–7 | SOFFIT | FABRAL | GALVALUME | OWNER | VENTED |
| EX–8 | GUTTER/DOWN SPOUT | FABRAL | GALVALUME | OWNER | 4" DEEP, 4" WIDE, DOWN SPOUT 6" X 6" GUTTER |
| EX–9 | DOORS | – | SMOOTH | OWNER | FACTORY PRIMED |
| EX–10 | STEEL DOORFRAME | GENERAL CONTRACTOR | MATTE EPOXY | OWNER | |
| EX–11 | METAL SIDING | FABRAL | GALVALUME | OWNER | 2" REVEAL; 2" PENCIL RIBS |

NOTES:

1. SEE SPECIFICATIONS SECTION 09 90 00 PAINTING AND FINISHES FOR TYPICAL FINISH.
2. SEE SPECIFICATIONS SECTION 08 33 23 OVERHEAD COILING DOORS FOR FACTORY FINISH.
3. ALL HOLLOW METAL DOORS AND FRAMES SHALL BE GALVANIZED.
4. OWNER TO SELECT ARCHITERCTURAL COLORS.

LICENSED PROFESSIONAL ENGINEER
4/19/24
No. 5052482
GREGORY S. THOMAS
REGISTERED PROFESSIONAL ENGINEER

HANSEN ALLEN & LUCE, Inc. ENGINEERS

DESIGNED ACS
DRAFTED MAJ
CHECKED GST
DATE APRIL 2024

| NO. | DATE | REVISIONS | BY | APVD. |
|---|---|---|---|---|
| 3 | | | | |
| 2 | | | | |
| 1 | | | | |

SCALE NONE

SOUTH SALT LAKE

DOWNTOWN SEWER IMPROVEMENTS AND PUMP STATION
ARCHITECTURAL
ARCHITECTURAL SCHEDULES

SHEET A–501

126.42.300

FILE NAME: PROJECTS\126 – SOUTH SALT LAKE CITY\42.200 – ZELLER AND DOWNTOWN SEWER IMPROVEMENTS\CAD\2 – FILE DATE: 4/17/2024 16:15:59 (MAJ)

7/04

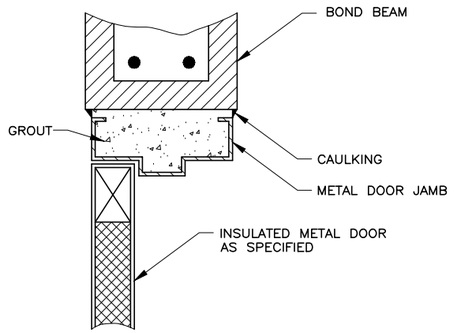


DOOR HEAD NTS | A | A–501

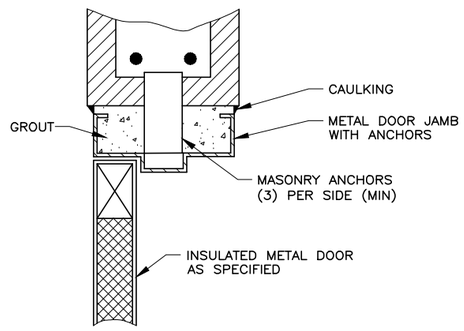


DOOR JAMB NTS | B | A–501

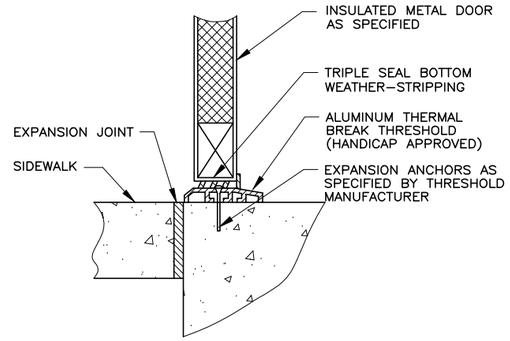


DOOR SILL NTS | C | A–501 | C | C–109

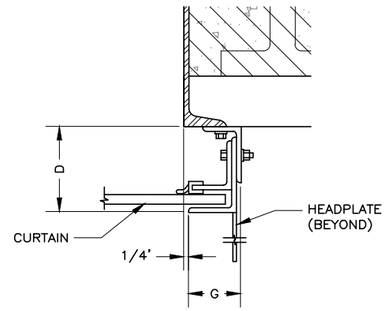


DIMENSIONS G, M AND D*
F265 SLAT

| DIMENSIONS | Max. Door Opening Widths | | |
|---|---|---|---|
| | 9'0" | 15'0" | 20'0" |
| G | 3" | 3 1/2" | 4" |
| M | 5 1/4" | 5 3/4" | 6 3/4" |
| D | 4 1/2" | 5" | 5" |

NOTE:
BOLT COILING DOOR TO STEEL CHANNEL. WELDING NOT PERMITTED. BOLT SIZE PER DOOR MANUFACTURER.

COILING DOOR GUIDE NTS | D | — | D | C–109

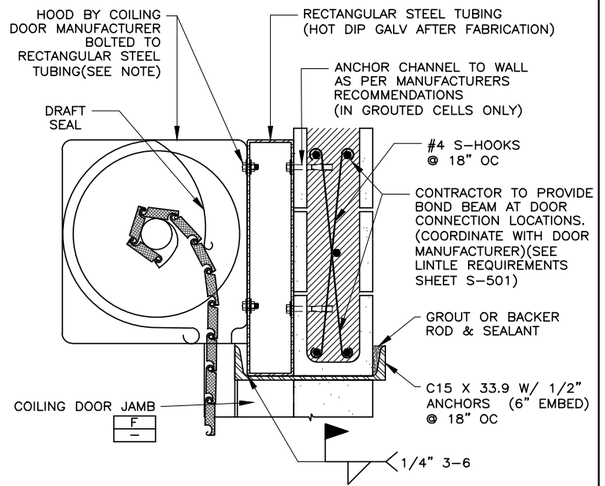


NOTE:
BOLT COILING DOOR TO STEEL CHANNEL. WELDING NOT PERMITTED. BOLT SIZE PER DOOR MANUFACTURER.

COILING DOOR HEAD NTS | E | A–501 | E | C–106 | E | C–109 | E | S–105 | E | S–205

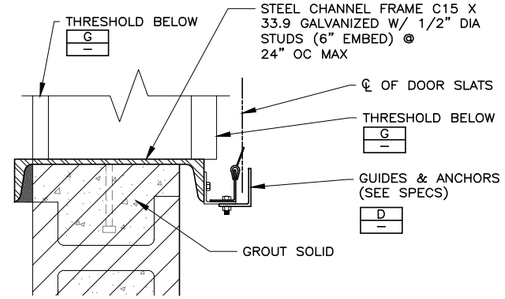


NOTE:

BOLT COILING DOOR TO STEEL CHANNEL. WELDING NOT PERMITTED. BOLT SIZE PER DOOR MANUFACTURER.

COILING DOOR – JAMB NTS | F | — | F | A–501 | F | S–105 | F | S–205

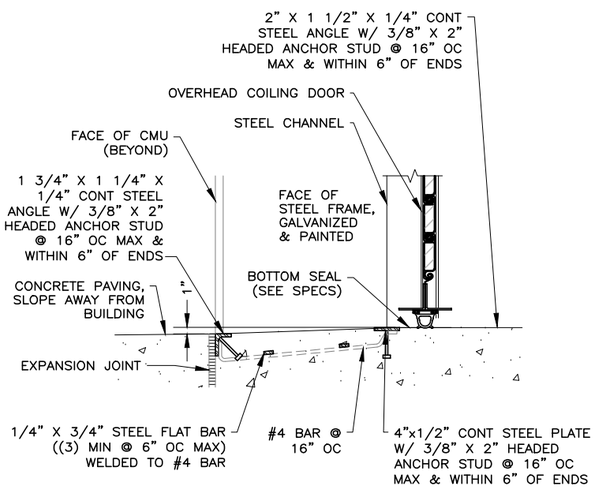


NOTE:
HOT DIP GALVANIZED THRESHOLD ASSEMBLY AFTER FABRICATION.

COILING DOOR – THRESHOLD NTS | G | — | G | A–501 | G | C–109 | G | S–204

FILE NAME: PROJECTS\126 – SOUTH SALT LAKE CITY\42.200 – ZELLER AND DOWNTOWN SEWER IMPROVEMENTS\CAD\2 – DOWNTOWN AND PUMP STATION\A–502 DOOR DETAILS 1.DWG
FILE DATE: 4.17.2024 16:17:06 (MAJ)

HANSEN ALLEN & LUCE inc ENGINEERS

LICENSED PROFESSIONAL ENGINEER
4/19/24
No. 5052482
GREGORY S. THOMAS
STATE OF UTAH

| | |
|---|---|
| DESIGNED | ACS |
| DRAFTED | MAJ |
| CHECKED | GST |
| DATE | APRIL 2024 |

| NO. | DATE | REVISIONS | BY | APVD. |
|---|---|---|---|---|
| 3 | | | | |
| 2 | | | | |
| 1 | | | | |

SCALE
NOT TO SCALE

SOUTH SALT LAKE

DOWNTOWN SEWER IMPROVEMENTS AND PUMP STATION
ARCHITECTURAL
DOOR DETAILS 1

SHEET
A–502
126.42.300

7/04

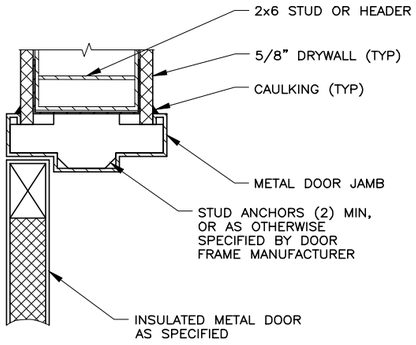


DETAIL NOTES:

1. DOOR OPENING SIZE TO BE ADJUSTED AS NECESSARY TO MEET FRAME MANUFACTURER'S REQUIREMENTS.

WRAP DOOR HEAD W/ STEEL FRAMING — A / A-501
NTS

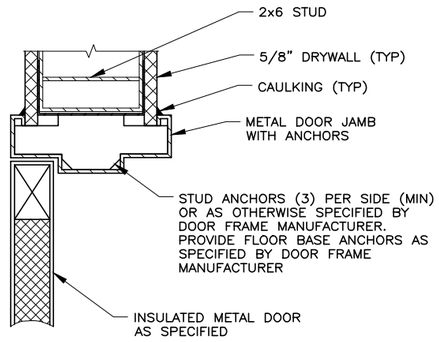


DETAIL NOTES:

1. DOOR OPENING SIZE TO BE ADJUSTED AS NECESSARY TO MEET FRAME MANUFACTURER'S REQUIREMENTS.

WRAP DOOR JAMB W/ STEEL FRAMING — B / A-501
NTS

FILE NAME: PROJECTS\126 - SOUTH SALT LAKE CITY\42.200 - ZELLER AND DOWNTOWN SEWER IMPROVEMENTS\CAD\2 - DOWNTOWN AND PUMP STATION\A-503 DOOR DETAILS II.DWG
FILE DATE: 4.17.2024 16:18:13 (MAJ)

LICENSED PROFESSIONAL ENGINEER
4/19/24
No. 5052482
GREGORY S. THOMAS
STATE OF UTAH

HANSEN ALLEN & LUCE inc ENGINEERS

| | | | | | |
|---|---|---|---|---|---|
| DESIGNED | ACS | 3 | | | |
| DRAFTED | MAJ | 2 | | | |
| CHECKED | GST | 1 | | | |
| DATE | APRIL 2024 | NO. | DATE | REVISIONS | BY / APVD. |

SCALE: NOT TO SCALE

SOUTH SALT LAKE

DOWNTOWN SEWER IMPROVEMENTS AND PUMP STATION
ARCHITECTURAL
DOOR DETAILS II

SHEET: A-503
126.42.300

7/04

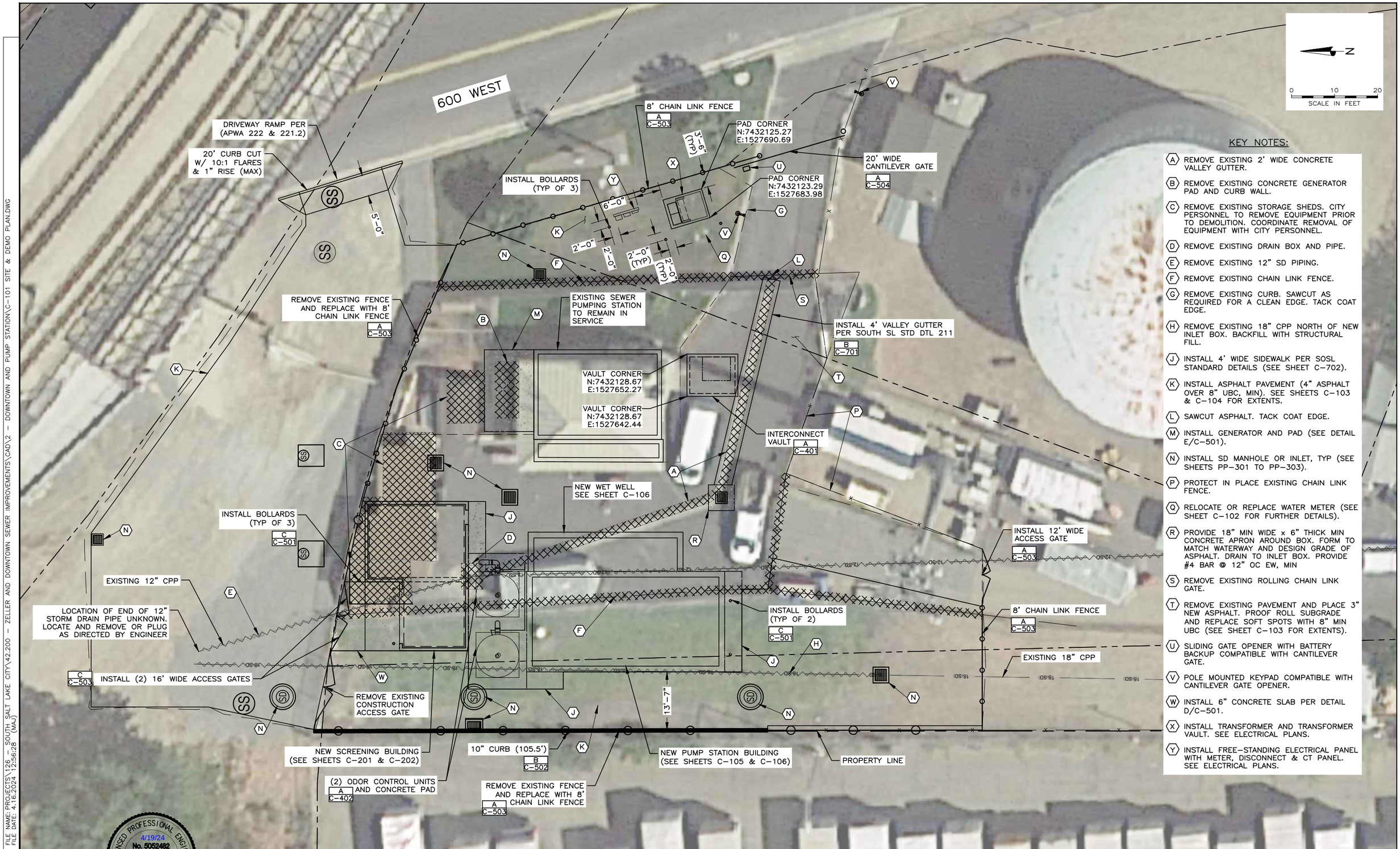


## KEY NOTES:

- (A) REMOVE EXISTING 2' WIDE CONCRETE VALLEY GUTTER.
- (B) REMOVE EXISTING CONCRETE GENERATOR PAD AND CURB WALL.
- (C) REMOVE EXISTING STORAGE SHEDS. CITY PERSONNEL TO REMOVE EQUIPMENT PRIOR TO DEMOLITION. COORDINATE REMOVAL OF EQUIPMENT WITH CITY PERSONNEL.
- (D) REMOVE EXISTING DRAIN BOX AND PIPE.
- (E) REMOVE EXISTING 12" SD PIPING.
- (F) REMOVE EXISTING CHAIN LINK FENCE.
- (G) REMOVE EXISTING CURB. SAWCUT AS REQUIRED FOR A CLEAN EDGE. TACK COAT EDGE.
- (H) REMOVE EXISTING 18" CPP NORTH OF NEW INLET BOX. BACKFILL WITH STRUCTURAL FILL.
- (J) INSTALL 4' WIDE SIDEWALK PER SOSL STANDARD DETAILS (SEE SHEET C-702).
- (K) INSTALL ASPHALT PAVEMENT (4" ASPHALT OVER 8" UBC, MIN). SEE SHEETS C-103 & C-104 FOR EXTENTS.
- (L) SAWCUT ASPHALT. TACK COAT EDGE.
- (M) INSTALL GENERATOR AND PAD (SEE DETAIL E/C-501).
- (N) INSTALL SD MANHOLE OR INLET, TYP (SEE SHEETS PP-301 TO PP-303).
- (P) PROTECT IN PLACE EXISTING CHAIN LINK FENCE.
- (Q) RELOCATE OR REPLACE WATER METER (SEE SHEET C-102 FOR FURTHER DETAILS).
- (R) PROVIDE 18" MIN WIDE x 6" THICK MIN CONCRETE APRON AROUND BOX. FORM TO MATCH WATERWAY AND DESIGN GRADE OF ASPHALT. DRAIN TO INLET BOX. PROVIDE #4 BAR @ 12" OC EW, MIN
- (S) REMOVE EXISTING ROLLING CHAIN LINK GATE.
- (T) REMOVE EXISTING PAVEMENT AND PLACE 3" NEW ASPHALT. PROOF ROLL SUBGRADE AND REPLACE SOFT SPOTS WITH 8" MIN UBC (SEE SHEET C-103 FOR EXTENTS).
- (U) SLIDING GATE OPENER WITH BATTERY BACKUP COMPATIBLE WITH CANTILEVER GATE.
- (V) POLE MOUNTED KEYPAD COMPATIBLE WITH CANTILEVER GATE OPENER.
- (W) INSTALL 6" CONCRETE SLAB PER DETAIL D/C-501.
- (X) INSTALL TRANSFORMER AND TRANSFORMER VAULT. SEE ELECTRICAL PLANS.
- (Y) INSTALL FREE-STANDING ELECTRICAL PANEL WITH METER, DISCONNECT & CT PANEL. SEE ELECTRICAL PLANS.

FILE NAME: PROJECTS\126 - SOUTH SALT LAKE CITY\42.200 - ZELLER AND DOWNTOWN SEWER IMPROVEMENTS\CAD\2 - DOWNTOWN AND PUMP STATION\C-101 SITE & DEMO PLAN.DWG
FILE DATE: 4.16.2024, 12:56:28 (MAJ)

LICENSED PROFESSIONAL ENGINEER
4/19/24
No. 5052482
GREGORY S. THOMAS
STATE OF UTAH

| | | | | | | |
|---|---|---|---|---|---|---|
| DESIGNED | ACS | 3 | | | | |
| DRAFTED | TPB, MAJ | 2 | | | | |
| CHECKED | GST | 1 | | | | |
| DATE | APRIL 2024 | NO. | DATE | REVISIONS | BY | APVD. |

HANSEN ALLEN & LUCE inc ENGINEERS

SCALE: AS SHOWN

SOUTH SALT LAKE

DOWNTOWN SEWER IMPROVEMENTS AND PUMP STATION
CIVIL
SITE AND DEMOLITION PLAN

SHEET C-101

126.42.300

7/04

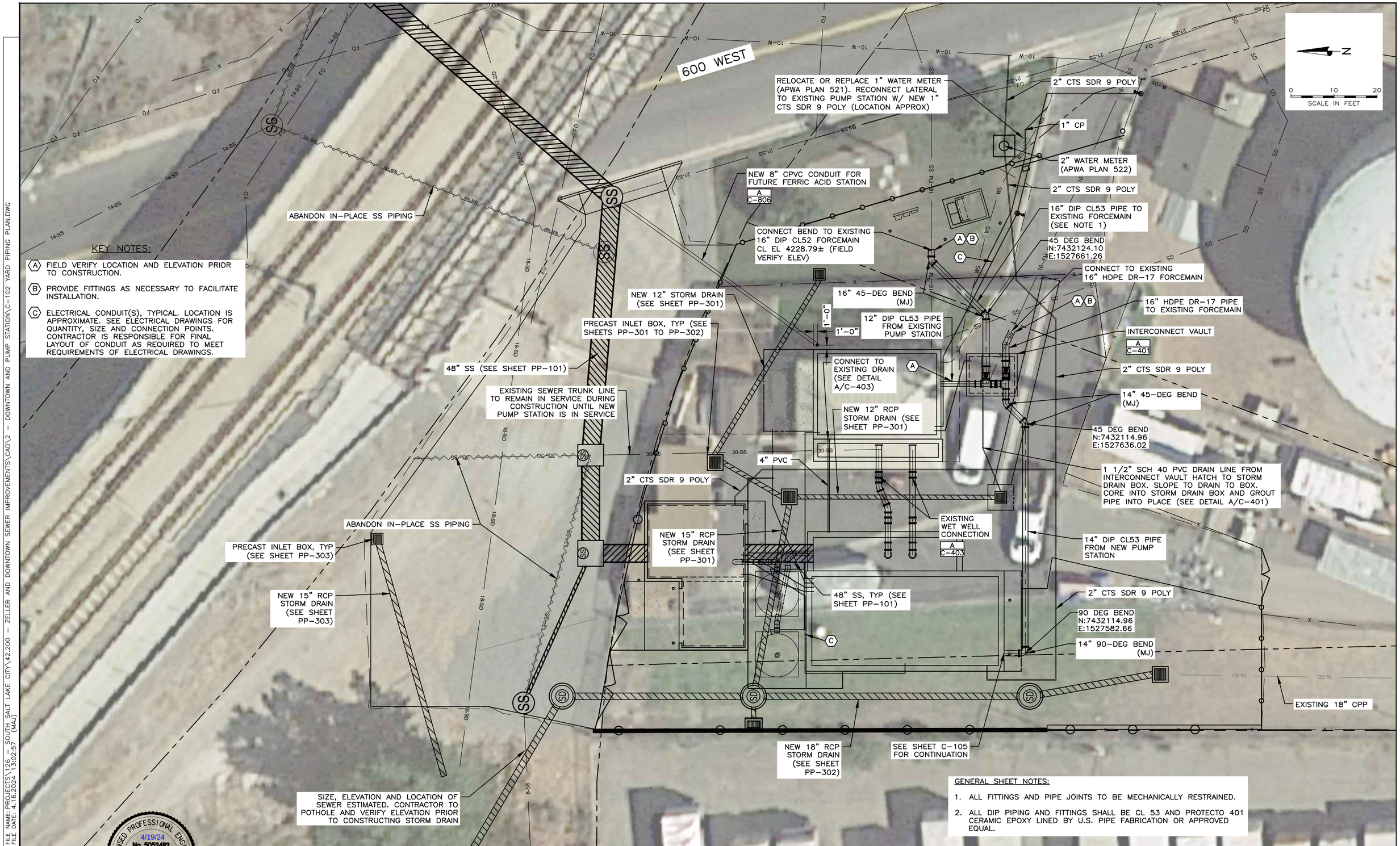


KEY NOTES:

(A) FIELD VERIFY LOCATION AND ELEVATION PRIOR TO CONSTRUCTION.

(B) PROVIDE FITTINGS AS NECESSARY TO FACILITATE INSTALLATION.

(C) ELECTRICAL CONDUIT(S), TYPICAL. LOCATION IS APPROXIMATE. SEE ELECTRICAL DRAWINGS FOR QUANTITY, SIZE AND CONNECTION POINTS. CONTRACTOR IS RESPONSIBLE FOR FINAL LAYOUT OF CONDUIT AS REQUIRED TO MEET REQUIREMENTS OF ELECTRICAL DRAWINGS.

GENERAL SHEET NOTES:

1. ALL FITTINGS AND PIPE JOINTS TO BE MECHANICALLY RESTRAINED.
2. ALL DIP PIPING AND FITTINGS SHALL BE CL 53 AND PROTECTO 401 CERAMIC EPOXY LINED BY U.S. PIPE FABRICATION OR APPROVED EQUAL.

LICENSED PROFESSIONAL ENGINEER
4/19/24
No. 5052482
GREGORY S. THOMAS
STATE OF UTAH
PROJECT ENGINEER

HANSEN ALLEN & LUCE inc ENGINEERS

| | | | | | |
|---|---|---|---|---|---|
| DESIGNED | ACS | 3 | | | |
| DRAFTED | TPB, MAJ | 2 | | | |
| CHECKED | GST | 1 | | | |
| DATE | APRIL 2024 | NO. | DATE | REVISIONS | BY APVD. |

SCALE: AS SHOWN

SOUTH SALT LAKE

DOWNTOWN SEWER IMPROVEMENTS AND PUMP STATION
CIVIL
YARD PIPING PLAN

SHEET C-102

126.42.300

FILE NAME: PROJECTS\126 - SOUTH SALT LAKE CITY\42.200 - ZELLER AND DOWNTOWN SEWER IMPROVEMENTS\CAD\2 - DOWNTOWN AND PUMP STATION\C-102 YARD PIPING PLAN.DWG
FILE DATE: 4.16.2024, 13:02:57 (MAJ)

7/04

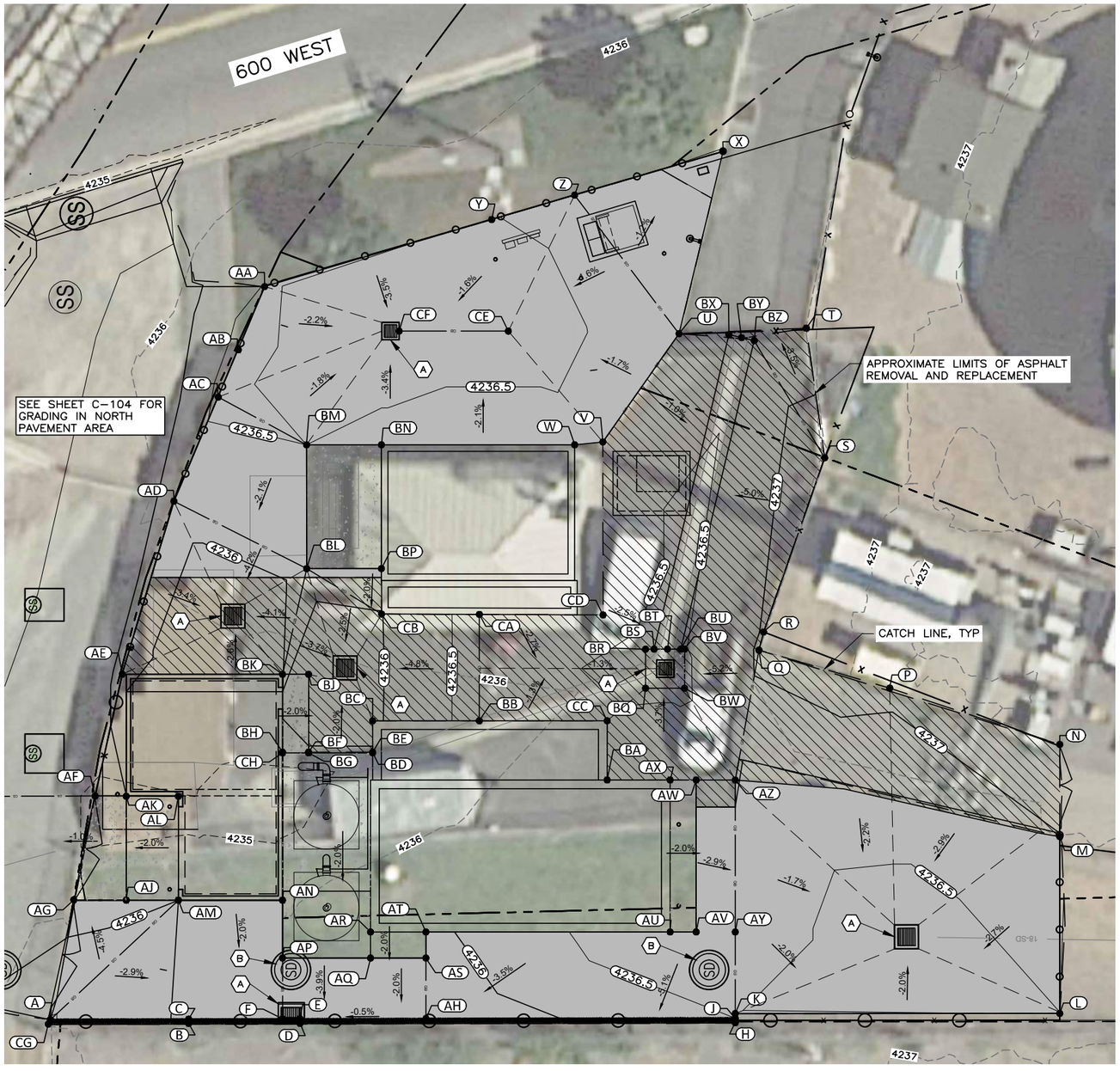


| POINT ID | NORTHING | EASTING | ELEVATION | DESCRIPTION |
|---|---|---|---|---|
| A | 7,432,215.06 | 1,527,565.03 | 4236.53 | EOP |
| B | 7,432,193.82 | 1,527,564.45 | 4236.68 | TBC |
| C | 7,432,193.83 | 1,527,565.12 | 4235.92 | EOP |
| D | 7,432,176.75 | 1,527,564.47 | 4236.68 | TBC |
| E | 7,432,176.75 | 1,527,565.15 | 4235.51 | FG |
| F | 7,432,179.42 | 1,527,565.15 | 4235.51 | FG |
| H | 7,432,109.91 | 1,527,564.57 | 4236.68 | TBC |
| J | 7,432,109.91 | 1,527,565.25 | 4236.50 | EOP |
| K | 7,432,109.91 | 1,527,565.97 | 4236.51 | EOP |
| L | 7,432,060.08 | 1,527,566.00 | 4236.50 | EOP |
| M | 7,432,060.08 | 1,527,593.13 | 4236.99 | EOP |
| N | 7,432,060.08 | 1,527,607.28 | 4237.34 | EOP |
| P | 7,432,086.19 | 1,527,615.92 | 4237.08 | EOP |
| Q | 7,432,106.26 | 1,527,621.76 | 4237.04 | EOP |
| R | 7,432,105.56 | 1,527,624.54 | 4237.03 | EOP |
| S | 7,432,096.18 | 1,527,651.27 | 4237.33 | EOP |
| T | 7,432,099.00 | 1,527,671.18 | 4236.65 | EOP |
| U | 7,432,118.54 | 1,527,670.33 | 4236.71 | MATCH EX |
| V | 7,432,130.24 | 1,527,653.70 | 4236.64 | EOP |
| W | 7,432,134.56 | 1,527,653.28 | 4236.69 | EOP |
| X | 7,432,111.77 | 1,527,698.31 | 4236.42 | MATCH EX |
| Y | 7,432,147.30 | 1,527,687.84 | 4236.49 | EOP |
| Z | 7,432,134.57 | 1,527,691.60 | 4236.62 | EOP |
| AA | 7,432,182.18 | 1,527,677.56 | 4236.61 | EOP |
| AB | 7,432,186.20 | 1,527,667.86 | 4236.63 | EOP |
| AC | 7,432,189.29 | 1,527,660.59 | 4236.60 | EOP |
| AD | 7,432,196.09 | 1,527,644.62 | 4236.17 | EOP |
| AE | 7,432,204.03 | 1,527,618.04 | 4236.11 | EOP |
| AF | 7,432,208.20 | 1,527,599.37 | 4235.79 | EOP |
| AG | 7,432,211.48 | 1,527,583.43 | 4235.76 | EOP |
| AH | 7,432,157.40 | 1,527,565.18 | 4235.61 | EOP |
| AJ | 7,432,203.42 | 1,527,583.37 | 4235.84 | EOP/TOC |
| AK | 7,432,203.42 | 1,527,599.32 | 4235.84 | EOP/TOC |
| AL | 7,432,195.42 | 1,527,599.32 | 4236.00 | TOC |
| AM | 7,432,195.42 | 1,527,583.37 | 4236.00 | EOP/TOC |
| AN | 7,432,179.42 | 1,527,583.37 | 4235.97 | EOP/TOC |
| AP | 7,432,179.42 | 1,527,574.50 | 4235.79 | EOP/TOC |
| AQ | 7,432,165.91 | 1,527,574.50 | 4235.79 | EOP/TOC |
| AR | 7,432,165.91 | 1,527,578.50 | 4235.87 | TOC |

| POINT ID | NORTHING | EASTING | ELEVATION | DESCRIPTION |
|---|---|---|---|---|
| AS | 7,432,157.41 | 1,527,574.50 | 4235.79 | EOP/TOC |
| AT | 7,432,157.41 | 1,527,578.50 | 4235.87 | EOP/TOC |
| AU | 7,432,119.91 | 1,527,578.50 | 4236.94 | EOP/TOC |
| AV | 7,432,115.91 | 1,527,578.50 | 4236.86 | EOP/TOC |
| AW | 7,432,115.91 | 1,527,601.83 | 4236.86 | EOP/TOC |
| AX | 7,432,119.91 | 1,527,601.83 | 4236.94 | TOC |
| AY | 7,432,109.91 | 1,527,578.50 | 4236.69 | FG |
| AZ | 7,432,109.91 | 1,527,601.81 | 4236.83 | FG |
| BA | 7,432,129.58 | 1,527,601.83 | 4236.94 | EOP |
| BB | 7,432,149.19 | 1,527,610.91 | 4236.70 | EOP |
| BC | 7,432,165.58 | 1,527,610.91 | 4235.92 | EOP |
| BD | 7,432,165.58 | 1,527,606.00 | 4236.42 | TOC |
| BE | 7,432,165.58 | 1,527,606.08 | 4236.02 | EOP |
| BF | 7,432,175.42 | 1,527,606.08 | 4236.02 | EOP/TOC |
| BG | 7,432,175.42 | 1,527,606.00 | 4236.42 | TOC |
| BH | 7,432,179.42 | 1,527,606.08 | 4236.10 | TOC |
| BJ | 7,432,175.42 | 1,527,618.04 | 4235.90 | EOP/TOC |
| BK | 7,432,179.42 | 1,527,618.04 | 4236.00 | EOP/TOC |
| BL | 7,432,175.72 | 1,527,634.27 | 4236.12 | EOP |
| BM | 7,432,175.73 | 1,527,653.27 | 4236.50 | EOP |
| BN | 7,432,164.23 | 1,527,653.28 | 4236.69 | EOP |
| BP | 7,432,164.24 | 1,527,634.27 | 4236.13 | EOP |
| BQ | 7,432,123.68 | 1,527,615.91 | 4236.41 | EOP/TOC |
| BR | 7,432,123.68 | 1,527,621.91 | 4236.42 | EOP/TOC |
| BS | 7,432,122.37 | 1,527,621.91 | 4236.39 | EOP/TOC |
| BT | 7,432,120.32 | 1,527,621.91 | 4236.36 | FL |
| BU | 7,432,118.26 | 1,527,621.91 | 4236.44 | EOP/TOC |
| BV | 7,432,117.68 | 1,527,621.91 | 4236.47 | EOP/TOC |
| BW | 7,432,117.68 | 1,527,615.91 | 4236.44 | EOP/TOC |
| BX | 7,432,110.89 | 1,527,670.19 | 4236.60 | EOP/TOC |
| BY | 7,432,108.94 | 1,527,669.72 | 4236.52 | FL |
| BZ | 7,432,106.99 | 1,527,669.26 | 4236.60 | EOP/TOC |
| CA | 7,432,149.19 | 1,527,627.24 | 4236.70 | EOP |
| CB | 7,432,164.21 | 1,527,627.30 | 4235.99 | EOP |
| CC | 7,432,129.58 | 1,527,610.91 | 4236.58 | EOP |
| CD | 7,432,130.21 | 1,527,627.16 | 4236.64 | MATCH EX |
| CE | 7,432,144.75 | 1,527,670.72 | 4236.32 | FG |
| CF | 7,432,161.51 | 1,527,670.72 | 4236.15 | FG |
| CG | 7,432,215.39 | 1,527,564.36 | 4236.68 | TBC |
| CH | 7,432,179.42 | 1,527,606.00 | 4236.42 | TOC |

LEGEND:

REMOVE AND REPLACE ASPHALT (4" ASPHALT OVER 8" UBC MIN)

PLACE NEW ASPHALT (4" ASPHALT OVER 8" UBC MIN)

KEY NOTES:

(A) GRADE ASPHALT TO MATCH BOX RIM ELEVATION (SEE SHEETS PP-201 & PP-202).

(B) SET MANHOLE LID TO MATCH FINISH ELEVATION OF ASPHALT.

FILE NAME: PROJECTS\126 - SOUTH SALT LAKE CITY\42.200 - ZELLER AND DOWNTOWN SEWER IMPROVEMENTS\CAD\2 - DOWNTOWN AND PUMP STATION\C-103 GRADING PLAN 1.DWG
FILE DATE: 4.16.2024 13:10:13 (MAJ)

7/04

HANSEN ALLEN & LUCE Inc. ENGINEERS

LICENSED PROFESSIONAL ENGINEER
4/19/24
No. 5052482
GREGORY S. TUCKER
REGISTERED ENGINEER

| | | | | | |
|---|---|---|---|---|---|
| DESIGNED | ACS | 3 | | | |
| DRAFTED | MAJ | 2 | | | |
| CHECKED | GST | 1 | | | |
| DATE | APRIL 2024 | NO. | DATE | REVISIONS | BY / APVD. |

SCALE: AS SHOWN

SOUTH SALT LAKE

DOWNTOWN SEWER IMPROVEMENTS AND PUMP STATION
CIVIL
GRADING PLAN 1

SHEET C-103

126.42.300

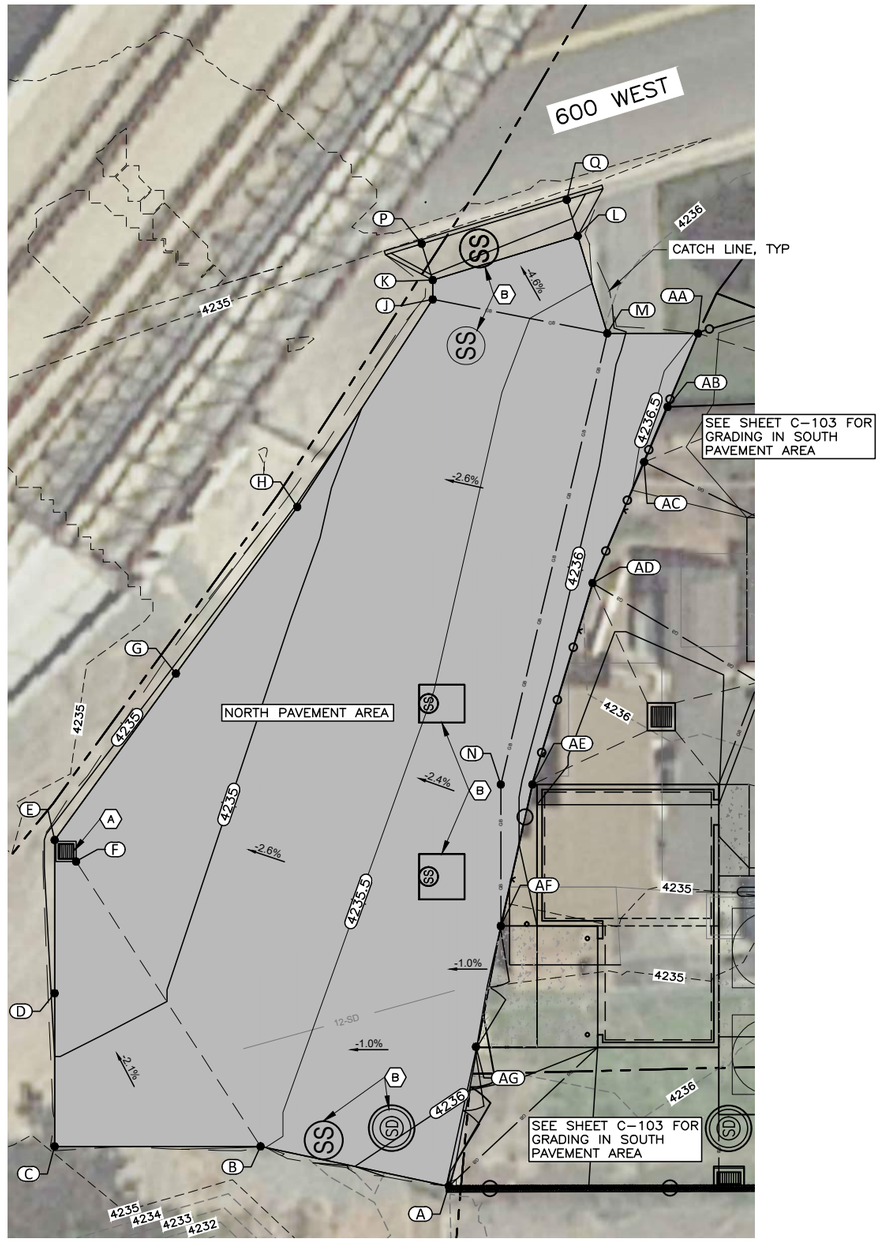


| POINT ID | NORTHING | EASTING | ELEVATION | DESCRIPTION |
|---|---|---|---|---|
| A | 7,432,215.06 | 1,527,565.03 | 4236.53 | EOP |
| B | 7,432,239.90 | 1,527,570.30 | 4235.47 | EOP |
| C | 7,432,267.08 | 1,527,570.30 | 4235.21 | EOP |
| D | 7,432,267.08 | 1,527,590.51 | 4234.85 | EOP |
| E | 7,432,267.08 | 1,527,610.72 | 4234.55 | EOP |
| F | 7,432,264.24 | 1,527,607.89 | 4234.55 | EOP |
| G | 7,432,251.07 | 1,527,632.69 | 4234.72 | EOP |
| H | 7,432,235.06 | 1,527,654.66 | 4234.90 | EOP |
| J | 7,432,217.19 | 1,527,682.05 | 4235.11 | EOP |
| K | 7,432,217.19 | 1,527,684.60 | 4235.06 | EOP |
| L | 7,432,198.05 | 1,527,690.42 | 4235.20 | EOP |
| M | 7,432,194.15 | 1,527,677.56 | 4235.81 | EOP/GB |
| N | 7,432,208.20 | 1,527,618.04 | 4235.79 | FG/GB |
| P | 7,432,218.64 | 1,527,689.38 | 4234.64 | TBC |
| Q | 7,432,199.50 | 1,527,695.18 | 4234.78 | TBC |
| AA | 7,432,182.18 | 1,527,677.56 | 4236.61 | EOP |
| AB | 7,432,186.20 | 1,527,667.86 | 4236.63 | EOP |
| AC | 7,432,189.29 | 1,527,660.59 | 4236.60 | EOP |
| AD | 7,432,196.09 | 1,527,644.62 | 4236.17 | EOP |
| AE | 7,432,204.03 | 1,527,618.04 | 4236.11 | EOP |
| AF | 7,432,208.20 | 1,527,599.37 | 4235.79 | EOP/GB |
| AG | 7,432,211.48 | 1,527,583.43 | 4235.76 | EOP |

LEGEND:

PLACE NEW ASPHALT
(4" ASPHALT OVER 8" UBC MIN)

KEY NOTES:

(A) GRADE ASPHALT TO MATCH BOX RIM ELEVATION (SEE SHEET PP-203).

(B) SET MANHOLE LID TO MATCH FINISH ELEVATION OF ASPHALT.

FILE NAME: PROJECTS\126 - SOUTH SALT LAKE CITY\42.200 - ZELLER AND DOWNTOWN SEWER IMPROVEMENTS\CAD\2 - DOWNTOWN AND PUMP STATION\C-104 GRADING PLAN II.DWG
FILE DATE: 4.17.2024 | 16:56:37 (MAJ)

LICENSED PROFESSIONAL ENGINEER
4/19/24
No. 5052482
GREGORY S. THOMAS
STATE OF UTAH

HANSEN ALLEN & LUCE, Inc. ENGINEERS

| | | | | | | |
|---|---|---|---|---|---|---|
| DESIGNED | ACS | 3 | | | | |
| DRAFTED | MAJ | 2 | | | | |
| CHECKED | GST | 1 | | | | |
| DATE | APRIL 2024 | NO. | DATE | REVISIONS | BY | APVD. |

SCALE: AS SHOWN

SOUTH SALT LAKE

DOWNTOWN SEWER IMPROVEMENTS AND PUMP STATION
CIVIL
GRADING PLAN II

SHEET C-104

126.42.300

7/04

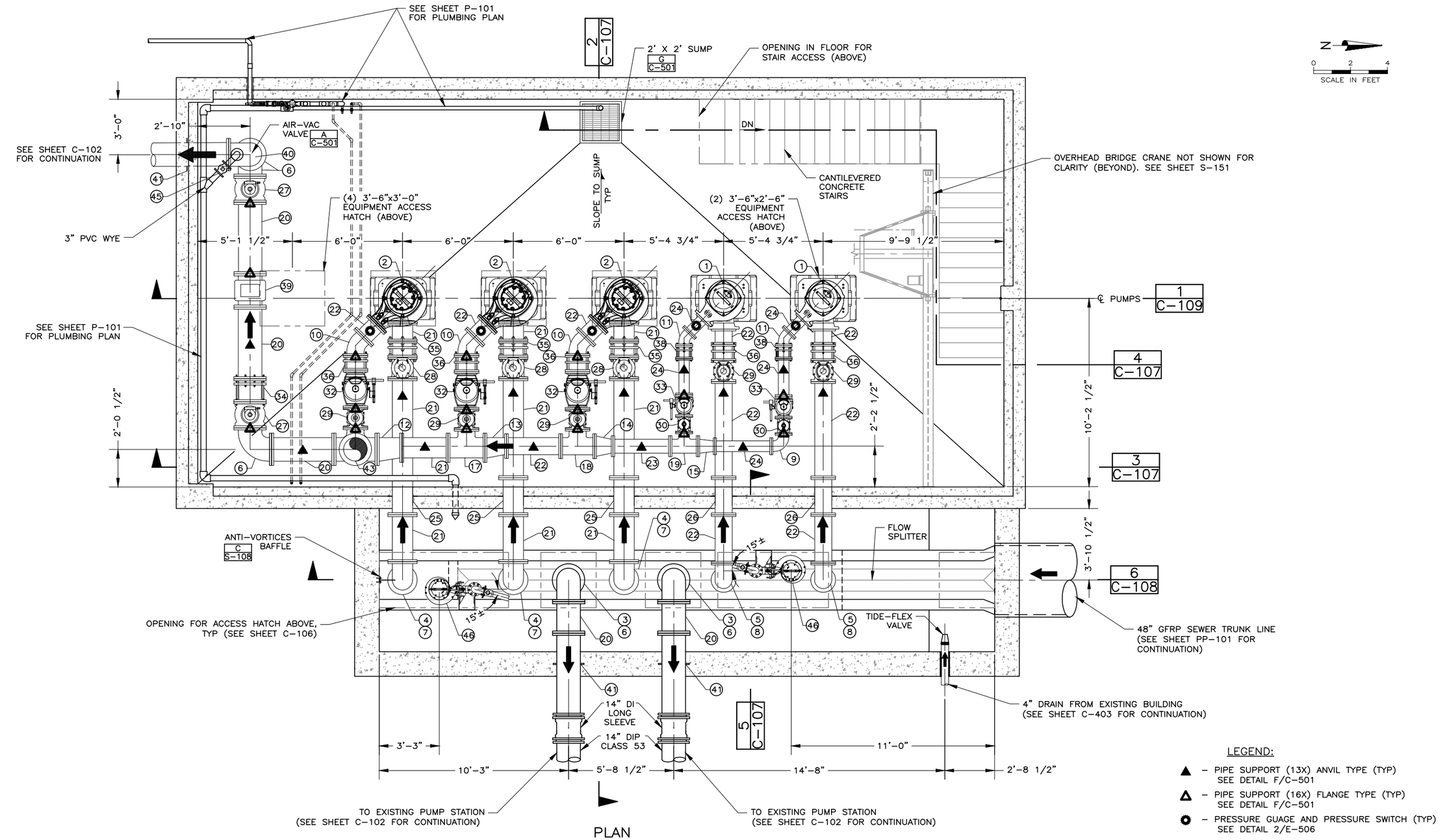


PLAN

LEGEND:

- ▲ – PIPE SUPPORT (13X) ANVIL TYPE (TYP) SEE DETAIL F/C-501
- △ – PIPE SUPPORT (16X) FLANGE TYPE (TYP) SEE DETAIL F/C-501
- ◉ – PRESSURE GUAGE AND PRESSURE SWITCH (TYP) SEE DETAIL 2/E-506

GENERAL SHEET NOTES:

1. SEE SHEET C-111 FOR PUMPHOUSE PIPE, FITTING AND EQUIPMENT SCHEDULE.
2. ALL DIP PIPING AND FITTINGS SHALL BE CL 53 AND PROTECTO 401 CERAMIC EPOXY LINED BY U.S. PIPE FABRICATION OR APPROVED EQUAL.
3. INTERIOR SURFACE OF WET WELL, INCLUDING PIPING SHALL BE COATED WITH RAVEN 405 LINING SYSTEM (NO SUBSTITUTION PERMITTED) WITH A MINIMUM THICKNESS OF 150 MILS. COATING SHALL BE FIELD APPLIED PRIOR TO THE INTRODUCTION OF SANITARY SEWER FLOWS. COATING SHALL BE AS PER MANUFACTURER RECOMMENDATIONS INCLUDING SURFACE PREPARATION. CONTRACTOR SHALL PROVIDE THIRD PARTY TESTING OF INSTALLED COATING AS PER MANUFACTURER RECOMMENDATIONS INCLUDING HIGH VOLTAGE SPARK TESTING (HOLIDAY TESTING) AND ADHESION TESTING.

LICENSED PROFESSIONAL ENGINEER
4/19/24
No. 5052482
GREGORY S. TWELVES
STATE OF UTAH

HANSEN ALLEN & LUCE inc ENGINEERS

| | | | | | | |
|---|---|---|---|---|---|---|
| DESIGNED | ACS | 3 | | | | |
| DRAFTED | BKC, MAJ | 2 | | | | |
| CHECKED | GST | 1 | | | | |
| DATE | APRIL 2024 | NO. | DATE | REVISIONS | BY | APVD. |

SCALE: AS SHOWN

SOUTH SALT LAKE

DOWNTOWN SEWER IMPROVEMENTS AND PUMP STATION
CIVIL
PUMPHOUSE DRY & WET WELL PLAN

SHEET C-105

126.42.300

FILE NAME: PROJECTS\126 – SOUTH SALT LAKE CITY\42.200 – ZELLER AND DOWNTOWN SEWER IMPROVEMENTS\CAD\2 – DOWNTOWN AND PUMP STATION\C-105 PUMPHOUSE DRY & WET WELL PLAN.DWG
FILE DATE: 4.12.2024 11:33:57 (MAJ)
7/04

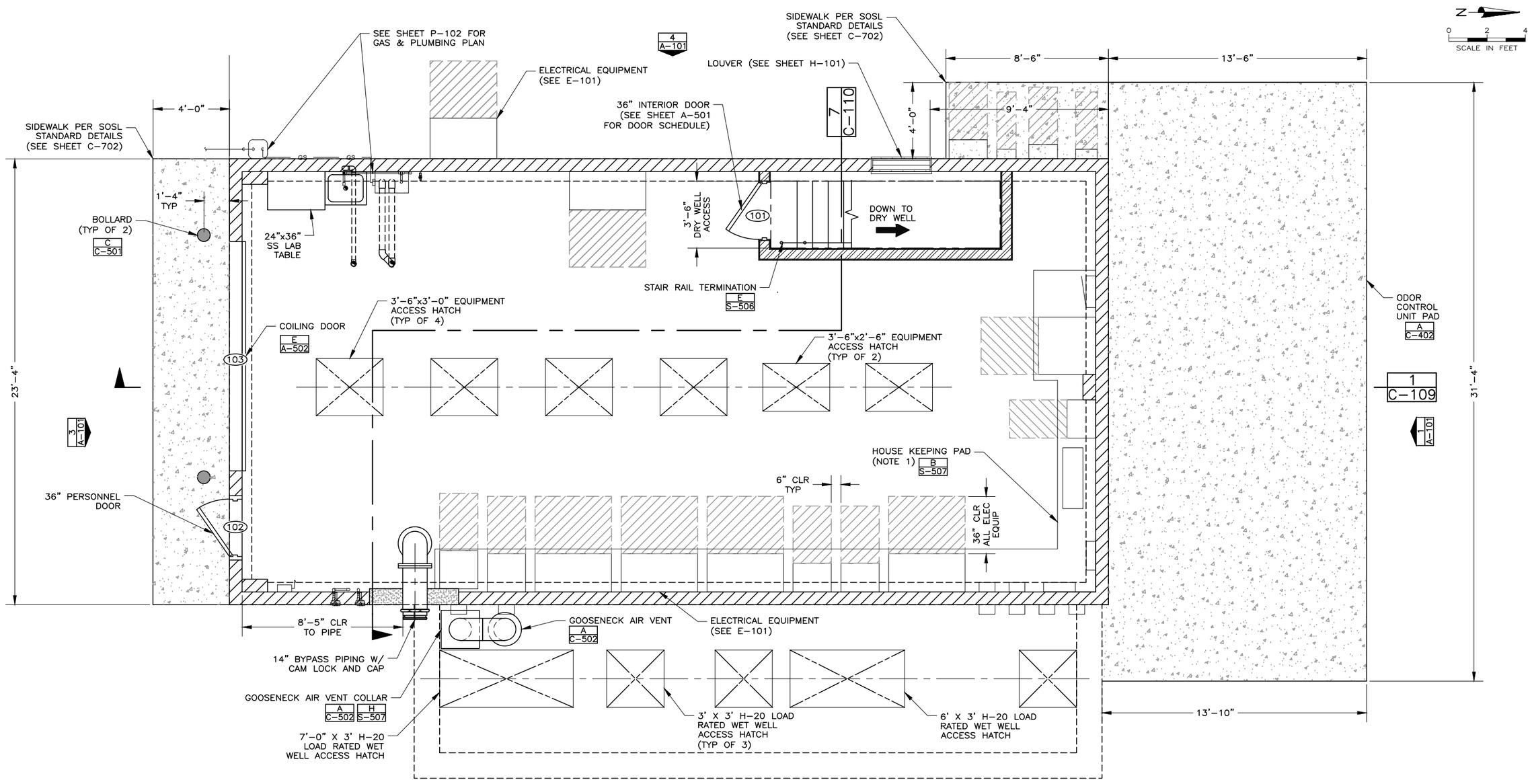


## PLAN

GENERAL SHEET NOTES:
1. SEE SHEET S-105 FOR DIMENSIONS OF HOUSEKEEPING PADS.

FILE NAME:PROJECTS\126 - SOUTH SALT LAKE CITY\42.200 - ZELLER AND DOWNTOWN SEWER IMPROVEMENTS\CAD\2 - DOWNTOWN AND PUMP STATION\C-106 PUMPHOUSE BLDG FLOOR PLAN.DWG
FILE DATE: 4.17.2024 17:16:28 (MAJ)

LICENSED PROFESSIONAL ENGINEER
4/19/24
No. 5052482
GREGORY S. [illegible]
STATE OF UTAH

HANSEN ALLEN & LUCE inc ENGINEERS

| | | | | | |
|---|---|---|---|---|---|
| DESIGNED | ACS | 3 | | | |
| DRAFTED | BKC, MAJ | 2 | | | |
| CHECKED | GST | 1 | | | |
| DATE | APRIL 2024 | NO. | DATE | REVISIONS | BY APVD. |

SCALE: AS SHOWN

SOUTH SALT LAKE

DOWNTOWN SEWER IMPROVEMENTS AND PUMP STATION
CIVIL
PUMPHOUSE BUILDING FLOOR PLAN

SHEET C-106
126.42.300

7/04

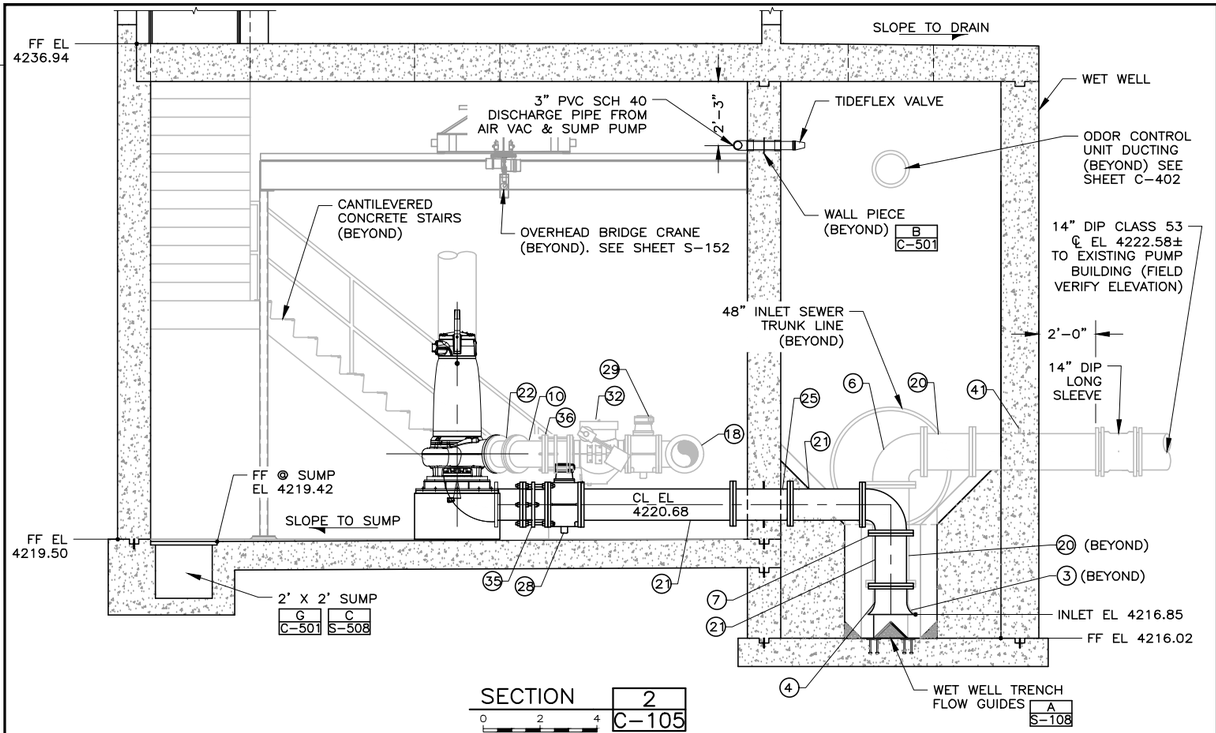


SECTION 2 C-105
0 2 4
SCALE IN FEET

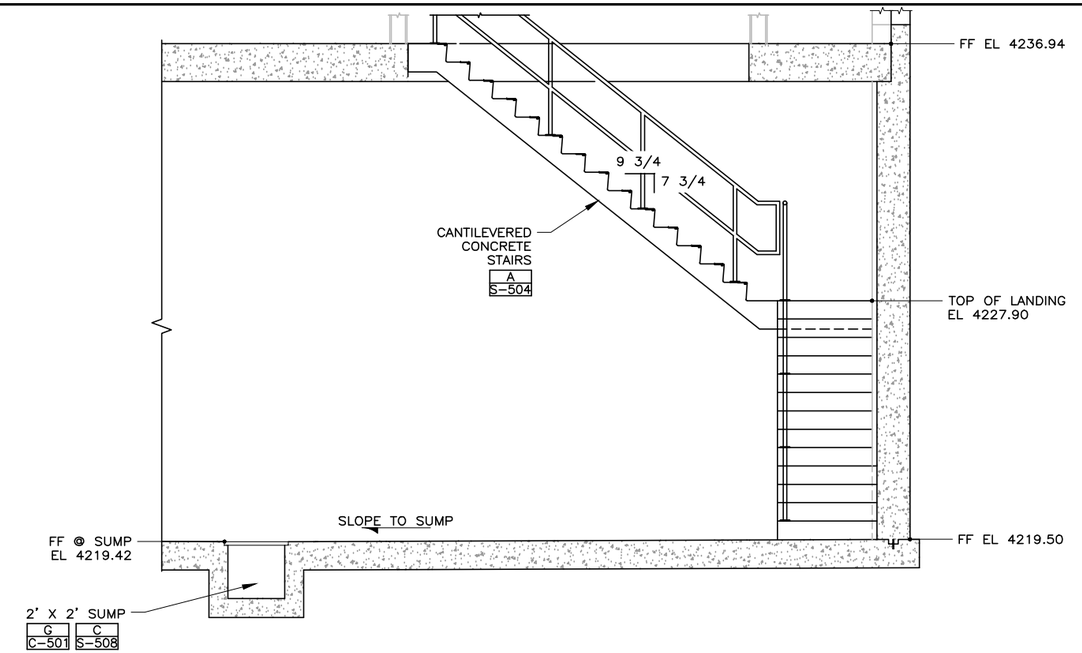


SECTION 4 C-105
0 2 4
SCALE IN FEET

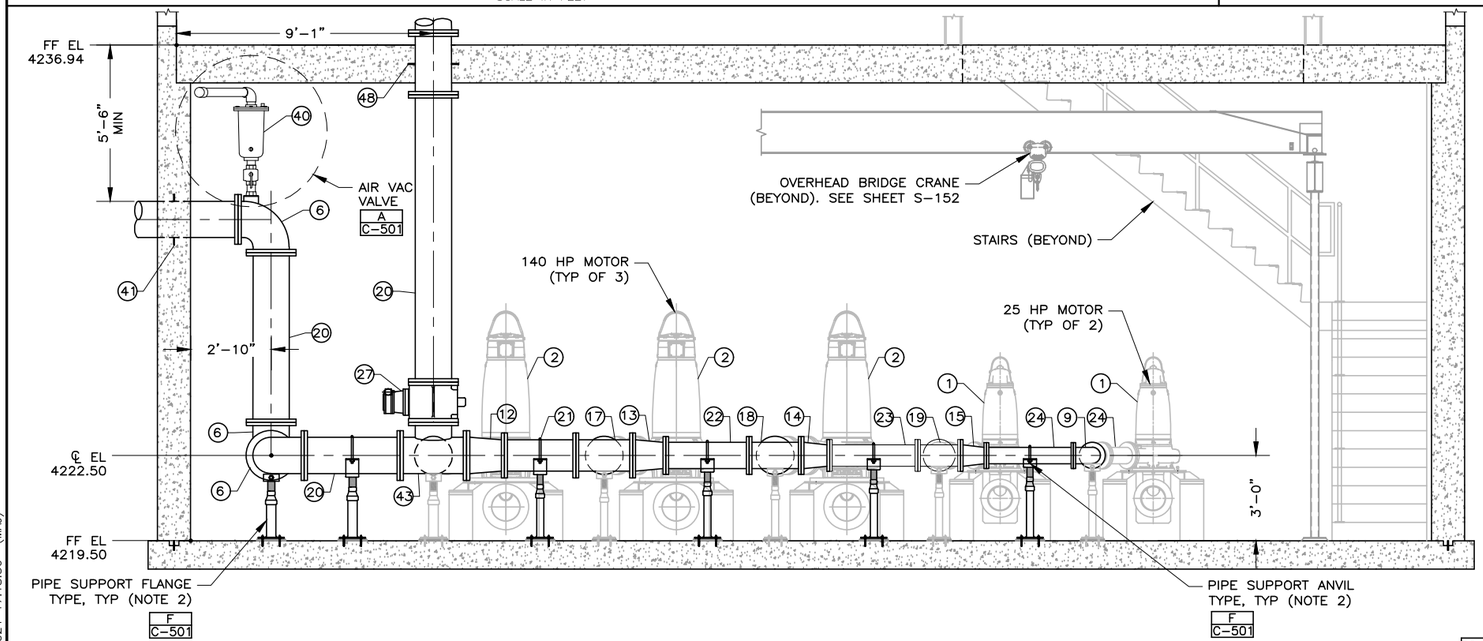


SECTION 3 C-105
0 2 4
SCALE IN FEET

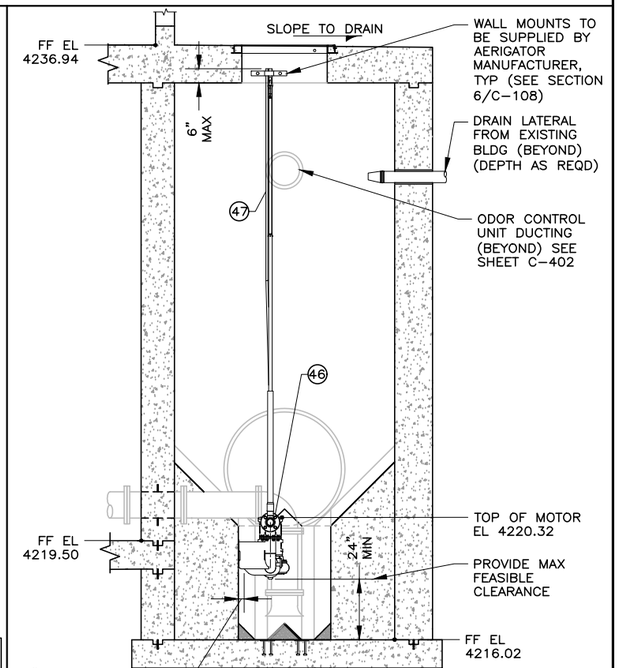


SECTION 5 C-105
0 2 4
SCALE IN FEET

GENERAL SHEET NOTES:
1. SEE SHEET C-111 FOR PUMPHOUSE PIPE, FITTING AND EQUIPMENT SCHEDULE.
2. SEE SHEET C-105 FOR THE LOCATION AND QUANTITY OF ALL PIPE SUPPORTS IN THE DRY WELL.

LICENSED PROFESSIONAL ENGINEER
4/19/24
No. 5052482
GREGORY S. THURGOOD
STATE OF UTAH

HANSEN ALLEN & LUCE Inc ENGINEERS

| | | | | | | |
|---|---|---|---|---|---|---|
| DESIGNED | ACS | 3 | | | | |
| DRAFTED | BKC, MAJ | 2 | | | | |
| CHECKED | GST | 1 | | | | |
| DATE | APRIL 2024 | NO. | DATE | REVISIONS | BY | APVD. |

SCALE AS SHOWN

SOUTH SALT LAKE

DOWNTOWN SEWER IMPROVEMENTS AND PUMP STATION
CIVIL
DRY WELL SECTIONS

SHEET C-107
126.42.300

FILE NAME: PROJECTS\126 - SOUTH SALT LAKE CITY\42.200 - ZELLER AND DOWNTOWN SEWER IMPROVEMENTS\CAD\2 - DOWNTOWN AND PUMP STATION\C-107 DRY WELL SECTIONS.DWG
FILE DATE: 4/17/2024 17:18:36 (MAJ)
7/04

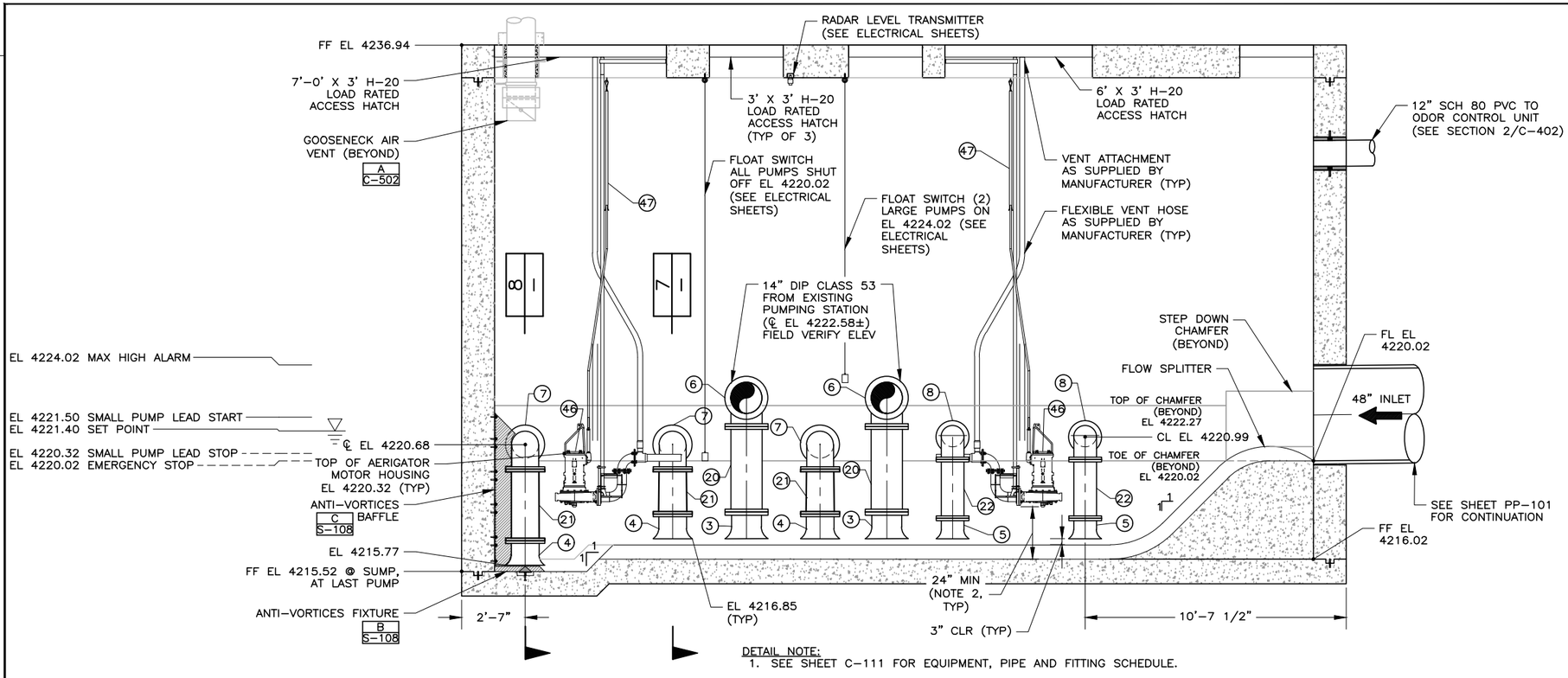


DETAIL NOTE:
1. SEE SHEET C-111 FOR EQUIPMENT, PIPE AND FITTING SCHEDULE.
2. PROVIDE MAXIMUM FEASIBLE CLEARANCE WHILE NOT RAISING THE TOP OF THE MOTOR HOUSING ABOVE THE NORMAL LOW WATER LEVEL.

SECTION 6
SCALE IN FEET 0 2 4
C-105

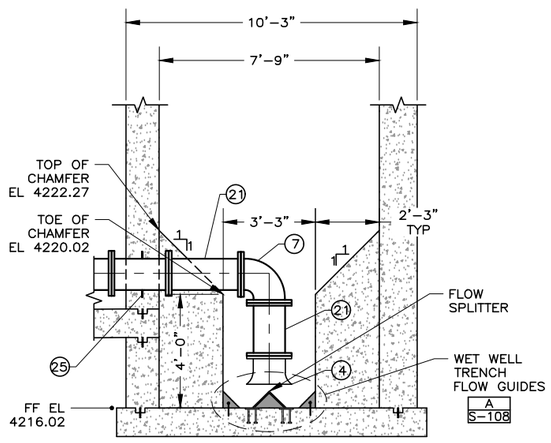


SECTION 7
NTS
—

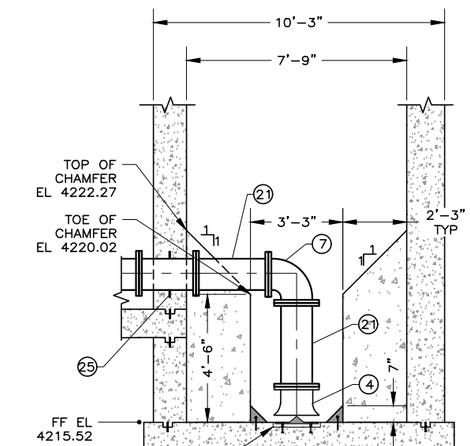


SECTION 8
NTS
—

LICENSED PROFESSIONAL ENGINEER
4/19/24
No. 5052482
GREGORY S. THOMAS
STATE OF UTAH

HANSEN ALLEN & LUCE inc ENGINEERS

| | | | | | | |
|---|---|---|---|---|---|---|
| DESIGNED ACS | 3 | | | | | |
| DRAFTED BKC, MAJ | 2 | | | | | |
| CHECKED GST | 1 | | | | | |
| DATE APRIL 2024 | NO. | DATE | REVISIONS | BY | APVD. | |

SCALE AS SHOWN

SOUTH SALT LAKE

DOWNTOWN SEWER IMPROVEMENTS AND PUMP STATION
CIVIL
WET WELL SECTIONS

SHEET C-108
126.42.300

FILE NAME: PROJECTS\126 - SOUTH SALT LAKE CITY\42.200 - ZELLER AND DOWNTOWN SEWER IMPROVEMENTS\CAD\2 - DOWNTOWN AND PUMP STATION\C-108 WET WELL SECTIONS.DWG
FILE DATE: 3.15.2024 14:26:13 (MAJ)

7/04

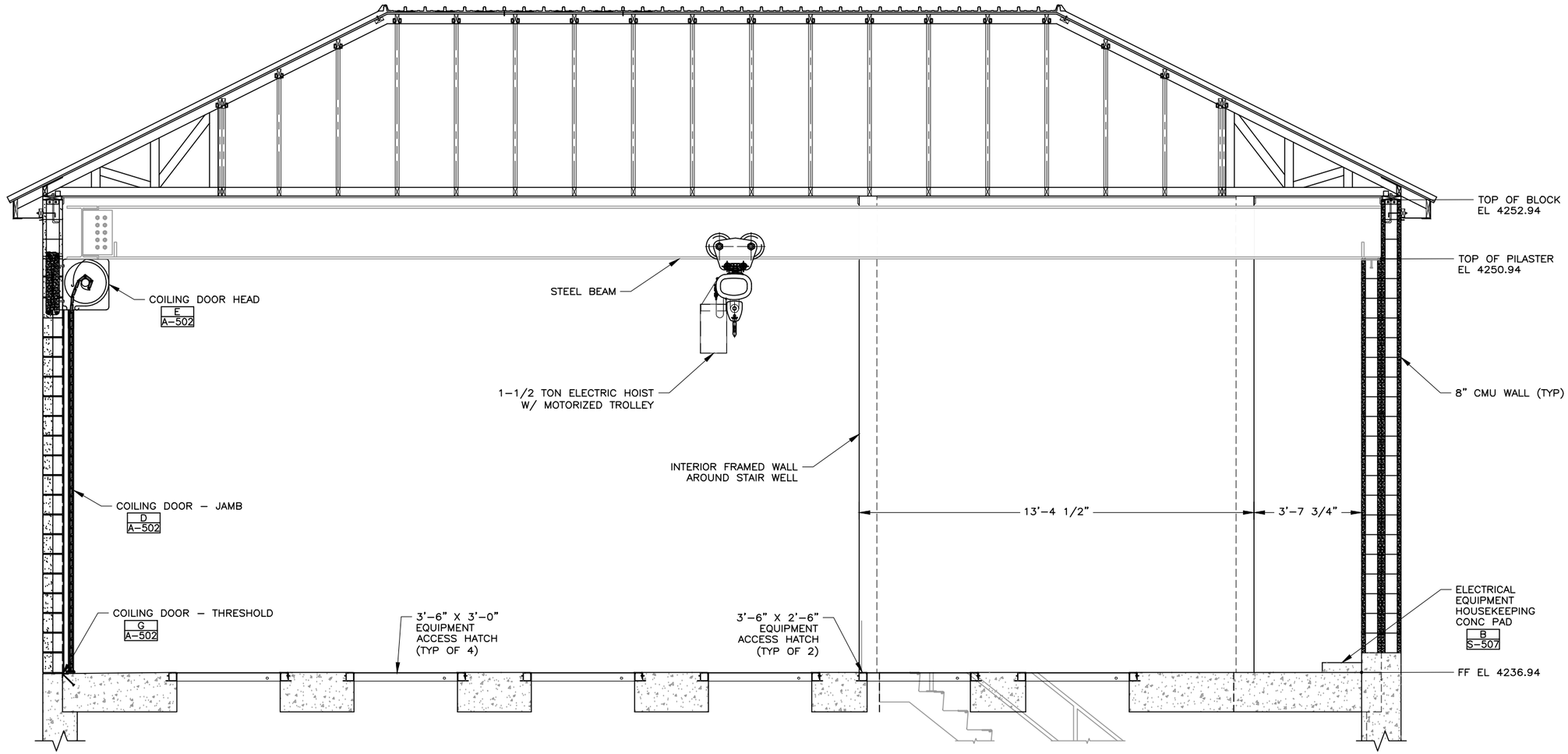


SECTION 1 C-105 | 1 C-106

0 1 2
SCALE IN FEET

FILE NAME:PROJECTS\126 - SOUTH SALT LAKE CITY\42.200 - ZELLER AND DOWNTOWN SEWER IMPROVEMENTS\CAD\2 - DOWNTOWN AND PUMP STATION\C-109 PUMPHOUSE BLDG SECTIONS 1.DWG
FILE DATE: 3.5.2024 14:28:11 (MAJ)

7/04

HANSEN ALLEN & LUCE inc ENGINEERS

LICENSED PROFESSIONAL ENGINEER
4/19/24
No. 5052482
GREGORY S. [illegible]
STATE OF UTAH

| | | | | | | |
|---|---|---|---|---|---|---|
| DESIGNED | ACS | 3 | | | | |
| DRAFTED | BKC, MAJ | 2 | | | | |
| CHECKED | GST | 1 | | | | |
| DATE | APRIL 2024 | NO. | DATE | REVISIONS | BY | APVD. |

SCALE: AS SHOWN

SOUTH SALT LAKE

DOWNTOWN SEWER IMPROVEMENTS AND PUMP STATION
CIVIL
PUMPHOUSE BUILDING SECTIONS 1

SHEET C-109

126.42.300

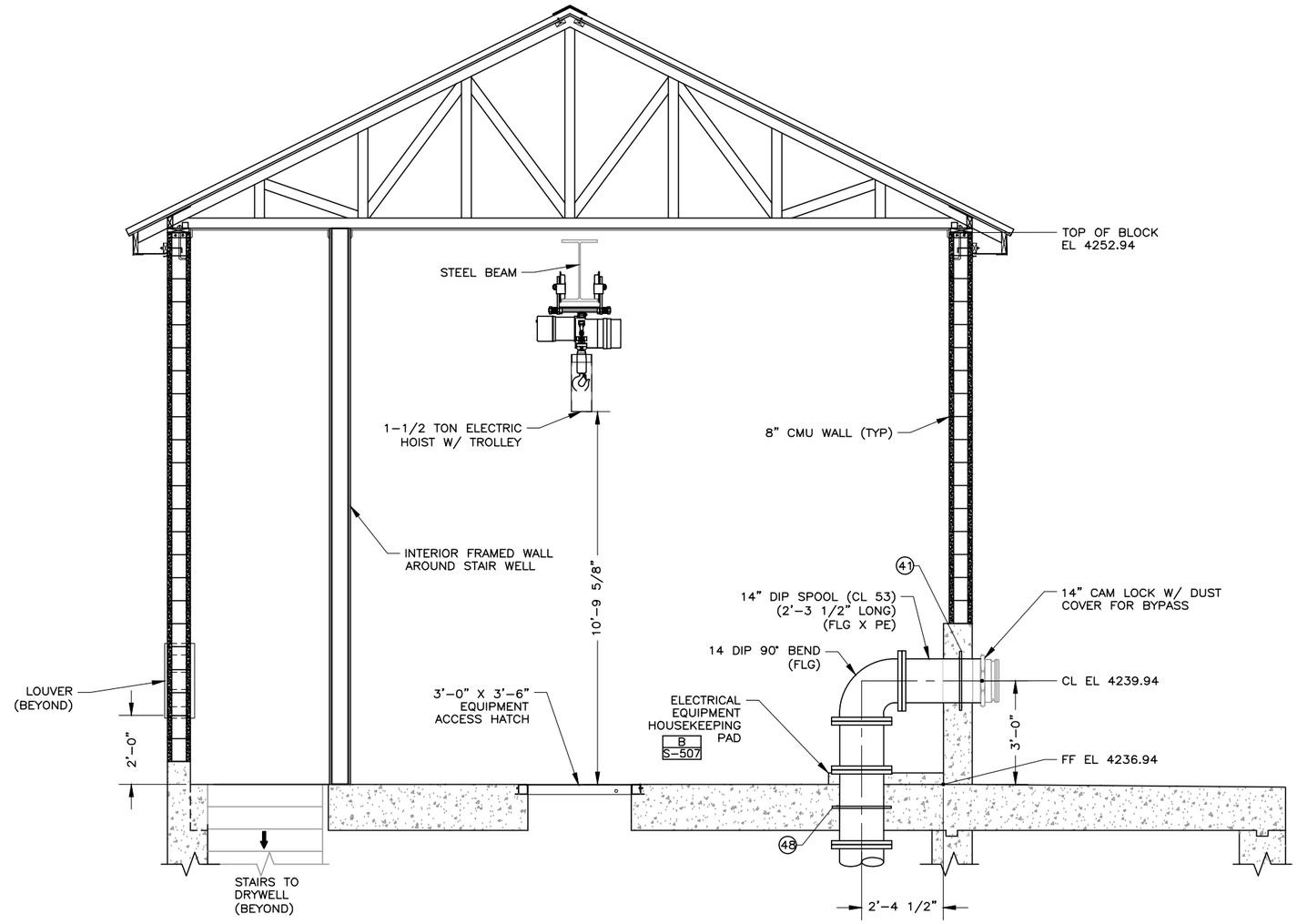


SECTION 7 / C-106

0 1 2
SCALE IN FEET

FILE NAME: PROJECTS\126 - SOUTH SALT LAKE CITY\42.200 - ZELLER AND DOWNTOWN SEWER IMPROVEMENTS\CAD\2 - DOWNTOWN AND PUMP STATION\C-110 PUMPHOUSE BLDG SECTIONS II.DWG
FILE DATE: 3.5.2024 14:29:15 (MAJ)

LICENSED PROFESSIONAL ENGINEER
4/19/24
No. 5052482
GREGORY S. THOMAS
STATE OF UTAH

HANSEN ALLEN & LUCE inc ENGINEERS

| | | | | | | |
|---|---|---|---|---|---|---|
| DESIGNED ACS | 3 | | | | | |
| DRAFTED BKC, MAJ | 2 | | | | | |
| CHECKED GST | 1 | | | | | |
| DATE APRIL 2024 | NO. | DATE | REVISIONS | BY | APVD. | |

SCALE AS SHOWN

SOUTH SALT LAKE

DOWNTOWN SEWER IMPROVEMENTS AND PUMP STATION
CIVIL
PUMPHOUSE BUILDING SECTIONS II

SHEET C-110
126.42.300

7/04

# PIPE, FITTING & EQUIPMENT SCHEDULE

| NO | DESCRIPTION | SIZE | JOINT | NOTE |
|---|---|---|---|---|
| 1 | FLYGT NT 3171 MT 3–436 | 10" SUCTION, 6" DISCHARGE | FLG | ROTATE DISCHARGE 45 DEG FROM SUCTION; NO SUBSTITUTION PERMITTED |
| 2 | FLYGT NT 3315 MT 3–635 | 12" SUCTION, 10" DISCHARGE | FLG | ROTATE DISCHARGE 45 DEG FROM SUCTION; NO SUBSTITUTION PERMITTED |
| 3 | SUCTION BELL | 14"X21" | FLG | AMERICAN DUCTILE IRON SPECIALS FLARE CASTINGS |
| 4 | SUCTION BELL | 12"X19" | FLG | AMERICAN DUCTILE IRON SPECIALS FLARE CASTINGS |
| 5 | SUCTION BELL | 10"X16" | FLG | AMERICAN DUCTILE IRON SPECIALS FLARE CASTINGS |
| 6 | 90 DEG BEND | 14" | FLG | 3" THD TAP FOR AIR VENT WHERE SHOWN ON PLANS |
| 7 | 90 DEG BEND | 12" | FLG | |
| 8 | 90 DEG BEND | 10" | FLG | |
| 9 | 90 DEG BEND | 6" | FLG | |
| 10 | 45 DEG BEND | 10" | FLG | |
| 11 | 45 DEG BEND | 6" | FLG | |
| 12 | REDUCER | 12"X14" | FLG | ECCENTRIC |
| 13 | REDUCER | 10"X12" | FLG | ECCENTRIC |
| 14 | REDUCER | 8"X10" | FLG | CONCENTRIC |
| 15 | REDUCER | 8"X6" | FLG | CONCENTRIC |
| 16 | NOT USED | | | |
| 17 | TEE | 12"X10" | FLG | |
| 18 | TEE | 10" | FLG | |
| 19 | TEE | 8"X6" | FLG | |
| 20 | DIP SPOOL (CL 53) | 14" | FLG | FIELD VERIFY LENGTH PRIOR TO FABRICATION |
| 21 | DIP SPOOL (CL 53) | 12" | FLG | FIELD VERIFY LENGTH PRIOR TO FABRICATION |
| 22 | DIP SPOOL (CL 53) | 10" | FLG | FIELD VERIFY LENGTH PRIOR TO FABRICATION |
| 23 | DIP SPOOL (CL 53) | 8" | FLG | FIELD VERIFY LENGTH PRIOR TO FABRICATION |
| 24 | DIP SPOOL (CL 53) | 6" | FLG | FIELD VERIFY LENGTH PRIOR TO FABRICATION |
| 25 | DIP THRUST COLLAR (CL 53) | 12" | FLG | FIELD VERIFY LENGTH PRIOR TO FABRICATION |
| 26 | DIP THRUST COLLAR (CL 53) | 10" | FLG | FIELD VERIFY LENGTH PRIOR TO FABRICATION |
| 27 | PLUG VALVE | 14" | FLG | |
| 28 | PLUG VALVE | 12" | FLG | |
| 29 | PLUG VALVE | 10" | FLG | |
| 30 | PLUG VALVE | 6" | FLG | |
| 31 | NOT USED | | | |
| 32 | CHECK VALVE | 10" | FLG | |
| 33 | CHECK VALVE | 6" | FLG | |
| 34 | DISMANTLING JOINT | 14" | FLG | ROMAC DJ400 W/ SS TIE RODS |
| 35 | DISMANTLING JOINT | 12" | FLG | ROMAC DJ400 W/ SS TIE RODS |
| 36 | DISMANTLING JOINT | 10" | FLG | ROMAC DJ400 W/ SS TIE RODS |
| 37 | NOT USED | | | |
| 38 | DISMANTLING JOINT | 6" | FLG | ROMAC DJ400 W/ SS TIE RODS |
| 39 | FLOW METER | 14" | FLG | SIEMANS SITRANS MAG 5100W; NO SUBSTITUTION PERMITTED |
| 40 | AIR/VAC VALVE | NA | THD | APCO SERIES 447 SCAV (3") |
| 41 | DIP THRUST COLLAR (CL 53) | 14" | FLG X PE | FIELD VERIFY LENGTH PRIOR TO FABRICATION |
| 42 | NOT USED | | | |
| 43 | TEE W/ 14" SIDE OUTLET | 14" X 10" X 14" | FLG | |
| 44 | NOT USED | | | |
| 45 | CHECK VALVE | 3" | FLG | VALMATIC SWING–FLEX |
| 46 | LANDIA AERIGATOR DG–I 105 | – | – | ROTATE DISCHARGE ±15° FROM CENTERLINE OF WET WELL |
| 47 | AERIGATOR GUIDE | – | – | GUIDE TO BE SUPPLIED BY MANUFACTURER OF AERIGATOR |
| 48 | DIP THRUST COLLAR (CL 53) | 14" | FLG | FIELD VERIFY LENGTH PRIOR TO FABRICATION |

GENERAL SHEET NOTES:

1. CONTRACTOR SHALL PROVIDE (1) "FLYGT BASIC REPAIR KIT" FOR THE FLYGT NT 3171 MT 3–436 PUMPS AND (1) "FLYGT BASIC REPAIR KIT " FOR THE FLYGT NT 3315 MT 3–635 PUMPS (PART NO 6571701).

2. CONTRACTOR SHALL PROVIDE (1) COMPLETE SPARE PARTS KIT FOR THE LANDIA AERIGATOR DG–I 105 UNITS. EACH SPARE PARTS KIT SHALL INCLUDE ONE IMPELLER, ONE COMPLETE CHOPPING SYSTEM, INCLUDING ALL ROTATING AND STATIONARY MEMBERS, ONE OUTER MECHANICAL SEAL, ONE SET OF O–RINGS, AND A SET OF SEALING WASHERS.

FILE NAME: PROJECTS\126 – SOUTH SALT LAKE CITY\42.200 – ZELLER AND DOWNTOWN SEWER IMPROVEMENTS\CAD\2 – DOWNTOWN AND PUMP STATION\C–111 PUMPHOUSE PIPE, FITTING_EQUIPMENT SCHEDULE.DWG
FILE DATE: 3.5.2024 14:30:22 (MAJ)

HANSEN ALLEN & LUCE inc ENGINEERS

LICENSED PROFESSIONAL ENGINEER
4/19/24
No. 5052482
GREGORY S. T. CIVIL
STATE OF UTAH

| | | | | | |
|---|---|---|---|---|---|
| DESIGNED | ACS | 3 | | | |
| DRAFTED | BKC, MAJ | 2 | | | |
| CHECKED | GST | 1 | | | |
| DATE | APRIL 2024 | NO. | DATE | REVISIONS | BY APVD. |

SCALE: NONE

SOUTH SALT LAKE

DOWNTOWN SEWER IMPROVEMENTS AND PUMP STATION
CIVIL
PUMPHOUSE PIPE, FITTING & EQUIPMENT SCHEDULE

SHEET C–111

126.42.300

7/04

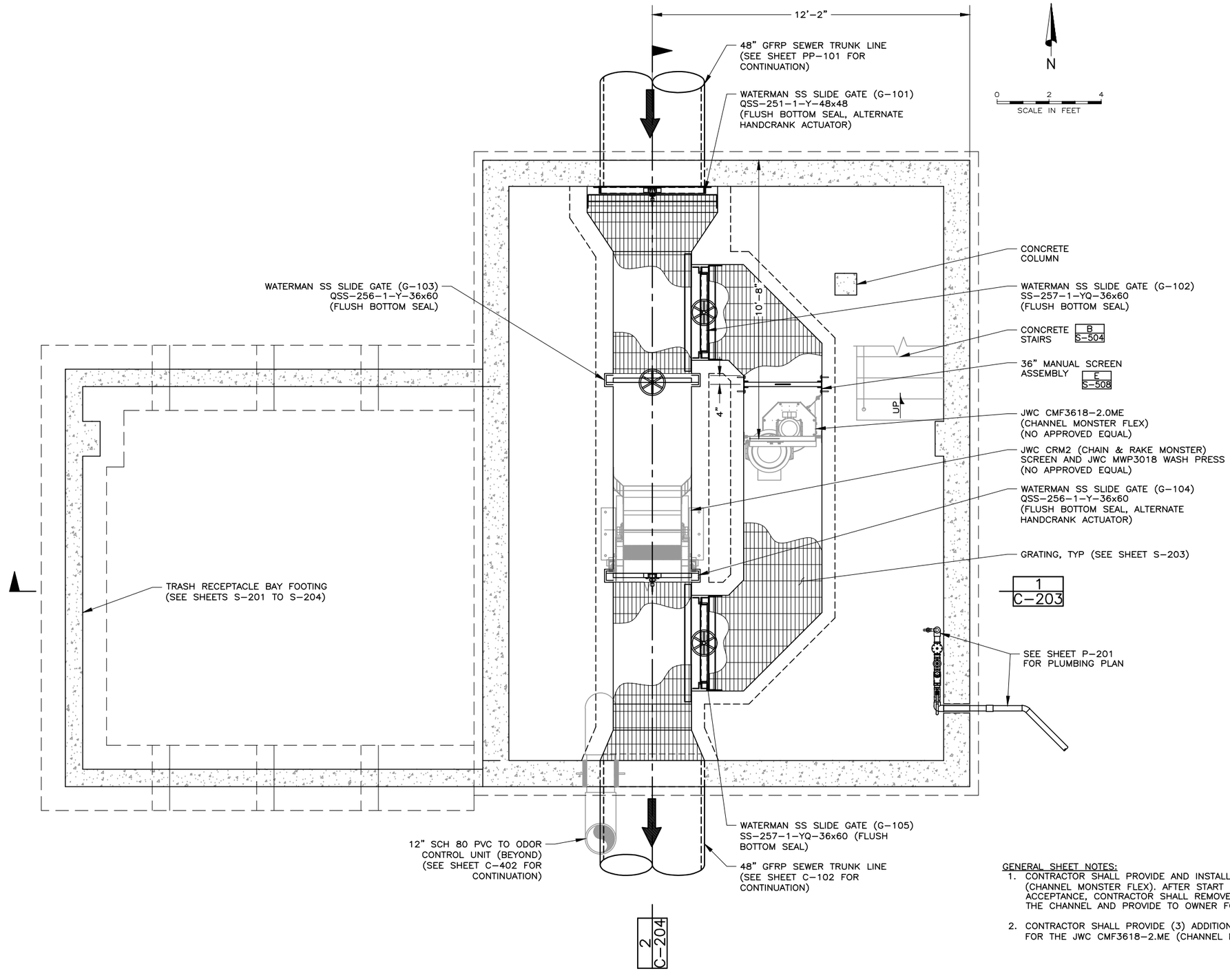


GENERAL SHEET NOTES:

1. CONTRACTOR SHALL PROVIDE AND INSTALL JWC CMF3618-2.ME (CHANNEL MONSTER FLEX). AFTER START UP, TESTING AND ACCEPTANCE, CONTRACTOR SHALL REMOVE THE EQUIPMENT FROM THE CHANNEL AND PROVIDE TO OWNER FOR STORAGE.
2. CONTRACTOR SHALL PROVIDE (3) ADDITIONAL CUTTERS AND SPACERS FOR THE JWC CMF3618-2.ME (CHANNEL MONSTER FLEX).

FILE NAME: PROJECTS\126 - SOUTH SALT LAKE CITY\42.200 - ZELLER AND DOWNTOWN SEWER IMPROVEMENTS\CAD\2 - DOWNTOWN AND PUMP STATION\C-201 SCREEN BUILDING TRENCH PLAN.DWG
FILE DATE: 3.5.2024 14:52:40 (MAJ)

7/04

HANSEN ALLEN & LUCE INC ENGINEERS

LICENSED PROFESSIONAL ENGINEER
4/19/24
No. 5052482
GREGORY S. THOMAS
STATE OF UTAH

| | |
|---|---|
| DESIGNED | ACS |
| DRAFTED | MAJ |
| CHECKED | GST |
| DATE | APRIL 2024 |

| NO. | DATE | REVISIONS | BY | APVD. |
|---|---|---|---|---|
| 3 | | | | |
| 2 | | | | |
| 1 | | | | |

SCALE
AS SHOWN

SOUTH SALT LAKE

DOWNTOWN SEWER IMPROVEMENTS AND PUMP STATION
CIVIL
SCREEN BUILDING TRENCH PLAN

SHEET
C-201
126.42.300

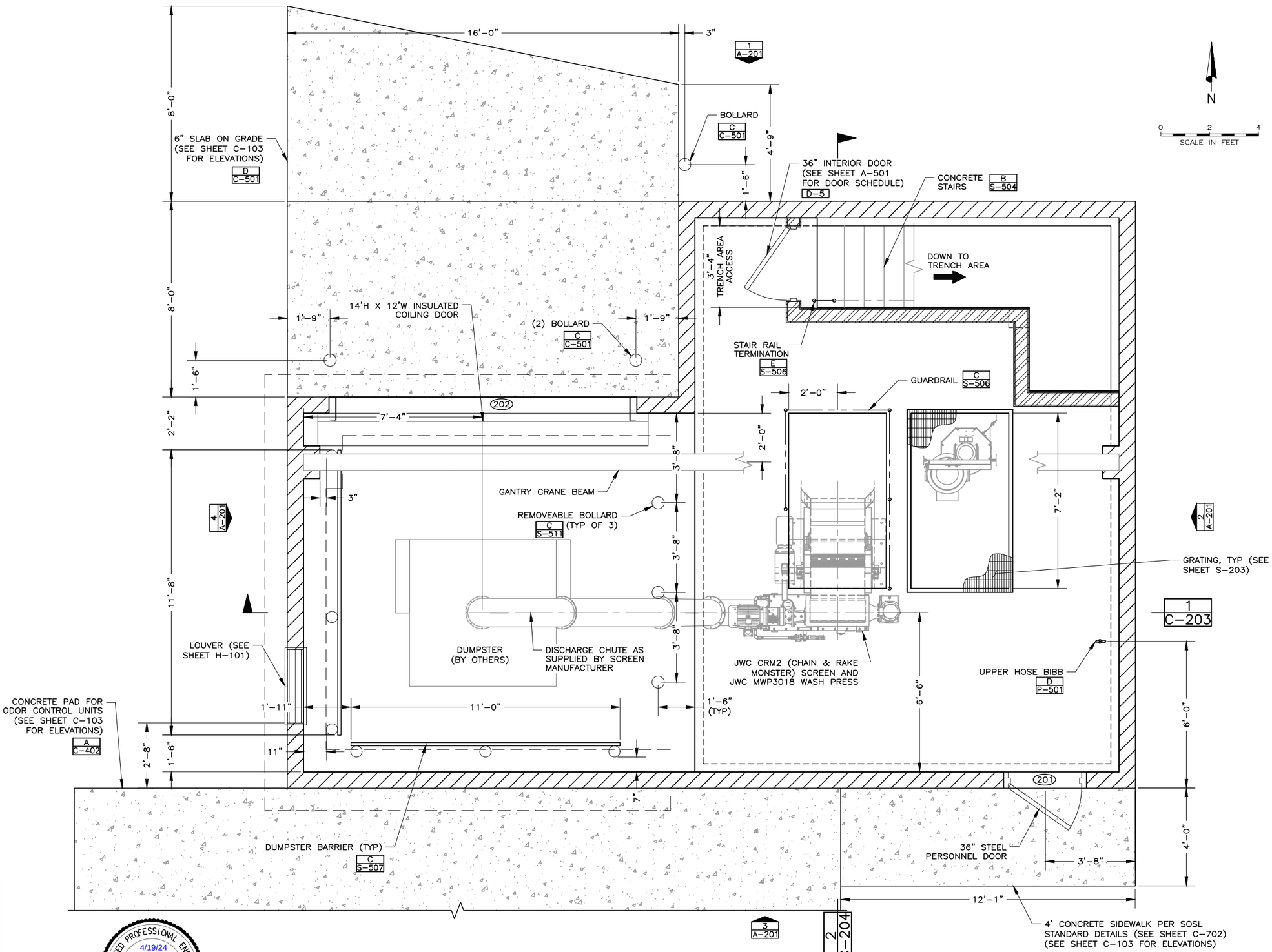


FILE NAME: PROJECTS\126 - SOUTH SALT LAKE CITY\42.200 - ZELLER AND DOWNTOWN SEWER IMPROVEMENTS\CAD\2 - DOWNTOWN AND PUMP STATION\C-202 SCREEN BUILDING FLOOR PLAN.DWG
FILE DATE: 4.17.2024 17:38:14 (MAJ)

HANSEN ALLEN & LUCE INC ENGINEERS

LICENSED PROFESSIONAL ENGINEER 4/19/24 No. 5052482 GREGORY S. THOMAS STATE OF UTAH

| | | | | | | |
|---|---|---|---|---|---|---|
| DESIGNED ACS | 3 | | | | | |
| DRAFTED MAJ | 2 | | | | | |
| CHECKED GST | 1 | | | | | |
| DATE APRIL 2024 | NO. | DATE | REVISIONS | BY | APVD. | |

SCALE AS SHOWN

SOUTH SALT LAKE

DOWNTOWN SEWER IMPROVEMENTS AND PUMP STATION
CIVIL
SCREEN BUILDING FLOOR PLAN

SHEET C-202
126.42.300

7/04

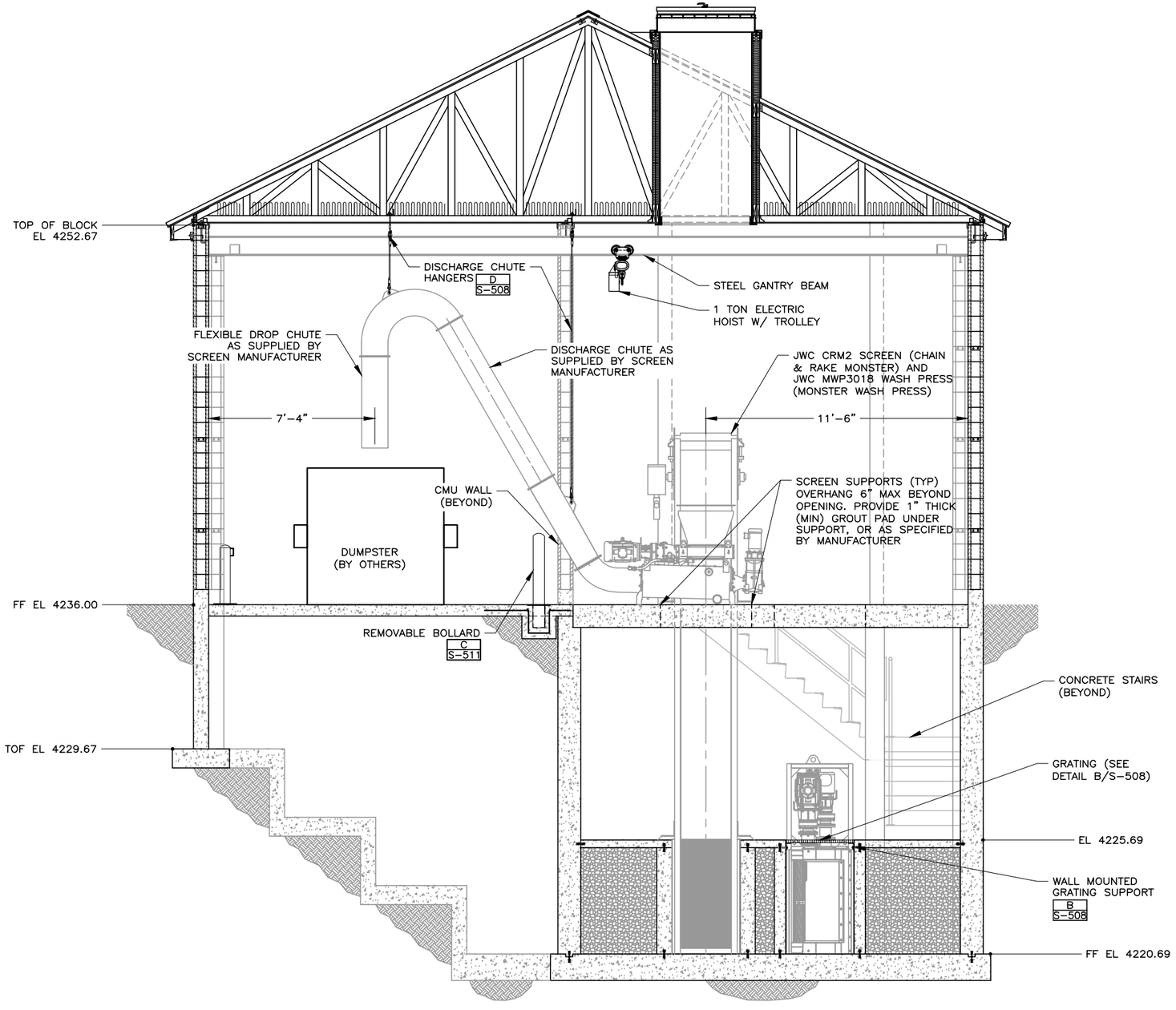


SECTION 1 C-201 / 1 C-202

0 2 4
SCALE IN FEET

FILE NAME: PROJECTS\126 - SOUTH SALT LAKE CITY\42.200 - ZELLER AND DOWNTOWN SEWER IMPROVEMENTS\CAD\2 - DOWNTOWN AND PUMP STATION\C-203 SCREEN BUILDING SECTIONS 1.DWG
FILE DATE: 4.15.2024 16:08:58 (MAJ)

LICENSED PROFESSIONAL ENGINEER
4/19/24
No. 5052482
GREGORY S. TOBIAS
STATE OF UTAH

HANSEN ALLEN & LUCE inc ENGINEERS

| | | | | | | |
|---|---|---|---|---|---|---|
| DESIGNED ACS | 3 | | | | | |
| DRAFTED MAJ | 2 | | | | | |
| CHECKED GST | 1 | | | | | |
| DATE APRIL 2024 | NO. | DATE | REVISIONS | BY | APVD. | |

SCALE: AS SHOWN

SOUTH SALT LAKE

DOWNTOWN SEWER IMPROVEMENTS AND PUMP STATION
CIVIL
SCREEN BUILDING SECTIONS 1

SHEET C-203
126.42.300

7/04

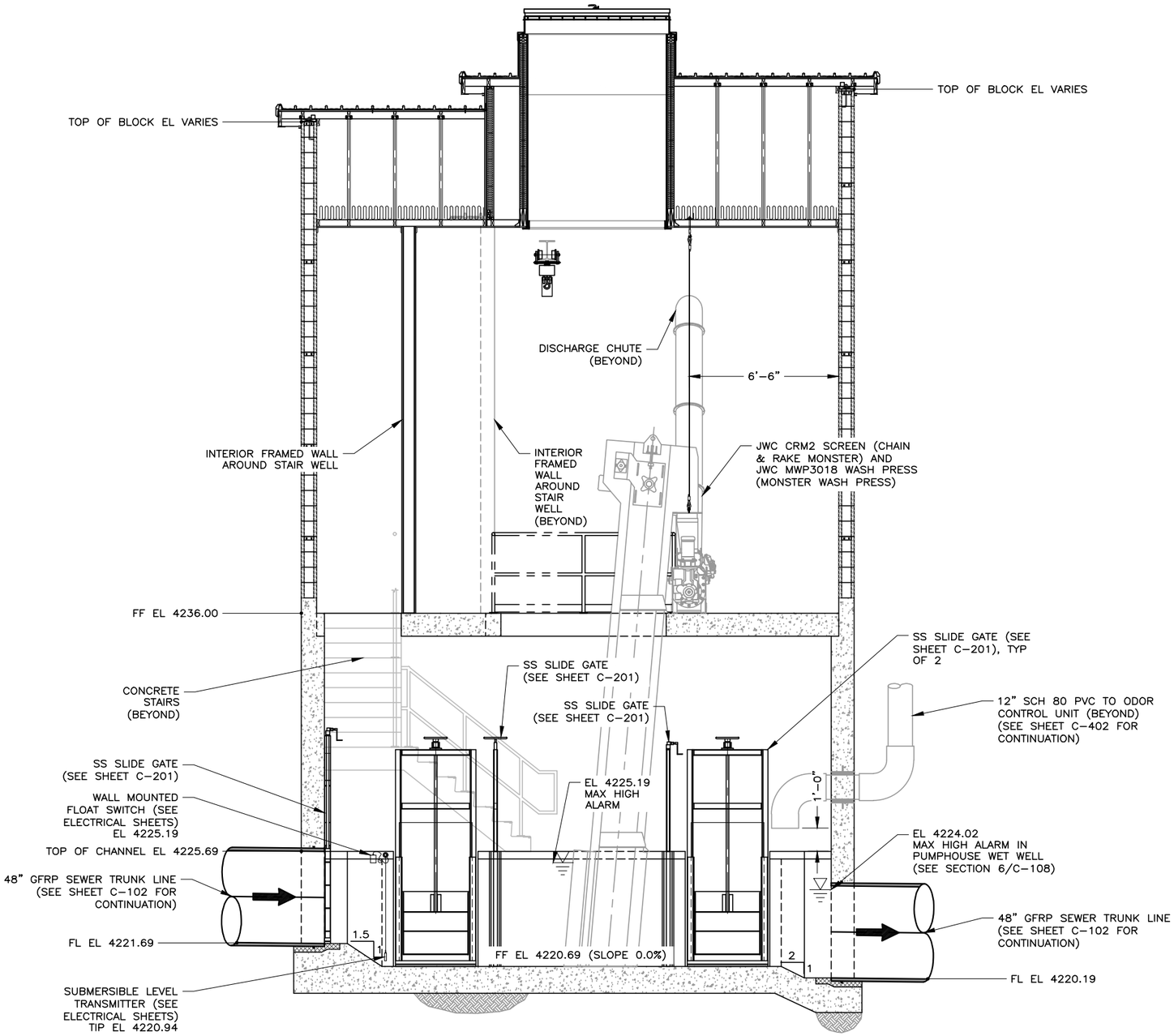


SECTION 2 C-201 | 2 C-202

0 2 4
SCALE IN FEET

FILE NAME: PROJECTS\126 - SOUTH SALT LAKE CITY\42.200 - ZELLER AND DOWNTOWN SEWER IMPROVEMENTS\CAD\2 - DOWNTOWN AND PUMP STATION\C-204 SCREEN BUILDING SECTIONS II.DWG
FILE DATE: 3.5.2024 15:15:22 (MAJ)

LICENSED PROFESSIONAL ENGINEER
4/19/24
No. 5052482
GREGORY S. TUCKETT
STATE OF UTAH

HANSEN ALLEN & LUCE INC ENGINEERS

| | | | | | |
|---|---|---|---|---|---|
| DESIGNED | ACS | 3 | | | |
| DRAFTED | MAJ | 2 | | | |
| CHECKED | GST | 1 | | | |
| DATE | APRIL 2024 | NO. | DATE | REVISIONS | BY / APVD. |

SCALE: AS SHOWN

SOUTH SALT LAKE

DOWNTOWN SEWER IMPROVEMENTS AND PUMP STATION
CIVIL
SCREEN BUILDING SECTIONS II

SHEET C-204
126.42.300

7/04

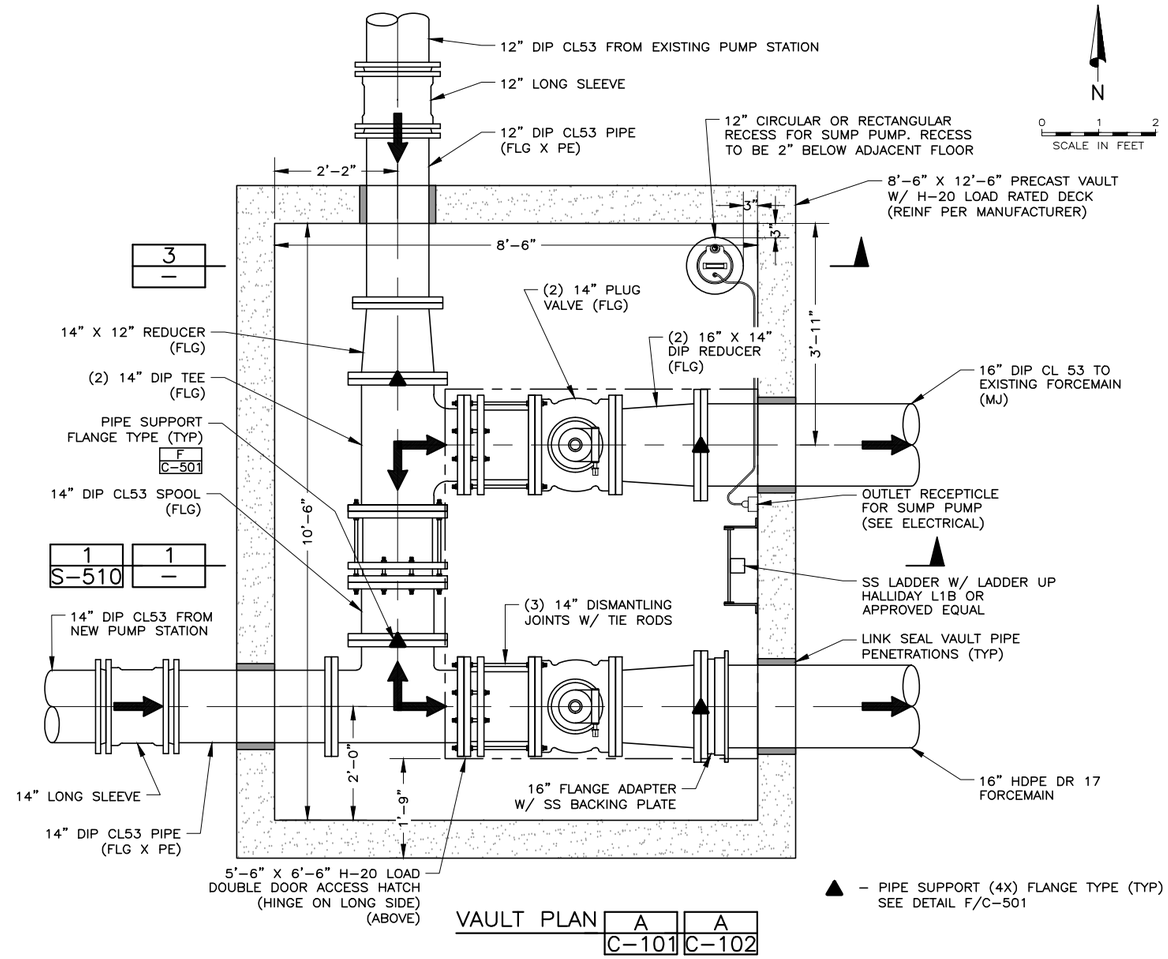


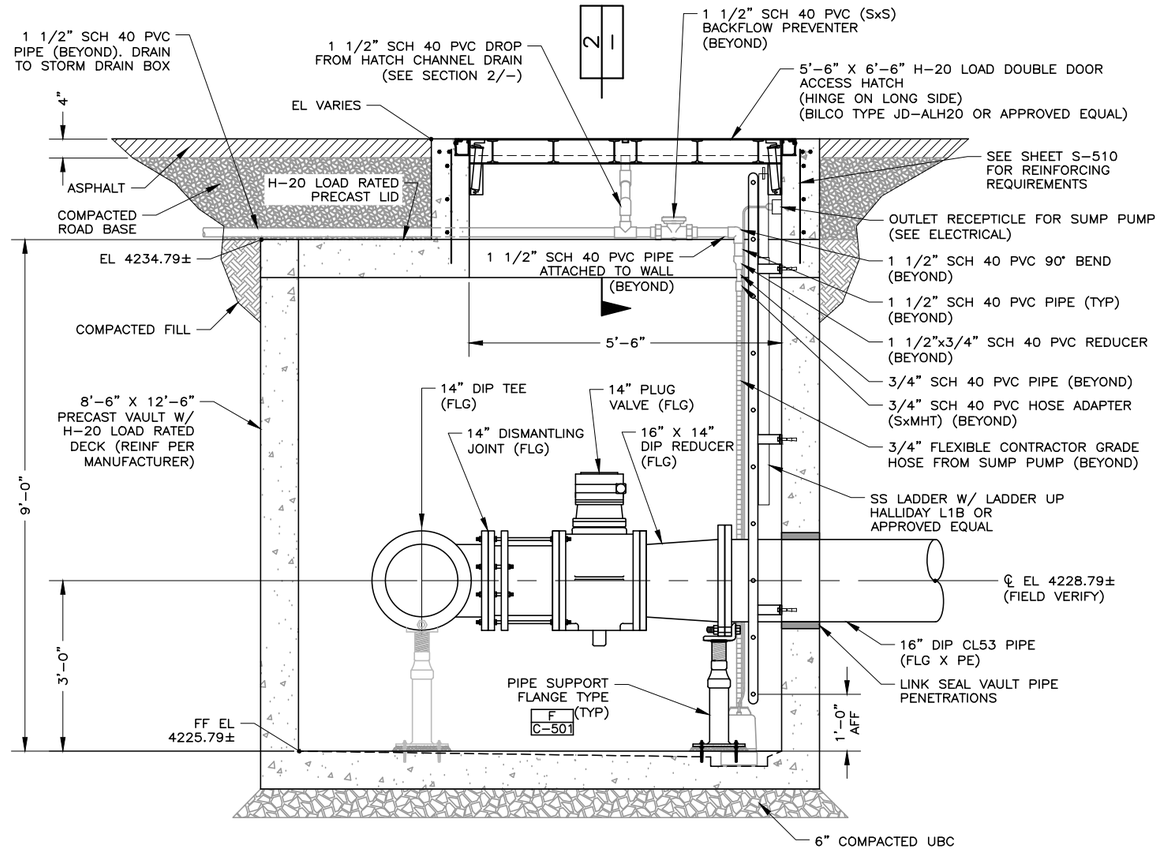


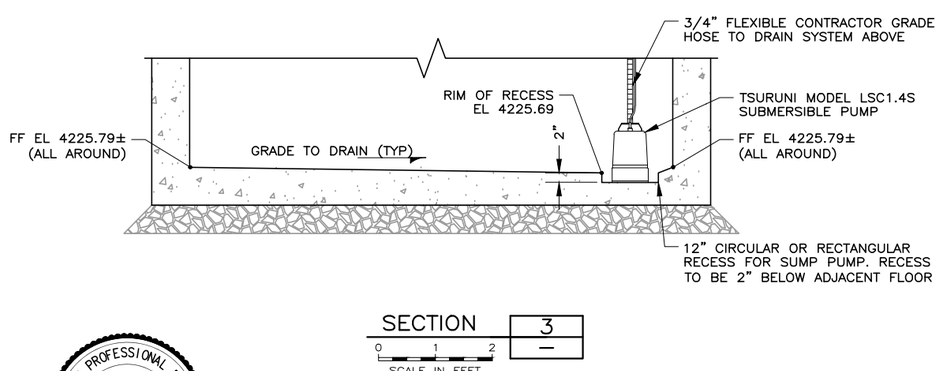


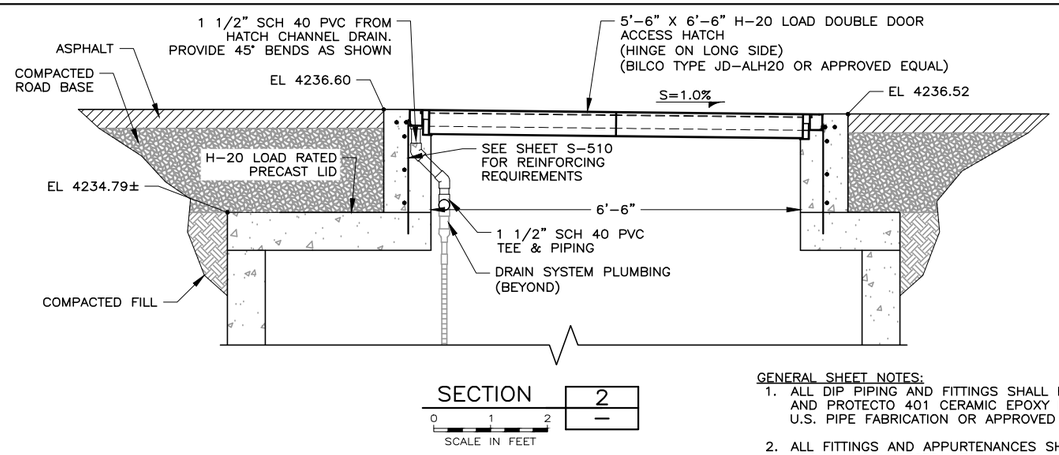


GENERAL SHEET NOTES:

1. ALL DIP PIPING AND FITTINGS SHALL BE CL 53 AND PROTECTO 401 CERAMIC EPOXY LINED BY U.S. PIPE FABRICATION OR APPROVED EQUAL.
2. ALL FITTINGS AND APPURTENANCES SHALL BE MECHANICALLY RESTRAINED.

LICENSED PROFESSIONAL ENGINEER
4/19/24
No. 5052482
GREGORY S. [illegible]
STATE OF UTAH

HANSEN ALLEN & LUCE inc ENGINEERS

| | | | | | |
|---|---|---|---|---|---|
| DESIGNED | ACS | 3 | | | |
| DRAFTED | BKC, MAJ | 2 | | | |
| CHECKED | GST | 1 | | | |
| DATE | APRIL 2024 | NO. | DATE | REVISIONS | BY APVD. |

SCALE: AS SHOWN

SOUTH SALT LAKE

DOWNTOWN SEWER IMPROVEMENTS AND PUMP STATION
CIVIL
INTERCONNECT VAULT PLAN & SECTIONS

SHEET C-401

126.42.300

FILE NAME: PROJECTS\126 - SOUTH SALT LAKE CITY\42.200 - ZELLER AND DOWNTOWN SEWER IMPROVEMENTS\CAD\2 - DOWNTOWN AND PUMP STATION\C-401 INTERCONNECT VAULT PLAN & SECTIONS.DWG
FILE DATE: 3.5.2024 - 15:46:56 (MAJ)

7/04

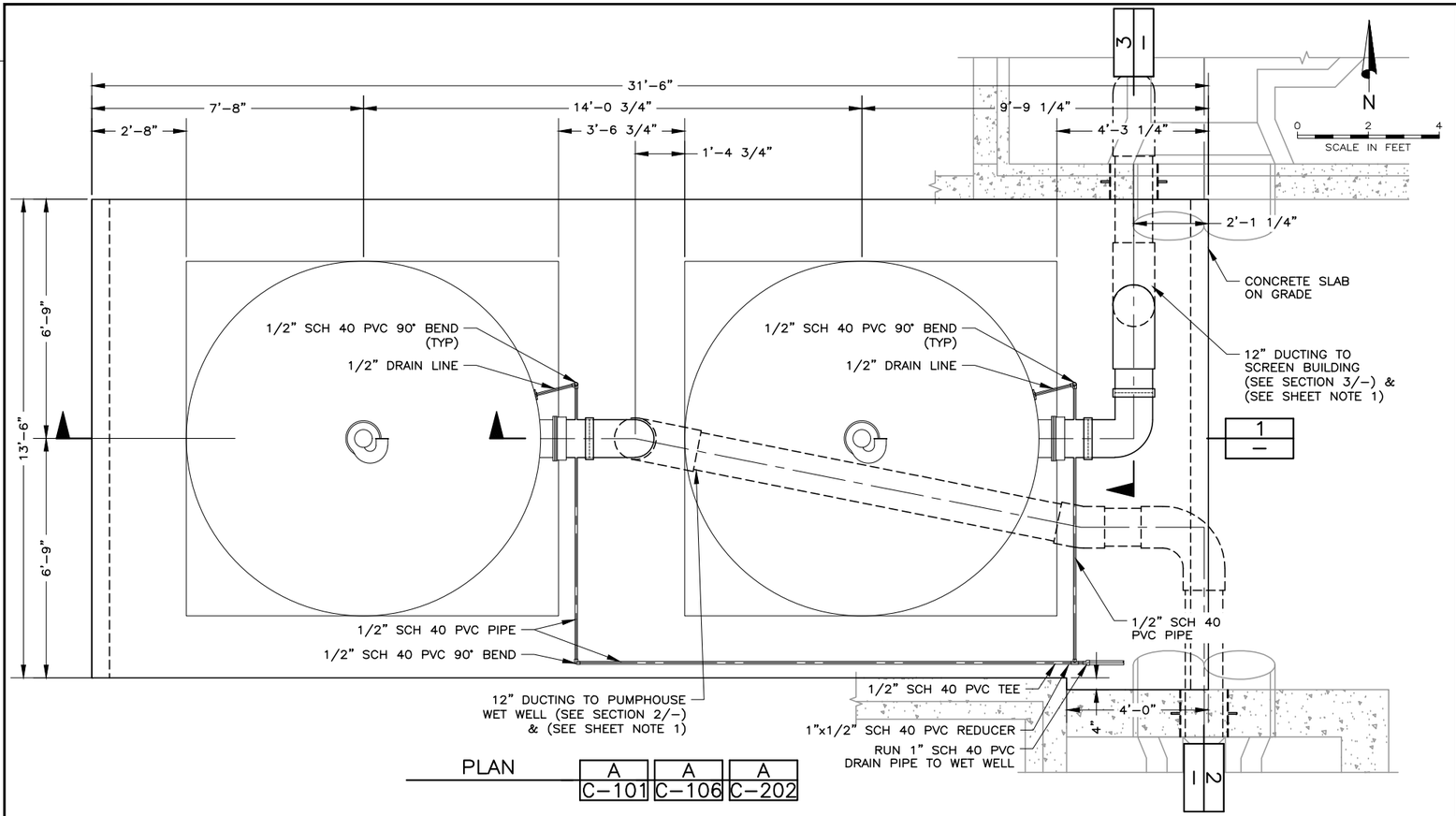


PLAN | A C-101 | A C-106 | A C-202

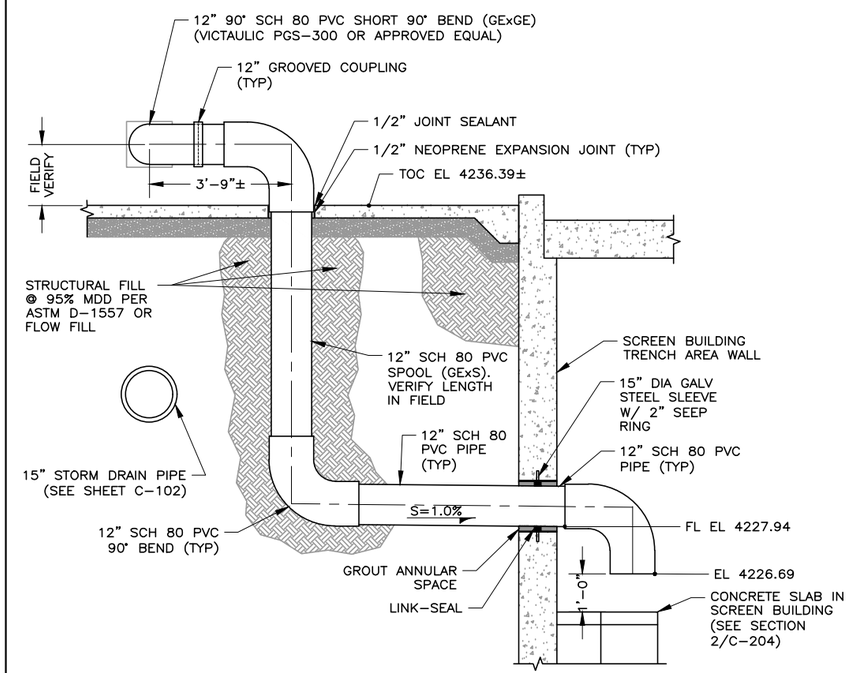


SECTION 3 — SCALE IN FEET

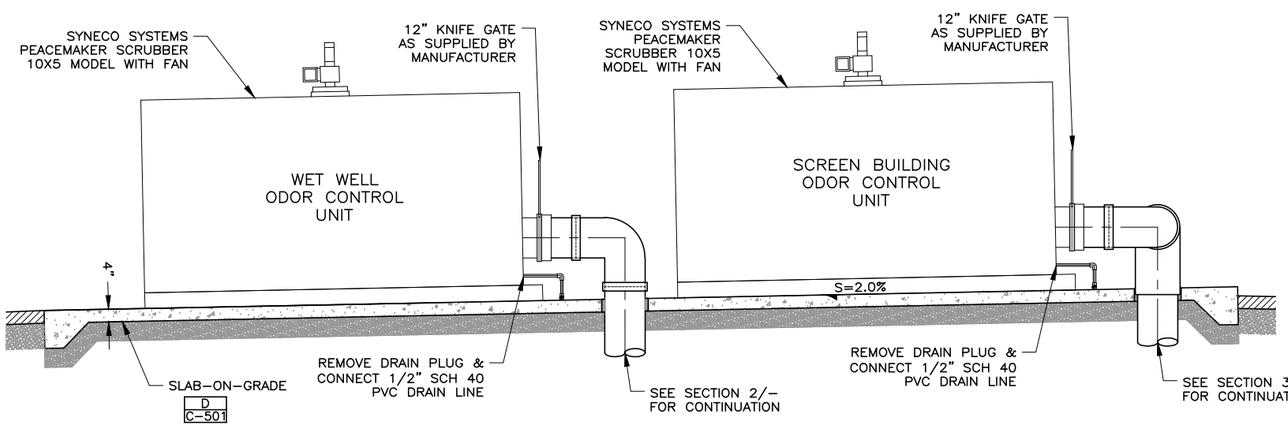


SECTION 1 — SCALE IN FEET

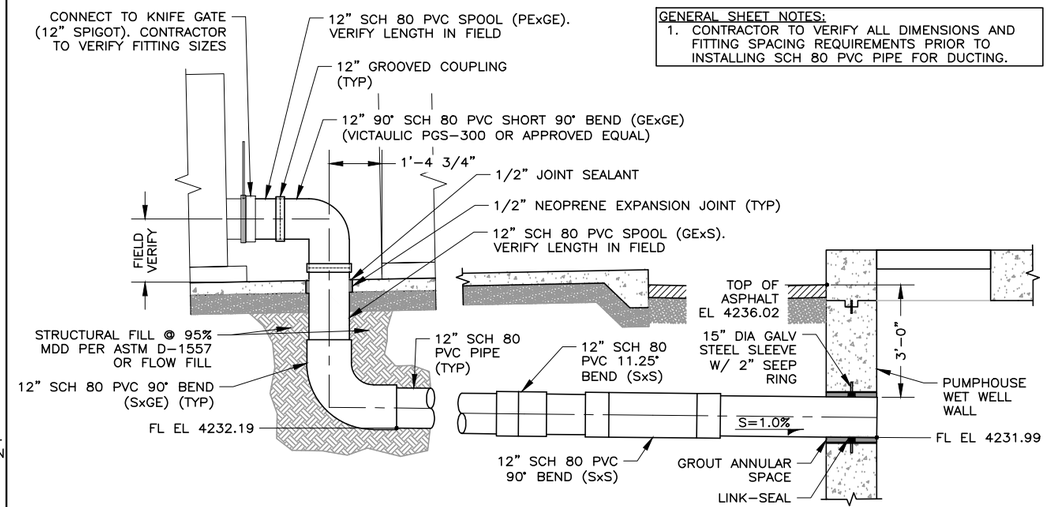


GENERAL SHEET NOTES:
1. CONTRACTOR TO VERIFY ALL DIMENSIONS AND FITTING SPACING REQUIREMENTS PRIOR TO INSTALLING SCH 80 PVC PIPE FOR DUCTING.

SECTION 2 — SCALE IN FEET

LICENSED PROFESSIONAL ENGINEER 4/19/24 No. 5052482 GREGORY S. THOMAS STATE OF UTAH

| | | | | | | | |
|---|---|---|---|---|---|---|---|
| DESIGNED | ACS | 3 | | | | | |
| DRAFTED | MAJ | 2 | | | | | |
| CHECKED | GST | 1 | | | | | |
| DATE | APRIL 2024 | NO. | DATE | REVISIONS | | BY | APVD. |

SCALE: AS SHOWN

SOUTH SALT LAKE

DOWNTOWN SEWER IMPROVEMENTS AND PUMP STATION
CIVIL
ODOR CONTROL UNITS PLAN & SECTIONS

SHEET C-402

126.42.300

FILE NAME: PROJECTS\126 - SOUTH SALT LAKE CITY\42.200 - ZELLER AND DOWNTOWN SEWER IMPROVEMENTS\CAD\2 - DOWNTOWN AND PUMP STATION\C-402 ODOR CONTROL UNITS PLAN & SECTIONS.DWG
FILE DATE: 3.20.2024 08:58:36 (MAJ)

7/04

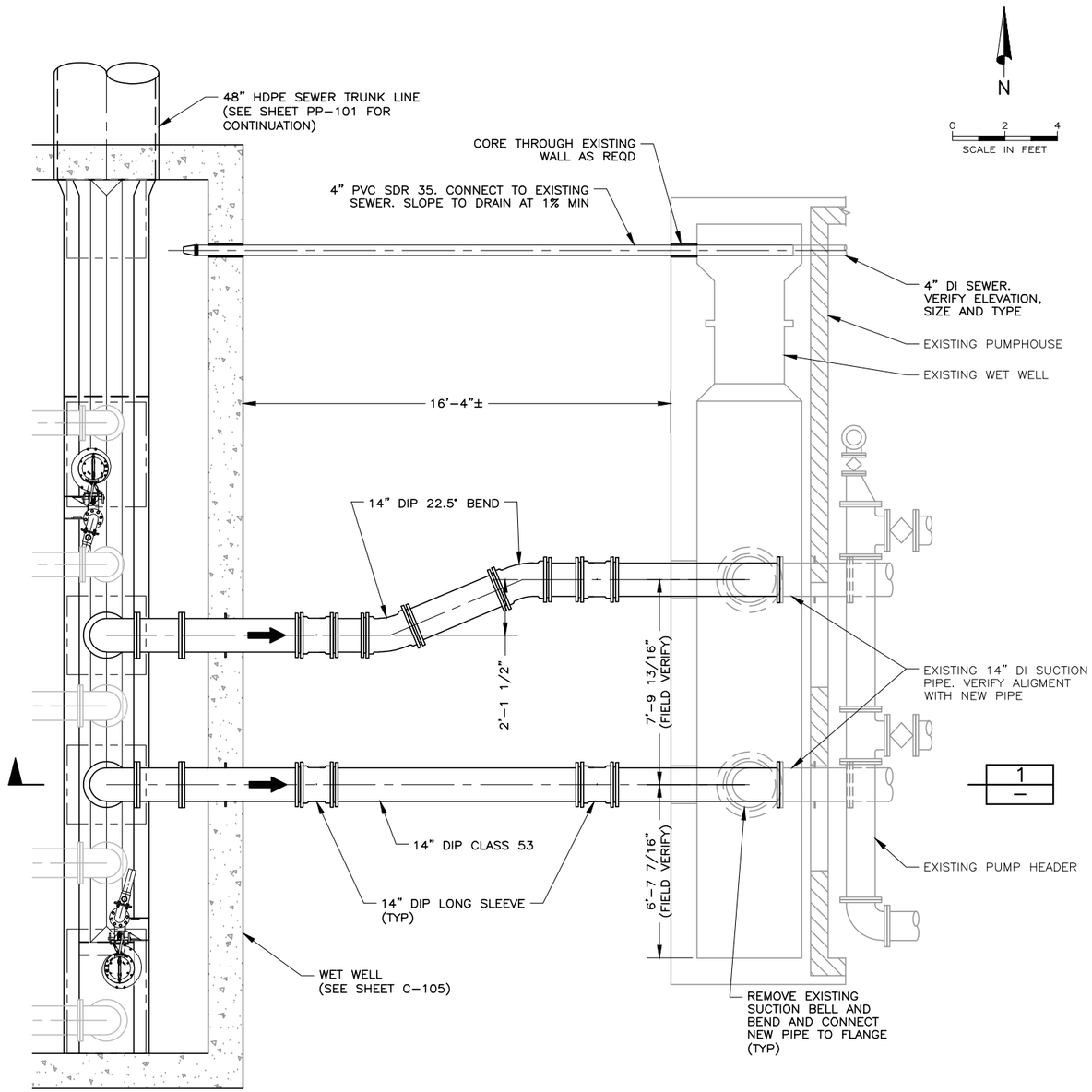


DETAIL NOTES:
1. ALL DIP PIPING AND FITTINGS SHALL BE CL 53 AND PROTECTO 401 CERAMIC EPOXY LINED BY U.S. PIPE FABRICATION OR APPROVED EQUAL.
2. ALL FITTINGS AND APPURTENANCES SHALL BE MECHANICALLY RESTRAINED.

EXISTING WET WELL CONNECTION — A / C-102

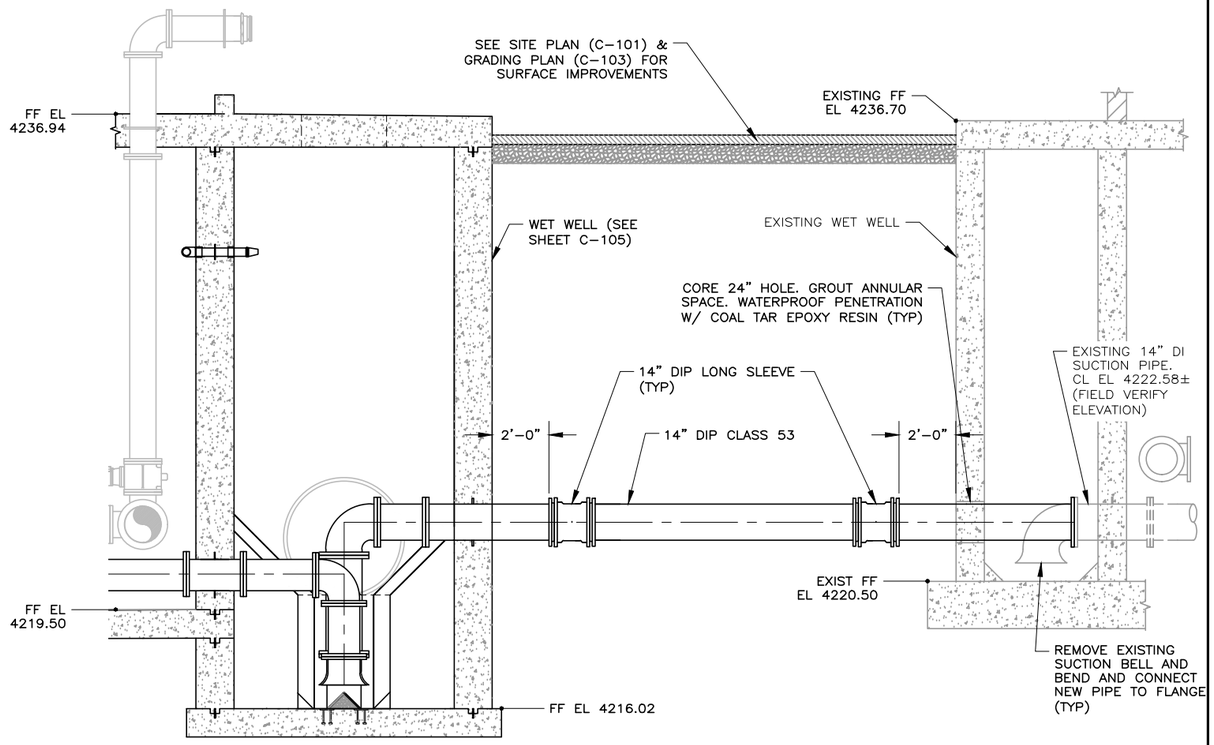


DETAIL NOTES:
1. ALL DIP PIPING AND FITTINGS SHALL BE CL 53 AND PROTECTO 401 CERAMIC EPOXY LINED BY U.S. PIPE FABRICATION OR APPROVED EQUAL.
2. ALL FITTINGS AND APPURTENANCES SHALL BE MECHANICALLY RESTRAINED.

SECTION — 1 / —

0 2 4
SCALE IN FEET

FILE NAME: PROJECTS\126 - SOUTH SALT LAKE CITY\42.200 - ZELLER AND DOWNTOWN SEWER IMPROVEMENTS\CAD\2 - DOWNTOWN AND PUMP STATION\C-403 EXIST WET WELL PLAN & SECTION.DWG
FILE DATE: 3.5.2024 17:54:23 (MAJ)

LICENSED PROFESSIONAL ENGINEER
4/19/24
No. 5052482
GREGORY S. THOMAS
STATE OF UTAH

HANSEN ALLEN & LUCE, INC. ENGINEERS

| | | | | | | |
|---|---|---|---|---|---|---|
| DESIGNED | ACS | 3 | | | | |
| DRAFTED | BKC, MAJ | 2 | | | | |
| CHECKED | GST | 1 | | | | |
| DATE | APRIL 2024 | NO. | DATE | REVISIONS | BY | APVD. |

SCALE: AS SHOWN

SOUTH SALT LAKE

DOWNTOWN SEWER IMPROVEMENTS AND PUMP STATION
CIVIL
EXISTING WET WELL PLAN & SECTION

SHEET C-403
126.42.300

7/04

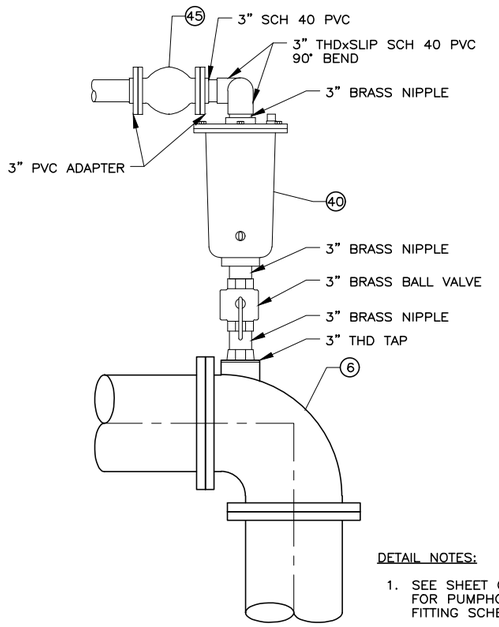


DETAIL NOTES:

1. SEE SHEET C-111 FOR PUMPHOUSE FITTING SCHEDULE.

AIR VAC VALVE — NTS

| A | A |
|---|---|
| C-105 | C-107 |

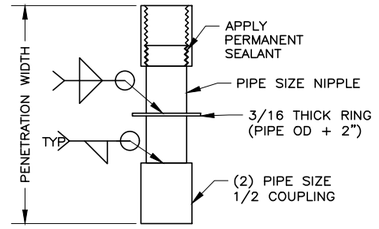


DETAIL NOTES:

1. ALL COMPONENTS TO BE TYPE 304 STAINLESS STEEL.
2. WALL PIECE TO BE PLACED PRIOR TO CONCRETE PLACEMENT.

WALL PIECE — NTS

| B |
|---|
| C-107 |

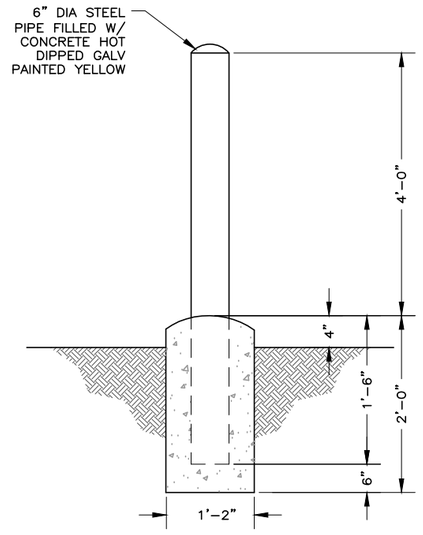


BOLLARD — NTS

| C | C | C | C | C |
|---|---|---|---|---|
| A-101 | A-102 | C-101 | C-106 | C-202 |

| C | C |
|---|---|
| PP-104 | PP-105 |

| REBAR SCHEDULE (UNO) | |
|---|---|
| SLAB THICKNESS | SPACING |
| 6" & LESS | #4 @ 18" OC |
| 8" | #4 @ 12" OC |
| 10" | #4 @ 10" OC |

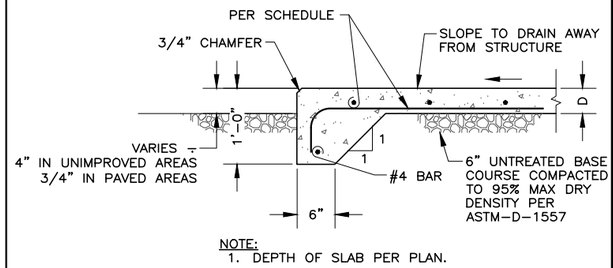


NOTE:
1. DEPTH OF SLAB PER PLAN.

SLAB ON GRADE — NTS

| D | D | D | D |
|---|---|---|---|
| – | C-101 | C-202 | C-402 |

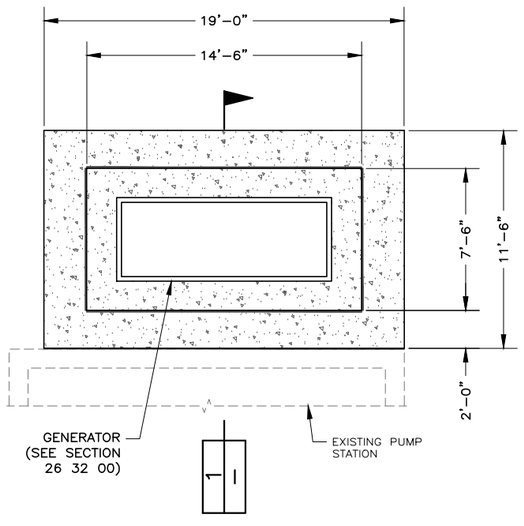


GENERATOR CONCRETE FOUNDATION PLAN — NTS

| E |
|---|
| C-101 |

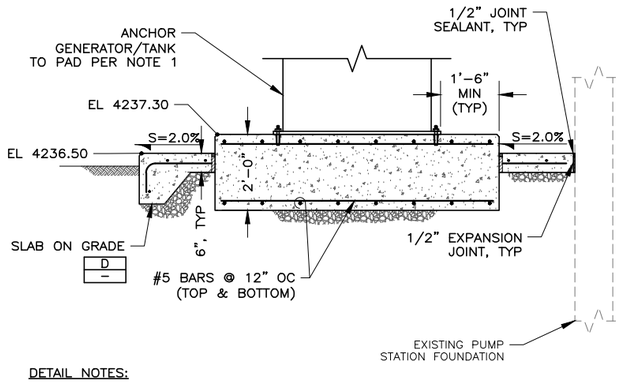


DETAIL NOTES:

1. DETAIL IS PROVIDED FOR GENERAC SD400 12.5 L 400KW 480 V (136.02"x53.00"). ANCHOR GENERATOR TO PAD WITH (10) 3/4"x6" SIMPSON TITEN HD BOLTS (STAINLESS STEEL).
2. IF DIFFERENT GENERATOR IS USED, THEN CONTRACTOR IS TO PROVIDE AND VERIFY PAD DIMENSIONS AND THICKNESS WITH GENERATOR MANUFACTURER. ANCHOR BOLTS DIMENSIONS, COVER AND EDGE DISTANCES TO BE DESIGNED PER THE CRACKED-CONCRETE (SEISMIC) REQUIREMENTS OF THE CURRENT ACI 318 AND ACI 351.3R-18 CODE.
3. PROVIDE SEISMIC ISOLATORS AT THE BASE OF THE GENERATOR SLED IF RECOMMENDED BY MANUFACTURER.

SECTION — NTS

| 1 |
|---|
| – |

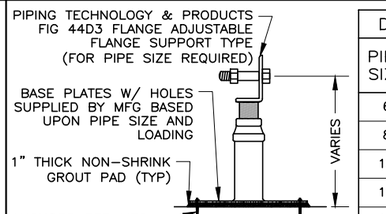


| DIMENSIONS IN INCHES | | | | | |
|---|---|---|---|---|---|
| PIPE SIZE | A | B | C (SQ) | D | E |
| 6 | 3 | 5.50 | 9 | 2.50 | 4.75 |
| 8 | 3 | 6.87 | 9 | 2.50 | 4.75 |
| 10 | 3 | 8.50 | 9 | 2.50 | 4.75 |
| 12 | 3 | 9.93 | 9 | 2.50 | 4.75 |
| 14 | 4 | 10.93 | 11 | 3 | 4.50 |
| 16 | 4 | 12.37 | 11 | 3 | 4.50 |

"A" = SCHEDULE 40 PIPE DIAMETER. LENGTH CUT ON SITE
"B" = BASE OF SADDLE TO CENTER OF PIPE
"C" = BASE PLATE (SQUARE) (DRILLED AND SLOTTED FROM PT&P)
"D" = THREADED PIPE ADJUSTER DIAMETER
"E" = TOTAL ALLOWABLE ADJUSTMENT

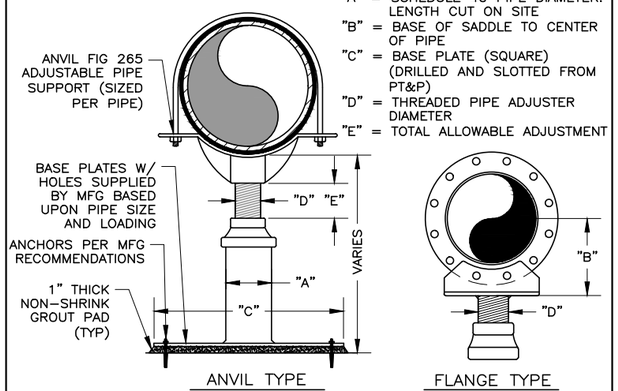


PIPE SUPPORTS — NTS

| F | F | F |
|---|---|---|
| C-105 | C-107 | C-401 |

LICENSED PROFESSIONAL ENGINEER
4/19/24
No. 5052482
GREGORY S. THOMAS
STATE OF UTAH

| | | | | | | | |
|---|---|---|---|---|---|---|---|
| DESIGNED | ACS | 3 | | | | | |
| DRAFTED | TPB, MAJ | 2 | | | | | |
| CHECKED | GST | 1 | | | | | |
| DATE | APRIL 2024 | NO. | DATE | REVISIONS | | BY | APVD. |

SCALE: AS SHOWN

DOWNTOWN SEWER IMPROVEMENTS AND PUMP STATION
CIVIL
MISCELLANEOUS DETAILS I

SHEET C-501

126.42.300

FILE NAME:PROJECTS\126 - SOUTH SALT LAKE CITY\42.200 - ZELLER AND DOWNTOWN SEWER IMPROVEMENTS\CAD\2 - DOWNTOWN AND PUMP STATION\C-501 MISC DETAILS I.DWG
FILE DATE: 3.5.2024 17:55:34 (MAJ)
7/04

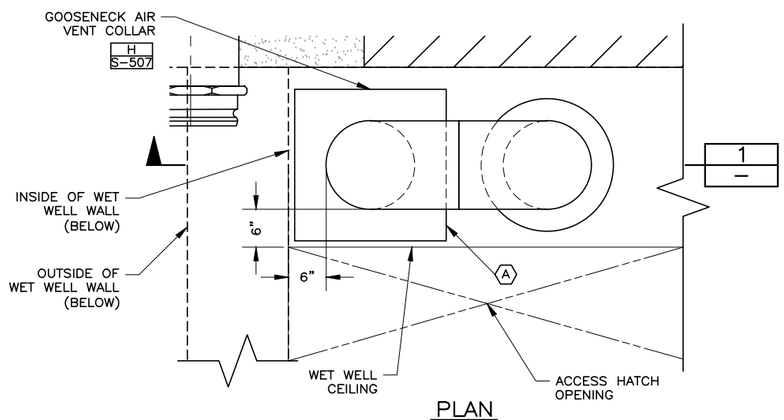


PLAN

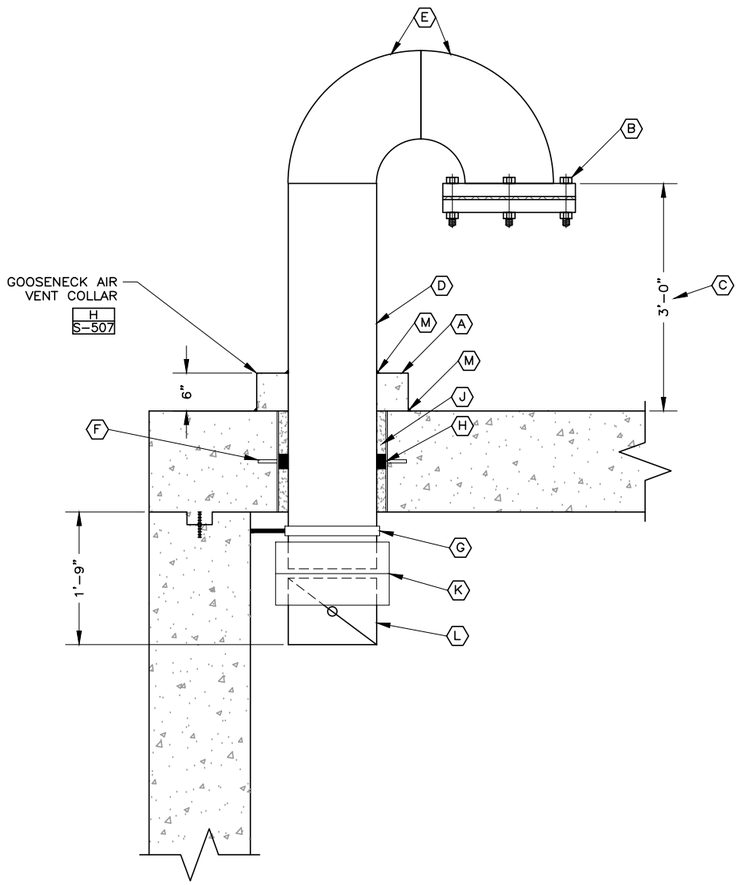


SECTION 1 / —
NTS

GOOSENECK AIR VENT A / C-106 A / C-108 A / S-507
NTS

KEY NOTES:

- (A) PROVIDE 2'-0" SQ X 6" HIGH CONCRETE CURB AT ROOF SLAB PENETRATION (SEE DETAIL H/S-507 FOR STRUCTURAL REQUIREMENTS)
- (B) 1/2" STAINLESS STEEL, 18 GAUGE MESH BIRD SCREEN SECURED BY FLANGE FITTING
- (C) TERMINATE MINIMUM 36" ABOVE TOP OF CONCRETE
- (D) 14" DIA SCH 40 GALVANIZED PIPE
- (E) (2) GALVANIZED STEEL PIPE ELBOWS TO FORM A GOOSENECK
- (F) 16" DIA GALV STEEL SLEEVE W/ 2" SEEP RING
- (G) PIPE CLAMP
- (H) LINK SEAL (MODEL S-316)
- (J) GROUT ANNULAR SPACE
- (K) FLEXIBLE COUPLING EQUAL TO FERNCO SERIES 1056 COUPLING
- (L) 14" DIA SCH 40 PVC BALANCING HAND DAMPER WITH LOCKING QUADRANT EQUAL TO RUSKIN MODEL PVC12
- (M) JOINT SEALANT PER SECTION 03 25 00

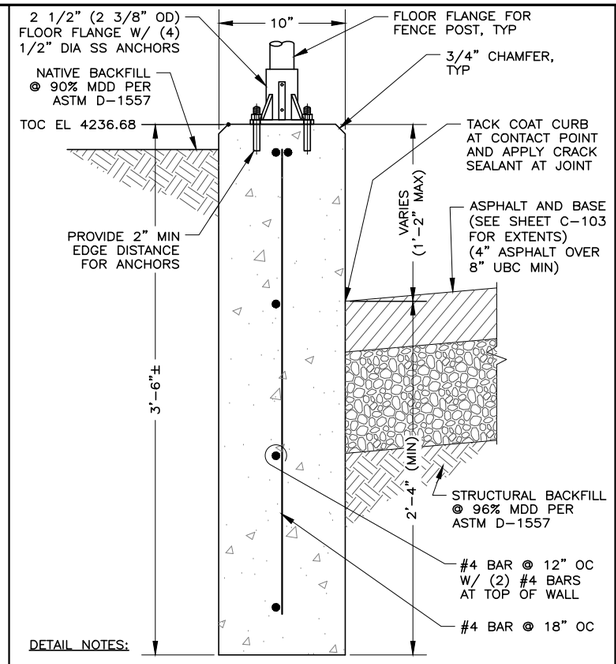


DETAIL NOTES:

1. PROVIDE CONTROL JOINTS AT 15' OC MAX ALONG LENGTH OF CURB.

10" CURB B / C-101
NTS

FILE NAME: PROJECTS\126 - SOUTH SALT LAKE CITY\42.200 - ZELLER AND DOWNTOWN SEWER IMPROVEMENTS\CAD\2 - DOWNTOWN AND PUMP STATION\C-502 MISC DETAILS II.DWG
FILE DATE: 4.17.2024 08:51:46 (MAJ)

7/04

HANSEN ALLEN & LUCE inc ENGINEERS

LICENSED PROFESSIONAL ENGINEER 4/19/24 No. 5052482 GREGORY S. THOMAS STATE OF UTAH

| | | | | | | |
|---|---|---|---|---|---|---|
| DESIGNED ACS | 3 | | | | | |
| DRAFTED TPB, MAJ | 2 | | | | | |
| CHECKED GST | 1 | | | | | |
| DATE APRIL 2024 | NO. | DATE | REVISIONS | BY | APVD. | |

SCALE AS SHOWN

SOUTH SALT LAKE

DOWNTOWN SEWER IMPROVEMENTS AND PUMP STATION
CIVIL
MISCELLANEOUS DETAILS II

SHEET C-502
126.42.300

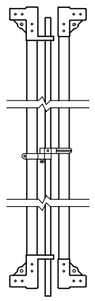

DROP ROD ASSEMBLY

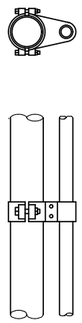

TOP GATE HINGE

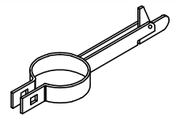

GATE KEEPER

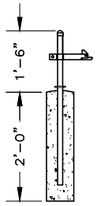


GATE KEEPER POST

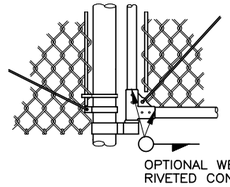


BOTTOM GATE HINGE AND GATE DETAIL

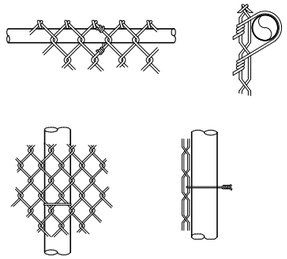

PIPE POST TIE

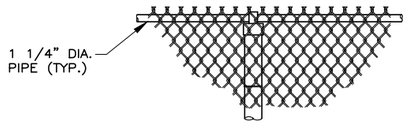


TWISTED & BARBED SELVAGE
TYPE II

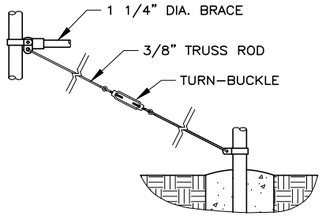


BRACE AND TRUSS CONNECTIONS

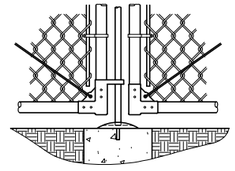

CENTER GATE STOP AND GATE DETAIL

GENERAL SHEET NOTES:

1. MATERIALS, CONSTRUCTION, AND WORKMANSHIP SHALL BE IN ACCORDANCE WITH PROJECT STANDARD SPECIFICATIONS.
2. USE TYPE II TOP SUPPORT (TWISTED & BARBED SELVAGE).
3. BARB WIRE SHALL BE USED ONLY WHEN DESIGNATED ON THE PLANS OR IN THE SPECIFICATIONS.
4. TWISTED AND BARBED SELVAGE TOP AND BOTTOM SHALL BE USED ON FENCES 5-FEET HIGH OR GREATER.
5. KNUCKLED SELVAGE ON TOP AND TWISTED AND BARBED ON BOTTOM SHALL BE USED ON FENCES LESS THAN 5-FEET.
6. ALL STEEL PIPE MEMBERS SHALL CONFORM TO THE REQUIREMENTS OF ASTM DESIGNATION F1083 SCHEDULE 40 HOT DIPPED ZINC COATED HIGH TENSILE STEEL PIPE OR TRIPLE COATED PIPE MADE FROM STEEL CONFORMING TO ASTM F1043.
7. POSTS SHALL BE STEEL SCHEDULE 40 PIPE OR TRIPLE COATED HIGH TENSILE STEEL PIPE OF THE SIZE SHOWN IN THE CHART. WEIGHT IN POUNDS PER FOOT WITH A TOLERANCE OF 5%.
8. LINE POSTS SHALL BE LOCATED AT EQUAL SPACING FOR EACH SEGMENT WITH A MAXIMUM SPACING AS FOLLOWS:
   A. TANGENT SECTIONS TO 500-FOOT RADIUS NOT MORE THAN 10-FEET.
   B. UNDER 500-FOOT RADIUS TO 200-FOOT RADIUS NOT MORE THAN 8-FEET.
   C. UNDER 200-FOOT RADIUS TO 100-FOOT RADIUS NOT MORE THAN 6-FEET.
   D. UNDER 100-FOOT RADIUS NOT MORE THAN 5-FEET.
9. TRUSS RODS AND BRACES SHALL NOT BE REQUIRED FOR FABRIC HEIGHT LESS THAN 5-FEET.
10. TENSION WIRE SHALL BE 7 GAUGE ZINC COIL SPRING STEEL TENSION WIRE.
11. PROVIDE PRIVACY SLATS IN ALL FENCES. PRIVACY SLATS SHALL NOT BE INSTALLED IN GATES. COORDINATE COLOR WITH OWNER. SLATS SHALL MEET REQUIREMENTS OF SECTION 32 31 13.




| HEIGHT | GATE OPENING | GATE POST | GATE FRAME |
|---|---|---|---|
| UNDER 6 FEET | SINGLE TO 6' OR DOUBLE TO 12' | 2" | 1" |
| | SINGLE OVER 6' TO 8' OR DOUBLE OVER 12' TO 16' | 2 1/2" | 1 1/2" |
| | SINGLE OVER 8' TO 12' OR DOUBLE 16' TO 24' | 3 1/2" | |
| 6 FEET AND OVER | SINGLE OVER 6' OR DOUBLE TO 12' | 2 1/2" | 1 1/2" |
| | SINGLE OVER 6' TO 12' OR DOUBLE OVER 12' TO 24' | 3 1/2" | |
| | SINGLE OVER 12' TO 18' OR DOUBLE OVER 24' TO 36' | 6" | |
| | SINGLE OVER 18' OR DOUBLE OVER 36' | 8" | |

| HEIGHT OF FABRIC | DEPTH OF POSTS | LENGTH OF END, CORNER OR PULL POST | LENGTH OF LINE POST HOLES | SIZE OF POSTS | | | | | | |
|---|---|---|---|---|---|---|---|---|---|---|
| | | | | END, CORNER, & PULL POSTS | | | | LINE POST MIN. SIZE | | | |
| | | | | NOM. SIZE | OUTSIDE DIA. | PIPE WEIGHT ASTM F1083 | PIPE WEIGHT TRIPLE COATED | NOM. SIZE | OUTSIDE DIA. | PIPE WEIGHT ASTM F1083 | PIPE WEIGHT TRIPLE COATED |
| 8' | 3' | 11' | 10'-8" | 2 1/2" | 2.875" | 5.79 | 4.64 | 2" | 2.375" | 3.65 | 3.11 |
| 7' | 3' | 10' | 9'-8" | 2 1/2" | 2.875" | 5.79 | 4.64 | 2" | 2.375" | 3.65 | 3.11 |
| 6' | 3' | 9' | 8'-8" | 2 1/2" | 2.875" | 5.79 | 4.64 | 2" | 2.375" | 3.65 | 3.11 |
| 5' | 3' | 8' | 7'-8" | 2" | 2.375" | 3.65 | 3.11 | 1 1/2" | 1.900" | 2.72 | 2.23 |
| 4' | 3' | 6' | 5'-8" | 2" | 2.375" | 3.65 | 3.11 | 1 1/2" | 1.900" | 2.72 | 2.23 |
| 3' | 3' | 5' | 4'-8" | 2" | 2.375" | 3.65 | 3.11 | 1 1/2" | 1.900" | 2.72 | 2.23 |

TYPICAL CHAIN LINK FENCE DETAILS
NTS

| A | A |
|---|---|
| C-101 | PP-103 |

LICENSED PROFESSIONAL ENGINEER
GREGORY S. TWEEDIE
No. 5052482
4/18/24
STATE OF UTAH

HANSEN ALLEN & LUCE inc ENGINEERS

| | | | | | |
|---|---|---|---|---|---|
| DESIGNED | ACS | 3 | | | |
| DRAFTED | TPB | 2 | | | |
| CHECKED | GST | 1 | | | |
| DATE | APRIL 2024 | NO. | DATE | REVISIONS | BY APVD. |

SCALE AS SHOWN

SOUTH SALT LAKE

DOWNTOWN SEWER IMPROVEMENTS AND PUMP STATION
CIVIL
CHAIN LINK FENCE DETAILS

SHEET C-503
126.42.300

FILE NAME: PROJECTS\126 - SOUTH SALT LAKE CITY\42.200 - ZELLER AND DOWNTOWN SEWER IMPROVEMENTS\CAD\2 - DOWNTOWN AND PUMP STATION\C-503 CHAIN LINK FENCE DETAILS.DWG
FILE DATE: 3.5.2024 17:57:33 (MAJ)

7/04

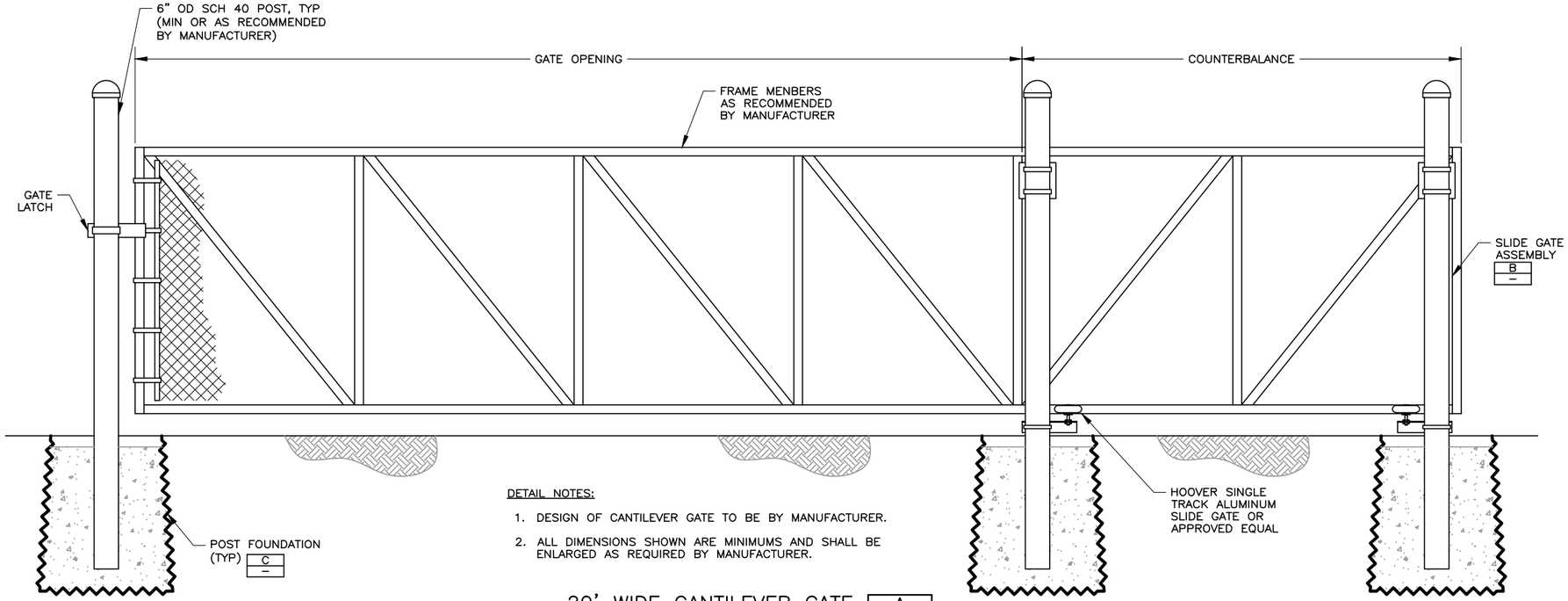


DETAIL NOTES:

1. DESIGN OF CANTILEVER GATE TO BE BY MANUFACTURER.
2. ALL DIMENSIONS SHOWN ARE MINIMUMS AND SHALL BE ENLARGED AS REQUIRED BY MANUFACTURER.

20' WIDE CANTILEVER GATE — A / C–101
NTS

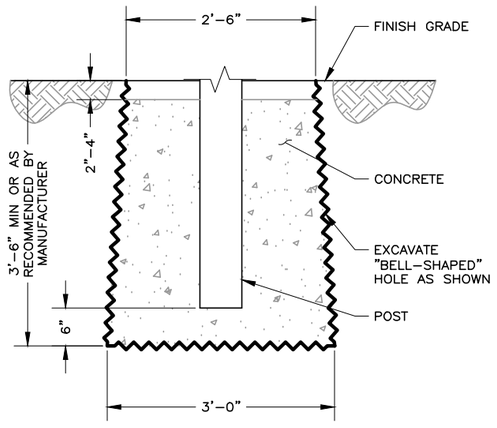


POST FOUNDATION — C / –
NTS

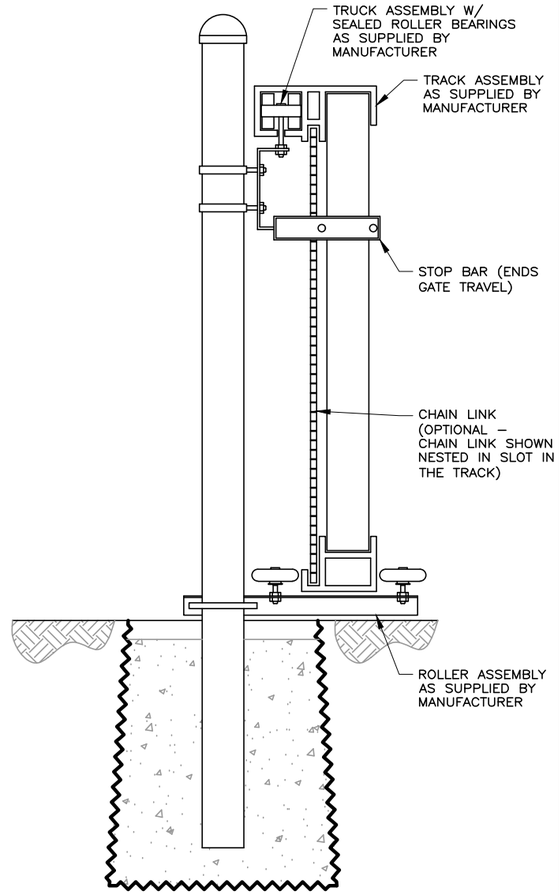


SLIDE GATE ASSEMBLY
(LOOKING DOWN TRACK) — B / –
NTS

GENERAL SHEET NOTES:

1. CRITICAL DIMENSIONS

| | |
|---|---|
| MINIMUM GATE CLEAR OPENING: | 20'–0" |
| TOP OF GATE HEIGHT: | 8'–0" |
| POST HEIGHT: | 8'–0" |
| ADJOINING FENCE HEIGHT: | 8'–0" |
| BARB ARMS REQUIRED: | NO |
| GATE STORAGE IN OPEN POSITION (OUTSIDE LOOKING IN – RIGHT SHOWN) | RIGHT |

LICENSED PROFESSIONAL ENGINEER
4/19/24
No. 5052482
GREGORY S. THOMAS
STATE OF UTAH

| | | | | | | | |
|---|---|---|---|---|---|---|---|
| DESIGNED | ACS | 3 | | | | | |
| DRAFTED | TPB | 2 | | | | | |
| CHECKED | GST | 1 | | | | | |
| DATE | APRIL 2024 | NO. | DATE | REVISIONS | | BY | APVD. |

SCALE: AS SHOWN

SOUTH SALT LAKE

DOWNTOWN SEWER IMPROVEMENTS AND PUMP STATION
CIVIL
CANTILEVER GATE DETAILS

SHEET C–504
126.42.300

FILE NAME: PROJECTS\126 – SOUTH SALT LAKE CITY\42.200 – ZELLER AND DOWNTOWN SEWER IMPROVEMENTS\CAD\2 – DOWNTOWN AND PUMP STATION\C–504 CANTILEVER GATE DETAILS.DWG
FILE DATE: 3.5.2024 17:58:31 (MAJ)
7/04

DETAIL NOTES:

1. VARIANCE FROM SPECIFIED DIMENSIONS AND SLOPES MUST BE ACCEPTABLE TO ENGINEER. SYSTEM CONFIGURATION MAY BE CHANGED AT ENGINEER'S DISCRETION.
2. BASE COURSE: UNTREATED BASE COURSE, SECTION 32 11 13.
3. EXPANSION JOINT FILLER: 1/2–INCH THICK TYPE F1 FULL DEPTH, SECTION 03 25 00.
4. CONCRETE: CLASS 4000, SECTION 03 30 00. HIGH EARLY STRENGTH CONCRETE MIXES MUST BE APPROVED BY ENGINEER. USE OF HIGH EARLY STRENGTH CONCRETE MAY RESULT IN CONCRETE CRAZING (SPIDER CRACKS) IF AIR TEMPERATURE EXCEEDS 90 DEGREES F.
5. CONCRETE CURING AGENT: CLEAR MEMBRANE FORMING COMPOUND WITH FUGITIVE DYE (TYPE ID CLASS A). INSTALL PER SECTION 03 30 00.
6. BASE COURSE PLACEMENT: THICKNESS IF 6–INCH IF FLOW LINE GRADE IS 0.5 PERCENT (S=0.005) OR GREATER. IF SLOPE IS LESS, PROVIDE 8–INCHES. MAXIMUM LIFT THICKNESS BEFORE COMPACTION IS 8–INCHES WHEN USING RIDING EQUIPMENT OR 6–INCHES WHEN USING HAND HELD EQUIPMENT. COMPACTION IS 95 PERCENT OR GREATER RELATIVE TO A MODIFIED PROCTOR DENSITY (ASTM D–1557).
7. CONCRETE PLACEMENT: SECTIONS 03 10 00 AND 03 30 00.
   A. INSTALL EXPANSION JOINTS VERTICAL, FULL DEPTH, WITH TOP FILLER SET FLUSH WITH CONCRETE SURFACE. INSTALL AT THE START OF END OF THE STREET INTERSECTION CURB RETURN. EXPANSION JOINTS ARE NOT REQUIRED IN CONCRETE PLACEMENT USING SLIP–FORM CONSTRUCTION.
   B. INSTALL CONTRACTION JOINTS VERTICAL, 1/8–INCH WIDE OR 1/4 SLAB THICKNESS IF THE SLAB IS GREATER THAN 8–INCHES THICK. MATCH JOINT LOCATION IN ADJACENT PORTLAND–CEMENT CONCRETE ROADWAY PAVEMENT.
   C. PROVIDE 1/2–INCH RADIUS EDGES. APPLY A BROOM FINISH. APPLY A CURING AGENT.
8. PROTECTION AND REPAIR: PROTECT CONCRETE FROM DEICING CHEMICALS DURING CURE. REPAIR CONSTRUCTION THAT DOES NOT DRAIN. IF NECESSARY, FILL FLOW–LINE WITH WATER TO VERIFY.

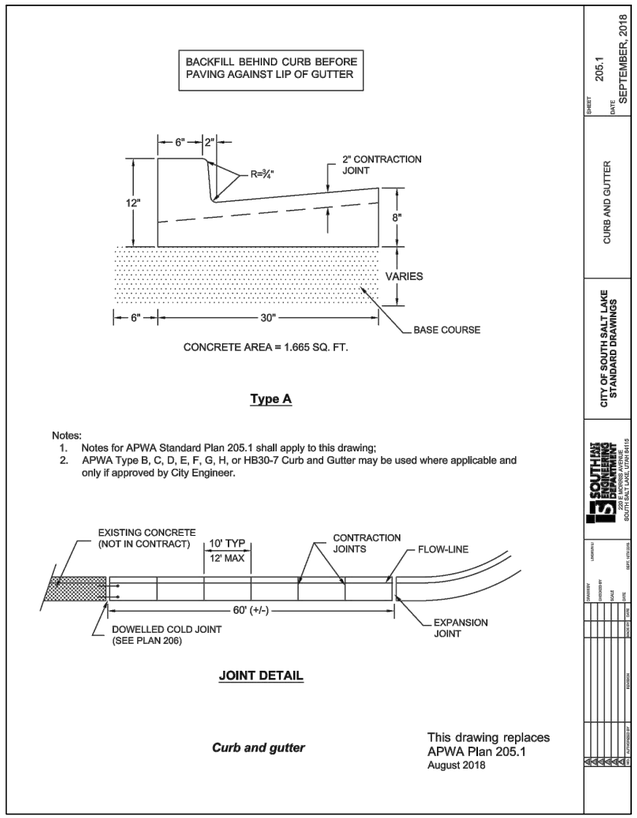


CURB AND GUTTER | A | —
NTS

DETAIL NOTES:

1. VARIANCE FROM SPECIFIED DIMENSIONS AND SLOPES MUST BE ACCEPTABLE TO ENGINEER. SYSTEM CONFIGURATION MAY BE CHANGED AT ENGINEER'S DISCRETION.
2. BASE COURSE: UNTREATED BASE COURSE, SECTION 32 11 13.
3. EXPANSION JOINT FILLER: 1/2–INCH THICK TYPE F1 FULL DEPTH, SECTION 03 25 00.
4. CONCRETE: CLASS 4000, SECTION 03 30 00. HIGH EARLY STRENGTH CONCRETE MIXES MUST BE APPROVED BY ENGINEER. USE OF HIGH EARLY STRENGTH CONCRETE MAY RESULT IN CONCRETE CRAZING (SPIDER CRACKS) IF AIR TEMPERATURE EXCEEDS 90 DEGREES F.
5. REINFORCEMENT: GALVANIZED OR EPOXY COASTED, DEFORMED, 60 KSI YIELD GRADE STEEL, ASTM A615.
6. CONCRETE CURING AGENT: CLEAR MEMBRANE FORMING COMPOUND WITH FUGITIVE DYE (TYPE ID CLASS A). INSTALL PER SECTION 03 30 00.
7. BASE COURSE PLACEMENT: THICKNESS IF 6–INCH IF FLOW LINE GRADE IS 0.5 PERCENT (S=0.005) OR GREATER. IF SLOPE IS LESS, PROVIDE 8–INCHES. MAXIMUM LIFT THICKNESS BEFORE COMPACTION IS 8–INCHES WHEN USING RIDING EQUIPMENT OR 6–INCHES WHEN USING HAND HELD EQUIPMENT. COMPACTION IS 95 PERCENT OR GREATER RELATIVE TO A MODIFIED PROCTOR DENSITY (ASTM D–1557).
8. CONCRETE PLACEMENT: SECTIONS 03 10 00 AND 03 30 00.
   A. INSTALL EXPANSION JOINTS VERTICAL, FULL DEPTH, WITH TOP FILLER SET FLUSH WITH CONCRETE SURFACE. INSTALL AT THE START OF END OF THE STREET INTERSECTION CURB RETURN. EXPANSION JOINTS ARE NOT REQUIRED IN CONCRETE PLACEMENT USING SLIP–FORM CONSTRUCTION.
   B. INSTALL CONTRACTION JOINTS VERTICAL, 1/8–INCH WIDE OR 1/4 SLAB THICKNESS IF THE SLAB IS GREATER THAN 8–INCHES THICK. MATCH JOINT LOCATION IN ADJACENT PORTLAND–CEMENT CONCRETE ROADWAY PAVEMENT.
   C. PROVIDE 1/2–INCH RADIUS EDGES. APPLY A BROOM FINISH. APPLY A CURING AGENT.
9. PROTECTION AND REPAIR: PROTECT CONCRETE FROM DEICING CHEMICALS DURING CURE. REPAIR CONSTRUCTION THAT DOES NOT DRAIN. IF NECESSARY, FILL FLOW–LINE WITH WATER TO VERIFY.

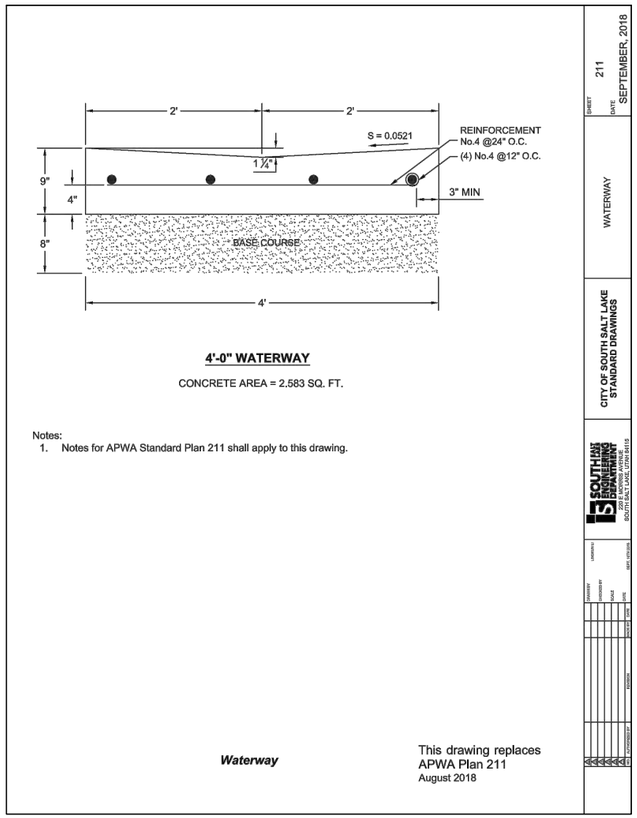


WATERWAY | B | B
NTS | — | C–101

DETAIL NOTES:

1. CASTINGS: GREY IRON CLASS 35 MINIMUM, ASTM A48, COATED WITH ASPHALT BASED PAINT OR BETTER (EXCEPT ON MACHINED SURFACES).
   A. CAST THE HEAD NUMBER ON THE FRAME AND COVER.
   B. GIVE THE FRAME AND COVER A MACHINE FINISH SO THE COVER WILL NOT ROCK.
   C. √ DESIGNATES MACHINED SURFACE.
   D. CAST THE WORDS "SEWER" ON THE COVER IN UPPER CASE FLUSH WITH THE SURFACE FINISH.
2. EXCEPT IN PAVED STREETS, PROVIDE LOCKING MANHOLE COVERED IN EASEMENTS, ALLEYS, PARKING LOTS, AND ALL OTHER PLACES. DRILL AND TAP TWO HOLES TO THE DEPTH OF 1–INCH AT 90 DEGREES TO PRY HOLE AND INSTALL 3/4 X 3/4–INCH ALLEN SOCKET SET SCREWS.

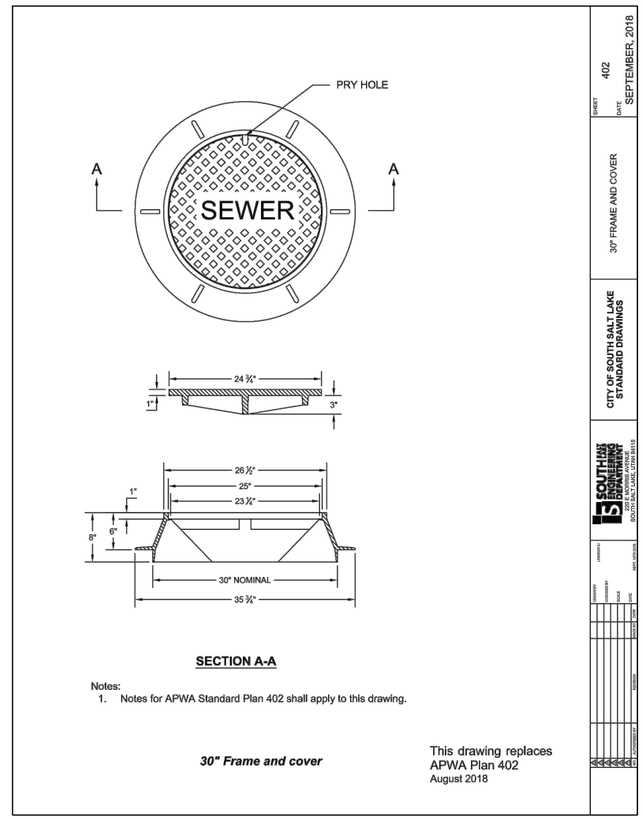


30" FRAME AND COVER | C | C | C
NTS | — | C–801 | C–802
C | C
C–803 | C–805

FILE NAME: PROJECTS\126 – SOUTH SALT LAKE CITY\42.200 – ZELLER AND DOWNTOWN SEWER IMPROVEMENTS\CAD\2 – DOWNTOWN AND PUMP STATION\C–701 SSL DETAILS 1.DWG
FILE DATE: 3.5.2024 18:00:27 (MAJ)

HANSEN ALLEN & LUCE, Inc. ENGINEERS
LICENSED PROFESSIONAL ENGINEER 4/19/24 No. 5052482 GREGORY S. THOMAS STATE OF UTAH

| | | | | | | |
|---|---|---|---|---|---|---|
| DESIGNED | ACS | 3 | | | | |
| DRAFTED | TPB, SWM | 2 | | | | |
| CHECKED | GST | 1 | | | | |
| DATE | APRIL 2024 | NO. | DATE | REVISIONS | BY | APVD. |

SCALE: AS SHOWN

SOUTH SALT LAKE

DOWNTOWN SEWER IMPROVEMENTS AND PUMP STATION
CIVIL
SOUTH SALT LAKE STANDARD DETAILS I

SHEET C–701
126.42.300

7/04

FILE NAME: PROJECTS\126 - SOUTH SALT LAKE CITY\42.200 - ZELLER AND DOWNTOWN SEWER IMPROVEMENTS\CAD\2 - DOWNTOWN AND PUMP STATION\C-702 SSL DETAILS II.DWG
FILE DATE: 3.5.2024 18:31:43 (MAJ)

DETAIL NOTES:

1. VARIANCE FROM SPECIFIED DIMENSIONS AND SLOPES MUST BE ACCEPTABLE TO ENGINEER. SYSTEM CONFIGURATION MAY BE CHANGED AT ENGINEER'S DISCRETION.
2. BASE COURSE: UNTREATED BASE COURSE, SECTION 32 11 13.
3. EXPANSION JOINT FILLER: 1/2–INCH THICK TYPE F1 FULL DEPTH, SECTION 03 25 00.
4. CONCRETE: CLASS 4000, SECTION 03 30 00. HIGH EARLY STRENGTH CONCRETE MIXES MUST BE APPROVED BY ENGINEER. USE OF HIGH EARLY STRENGTH CONCRETE MAY RESULT IN CONCRETE CRAZING (SPIDER CRACKS) IF AIR TEMPERATURE EXCEEDS 90 DEGREES F.
5. CONCRETE CURING AGENT: CLEAR MEMBRANE FORMING COMPOUND WITH FUGITIVE DYE (TYPE ID CLASS A). INSTALL PER SECTION 03 30 00.
6. BASE COURSE PLACEMENT: MAXIMUM LIFT THICKNESS BEFORE COMPACTION IS 8–INCHES WHEN USING RIDING EQUIPMENT OR 6–INCHES WHEN USING HAND HELD EQUIPMENT. COMPACTION IS 95 PERCENT OR GREATER RELATIVE TO A MODIFIED PROCTOR DENSITY (ASTM D–1557).
7. CONCRETE PLACEMENT: SECTIONS 03 10 00 AND 03 30 00.
   A. INSTALL EXPANSION JOINTS VERTICAL, FULL DEPTH, WITH TOP FILLER SET FLUSH WITH CONCRETE SURFACE.
   B. INSTALL CONTRACTION JOINTS VERTICAL, 1/8–INCH WIDE OR 1/4 SLAB THICKNESS IF THE SLAB IS GREATER THAN 8–INCHES THICK. MAXIMUM LENGTH TO WIDTH RATIO FOR NON–SQUARE PANELS IS 1.5 TO 1. MAXIMUM PANEL LENGTH (IN FEET) IS 1.5 TIMES THE SLAB THICKNESS (IN INCHES).
   C. PROVIDE 1/2–INCH RADIUS EDGES. APPLY A BROOM FINISH. APPLY A CURING AGENT.

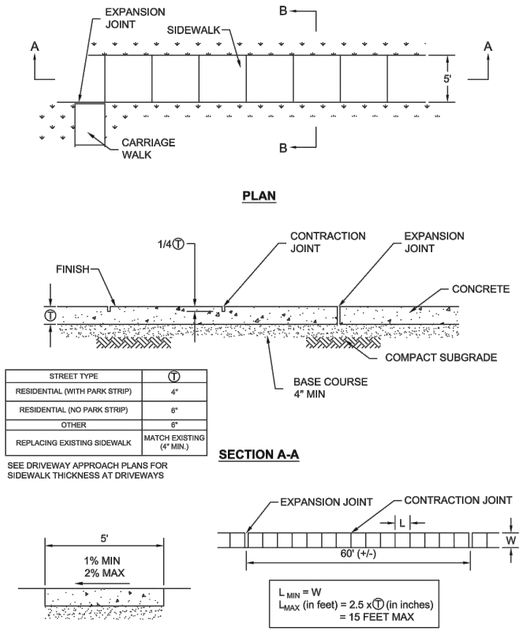


*Sidewalk*

This drawing replaces APWA Plan231
August 2018

SIDEWALK | A
NTS | —

DETAIL NOTES:

1. DECK IS MADE FOR ROUND MANHOLE RISER GRADE RINGS.
2. CONCRETE: CLASS 4000, SECTION 03 30 00.
3. REINFORCEMENT: DEFORMED, 60 KSI YIELD GRADE STEEL, ASTM A615.
4. CONCRETE PLACEMENT: SECTIONS 03 10 00 AND 03 30 00. APPLY A CURING AGENT.
5. REINFORCEMENT: PLACEMENT SECTION 03 20 00.

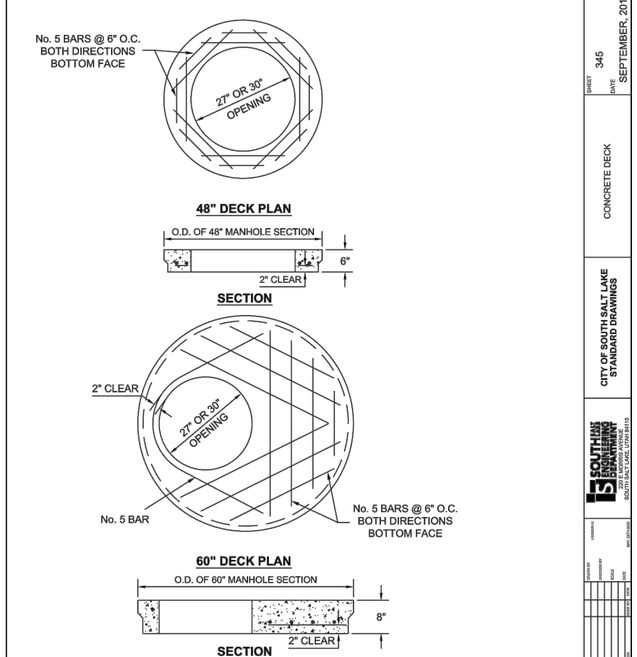


*Concrete deck*

This drawing replaces APWA Plan 345
August 2018

CONCRETE DECK | B | B
NTS | — | C–804

DETAIL NOTES:

1. IN A PAVEMENT SURFACE, THE CONCRETE WILL SUPPORT THE FRAME UNDER TRAFFIC LOADINGS.
2. CONCRETE: CLASS 4000, SECTION 03 30 00.
3. CONCRETE CURING AGENT: CLEAR MEMBRANE FORMING COMPOUNT WITH FUIGITIVE DYE (TYPE ID CLASS A), SECTION 03 30 00.
4. PAVEMENT PREPARATION: PROVIDE A NEAT VERTICAL AND CONCENTRIC JOINT BETWEEN CONCRETE AND EXISTING BITUMINOUS CONCRETE SURFACES. CLEAN EDGES OF ALL DIRT, OIL, AND LOOSE DEBRIS.
5. CONCRETE PLACEMENT: SECTIONS 03 10 00 AND 03 30 00. FILL THE ANNULAR SPACE AROUND THE FRAME AND COVER CASTING WITH CONCRETE. APPLY A BROOM FINISH. APPLY A CURING AGENT.

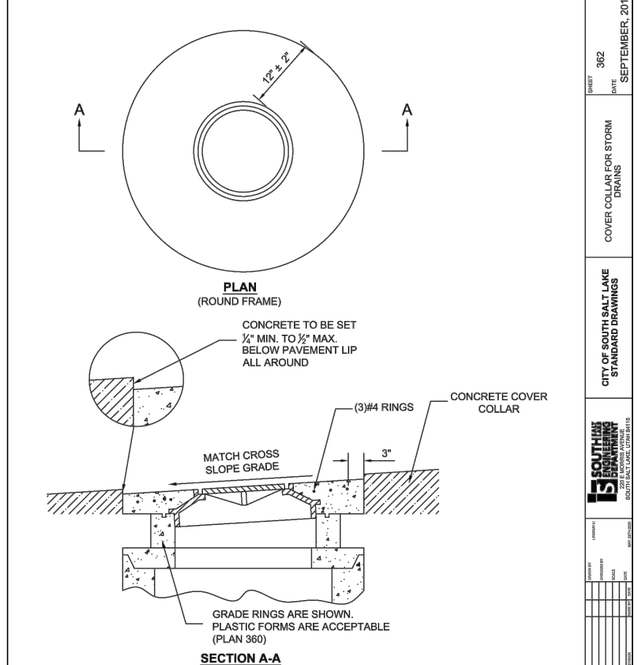


*Cover collar for storm drains*

This drawing replaces APWA Plan 362
August 2018

CONCRETE COLLAR FOR STORM DRAINS | C | C | C | C | C
NTS | — | C–801 | C–802 | C–803 | C–804 | C–805

HANSEN ALLEN & LUCE inc ENGINEERS

LICENSED PROFESSIONAL ENGINEER
4/19/24
No. 5052482
GREGORY S. TWEEDY
STATE OF UTAH

| | | | | | | |
|---|---|---|---|---|---|---|
| DESIGNED | ACS | 3 | | | | |
| DRAFTED | TPB | 2 | | | | |
| CHECKED | GST | 1 | | | | |
| DATE | APRIL 2024 | NO. | DATE | REVISIONS | BY | APVD. |

SCALE: AS SHOWN

SOUTH SALT LAKE

DOWNTOWN SEWER IMPROVEMENTS AND PUMP STATION
CIVIL
SOUTH SALT LAKE STANDARD DETAILS II

SHEET C–702
126.42.300

7/04

FILE NAME: PROJECTS\126 - SOUTH SALT LAKE CITY\42.200 - ZELLER AND DOWNTOWN SEWER IMPROVEMENTS\CAD\2 - DOWNTOWN AND PUMP STATION\C-703 SSL DETAILS III.DWG
FILE DATE: 3.5.2024 18:33:00 (MAJ)

## BACKFILL AND PANEL TIE-IN

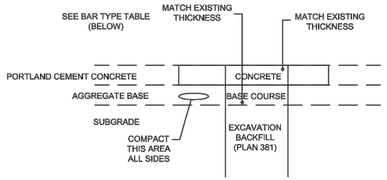


**BACKFILL**

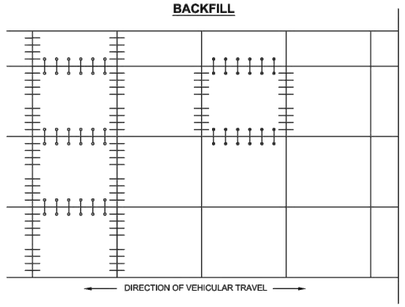


| BAR TYPE | BAR TYPE TABLE |
|---|---|
| ⟷ | 30" LONG No. 5 TIE BARS AT 30" O.C. |
| ⟷ | 30" LONG No. 5 TIE BARS AT 15" O.C. |
| — | 18" LONG DOWEL BARS - SEE TABLE 1 |

| TABLE 1 | |
|---|---|
| PAVEMENT THICKNESS | DOWEL DIAMETER |
| LESS THAN 9" | 1" |
| ≥ 9" AND < 11" | 1.25" |
| 11" OR GREATER | 1.5" |

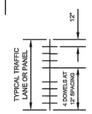


**PANEL TIE-IN**

Notes:
1. Notes for APWA Standard Plan 256.2 shall apply to this drawing.

***Concrete pavement patch***

This drawing replaces
APWA Plan 256.2
August 2018

SHEET 256.2
DATE SEPTEMBER, 2018

CONCRETE PAVEMENT PATCH

CITY OF SOUTH SALT LAKE
STANDARD DRAWINGS

SOUTH SALT LAKE PUBLIC WORKS DEPARTMENT
220 EAST MORRIS AVENUE, SUITE 200
SOUTH SALT LAKE, UTAH 84115

DRAWN | CHECKED | DATE | DESIGN

DETAIL NOTES:

1. REPRODUCE EXISTING PAVEMENT JOINT LAYOUT EVEN IF REPAIRS STRADDLE AN EXISTING JOINT. DETERMINE EXTENT AND DIMENSIONS OF REMOVAL FROM DRAWINGS, OR ACCEPTABLE TO ENGINEER. FORM ANY SIDE THAT DOES NOT HAVE AN ADJACENT PANEL. FORM TO MATCH EXISTING PANELS PROVIDING A VERTICAL EDGE.
2. BASE COURSE: UNTREATED BASE COURSE, SECTION 32 11 13.
3. REINFORCEMENT: 60 KSI YIELD GRADE STEEL, ASTM A615 EPOXY COATED OR GALVANIZED DEFORMED OR SMOOTH WITH DIAMETER AND LENGTH INDICATED.
   A. DOWEL BAR: SMOOTH
   B. TIE BAR: DEFORMED
   C. MAT: DEFORMED
4. DOWEL BAR END CAP: NON-METALLIC THAT ALLOWS 1/4 INCH LONGITUDINAL MOVEMENT OF BAR.
5. EXPANSION JOINT FILLER (IF REQUIRED): F-1: BITUMINOUS (ASPHALT OR TAR) MASTIC, ASTM D994. FORMED AND ENCASED BETWEEN TWO (2) LAYERS OF BITUMINOUS SATURATED FELT OR TWO (2) LAYERS OF GLASS-FIBER FELT.
6. CONTRACTION JOINT FILLER (BACKER ROD) (IF REQUIRED): ASPHALT BASE TYPE, ASTM D3405, OR ELASTOMERIC TYPE, ASTM D3406. ONE COMPONENT, FOR PORTLAND CEMENT CONCRETE PAVEMENTS.
7. TACKIFIER: EPOXY GEL TYPE II,
8. ADHESIVE: EPOXY ADHESIVE GROUT, SECTION 03 60 00 FOR GLUING BARS IN DRILLING HOLES IN CONCRETE.
9. BOND BREAKER (GREASE): PARAFFIN WAX, LITHIUM GREASE, OR OTHER SEMI-SOLID, INERT LUBRICANT.
10. CONCRETE: CLASS 4000, SECTION 03 30 00.
11. CONCRETE CURING AGENT: WHITE PIGMENTED MEMBRANE FORMING COMPOUND (TYPE II CLASS A OR B), SECTION 03 30 00.
12. WATER REPELLANT: PENETRATING COMPOUND, SECTION 07 19 00.
13. BASE COURSE PLACEMENT: SECTION 32 11 23. MAXIMUM LIFT THICKNESS BEFORE COMPACTION IS 8-INCHES WHEN USING RIDING EQUIPMENT OR 6-INCHES WHEN USING HAND HELD EQUIPMENT. COMPACTION IS 95 PERCENT OR GREATER RELATIVE TO A MODIFIED PROCTOR DENSITY (ASTM D-1557).
14. PREPARATION: MAKE FULL DEPTH SAW CUTS AROUND PERIMETER OF THE RECTANGULAR SECTION TO BE REMOVED. DO NOT OVER CUT. MAKE FULL DEPTH RECUTS ALONG ANY EDGE THAT IS DAMAGED DURING REPAIRS, INCLUDING FAILURES ON THE UNDERNEATH OF THE SLAB CAUSED BY INSUFFICIENT SAWCUT DEPTHS.
15. JOINT PREPARATION: USE A RIGID DRILL FRAME TO DRILL HOLES IN THE VERTICAL CENTER OF THE ADJACENT CONCRETE PANEL. DRILL HOLES PARALLEL TO THE PANEL SURFACE. DRILL HOLES AT MID-DEPTH OF SLAB. PROVIDE THE SPECIFIED SPACE BETWEEN DRILL HOLES. FOR DOWEL BARS, DRILL THE HOLES PARALLEL TO THE THOROUGHFARE CENTERLINE. LIMIT DEVIATION FROM PARALLEL TO 1/4-INCH IN THE LENGTH OF THE DOWEL BAR. CLEAN VERTICAL SURFACE OF THE ADJACENT CONCRETE. REMOVE CONTAMINANTS FROM HOLES.
   A. TACKIFIER REQUIRED ON VERTICAL SURFACE OF COLD JOINT, BOTH TRANSVERSE AND HORIZONTAL. DO NOT APPLY BOND BREAKER TO COLD JOINTS.
16. REINFORCEMENT: REMOVE DIRT, DUST, AND RUST FROM BARS. DO NOT INSTALL TIE BARS THAT INTERFERE WITH DOWEL BARS.
   A. FOR TIE BARS, PLACE ADHESIVE AT THE BACK OF EACH HOLE SO ADHESIVE FLOWS OUT, AROUND, AND FULLY ENCASES EACH INSERTED BAR. DO NOT COAT ONE END OF THE BAR AND THEN INSERT THE BAR INTO THE HOLE. PREVENT LOSS OF ADHESIVE UPON INSERTION.
   B. FOR DOWEL BARS, PLACE GREASE AT THE BACK OF EACH HOLE SO GREASE FLOWS OUT, AROUND, AND FULLY ENCASES EACH INSERTED BAR. GREASE THE BAR BEFORE INSERTION.
   C. GREASE PROTRUDING DOWEL BAR PRIOR TO CONCRETE PLACEMENT.
17. BOND BREAKER: PLACE BOND BREAKER ON ALL PAVEMENT JOINTS THAT COMPOSE EXISTING JOINTS, BOTH TRANSVERSE AND HORIZONTAL.
18. CONCRETE PLACEMENT: REPACK LOOSE BARS AND DAMPEN BASE COURSE UNIFORMLY. ALLOW FIRM SET OF ADHESIVE PRIOR TO PLACING CONCRETE. PLACE CONCRETE, CONSOLIDATE ALONG FACE OF EXISTING CONCRETE PANELS AND UNDER REINFORCEMENT, KEEP VIBRATORS AWAY FROM REINFORCING STEEL, AND PREVENT SEGREGATION. MATCH ADJACENT SURFACE TEXTURE.
19. CURE: APPLY CURING AGENT IN TOTAL COVERAGE IN 2 DIRECTIONS AFTER TEXTURING. KEEP CURE TEMPERATURE EVEN THROUGHOUT EXTENT AND DEPTH OF CONCRETE PATCH.
20. TRAFFIC: NOT ALLOWED ON PATCH UNTIL CONCRETE STRENGTH IS ACHIEVED.
21. SURFACE DISTORTIONS: AFTER CURE, REMOVE SURFACE DISTORTIONS THAT EXCEED 1/4-INCH DEVIATION IN 10-FEET. APPLY WATER REPELLANT TO SURFACES RECEIVING GRINDING.
22. FINISH: TEXTURE SURFACE TO MATCH EXISTING. DO NOT TOOL JOINTS THAT ARE TO BE SAWCUT AND SEALED.
23. REPAIR: REMOVE AND REPLACE ANY CONCRETE SLAB REPLACEMENT THAT EXHIBIT CRACKING, SHRINKAGE, OR FAILURE CAUSED BY TRAFFIC.

CONCRETE PAVEMENT PATCH — A
NTS — —

LICENSED PROFESSIONAL ENGINEER
4/19/24
No. 5052482
GREGORY S. TWEEDIE
STATE OF UTAH

HANSEN ALLEN & LUCE inc ENGINEERS

| | | | | | | | |
|---|---|---|---|---|---|---|---|
| DESIGNED | ACS | 3 | | | | | |
| DRAFTED | MAJ | 2 | | | | | |
| CHECKED | GST | 1 | | | | | |
| DATE | APRIL 2024 | NO. | DATE | REVISIONS | | BY | APVD. |

SCALE: AS SHOWN

SOUTH SALT LAKE

DOWNTOWN SEWER IMPROVEMENTS AND PUMP STATION
CIVIL
SOUTH SALT LAKE STANDARD DETAILS III

SHEET C-703
126.42.300

7/04

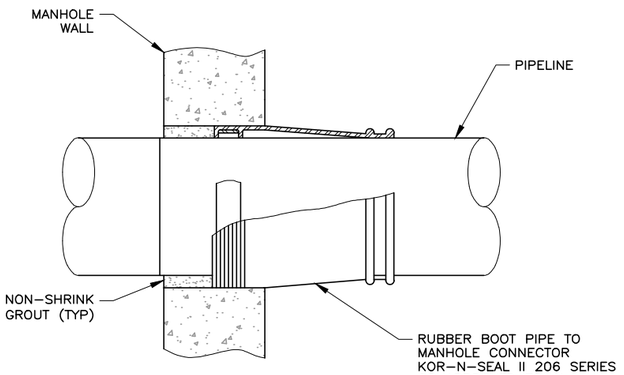


RUBBER BOOT — NTS — A — | A C-802 | A C-803 | A C-805

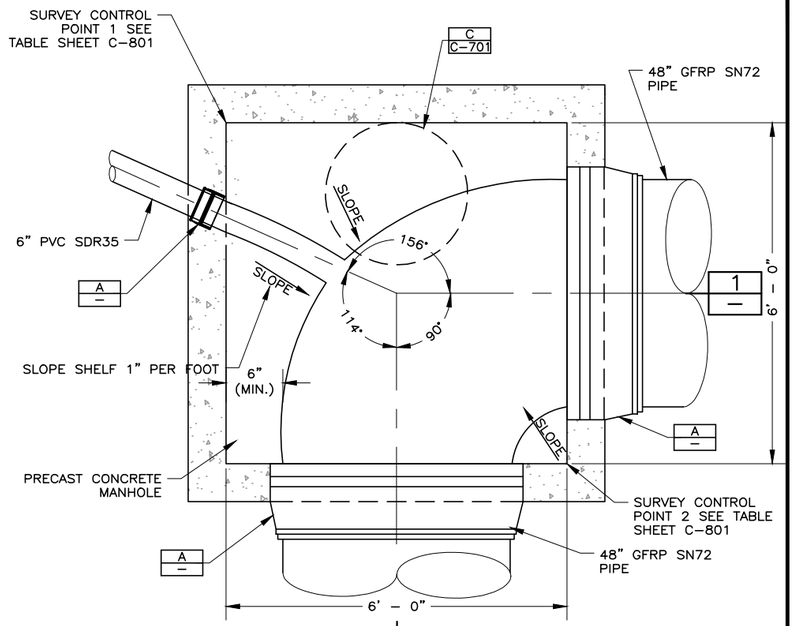


MH-250 — NTS — B — PP-101

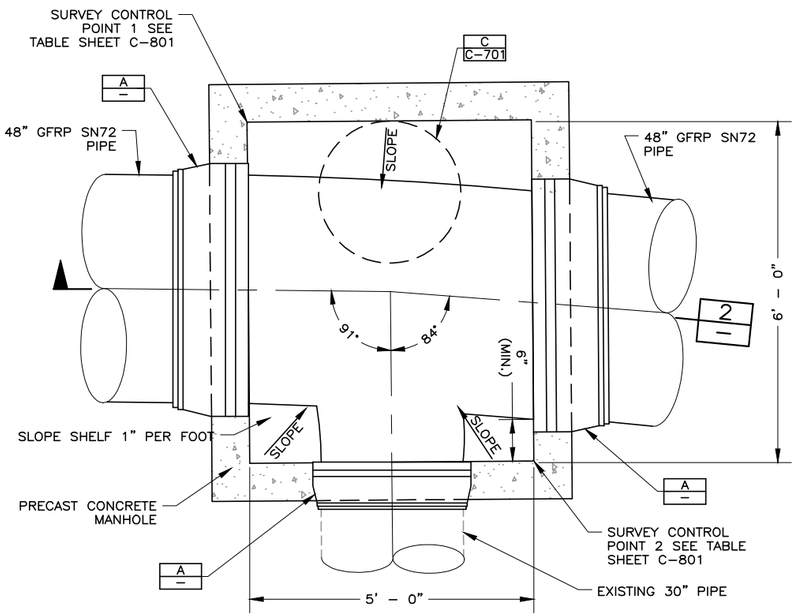


MH-251 — NTS — C — PP-101

| MANHOLE LOCATIONS | | | | |
|---|---|---|---|---|
| | CONTROL POINT 1 | | CONTROL POINT 2 | |
| MANHOLE NUMBER | NORTHING | EASTING | NORTHING | EASTING |
| MH-250 | 7,432,218.98 | 1,527,602.87 | 7,432,212.98 | 1,527,608.87 |
| MH-251 | 7,432,218.93 | 1,527,626.14 | 7,432,213.03 | 1,527,631.26 |
| MH-202 | 7,432,271.73 | 1,527,736.79 | 7,432,263.27 | 1,527,737.44 |
| MH-211 | 7,432,156.89 | 1,529,630.05 | 7,432,150.87 | 1,529,636.03 |
| MH-212 | 7,432,611.66 | 1,529,631.75 | 7,432,605.64 | 1,529,637.73 |

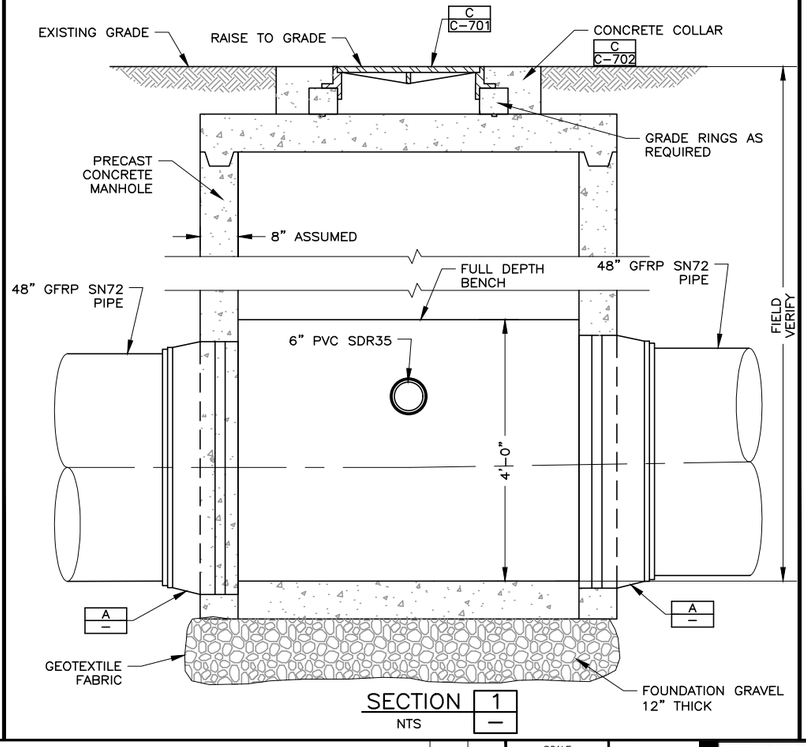


SECTION — NTS — 1 — —

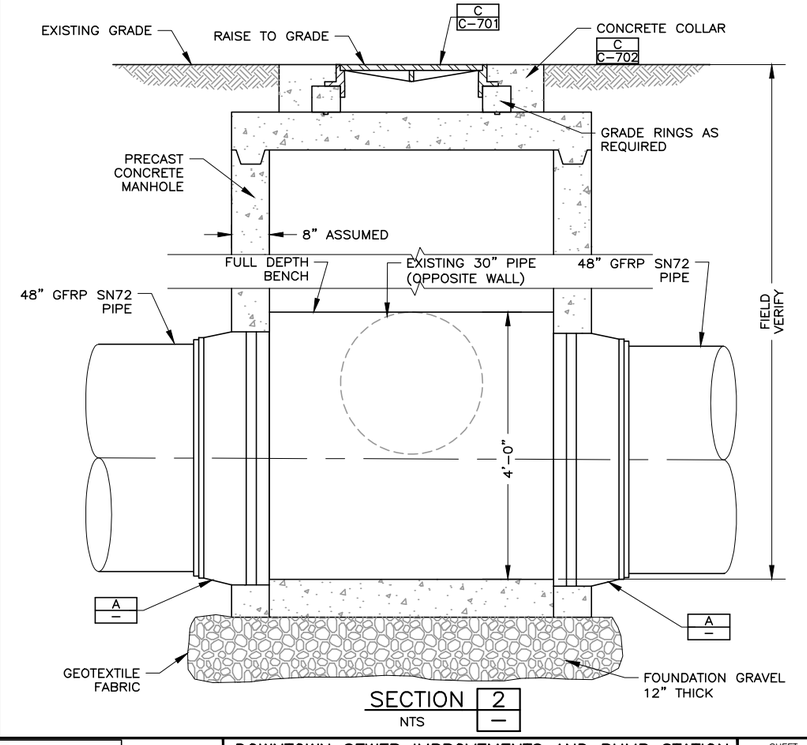


SECTION — NTS — 2 — —

FILE NAME: PROJECTS\126 - SOUTH SALT LAKE CITY\42.200 - ZELLER AND DOWNTOWN SEWER IMPROVEMENTS\CAD\2 - DOWNTOWN AND PUMP STATION\C-801 MH DETAILS.DWG
FILE DATE: 3.6.2024 08:45:36 (MAJ)

LICENSED PROFESSIONAL ENGINEER — 4/19/24 — No. 5052482 — GREGORY S. TOBIAS — STATE OF UTAH

HANSEN ALLEN & LUCE inc ENGINEERS

| | | | | | | | |
|---|---|---|---|---|---|---|---|
| DESIGNED | ACS | 3 | | | | | |
| DRAFTED | TPB | 2 | | | | | |
| CHECKED | GST | 1 | | | | | |
| DATE | APRIL 2024 | NO. | DATE | REVISIONS | | BY | APVD. |

SCALE: NOT TO SCALE

SOUTH SALT LAKE

DOWNTOWN SEWER IMPROVEMENTS AND PUMP STATION
CIVIL
MANHOLE DETAILS

SHEET C-801

126.42.300

7/04

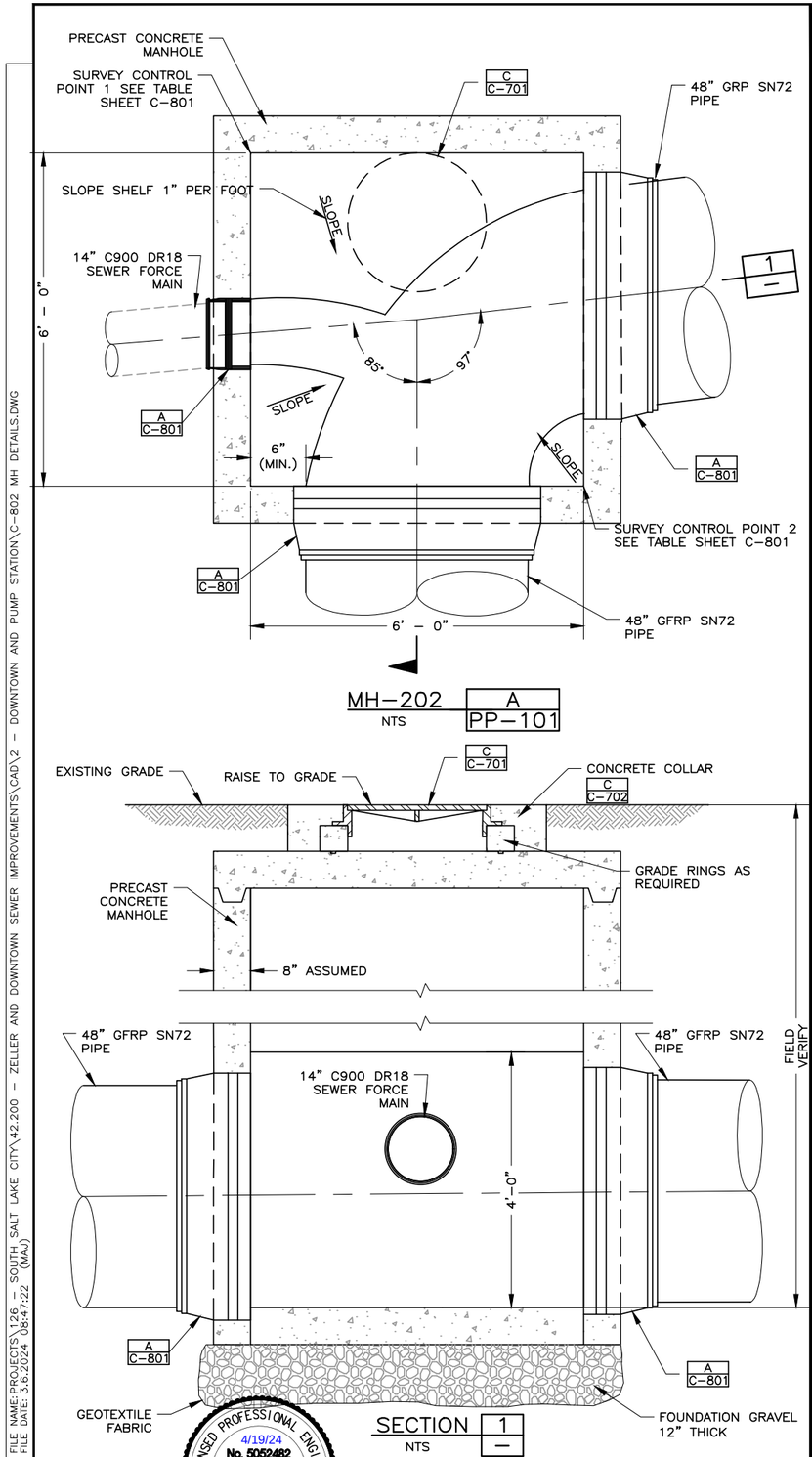


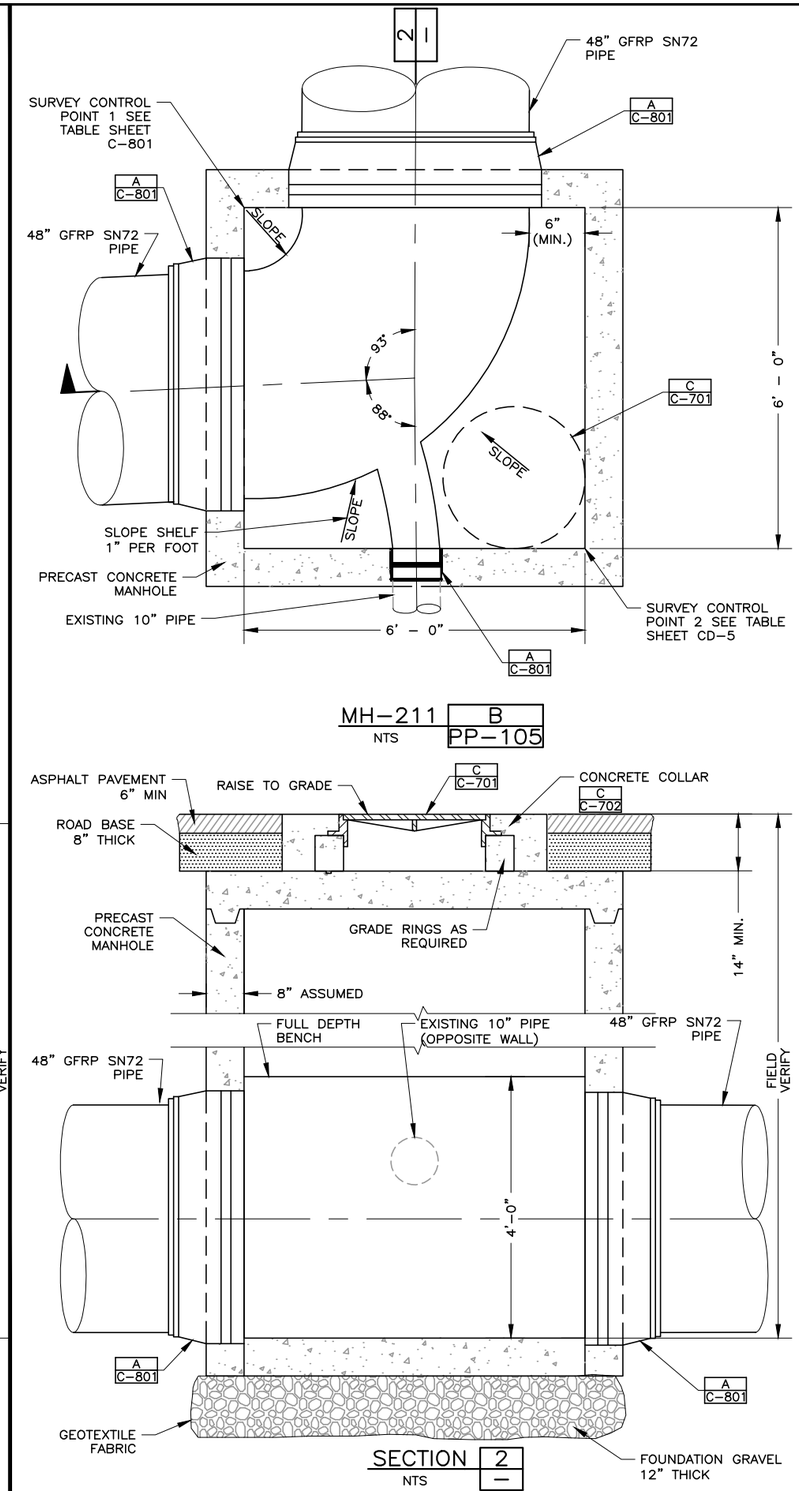


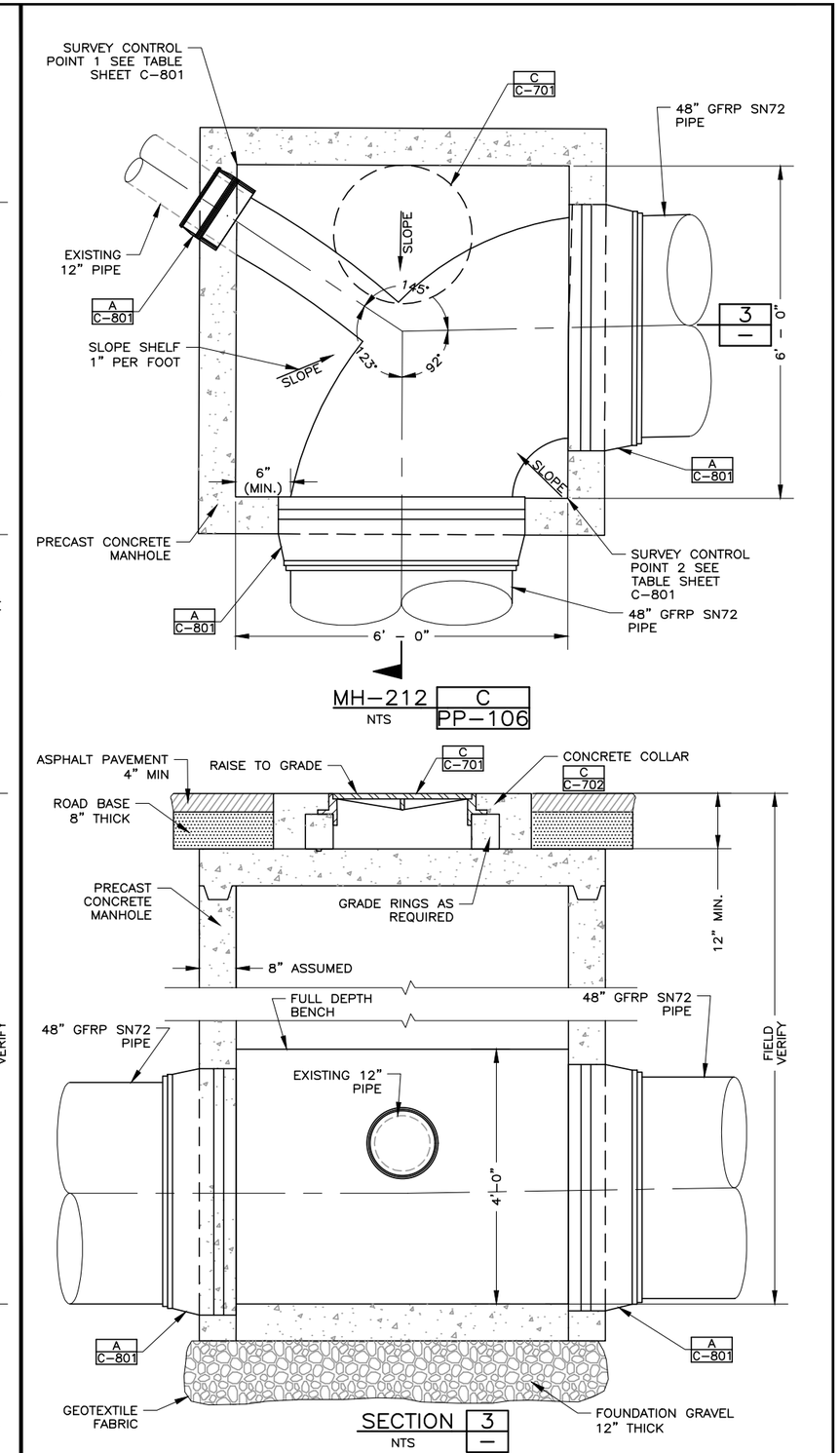


FILE NAME: PROJECTS\126 - SOUTH SALT LAKE CITY\42.200 - ZELLER AND DOWNTOWN SEWER IMPROVEMENTS\CAD\2 - DOWNTOWN AND PUMP STATION\C-802 MH DETAILS.DWG
FILE DATE: 3.6.2024 08:47:22 (MAJ)

LICENSED PROFESSIONAL ENGINEER 4/19/24 No. 5052482 GREGORY S. THOMAS STATE OF UTAH

HANSEN ALLEN & LUCE inc ENGINEERS

| | | | | | | |
|---|---|---|---|---|---|---|
| DESIGNED ACS | 3 | | | | | |
| DRAFTED TPB | 2 | | | | | |
| CHECKED GST | 1 | | | | | |
| DATE APRIL 2024 | NO. | DATE | REVISIONS | BY | APVD. | |

SCALE NOT TO SCALE

SOUTH SALT LAKE

DOWNTOWN SEWER IMPROVEMENTS AND PUMP STATION
CIVIL
MANHOLE DETAILS

SHEET C-802
126.42.300

7/04

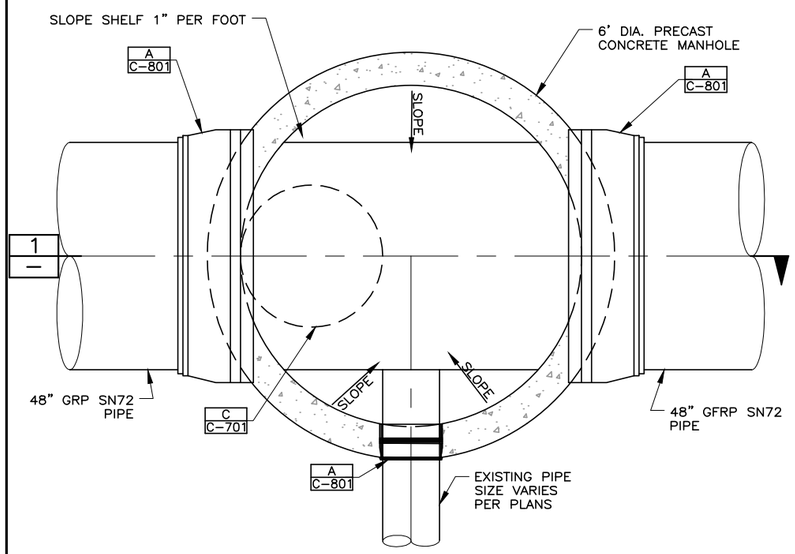


TYPICAL 6' DIA MANHOLE — NTS

| A | A | A | A |
|---|---|---|---|
| PP-101 | PP-103 | PP-104 | PP-105 |

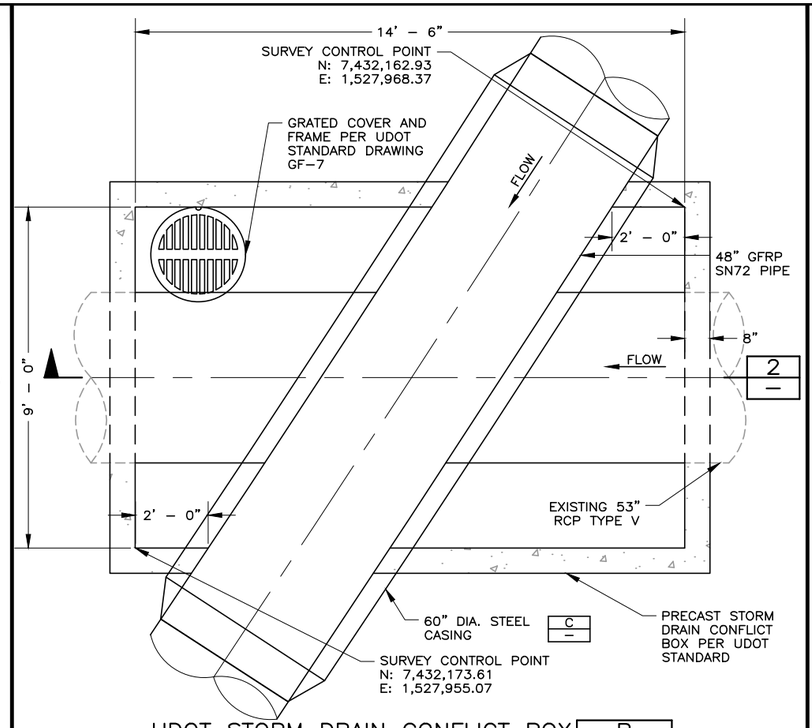


UDOT STORM DRAIN CONFLICT BOX — NTS

| B |
|---|
| PP-101 |

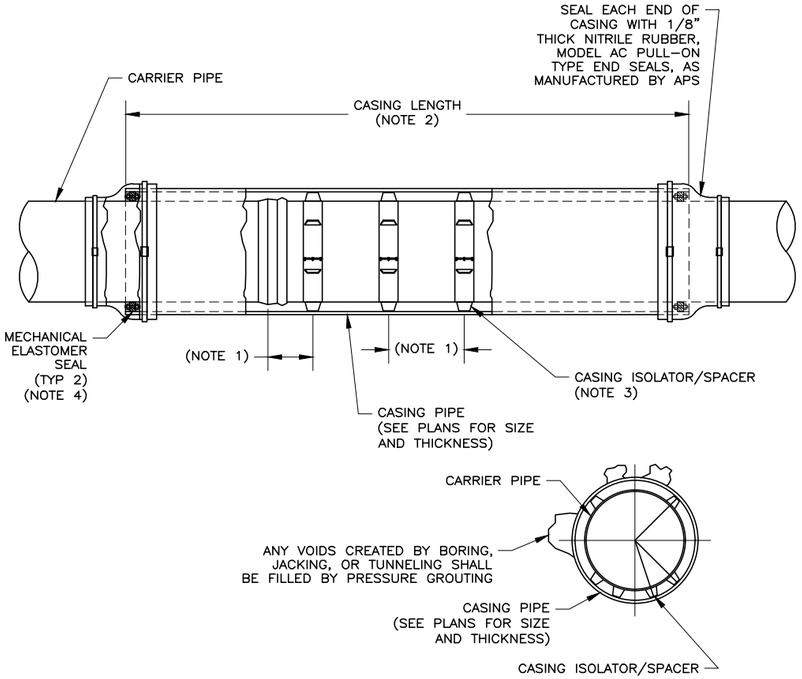


STEEL CASING — NTS

| C | C |
|---|---|
| – | PP-203 |

NOTES:

1. CARRIER PIPE WITHIN CASING SHALL BE SUPPORTED BY CASING SPACERS. THE NUMBER OF CASING SPACERS, THE SPACING BETWEEN THE CASING SPACERS, AND THE SPACING OF THE SPACERS FROM THE CARRYING PIPE JOINTS SHALL BE IN ACCORDANCE WITH THE RECOMMENDATIONS OF THE MANUFACTURER, BUT IN NO CASE SHALL SPACERS BE SPACED GREATER THAN 5 FEET. SPACERS SHALL CENTER THE CARRIER PIPE WITHIN THE CASING PIPE AND THE CARRIER PIPE SHALL BE A CONTINUOUS GRADE AS SHOWN ON THE DRAWINGS. THE SPACERS SHALL BE SIZED TO BE CAPABLE OF SUPPORTING THE WEIGHT OF THE CARRIER PIPE AT MAXIMUM SANITARY SEWER FLOWS. SPACERS SHALL BE SECURELY ATTACHED TO THE CARRIER PIPE PER MANUFACTURER'S REQUIREMENTS. CASING SPACERS FOR STEEL CASING SHALL ELECTRICALLY ISOLATE THE CASING AND CARRIER PIPING.
2. STEEL CASING LENGTH SHOWN ON PLANS IS MINIMUM. LONGER CASINGS TO ACCOMMODATE MANUFACTURING STANDARDIZATION SHALL BE SHOWN ON SHOP DRAWINGS.
3. ISOLATING CASING SPACERS SHALL BE STAINLESS STEEL MODEL SSI12 AS MANUFACTURED BY APS.
4. MECHANICAL ELASTOMER SEALS SHALL BE USED ON BOTH ENDS OF CASING PIPE. MECHANICAL ELASTOMER SEALS SHALL BE INNERLYNX MODEL OS-316 BY APS.
5. ALL CARRIER PIPE JOINTS SHALL BE FULLY RESTRAINED WHEN WITHIN CASING. CARRIER PIPE SHALL BE TESTED BEFORE SEALING THE ENDS OF THE CASING.
6. CASING PIPE SHALL BE WELDED STEEL PER APWA STANDARD SPECIFICATION 33 05 23.35 OR AS REQUIRED FOR JACKING OPERATIONS.
7. CASING PIPE SHALL MEET UTA STANDARDS AND REQUIREMENTS FOR CASINGS. JACK AND BORE STEEL CASING MUST EXTEND 5-FEET OUTSIDE OF UTA RIGHT-OF-WAY LINES. UTA SHALL CONFIRM THE LIMITS OF THE CASING.

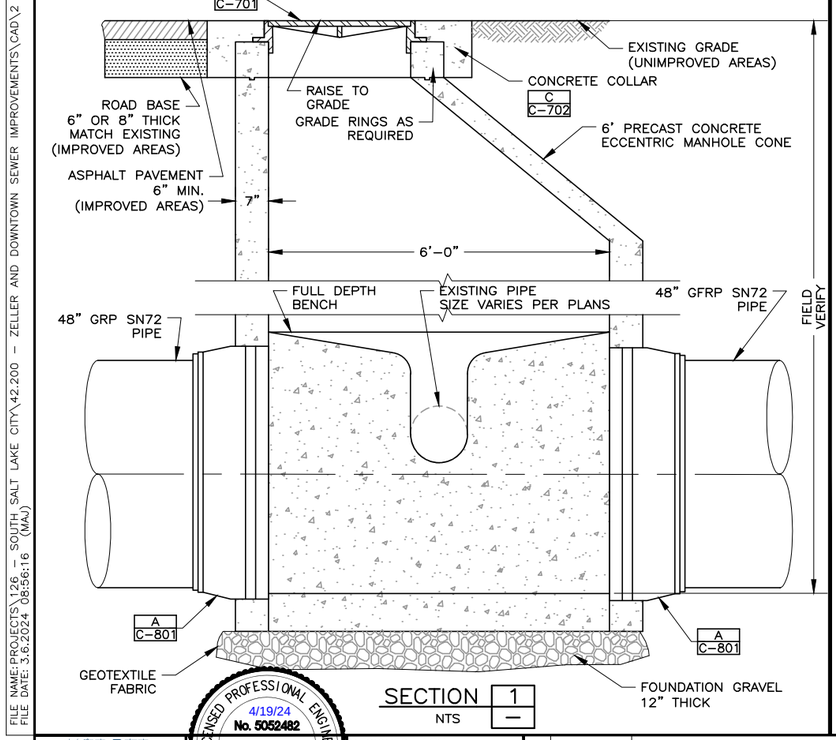


SECTION 1 — NTS

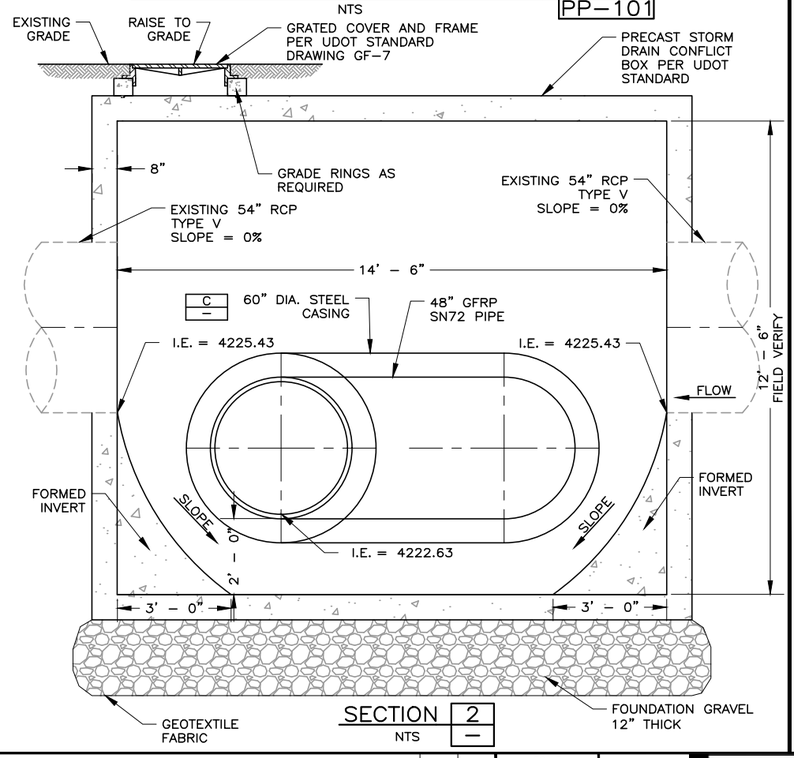


SECTION 2 — NTS

FILE NAME: PROJECTS\126 – SOUTH SALT LAKE CITY\42.200 – ZELLER AND DOWNTOWN SEWER IMPROVEMENTS\CAD\2 – DOWNTOWN AND PUMP STATION\C-803 MH DETAILS.DWG
FILE DATE: 3.6.2024 08:56:16 (MAJ)

LICENSED PROFESSIONAL ENGINEER — 4/19/24 — No. 5052482 — GREGORY S. THOMAS — REGISTERED ENGINEER

HANSEN ALLEN & LUCE inc ENGINEERS

| | | | | | | |
|---|---|---|---|---|---|---|
| DESIGNED | ACS | 3 | | | | |
| DRAFTED | TPB | 2 | | | | |
| CHECKED | GST | 1 | | | | |
| DATE | APRIL 2024 | NO. | DATE | REVISIONS | BY | APVD. |

SCALE: NOT TO SCALE

SOUTH SALT LAKE

DOWNTOWN SEWER IMPROVEMENTS AND PUMP STATION
CIVIL
MANHOLE DETAILS

SHEET C-803
126.42.300

7/24

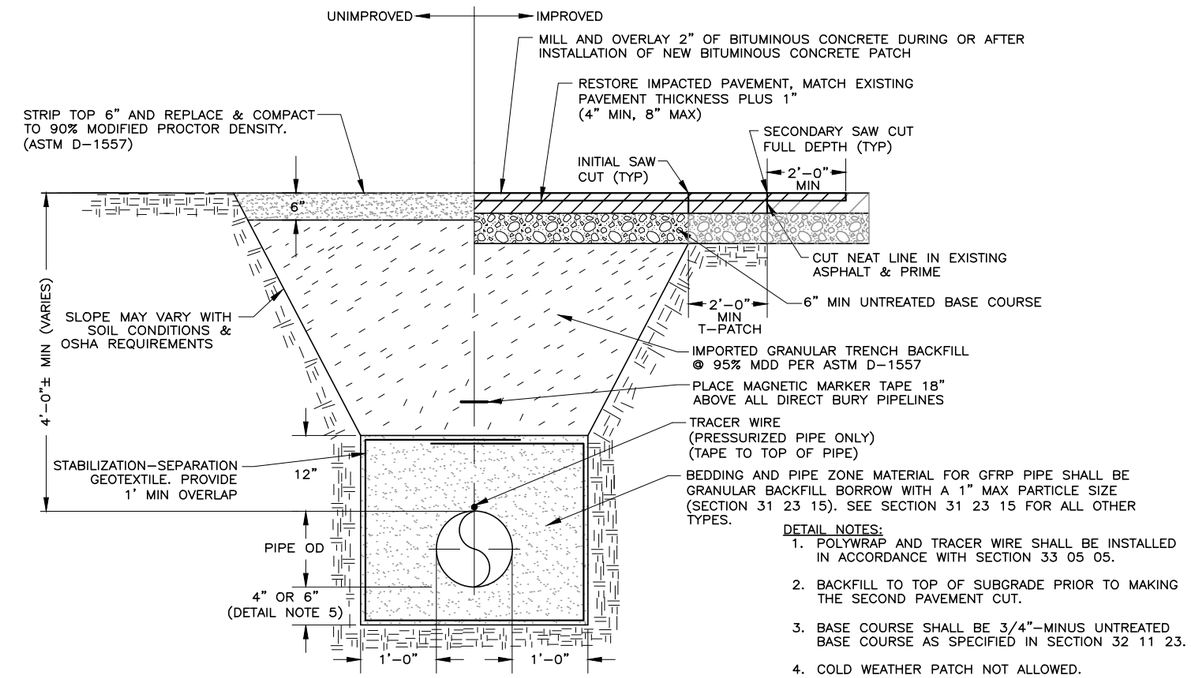


DETAIL NOTES:
1. POLYWRAP AND TRACER WIRE SHALL BE INSTALLED IN ACCORDANCE WITH SECTION 33 05 05.
2. BACKFILL TO TOP OF SUBGRADE PRIOR TO MAKING THE SECOND PAVEMENT CUT.
3. BASE COURSE SHALL BE 3/4"-MINUS UNTREATED BASE COURSE AS SPECIFIED IN SECTION 32 11 23.
4. COLD WEATHER PATCH NOT ALLOWED.
5. DEPTH OF PIPE ZONE MATERIAL BELOW PIPE (BEDDING) SHALL BE 4" (MIN) FOR PIPE UP TO 24" DIA, AND 6" (MIN) FOR PIPE OVER 24" DIA.

TYPICAL PIPELINE TRENCH DETAIL — A — NTS

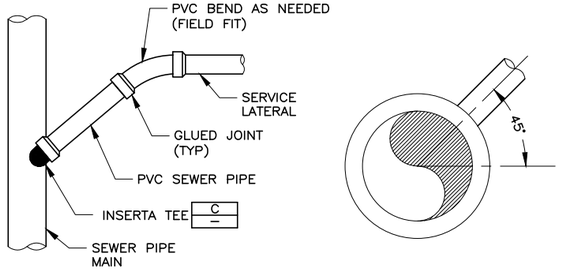


DETAIL C —

DETAIL NOTES:
1. FOR LATERAL CONNECTION TO HDPE PIPE, INSTALL INSERTA TEE (OR APPROVED EQUAL), SIZE TO MATCH LATERAL. INCLUDE GROUT AROUND CONNECTION TO SEWER MAIN.
2. CONNECT EXISTING LATERAL TO NEW PVC SDR-35 LATERAL WITH FERNCO STRONG BACK RC 1000 SERIES COUPLING.

TYPICAL SERVICE TO MAIN DETAIL — B — NTS

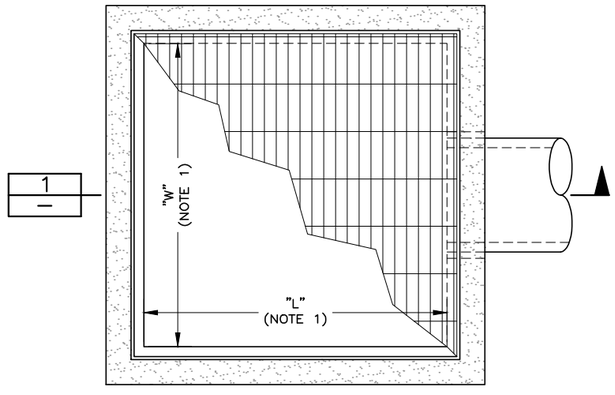


PLAN

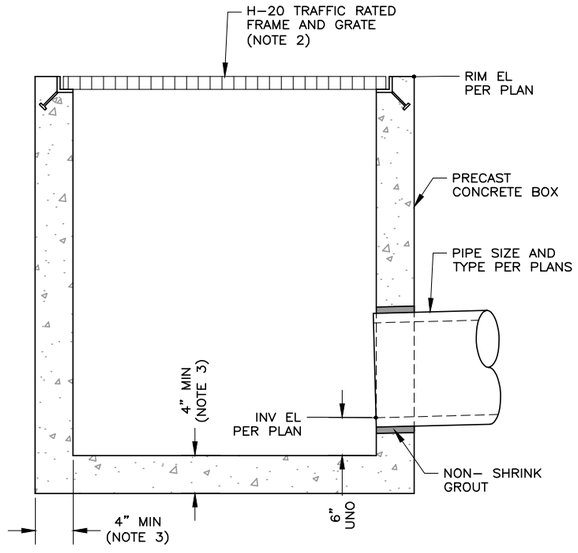


SECTION 1 — NTS

DETAIL NOTES:
1. INSIDE LENGTH AND WIDTH OF PRECAST BOX SHALL BE AS CALLED OUT IN PLANS.
2. FRAME AND GRATE SHALL BE CAST IRON OR GALVANIZED STEEL W/ BICYCLE SAFE GRATING. SIZE TO MATCH INSIDE DIMENSIONS OF BOX.
3. WALL AND BASE THICKNESS AND REINFORCEMENT SHALL BE AS REQUIRED BY MANUFACTURER FOR REQUIRED LOADS.

TYPICAL INLET BOX — D PP-301 — D PP-302 — NTS

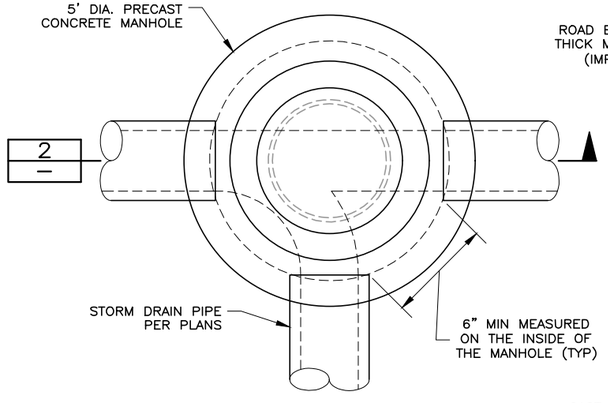


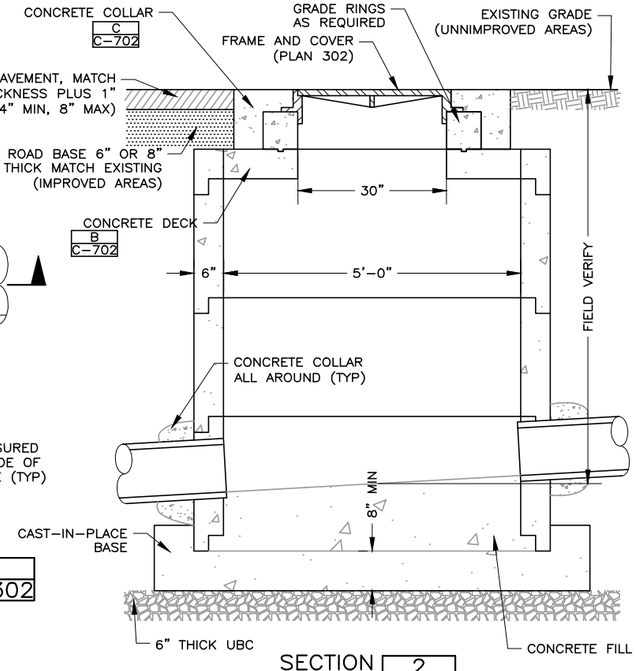


TYPICAL 5' DIA SD MANHOLE — E PP-301 — E PP-302 — NTS

SECTION 2 — NTS

LICENSED PROFESSIONAL ENGINEER
4/19/24
No. 5052482
GREGORY S. TWEEDY
STATE OF UTAH

HANSEN ALLEN & LUCE inc ENGINEERS

| | | | | | | |
|---|---|---|---|---|---|---|
| DESIGNED | ACS | 3 | | | | |
| DRAFTED | MAJ | 2 | | | | |
| CHECKED | GST | 1 | | | | |
| DATE | APRIL 2024 | NO. | DATE | REVISIONS | BY | APVD. |

SCALE: NOT TO SCALE

SOUTH SALT LAKE

DOWNTOWN SEWER IMPROVEMENTS AND PUMP STATION
CIVIL
MISCELLANEOUS DETAILS I

SHEET C-804
126.42.300

FILE NAME: PROJECTS\126 - SOUTH SALT LAKE CITY\42.200 - ZELLER AND DOWNTOWN SEWER IMPROVEMENTS\CAD\2 - DOWNTOWN AND PUMP STATION\C-804 MISC DETAILS 1.DWG
FILE DATE: 3.6.2024 08:59:36 (MAJ)
7/04

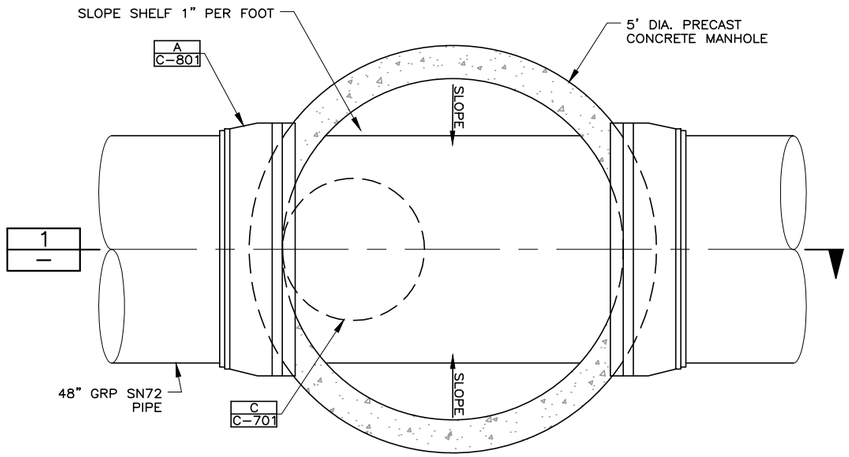


## TYPICAL 5' DIA MANHOLE

NTS

| A | A | A | A | A |
|---|---|---|---|---|
| PP-101 | PP-102 | PP-103 | PP-104 | PP106 |

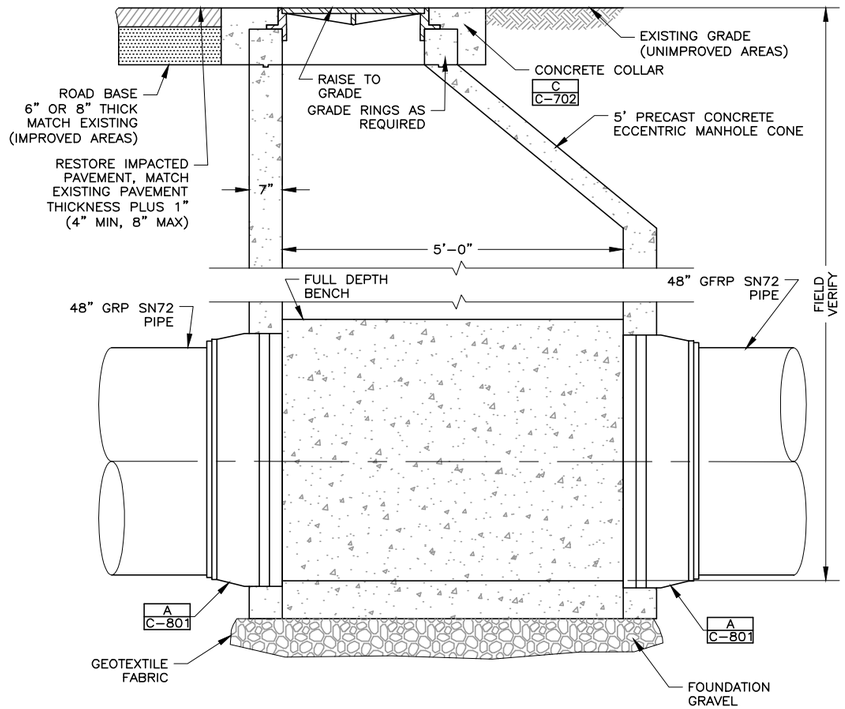


## SECTION 1 — NTS — —

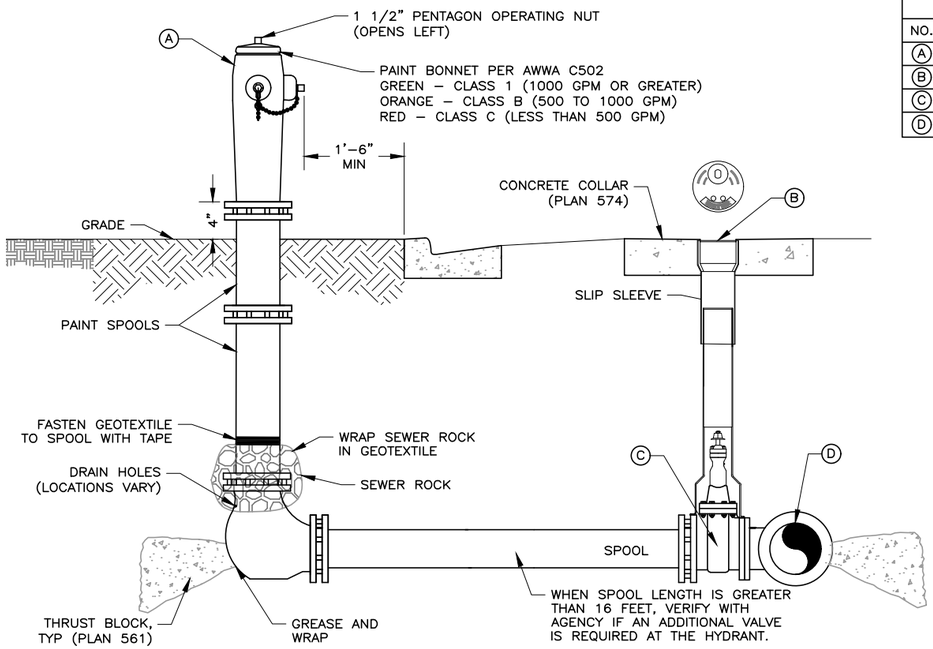


## FIRE HYDRANT SECTION B — NTS — PP-104

| LEGEND | | | |
|---|---|---|---|
| NO. | * | ITEM | DESCRIPTION |
| A | | FIRE HYDRANT | AWWA C502 |
| B | | VALVE BOX WITH LID | 2-PIECE CAST IRON |
| C | | GATE VALVE WITH 2" X 2" NUT | AWWA C509 |
| D | | TEE WITH 125 # FLANGE | AWWA C110 |

DETAIL NOTES:

1. BEFORE BACKFILLING, SECURE INSPECTION OF INSTALLATION BY ENGINEER.
2. ADDITIONAL REQUIREMENTS ARE SPECIFIED IN APWA SECTION 33 11 00.
3. HYDRANT: DRY BARREL, AWWA C502.
4. THRUST BLOCKS: CONCRETE CLASS 4000, APWA SECTION 03 30 04.
5. REINFORCEMENT: DEFORMED, 60 KSI YIELD GRADE STEEL, ASTM A615.
6. BACKFILL: APWA SECTION 31 05 13. MAXIMUM PARTICLE SIZE 2-INCHES.
   A. SEWER ROCK: ASTM SIZE NO. 3 (2" TO 1") OR LARGER.
   B. OTHER TYPE OF COMMON FILL: CONTRACTOR'S CHOICE.
7. GEOTEXTILE: STABILIZATION-SEPARATION FABRIC, APWA SECTION 31 05 19.
8. INSTALLATION:
9. A. PROVIDE AT LEAST 1 CUBIC YARD OF SEWER ROCK AROUND DRAIN HOLE AT BASE OF HYDRANT SPOOL. WRAP GEOTEXTILE AROUND SEWER ROCK AND TAPE GEOTEXTILE TO HYDRANT SPOOL TO PREVENT SILTING OF SEWER ROCK.
10. PAINT FIRE HYDRANT TO AGENCY'S FIRE HYDRANT PAINT CODE.
11. APPLY NON-OXIDE GREASE TO ALL BURIED METAL SURFACES. WRAP WITH POLYETHYLENE SHEET AND TAPE WRAP.
12. NOTIFY FIRE DEPARTMENT AS SOON AS HYDRANT IS PLACED IN SERVICE.
13. THRUST BLOCKS: BEFORE POURING CONCRETE, WRAP PIPE SYSTEM WITH POLYETHYLENE SHEET TO PREVENT BONDING OF CONCRETE TO PIPE SYSTEM.
14. THRUST BLOCKS NOT REQUIRED FOR FLANGE OR WELDED PIPE SYSTEMS.
15. BACKFILL: MAXIMUM LIFT THICKNESS IS 8-INCHES BEFORE COMPACTION. COMPACTION IS 95 PERCENT OR GREATER RELATIVE TO A MODIFIED PROCTOR DENSITY, APWA SECTION 31 23 26.

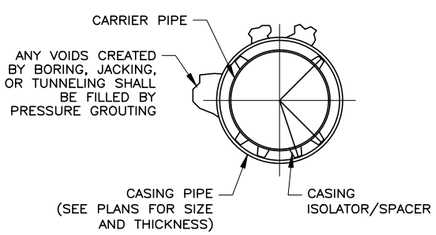


## SECTION 1 — NTS — —

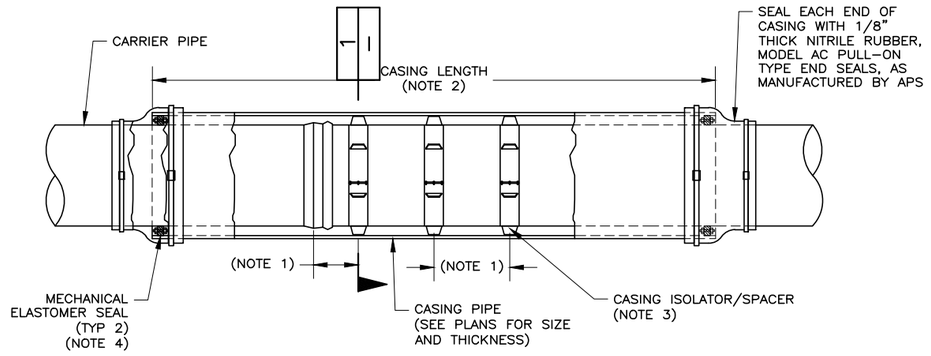


NOTES:

1. CARRIER PIPE WITHIN CASING SHALL BE SUPPORTED BY CASING SPACERS. THE NUMBER OF CASING SPACERS, THE SPACING BETWEEN THE CASING SPACERS, AND THE SPACING OF THE SPACERS FROM THE CARRYING PIPE JOINTS SHALL BE IN ACCORDANCE WITH THE RECOMMENDATIONS OF THE MANUFACTURER, BUT IN NO CASE SHALL SPACERS BE SPACED GREATER THAN 5 FEET. SPACERS SHALL CENTER THE CARRIER PIPE WITHIN THE CASING PIE AND THE CARRIER PIPE SHALL BE A CONTINUOUS GRADE AS SHOWN ON THE DRAWINGS. THE SPACERS SHALL BE SIZED TO BE CAPABLE OF SUPPORTING THE WEIGHT OF THE CARRIER PIPE AT MAXIMUM SANITARY SEWER FLOWS. SPACERS SHALL BE SECURELY ATTACHED TO THE CARRIER PIPE PER MANUFACTURER'S REQUIREMENTS. CASING SPACERS FOR STEEL CASING SHALL ELECTRICALLY ISOLATE THE CASING AND CARRIER PIPING.
2. STEEL CASING LENGTH SHOWN ON PLANS IS MINIMUM. LONGER CASINGS TO ACCOMMODATE MANUFACTURING STANDARDIZATION SHALL BE SHOWN ON SHOP DRAWINGS.
3. ISOLATING CASING SPACERS SHALL BE STAINLESS STEEL MODEL SSI12 AS MANUFACTURED BY APS.
4. MECHANICAL ELASTOMER SEALS SHALL BE USED ON BOTH ENDS OF CASING PIPE. MECHANICAL ELASTOMER SEALS SHALL BE INNERLYNX MODEL OS-316 BY APS.
5. ALL CARRIER PIPE JOINTS SHALL BE FULLY RESTRAINED WHEN WITHIN CASING. CARRIER PIPE SHALL BE TESTED BEFORE SEALING THE ENDS OF THE CASING.
6. CASING PIPE SHALL BE WELDED STEEL PER APWA STANDARD SPECIFICATION 33 05 23.35 OR AS REQUIRED FOR JACKING OPERATIONS.
7. CASING PIPE SHALL MEET UTA STANDARDS AND REQUIREMENTS FOR CASINGS. JACK AND BORE STEEL CASING MUST EXTEND 5-FEET OUTSIDE OF UTA RIGHT-OF-WAY LINES. UTA SHALL CONFIRM THE LIMITS OF THE CASING.

## STEEL CASING C — NTS — PP-203

LICENSED PROFESSIONAL ENGINEER
4/19/24
No. 5052482
GREGORY S. THOMAS
STATE OF UTAH

HANSEN ALLEN & LUCE inc
ENGINEERS

| | | | | | | |
|---|---|---|---|---|---|---|
| DESIGNED | ACS | 3 | | | | |
| DRAFTED | MAJ | 2 | | | | |
| CHECKED | GST | 1 | | | | |
| DATE | APRIL 2024 | NO. | DATE | REVISIONS | BY | APVD. |

SCALE: NOT TO SCALE

SOUTH SALT LAKE

DOWNTOWN SEWER IMPROVEMENTS AND PUMP STATION
CIVIL
MISCELLANEOUS DETAILS II

SHEET C-805

126.42.300

FILE NAME: PROJECTS\126 - SOUTH SALT LAKE CITY\42.200 - ZELLER AND DOWNTOWN SEWER IMPROVEMENTS\CAD\2 - DOWNTOWN AND PUMP STATION\C-805 MISC DETAILS II.DWG
FILE DATE: 3.6.2024 09:06:41 (MAJ)

7/04

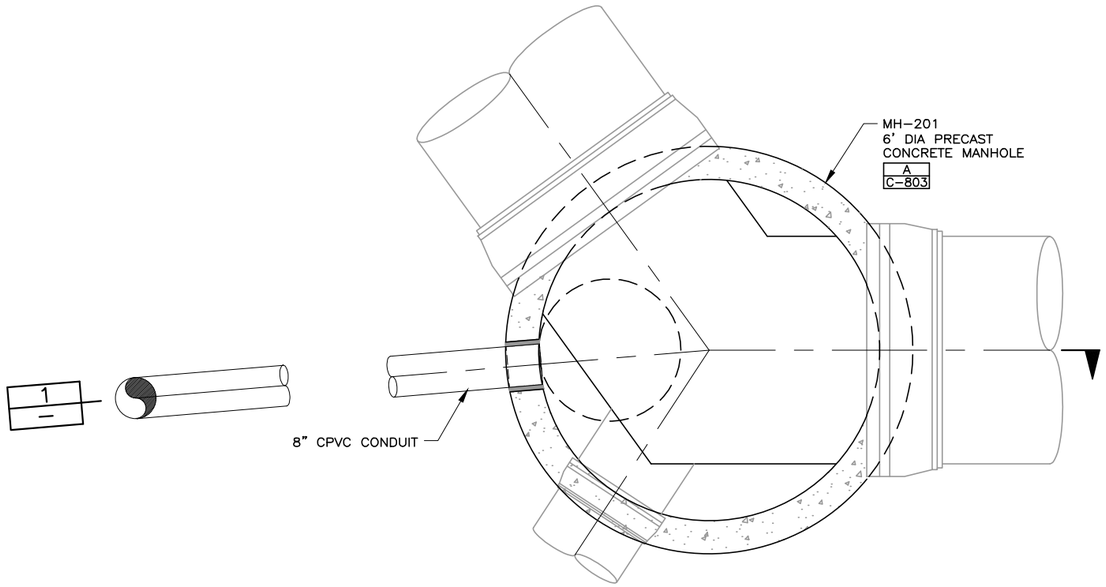


PLAN

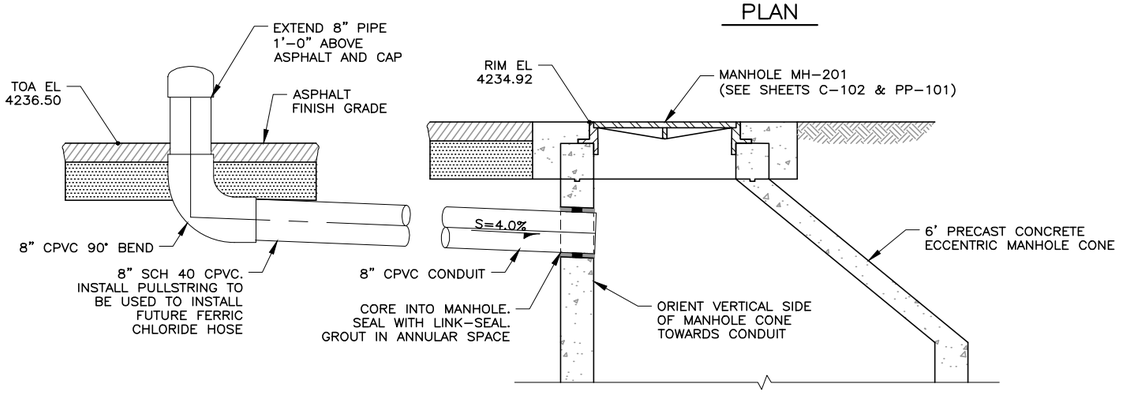


SECTION 1 / – NTS

CONDUIT TO MANHOLE MH–201 CONNECTION A / C–102 NTS

FILE NAME: PROJECTS\126 – SOUTH SALT LAKE CITY\42.200 – ZELLER AND DOWNTOWN SEWER IMPROVEMENTS\CAD\2 – DOWNTOWN AND PUMP STATION\C–806 MISC DETAILS III.DWG
FILE DATE: 3.6.2024 11:09:57 (MAJ)

LICENSED PROFESSIONAL ENGINEER
4/19/24
No. 5052482
GREGORY S. THOMAS
REGISTERED ENGINEER

HANSEN ALLEN & LUCE inc ENGINEERS

| | | | | | | | |
|---|---|---|---|---|---|---|---|
| DESIGNED | ACS | 3 | | | | | |
| DRAFTED | MAJ | 2 | | | | | |
| CHECKED | GST | 1 | | | | | |
| DATE | APRIL 2024 | NO. | DATE | REVISIONS | BY | APVD. | |

SCALE: NOT TO SCALE

SOUTH SALT LAKE

DOWNTOWN SEWER IMPROVEMENTS AND PUMP STATION
CIVIL
MISCELLANEOUS DETAILS III

SHEET C–806

126.42.300

7/04

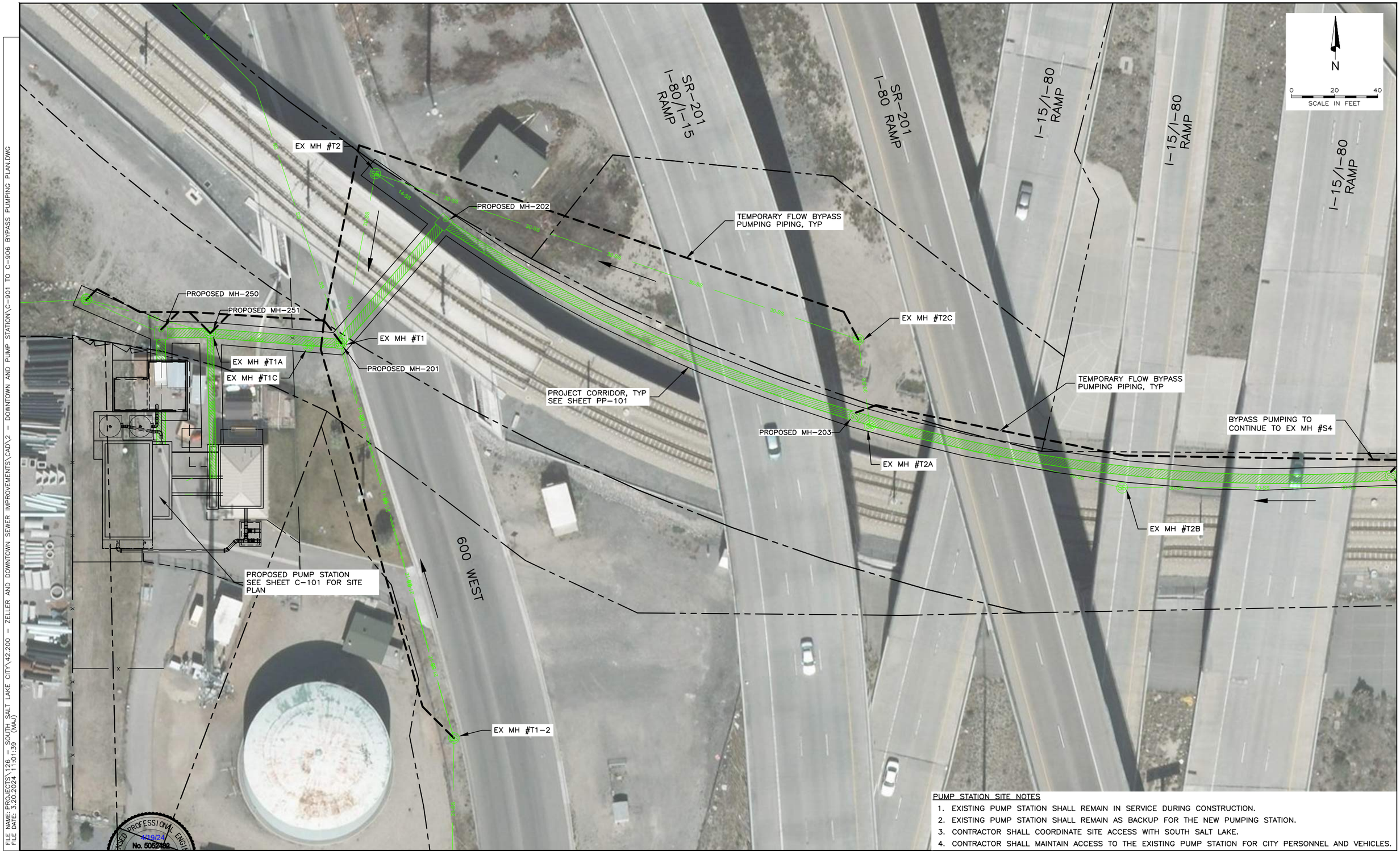


PUMP STATION SITE NOTES

1. EXISTING PUMP STATION SHALL REMAIN IN SERVICE DURING CONSTRUCTION.
2. EXISTING PUMP STATION SHALL REMAIN AS BACKUP FOR THE NEW PUMPING STATION.
3. CONTRACTOR SHALL COORDINATE SITE ACCESS WITH SOUTH SALT LAKE.
4. CONTRACTOR SHALL MAINTAIN ACCESS TO THE EXISTING PUMP STATION FOR CITY PERSONNEL AND VEHICLES.

FILE NAME PROJECTS\126 - SOUTH SALT LAKE CITY\42.200 - ZELLER AND DOWNTOWN SEWER IMPROVEMENTS\CAD\2 - DOWNTOWN AND PUMP STATION\C-901 TO C-906 BYPASS PUMPING PLAN.DWG
FILE DATE: 3.20.2024 11:01:39 (MAJ)

HANSEN ALLEN & LUCE Inc
ENGINEERS

LICENSED PROFESSIONAL ENGINEER
4/19/24
No. 5052480
GREGORY S. THOMAS
REGISTERED ENGINEER

| | | | | | | |
|---|---|---|---|---|---|---|
| DESIGNED | ACS | 3 | | | | |
| DRAFTED | SWM | 2 | | | | |
| CHECKED | GST | 1 | | | | |
| DATE | APRIL 2024 | NO. | DATE | REVISIONS | BY | APVD. |

SCALE: AS SHOWN

SOUTH SALT LAKE

DOWNTOWN SEWER IMPROVEMENTS AND PUMP STATION
CIVIL
BYPASS PUMPING PLAN

SHEET C-901

126.42.300

7/04

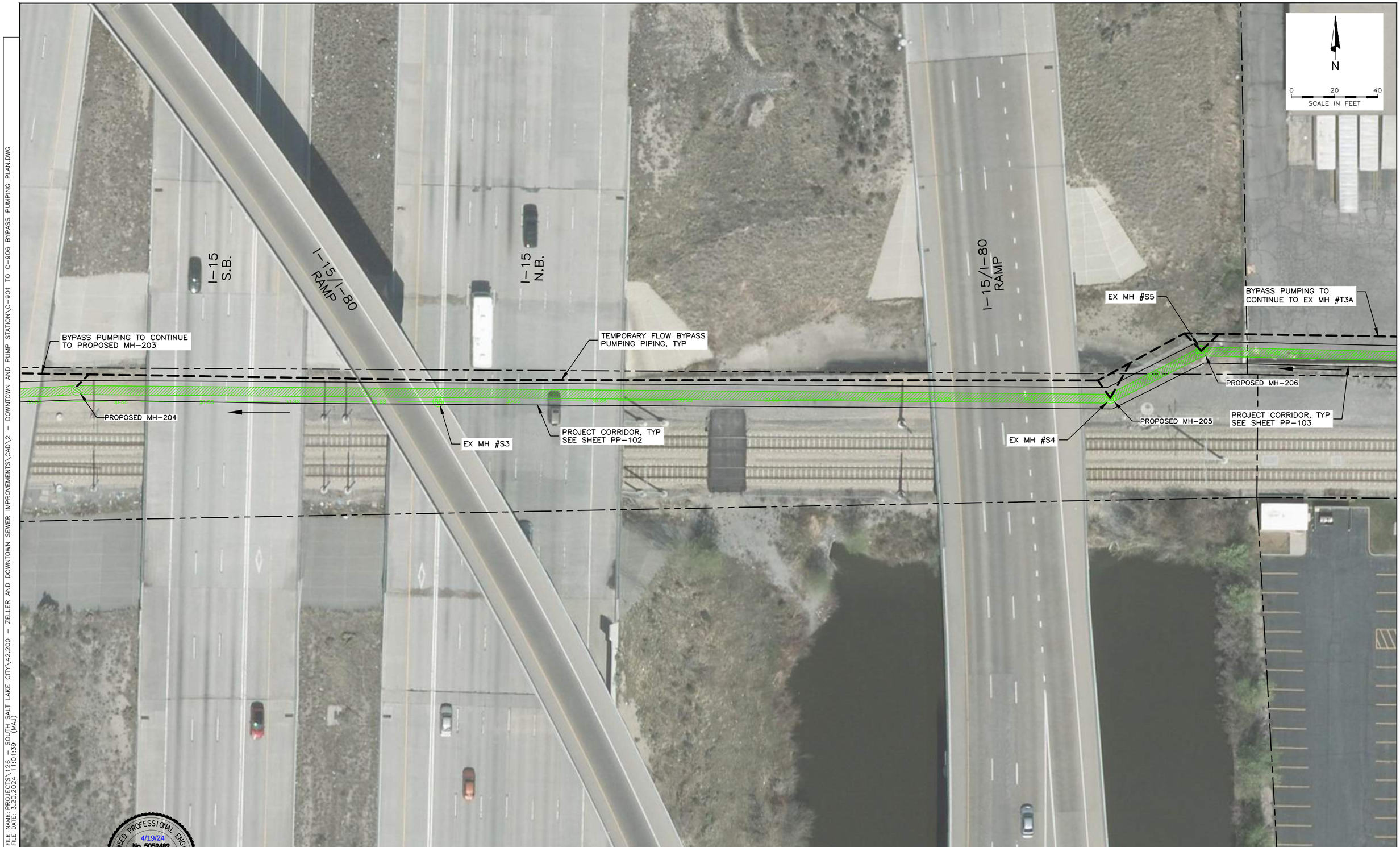


FILE NAME: PROJECTS\126 - SOUTH SALT LAKE CITY\42.200 - ZELLER AND DOWNTOWN SEWER IMPROVEMENTS\CAD\2 - DOWNTOWN AND PUMP STATION\C-901 TO C-906 BYPASS PUMPING PLAN.DWG
FILE DATE: 3.20.2024 11:01:39 (MAJ)

LICENSED PROFESSIONAL ENGINEER
4/19/24
No. 5052482
GREGORY S. THOMAS
STATE OF UTAH
REGISTERED ENGINEER

HANSEN ALLEN & LUCE inc ENGINEERS

| | | | | | |
|---|---|---|---|---|---|
| DESIGNED | ACS | 3 | | | |
| DRAFTED | SWM | 2 | | | |
| CHECKED | GST | 1 | | | |
| DATE | APRIL 2024 | NO. | DATE | REVISIONS | BY APVD. |

SCALE: AS SHOWN

SOUTH SALT LAKE

DOWNTOWN SEWER IMPROVEMENTS AND PUMP STATION
CIVIL
BYPASS PUMPING PLAN

SHEET C-902
126.42.300

7/04




FILE NAME: PROJECTS\126 - SOUTH SALT LAKE CITY\42.200 - ZELLER AND DOWNTOWN SEWER IMPROVEMENTS\CAD\2 - DOWNTOWN AND PUMP STATION\C-901 TO C-906 BYPASS PUMPING PLAN.DWG
FILE DATE: 5.20.2024, 11:01:39 (MAJ)

LICENSED PROFESSIONAL ENGINEER
4/19/24
No. 5052482
GREGORY S. THOMAS
STATE OF UTAH

HANSEN ALLEN & LUCE Inc ENGINEERS

| | | | | | | | |
|---|---|---|---|---|---|---|---|
| DESIGNED | ACS | 3 | | | | | |
| DRAFTED | SWM | 2 | | | | | |
| CHECKED | GST | 1 | | | | | |
| DATE | APRIL 2024 | NO. | DATE | REVISIONS | | BY | APVD. |

SCALE: AS SHOWN

SOUTH SALT LAKE

DOWNTOWN SEWER IMPROVEMENTS AND PUMP STATION
CIVIL
BYPASS PUMPING PLAN

SHEET C-903

126.42.300

7/04

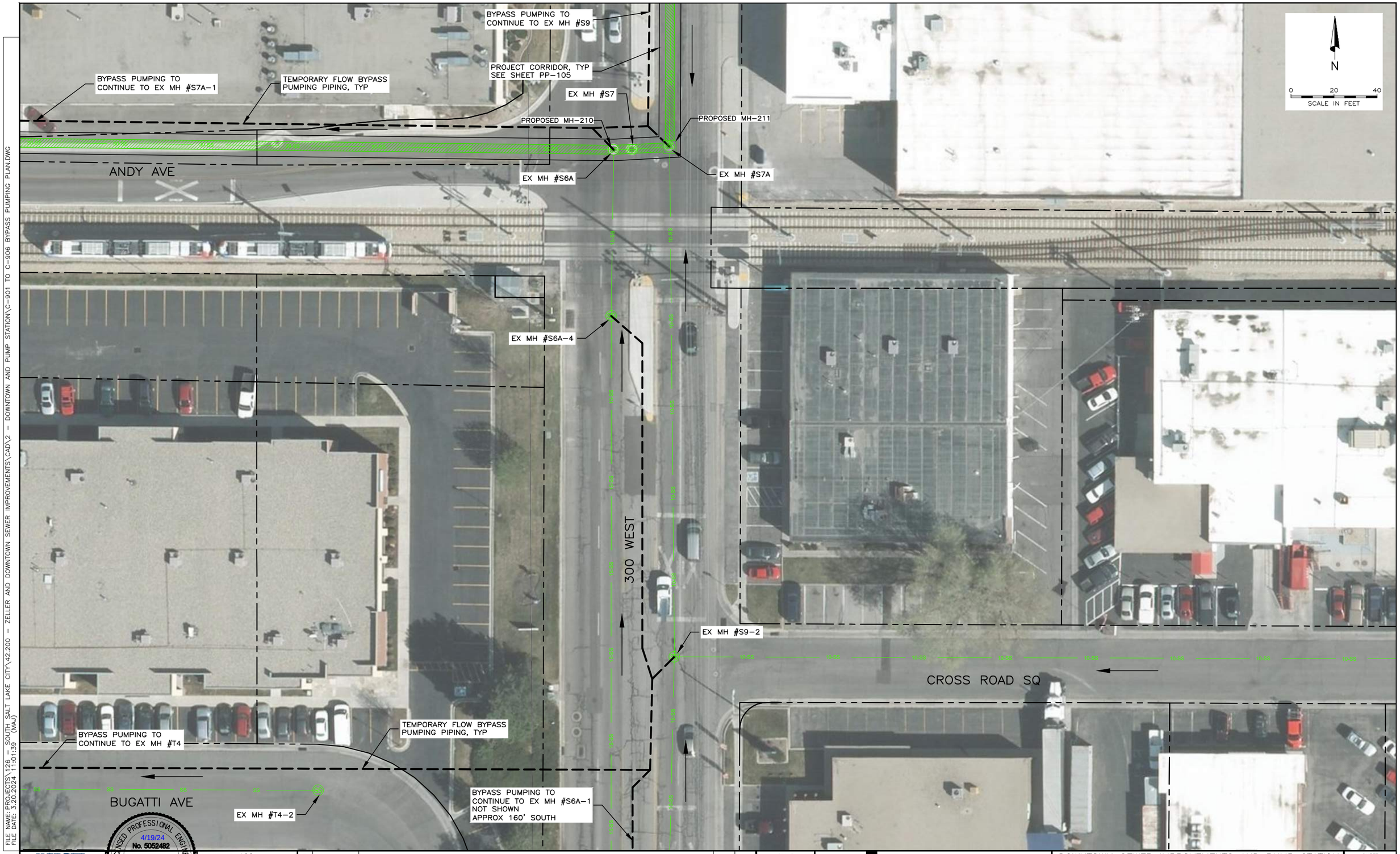


FILE NAME: PROJECTS\126 - SOUTH SALT LAKE CITY\42.200 - ZELLER AND DOWNTOWN SEWER IMPROVEMENTS\CAD\2 - DOWN
FILE DATE: 3.20.2024 11:01:39 (MAJ)

LICENSED PROFESSIONAL ENGINEER
4/19/24
No. 5052482
GREGORY S. THOMAS
STATE OF UTAH

HANSEN ALLEN & LUCE inc
ENGINEERS

| | | | | | | |
|---|---|---|---|---|---|---|
| DESIGNED | ACS | 3 | | | | |
| DRAFTED | SWM | 2 | | | | |
| CHECKED | GST | 1 | | | | |
| DATE | APRIL 2024 | NO. | DATE | REVISIONS | BY | APVD. |

SCALE: AS SHOWN

SOUTH SALT LAKE

DOWNTOWN SEWER IMPROVEMENTS AND PUMP STATION
CIVIL
BYPASS PUMPING PLAN

SHEET C-904

126.42.300

7/04

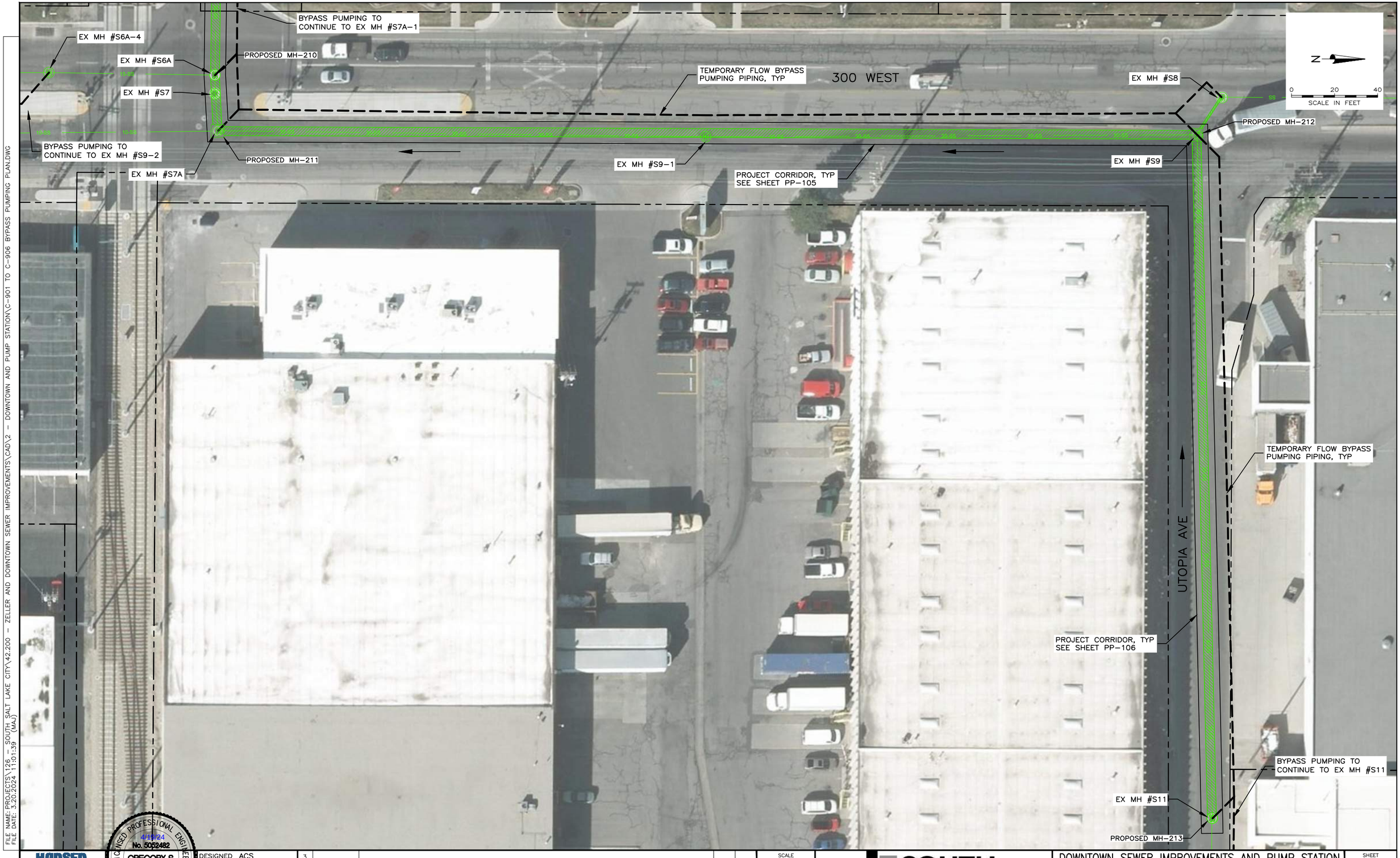


FILE NAME: PROJECTS\126 - SOUTH SALT LAKE CITY\42.200 - ZELLER AND DOWNTOWN SEWER IMPROVEMENTS\CAD\2 - DOWNTOWN AND PUMP STATION\C-901 TO C-906 BYPASS PUMPING PLAN.DWG
FILE DATE: 3.20.2024 11:01:39 (MAJ)

HANSEN ALLEN & LUCE Inc ENGINEERS

LICENSED PROFESSIONAL ENGINEER
4/19/24
No. 5052482
GREGORY S. THOMAS
STATE OF UTAH

| | | | | | | |
|---|---|---|---|---|---|---|
| DESIGNED | ACS | 3 | | | | |
| DRAFTED | SWM | 2 | | | | |
| CHECKED | GST | 1 | | | | |
| DATE | APRIL 2024 | NO. | DATE | REVISIONS | BY | APVD. |

SCALE: AS SHOWN

SOUTH SALT LAKE

DOWNTOWN SEWER IMPROVEMENTS AND PUMP STATION
CIVIL
BYPASS PUMPING PLAN

SHEET C-905

126.42.300

7/04




FILE NAME: PROJECTS\126 - SOUTH SALT LAKE CITY\42.200 - ZELLER AND DOWNTOWN SEWER IMPROVEMENTS\CAD\2 - DOWNTOWN AND PUMP STATION\C-901 TO C-906 BYPASS PUMPING PLAN.DWG
FILE DATE: 3.20.2024 11:01:39 (MAJ)

HANSEN ALLEN & LUCE Inc ENGINEERS

LICENSED PROFESSIONAL ENGINEER
4/19/24
No. 5052482
GREGORY S. THOMAS
STATE OF UTAH

| | | | | | | |
|---|---|---|---|---|---|---|
| DESIGNED | ACS | 3 | | | | |
| DRAFTED | SWM | 2 | | | | |
| CHECKED | GST | 1 | | | | |
| DATE | APRIL 2024 | NO. | DATE | REVISIONS | BY | APVD. |

SCALE: AS SHOWN

SOUTH SALT LAKE

DOWNTOWN SEWER IMPROVEMENTS AND PUMP STATION
CIVIL
BYPASS PUMPING PLAN

SHEET C-906

126.42.300

7/04

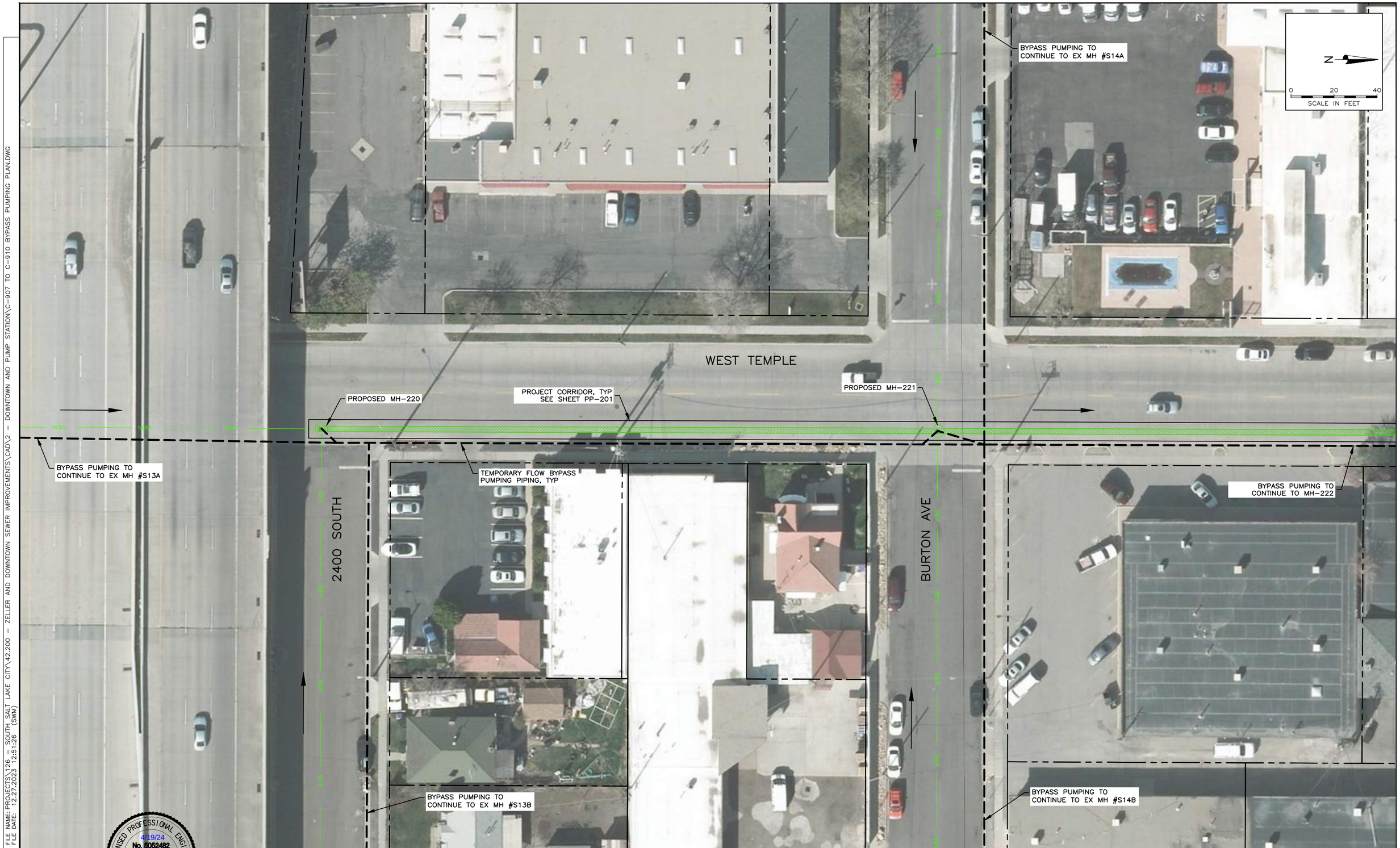


FILE NAME: PROJECTS\126 - SOUTH SALT LAKE CITY\42.200 - ZELLER AND DOWNTOWN SEWER IMPROVEMENTS\CAD\2 - DOWNTOWN AND PUMP STATION\C-907 TO C-910 BYPASS PUMPING PLAN.DWG
FILE DATE: 12.27.2023 12:51:26 (SWN)

7/04

HANSEN ALLEN & LUCE inc
ENGINEERS

LICENSED PROFESSIONAL ENGINEER
4/19/24
No. 5052482
GREGORY S. [illegible]
STATE OF UTAH
REGISTERED ENGINEER

| | | | | | | |
|---|---|---|---|---|---|---|
| DESIGNED | ACS | 3 | | | | |
| DRAFTED | TMT | 2 | | | | |
| CHECKED | GST | 1 | | | | |
| DATE | APRIL 2024 | NO. | DATE | REVISIONS | BY | APVD. |

SCALE
AS SHOWN

SOUTH SALT LAKE

DOWNTOWN SEWER IMPROVEMENTS AND PUMP STATION
CIVIL
BYPASS PUMPING PLAN

SHEET
C-907
126.42.300




FILE NAME: PROJECTS\126 - SOUTH SALT LAKE CITY\42.200 - ZELLER AND DOWNTOWN SEWER IMPROVEMENTS\CAD\2 - DOWNTOWN AND PUMP STATION\C-907 TO C-910 BYPASS PUMPING PLAN.DWG
FILE DATE: 12.27.2023 12:51:26 (SWM)

LICENSED PROFESSIONAL ENGINEER
4/19/24
No. 5052482
GREGORY S. THOMAS
STATE OF UTAH

HANSEN ALLEN & LUCE inc ENGINEERS

| | | | | | | |
|---|---|---|---|---|---|---|
| DESIGNED ACS | 3 | | | | | |
| DRAFTED TMT | 2 | | | | | |
| CHECKED GST | 1 | | | | | |
| DATE APRIL 2024 | NO. | DATE | REVISIONS | BY | APVD. | |

SCALE AS SHOWN

SOUTH SALT LAKE

DOWNTOWN SEWER IMPROVEMENTS AND PUMP STATION
CIVIL
BYPASS PUMPING PLAN

SHEET C-908
126.42.300

7/04

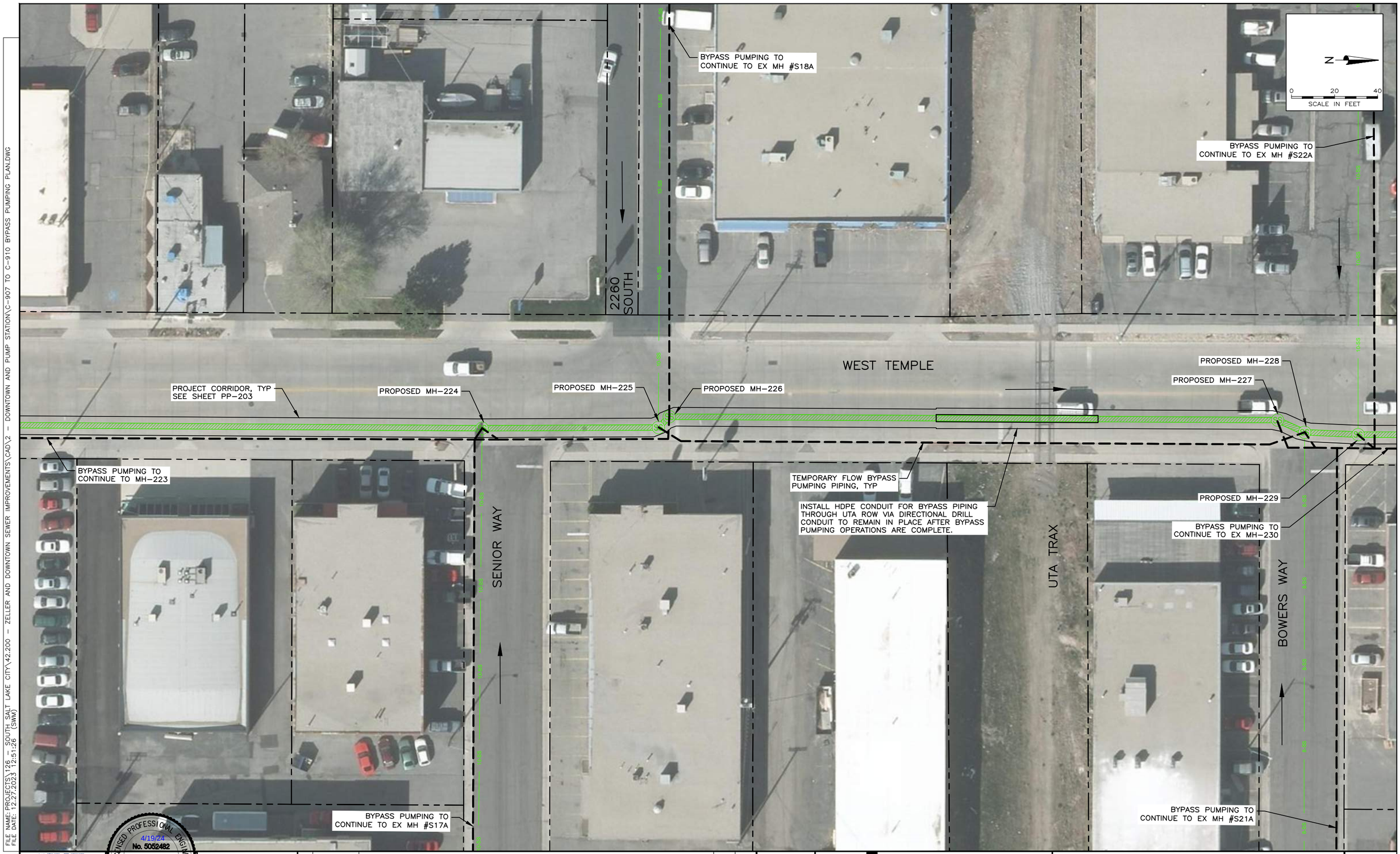


FILE NAME: PROJECTS\126 - SOUTH SALT LAKE CITY\42.200 - ZELLER AND DOWNTOWN SEWER IMPROVEMENTS\CAD\2 - DOWNTOWN AND PUMP STATION\C-907 TO C-910 BYPASS PUMPING PLAN.DWG
FILE DATE: 12.27.2023 12:51:26 (SWM)

HANSEN ALLEN & LUCE inc ENGINEERS

LICENSED PROFESSIONAL ENGINEER 4/19/24 No. 5052482 GREGORY S. THOMAS STATE OF UTAH

| | | | | | | |
|---|---|---|---|---|---|---|
| DESIGNED ACS | 3 | | | | | |
| DRAFTED TMT | 2 | | | | | |
| CHECKED GST | 1 | | | | | |
| DATE APRIL 2024 | NO. | DATE | REVISIONS | BY | APVD. | |

SCALE AS SHOWN

SOUTH SALT LAKE

DOWNTOWN SEWER IMPROVEMENTS AND PUMP STATION
CIVIL
BYPASS PUMPING PLAN

SHEET C-909
126.42.300

7/04




FILE NAME: PROJECTS\126 - SOUTH SALT LAKE CITY\42.200 - ZELLER AND DOWNTOWN SEWER IMPROVEMENTS\CAD\2 - DOWNTOWN AND PUMP STATION\C-907 TO C-910 BYPASS PUMPING PLAN.DWG
FILE DATE: 12.27.2023 12:51:26 (SWM)

HANSEN ALLEN & LUCE inc ENGINEERS

LICENSED PROFESSIONAL ENGINEER 4/19/24 No. 5052482 GREGORY S. THOMAS STATE OF UTAH

| | | | | | | |
|---|---|---|---|---|---|---|
| DESIGNED ACS | 3 | | | | | |
| DRAFTED TMT | 2 | | | | | |
| CHECKED GST | 1 | | | | | |
| DATE APRIL 2024 | NO. | DATE | REVISIONS | BY | APVD. | |

SCALE AS SHOWN

SOUTH SALT LAKE

DOWNTOWN SEWER IMPROVEMENTS AND PUMP STATION
CIVIL
BYPASS PUMPING PLAN

SHEET C-910
126.42.300

7/04

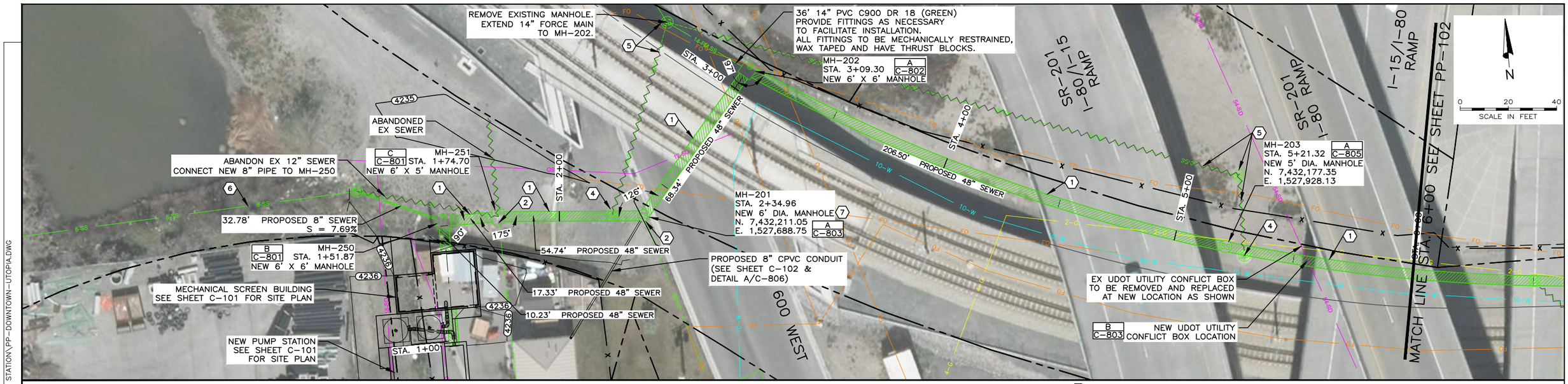


## NOTES:

1. CONTRACTOR SHALL PROTECT IN PLACE AND MAINTAIN IN SERVICE ALL EXISTING UTILITIES. REFER TO GENERAL NOTE 4 ON SHEET G-005.
2. REFER TO NOTE 1 ON SHEET G-102 FOR SUE LEVEL DEFINITIONS.
3. CONTRACTOR SHALL FIELD VERIFY MANHOLE RIM ELEVATIONS PRIOR TO FABRICATION OF MANHOLES.
4. PIPE INVERT ELEVATIONS ARE AT INSIDE EDGE OF MANHOLE.
5. PIPE LENGTHS ARE FROM INSIDE EDGE OF MANHOLE TO INSIDE EDGE OF MANHOLE.
6. TRENCH PER DETAIL A ON DRAWING SHEET C-804.
7. CURB & GUTTER RESTORATION PER DETAIL A ON SHEET C-701. CURB & GUTTER REMOVAL AND REPLACEMENT SHALL BE FROM EXPANSION/CONTRACTION JOINT TO EXPANSION/CONTRACTION JOINT.
8. CURVED SEWER ALIGNMENT BETWEEN MH-202 AND MH-204 TO BE FIELD SURVEYED PRIOR TO BACKFILLING. SURVEY POINTS ALONG INSTALLED ALIGNMENT AT INTERVALS OF 50-FEET. CONTACT TIM NEWELL, HANSEN, ALLEN & LUCE FOR SURVEY VERIFICATION. 48-HOURS ADVANCED NOTICE REQUIRED.

## #KEYED NOTES:

1. REMOVE EXISTING SANITARY SEWER AND MANHOLES AND INSTALL PROPOSED.
2. RECONNECT EXISTING SANITARY SEWER. FIELD VERIFY LOCATION AND ELEVATION PRIOR TO CONSTRUCTION.
4. REMOVE EXISTING MANHOLE.
5. ABANDON EXISTING MANHOLE AND 30" PIPELINE.
6. CONTRACTOR TO FIELD VERIFY PIPE DIAMETER PRIOR TO CONSTRUCTION OF DOWNSTREAM SANITARY SEWER. CONTACT ENGINEER IF OTHER THAN 8-INCH NOMINAL.
7. ORIENT VERTICAL SIDE OF CONE ON MH-201 TOWARDS 8" CPVC CONDUIT TO ALLOW CONDUIT TO PENETRATE THE MANHOLE CONE THROUGH A VERTICAL WALL.

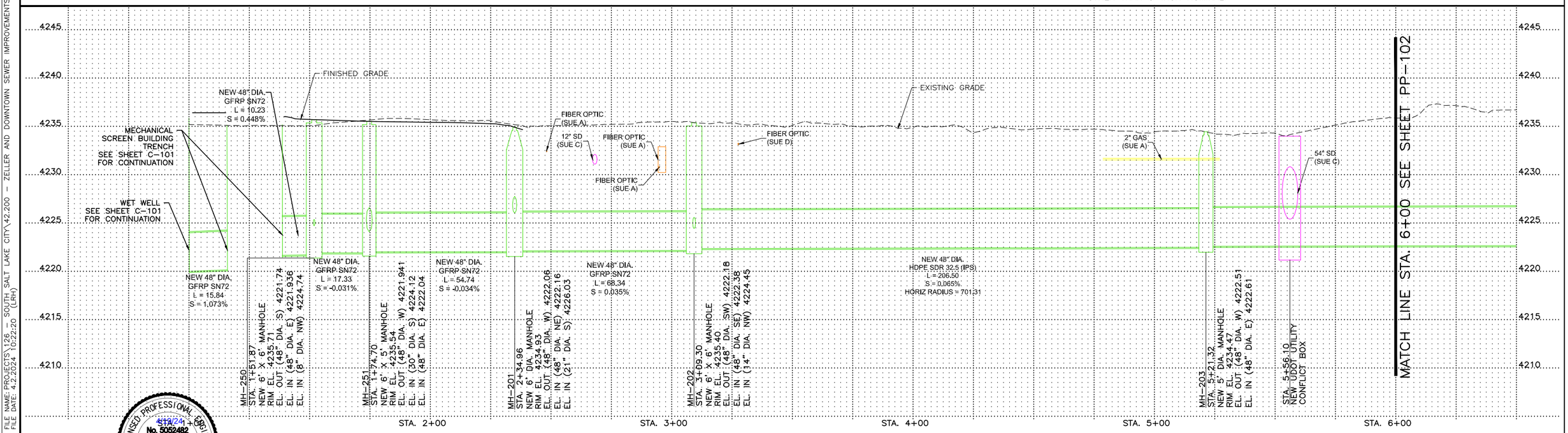


LICENSED PROFESSIONAL ENGINEER
No. 5052482
GREGORY S. THOMAS
STATE OF UTAH
4/4/24

| | | | | | | | |
|---|---|---|---|---|---|---|---|
| HANSEN ALLEN & LUCE inc ENGINEERS | DESIGNED TPB | 3 | | | | | SCALE AS SHOWN |
| | DRAFTED TPB | 2 | | | | | SOUTH SALT LAKE |
| | CHECKED GST | 1 | | | | | DOWNTOWN SEWER IMPROVEMENTS AND PUMP STATION<br>PLAN & PROFILE<br>STA. 1+00 TO STA. 6+00 |
| | DATE APRIL 2024 | NO. | DATE | REVISIONS | BY | APVD. | SHEET PP-101<br>126.42.300 |

FILE NAME: PROJECTS\126 - SOUTH SALT LAKE CITY\42.200 - ZELLER AND DOWNTOWN SEWER IMPROVEMENTS\CAD\2 - DOWNTOWN AND PUMP STATION\PP-DOWNTOWN-UTOPIA.DWG
FILE DATE: 4.2.2024 10:22:20 (LRH)
7/04

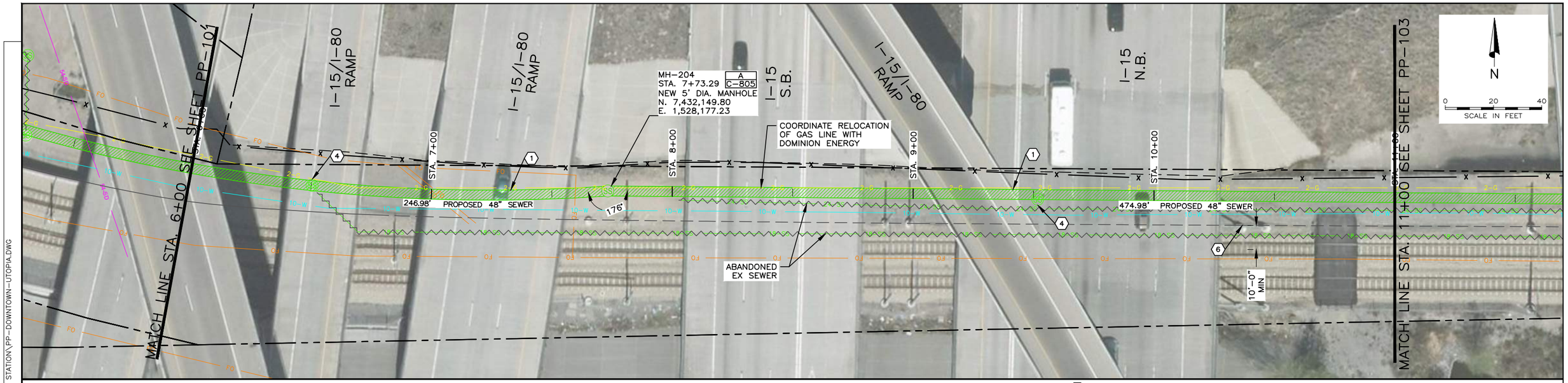


## NOTES:

1. CONTRACTOR SHALL PROTECT IN PLACE AND MAINTAIN IN SERVICE ALL EXISTING UTILITIES. REFER TO GENERAL NOTE 4 ON SHEET G-005.
2. REFER TO GENERAL NOTE 1 ON SHEET G-102 FOR SUE LEVEL DEFINITIONS.
3. CONTRACTOR SHALL FIELD VERIFY MANHOLE RIM ELEVATIONS PRIOR TO FABRICATION OF MANHOLES.
4. PIPE INVERT ELEVATIONS ARE AT INSIDE EDGE OF MANHOLE.
5. PIPE LENGTHS ARE FROM INSIDE EDGE OF MANHOLE TO INSIDE EDGE OF MANHOLE.
6. TRENCH PER DETAIL A ON DRAWING SHEET C-804.
7. CURVED SEWER ALIGNMENT BETWEEN MH-202 AND MH-204 TO BE FIELD SURVEYED PRIOR TO BACKFILLING. SURVEY POINTS ALONG INSTALLED ALIGNMENT AT INTERVALS OF 50-FEET. CONTACT TIM NEWELL, HANSEN, ALLEN & LUCE FOR SURVEY VERIFICATION. 48-HOURS ADVANCED NOTIFICATION REQUIRED.

## #KEYED NOTES:

(1) REMOVE EXISTING SANITARY SEWER AND MANHOLES AND INSTALL PROPOSED.

(4) REMOVE EXISTING MANHOLE.

(6) INSTALL TEMPORARY CONSTRUCTION FENCE (SNOW FENCE) 10' OFF TRAX CENTERLINE. CONTRACTOR PERSONNEL SHALL NOT CROSS TEMPORARY CONSTRUCTION FENCE WITHOUT UTA PERSONNEL ON SITE.

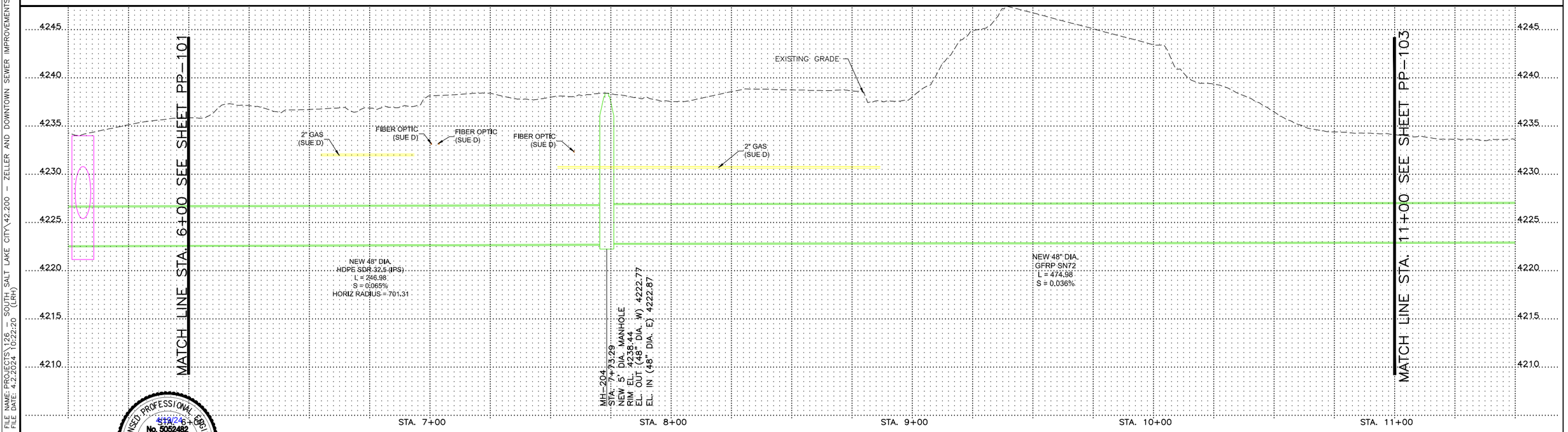


LICENSED PROFESSIONAL ENGINEER
No. 5052482
GREGORY S. THOMAS
STATE OF UTAH
4/4/24

HANSEN ALLEN & LUCE Inc ENGINEERS

| | | | | | |
|---|---|---|---|---|---|
| DESIGNED | TPB | 3 | | | |
| DRAFTED | TPB | 2 | | | |
| CHECKED | GST | 1 | | | |
| DATE | APRIL 2024 | NO. | DATE | REVISIONS | BY APVD. |

SCALE: AS SHOWN

SOUTH SALT LAKE

DOWNTOWN SEWER IMPROVEMENTS AND PUMP STATION
PLAN & PROFILE
STA. 6+00 TO STA. 11+00

SHEET PP-102
126.42.300

FILE NAME: PROJECTS\126 - SOUTH SALT LAKE CITY\42.200 - ZELLER AND DOWNTOWN SEWER IMPROVEMENTS\CAD\2 - DOWNTOWN AND PUMP STATION\PP-DOWNTOWN-UTOPIA.DWG
FILE DATE: 4.2.2024 10:22:20 (LRH)

7/04

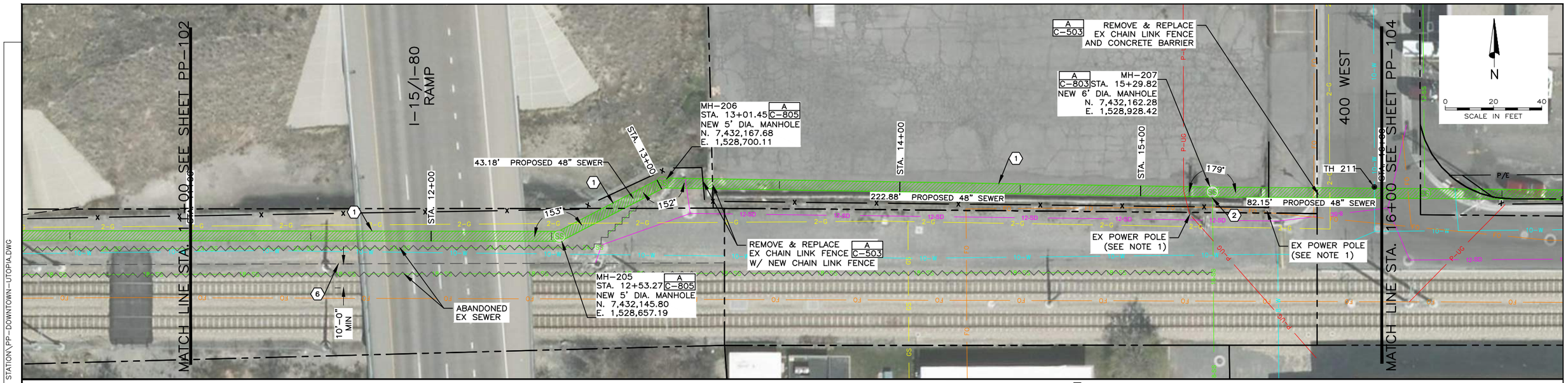


## NOTES:

1. CONTRACTOR SHALL PROTECT IN PLACE AND MAINTAIN IN SERVICE ALL EXISTING UTILITIES. REFER TO GENERAL NOTE 4 ON SHEET G-005.
2. REFER TO GENERAL NOTE 1 ON SHEET G-102 FOR SUE LEVEL DEFINITIONS.
3. CONTRACTOR SHALL FIELD VERIFY MANHOLE RIM ELEVATIONS PRIOR TO FABRICATION OF MANHOLES.
4. PIPE INVERT ELEVATIONS ARE AT INSIDE EDGE OF MANHOLE.
5. PIPE LENGTHS ARE FROM INSIDE EDGE OF MANHOLE TO INSIDE EDGE OF MANHOLE.
6. TRENCH PER DETAIL A ON DRAWING SHEET C-804.
7. ASPHALT PAVEMENT T-PATCH RESTORATION PER APWA PLAN 255. 2-FOOT WIDE MILL AND OVERLAY BEYOND TRENCH T-PATCH SHALL BE REQUIRED.
8. CURB & GUTTER RESTORATION PER DETAIL A ON SHEET C-701. CURB & GUTTER REMOVAL AND REPLACEMENT SHALL BE FROM EXPANSION/CONTRACTION JOINT TO EXPANSION/CONTRACTION JOINT.

## #KEYED NOTES:

1. REMOVE EXISTING SANITARY SEWER AND MANHOLES AND INSTALL PROPOSED.
2. RECONNECT EXISTING SANITARY SEWER. FIELD VERIFY LOCATION AND ELEVATION PRIOR TO CONSTRUCTION.
6. INSTALL TEMPORARY CONSTRUCTION FENCE (SNOW FENCE) 10' OFF TRAX CENTERLINE. CONTRACTOR PERSONNEL SHALL NOT CROSS TEMPORARY CONSTRUCTION FENCE WITHOUT UTA PERSONNEL ON SITE.

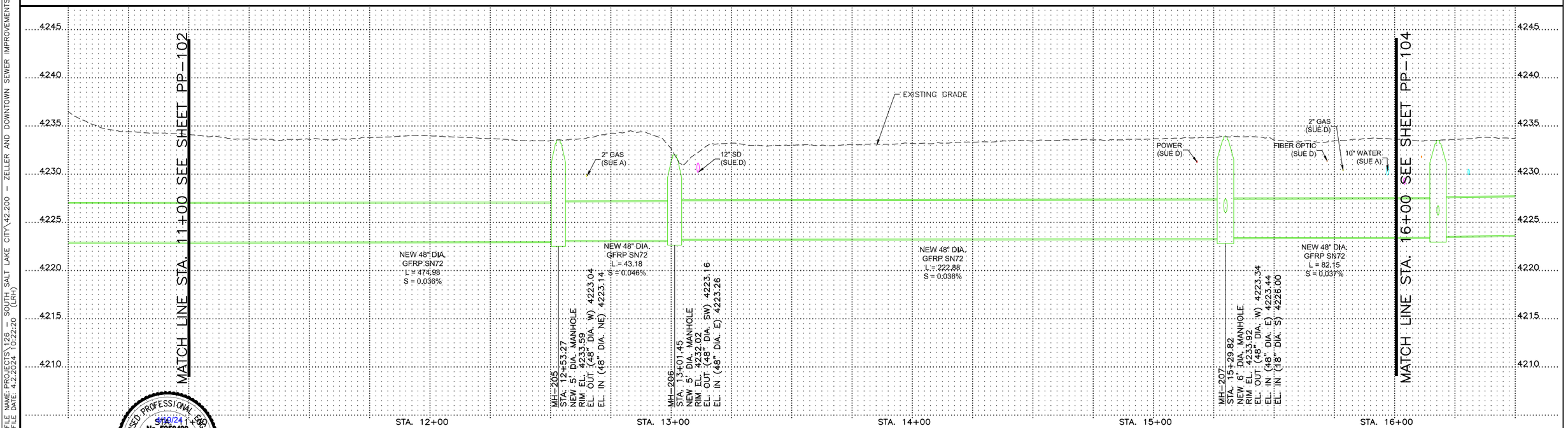


LICENSED PROFESSIONAL ENGINEER
5/10/24
No. 5052482
GREGORY S. THOMAS
REGISTERED PROFESSIONAL ENGINEER

HANSEN ALLEN & LUCE Inc ENGINEERS

| | | | | | | |
|---|---|---|---|---|---|---|
| DESIGNED | TPB | 3 | | | | |
| DRAFTED | TPB | 2 | | | | |
| CHECKED | GST | 1 | | | | |
| DATE | APRIL 2024 | NO. | DATE | REVISIONS | BY | APVD. |

SCALE: AS SHOWN

SOUTH SALT LAKE

DOWNTOWN SEWER IMPROVEMENTS AND PUMP STATION
PLAN & PROFILE
STA. 11+00 TO STA. 16+00

SHEET PP-103
126.42.300

FILE NAME: PROJECTS\126 - SOUTH SALT LAKE CITY\42.200 - ZELLER AND DOWNTOWN SEWER IMPROVEMENTS\CAD\2 - DOWNTOWN AND PUMP STATION\PP-DOWNTOWN-UTOPIA.DWG
FILE DATE: 4.2.2024 10:22:20 (LRH)

7/04

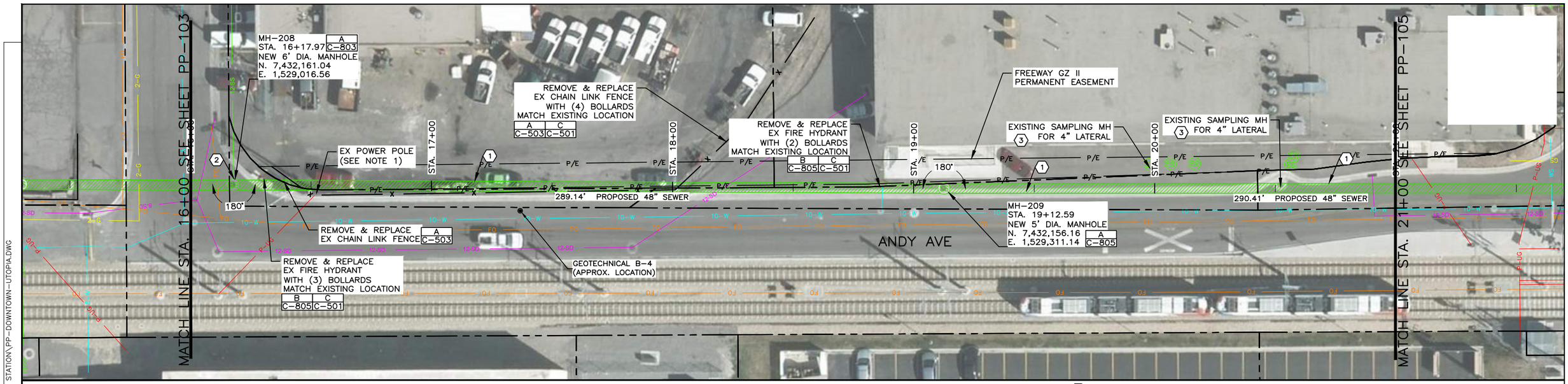


## NOTES:

1. CONTRACTOR SHALL PROTECT IN PLACE AND MAINTAIN IN SERVICE ALL EXISTING UTILITIES. REFER TO GENERAL NOTE 4 ON SHEET G-005.
2. REFER TO GENERAL NOTE 1 ON SHEET G-102 FOR SUE LEVEL DEFINITIONS.
3. CONTRACTOR SHALL FIELD VERIFY MANHOLE RIM ELEVATIONS PRIOR TO FABRICATION OF MANHOLES.
4. PIPE INVERT ELEVATIONS ARE AT INSIDE EDGE OF MANHOLE.
5. PIPE LENGTHS ARE FROM INSIDE EDGE OF MANHOLE TO INSIDE EDGE OF MANHOLE.
6. TRENCH PER DETAIL A ON DRAWING SHEET C-804.
7. CURB & GUTTER RESTORATION PER DETAIL A ON SHEET C-701. CURB & GUTTER REMOVAL AND REPLACEMENT SHALL BE FROM EXPANSION/CONTRACTION JOINT TO EXPANSION/CONTRACTION JOINT.
8. WATERWAY RESTORATION PER DETAIL B ON SHEET C-701.

## #KEYED NOTES:

1. REMOVE EXISTING SANITARY SEWER AND MANHOLES AND INSTALL PROPOSED.
2. RECONNECT EXISTING SANITARY SEWER. FIELD VERIFY LOCATION AND ELEVATION PRIOR TO CONSTRUCTION.
3. RECONNECT EXISTING 4" LATERAL TO NEW MAIN PER DETAIL B ON DRAWING SHEET C-804.

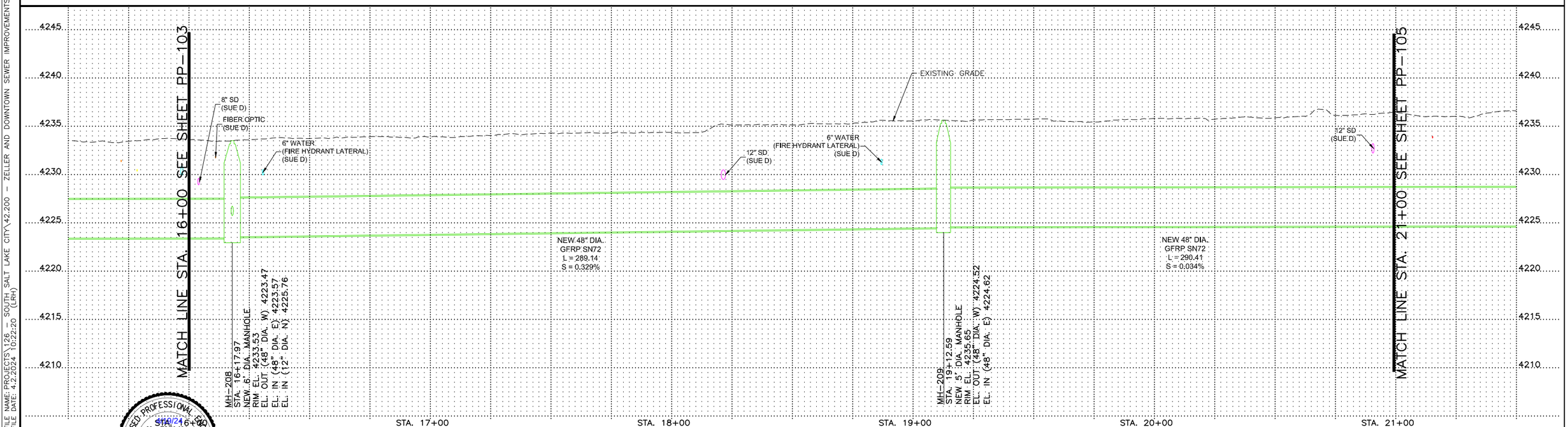


LICENSED PROFESSIONAL ENGINEER
GREGORY S. THOMAS
No. 5052482
STATE OF UTAH
5/10/24

| | | | | | | | |
|---|---|---|---|---|---|---|---|
| DESIGNED | TPB | 3 | | | | | |
| DRAFTED | TPB | 2 | | | | | |
| CHECKED | GST | 1 | | | | | |
| DATE | APRIL 2024 | NO. | DATE | REVISIONS | | BY | APVD. |

HANSEN ALLEN & LUCE Inc ENGINEERS

SCALE: AS SHOWN

SOUTH SALT LAKE

DOWNTOWN SEWER IMPROVEMENTS AND PUMP STATION
PLAN & PROFILE
STA. 16+00 TO STA. 21+00

SHEET PP-104
126.42.300

FILE NAME: PROJECTS\126 - SOUTH SALT LAKE CITY\42.200 - ZELLER AND DOWNTOWN SEWER IMPROVEMENTS\CAD\2 - DOWNTOWN AND PUMP STATION\PP-DOWNTOWN-UTOPIA.DWG
FILE DATE: 4.2.2024 10:22:20 (LRH)

7/04

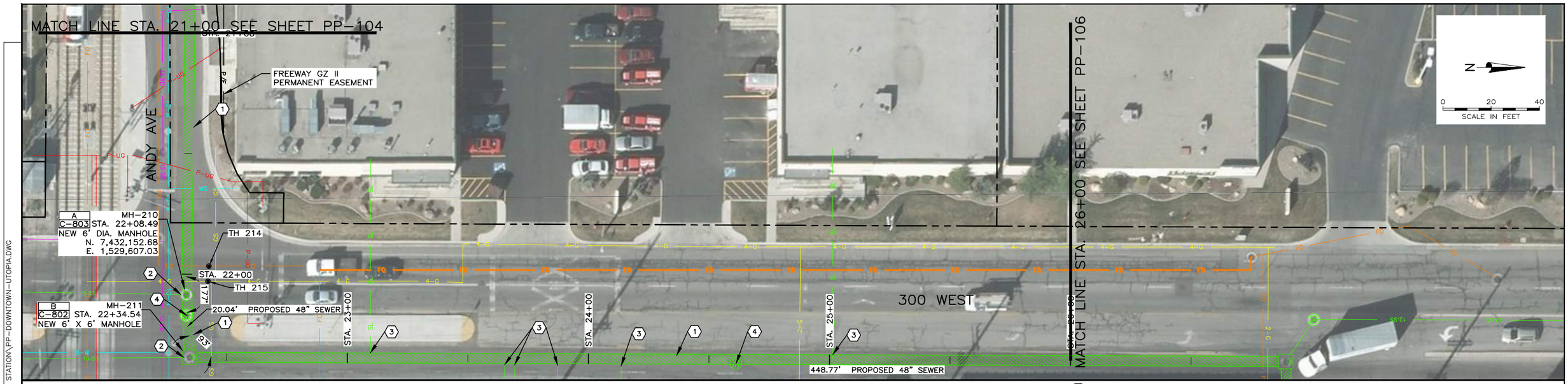


## NOTES:

1. CONTRACTOR SHALL PROTECT IN PLACE AND MAINTAIN IN SERVICE ALL EXISTING UTILITIES. REFER TO GENERAL NOTE 4 ON SHEET G-005.
2. REFER TO GENERAL NOTE 1 ON SHEET G-102 FOR SUE LEVEL DEFINITIONS.
3. CONTRACTOR SHALL FIELD VERIFY MANHOLE RIM ELEVATIONS PRIOR TO FABRICATION OF MANHOLES.
4. PIPE INVERT ELEVATIONS ARE AT INSIDE EDGE OF MANHOLE.
5. PIPE LENGTHS ARE FROM INSIDE EDGE OF MANHOLE TO INSIDE EDGE OF MANHOLE.
6. TRENCH PER DETAIL A ON DRAWING SHEET C-804.

## #KEYED NOTES:

1. REMOVE EXISTING SANITARY SEWER AND MANHOLES AND INSTALL PROPOSED.
2. RECONNECT EXISTING SANITARY SEWER. FIELD VERIFY LOCATION AND ELEVATION PRIOR TO CONSTRUCTION.
3. RECONNECT EXISTING 4" LATERAL TO NEW MAIN PER DETAIL B ON DRAWING SHEET C-804.
4. REMOVE EXISTING MANHOLE.

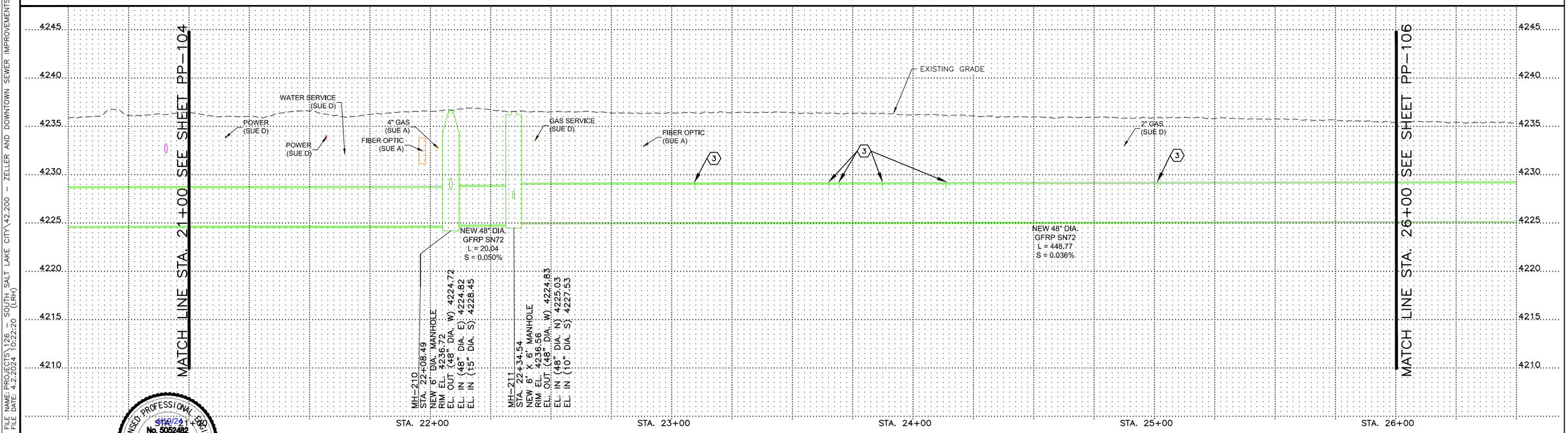


FILE NAME: PROJECTS\126 - SOUTH SALT LAKE CITY\42.200 - ZELLER AND DOWNTOWN SEWER IMPROVEMENTS\CAD\2 - DOWNTOWN AND PUMP STATION\PP-DOWNTOWN-UTOPIA.DWG
FILE DATE: 4.2.2024 10:22:20 (LRH)

HANSEN ALLEN & LUCE INC ENGINEERS

LICENSED PROFESSIONAL ENGINEER No. 5052482 GREGORY S. THOMAS STATE OF UTAH

| | | | | | | |
|---|---|---|---|---|---|---|
| DESIGNED TPB | 3 | | | | | |
| DRAFTED TPB | 2 | | | | | |
| CHECKED GST | 1 | | | | | |
| DATE APRIL 2024 | NO. | DATE | REVISIONS | BY | APVD. | |

SCALE AS SHOWN

SOUTH SALT LAKE

DOWNTOWN SEWER IMPROVEMENTS AND PUMP STATION
PLAN & PROFILE
STA. 21+00 TO STA. 26+00

SHEET PP-105
126.42.300

7/04

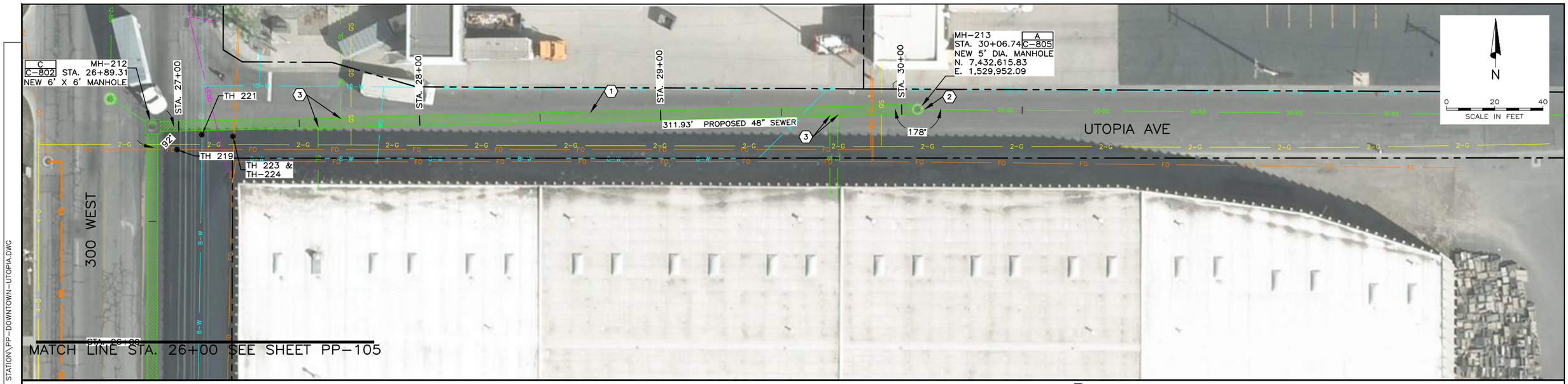


## NOTES:

1. CONTRACTOR SHALL PROTECT IN PLACE AND MAINTAIN IN SERVICE ALL EXISTING UTILITIES. REFER TO GENERAL NOTE 4 ON SHEET G-005.
2. REFER TO GENERAL NOTE 1 ON SHEET G-102 FOR SUE LEVEL DEFINITIONS.
3. CONTRACTOR SHALL FIELD VERIFY MANHOLE RIM ELEVATIONS PRIOR TO FABRICATION OF MANHOLES.
4. PIPE INVERT ELEVATIONS ARE AT INSIDE EDGE OF MANHOLE.
5. PIPE LENGTHS ARE FROM INSIDE EDGE OF MANHOLE TO INSIDE EDGE OF MANHOLE.
6. TRENCH PER DETAIL A ON DRAWING SHEET C-804.

## #KEYED NOTES:

1. REMOVE EXISTING SANITARY SEWER AND MANHOLES AND INSTALL PROPOSED.
2. RECONNECT EXISTING SANITARY SEWER. FIELD VERIFY LOCATION AND ELEVATION PRIOR TO CONSTRUCTION.
3. RECONNECT EXISTING 4" LATERAL TO NEW MAIN PER DETAIL B ON DRAWING SHEET C-804.

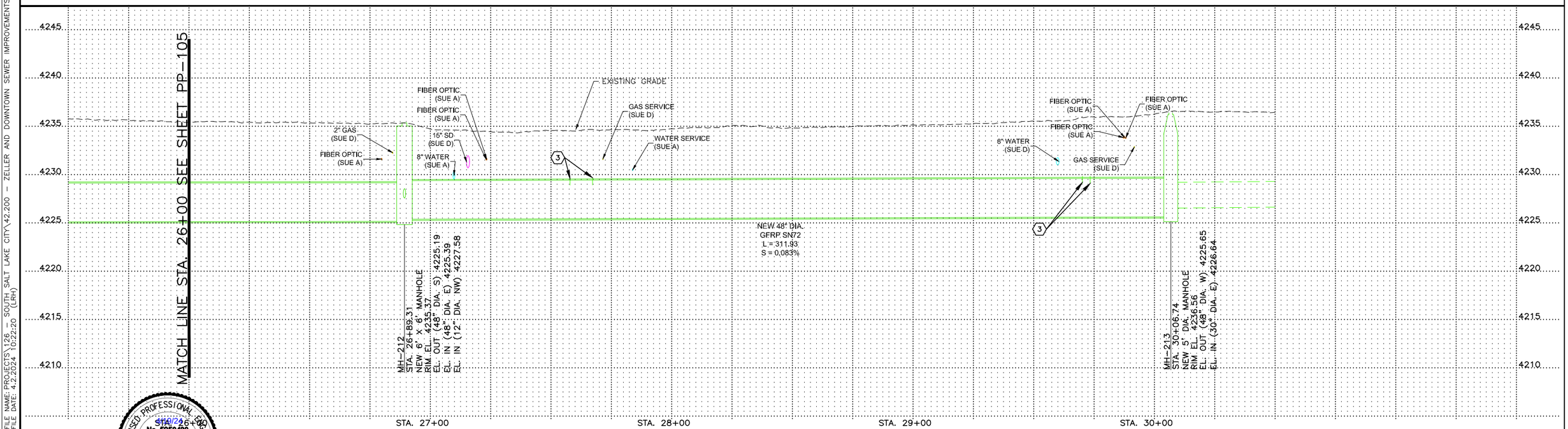


LICENSED PROFESSIONAL ENGINEER
No. 5052482
GREGORY S. THORNE
STATE OF UTAH
5/10/24

HANSEN ALLEN & LUCE Inc ENGINEERS

| | | | | | | |
|---|---|---|---|---|---|---|
| DESIGNED | TPB | 3 | | | | |
| DRAFTED | TPB | 2 | | | | |
| CHECKED | GST | 1 | | | | |
| DATE | APRIL 2024 | NO. | DATE | REVISIONS | BY | APVD. |

SCALE: AS SHOWN

SOUTH SALT LAKE

DOWNTOWN SEWER IMPROVEMENTS AND PUMP STATION
PLAN & PROFILE
STA. 26+00 TO STA. 30+07

SHEET PP-106
126.42.300

FILE NAME: PROJECTS\126 - SOUTH SALT LAKE CITY\42.200 - ZELLER AND DOWNTOWN SEWER IMPROVEMENTS\CAD\2 - DOWNTOWN AND PUMP STATION\PP-DOWNTOWN-UTOPIA.DWG
FILE DATE: 4.2.2024 10:22:20 (LRH)

7/04




## NOTES:

1. CONTRACTOR SHALL PROTECT IN PLACE AND MAINTAIN IN SERVICE ALL EXISTING UTILITIES. REFER TO GENERAL NOTE 4 ON SHEET G-005.
2. REFER TO NOTE 1 ON SHEET G-102 FOR SUE LEVEL DEFINITIONS.
3. CONTRACTOR SHALL FIELD VERIFY MANHOLE RIM ELEVATIONS PRIOR TO FABRICATION OF MANHOLES.
4. PIPE INVERT ELEVATIONS ARE AT INSIDE EDGE OF MANHOLE.
5. PIPE LENGTHS ARE FROM INSIDE EDGE OF MANHOLE TO INSIDE EDGE OF MANHOLE.
6. TRENCH PER DETAIL A/C-804.
7. CONCRETE PAVEMENT RESTORATION PER DETAIL A ON SHEET C-703. FULL PANEL REMOVAL AND REPLACEMENT IS REQUIRED. PARTIAL PANEL REMOVAL AND REPLACEMENT WILL NO BE ALLOWED.

## #KEYED NOTES:

1. REMOVE EXISTING SANITARY SEWER AND MANHOLES AND INSTALL PROPOSED.
2. RECONNECT EXISTING SANITARY SEWER. FIELD VERIFY LOCATION AND ELEVATION PRIOR TO CONSTRUCTION.
3. RECONNECT EXISTING 4" LATERAL TO NEW MAIN PER DETAIL B/C-804.

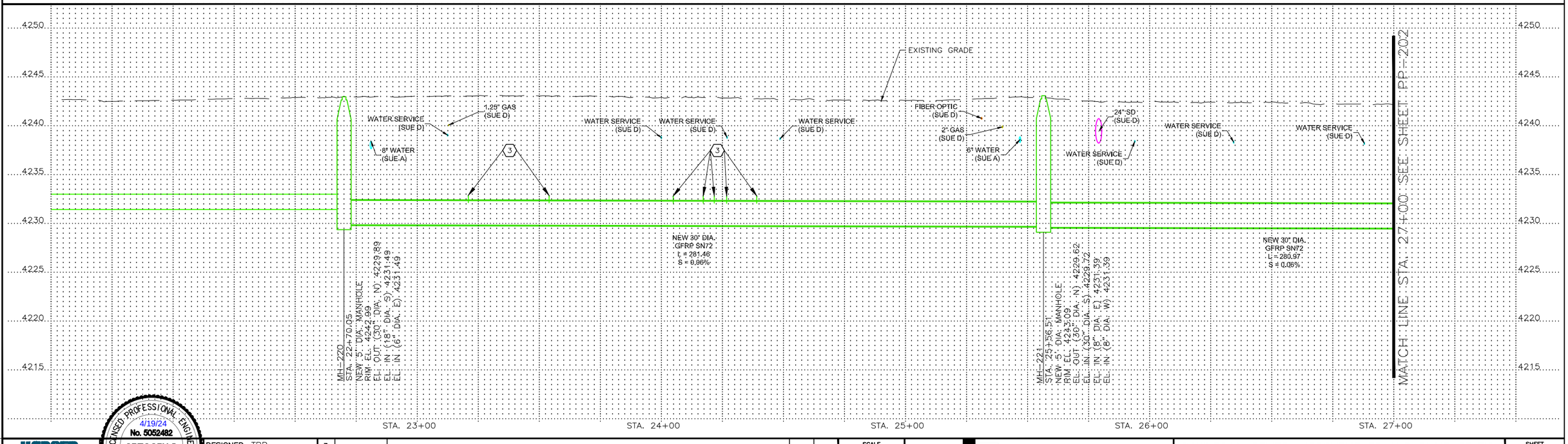


FILE NAME: PROJECTS\126 - SOUTH SALT LAKE CITY\42.200 - ZELLER AND DOWNTOWN SEWER IMPROVEMENTS\CAD\2 - DOWNTOWN AND PUMP STATION\PP-201 TO PP-204 DOWNTOWN-WTEMPLE.DWG
FILE DATE: 12.27.2023 11:12:46 (SWM)

HANSEN ALLEN & LUCE inc ENGINEERS

LICENSED PROFESSIONAL ENGINEER 4/19/24 No. 5052482 GREGORY S. THOMAS

| | | | | | | |
|---|---|---|---|---|---|---|
| DESIGNED TPB | 3 | | | | | |
| DRAFTED TPB | 2 | | | | | |
| CHECKED GST | 1 | | | | | |
| DATE APRIL 2024 | NO. | DATE | REVISIONS | BY | APVD. | |

SCALE AS SHOWN

SOUTH SALT LAKE

DOWNTOWN SEWER IMPROVEMENTS AND PUMP STATION
PLAN & PROFILE - WEST TEMPLE
STA. 22+70 TO STA. 27+00

SHEET PP-201
126.42.300

7/04

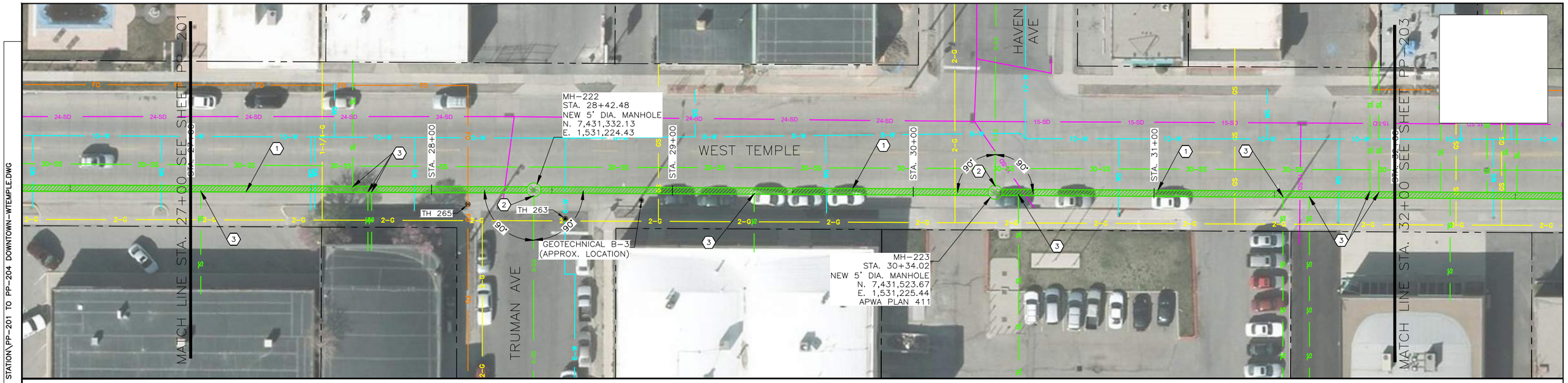


## NOTES:

1. CONTRACTOR SHALL PROTECT IN PLACE AND MAINTAIN IN SERVICE ALL EXISTING UTILITIES. REFER TO GENERAL NOTE 4 ON SHEET G-005.
2. REFER TO NOTE 1 ON SHEET G-102 FOR SUE LEVEL DEFINITIONS.
3. CONTRACTOR SHALL FIELD VERIFY MANHOLE RIM ELEVATIONS PRIOR TO FABRICATION OF MANHOLES.
4. PIPE INVERT ELEVATIONS ARE AT INSIDE EDGE OF MANHOLE.
5. PIPE LENGTHS ARE FROM INSIDE EDGE OF MANHOLE TO INSIDE EDGE OF MANHOLE.
6. TRENCH PER DETAIL A/C-804.
7. CONCRETE PAVEMENT RESTORATION PER DETAIL A ON SHEET C-703. FULL PANEL REMOVAL AND REPLACEMENT IS REQUIRED. PARTIAL PANEL REMOVAL AND REPLACEMENT WILL NO BE ALLOWED.

## #KEYED NOTES:

1. REMOVE EXISTING SANITARY SEWER AND MANHOLES AND INSTALL PROPOSED.
2. RECONNECT EXISTING SANITARY SEWER. FIELD VERIFY LOCATION AND ELEVATION PRIOR TO CONSTRUCTION.
3. RECONNECT EXISTING 4" LATERAL TO NEW MAIN PER DETAIL B/C-804.

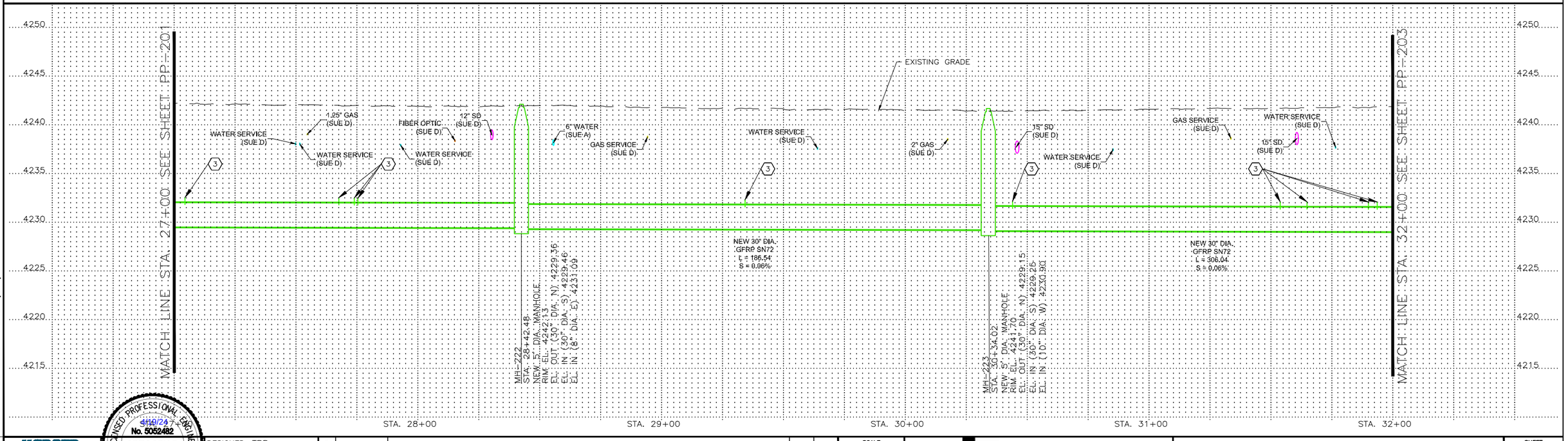


FILE NAME: PROJECTS\126 - SOUTH SALT LAKE CITY\42.200 - ZELLER AND DOWNTOWN SEWER IMPROVEMENTS\CAD\2 - DOWNTOWN AND PUMP STATION\PP-201 TO PP-204 DOWNTOWN-WTEMPLE.DWG
FILE DATE: 12.27.2023 11:12:46 (SWM)

HANSEN ALLEN & LUCE inc ENGINEERS

LICENSED PROFESSIONAL ENGINEER No. 5052482 GREGORY S. THOMAS PROJECT ENGINEER

| | | | | | |
|---|---|---|---|---|---|
| DESIGNED TPB | 3 | | | | |
| DRAFTED TPB | 2 | | | | |
| CHECKED GST | 1 | | | | |
| DATE APRIL 2024 | NO. | DATE | REVISIONS | BY | APVD. |

SCALE AS SHOWN

SOUTH SALT LAKE

DOWNTOWN SEWER IMPROVEMENTS AND PUMP STATION
PLAN & PROFILE - WEST TEMPLE
STA. 27+00 TO STA. 32+00

SHEET PP-202
126.42.300

7/04

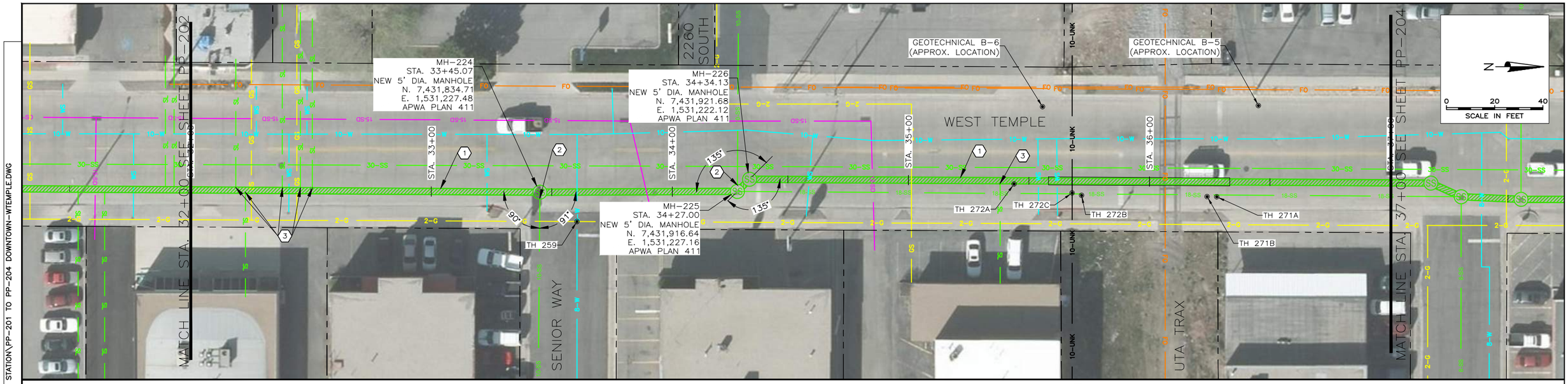


## NOTES:

1. CONTRACTOR SHALL PROTECT IN PLACE AND MAINTAIN IN SERVICE ALL EXISTING UTILITIES. REFER TO GENERAL NOTE 4 ON SHEET G-005.
2. REFER TO NOTE 1 ON SHEET G-102 FOR SUE LEVEL DEFINITIONS.
3. CONTRACTOR SHALL FIELD VERIFY MANHOLE RIM ELEVATIONS PRIOR TO FABRICATION OF MANHOLES.
4. PIPE INVERT ELEVATIONS ARE AT INSIDE EDGE OF MANHOLE.
5. PIPE LENGTHS ARE FROM INSIDE EDGE OF MANHOLE TO INSIDE EDGE OF MANHOLE.
6. TRENCH PER DETAIL A/C-804.
7. CONCRETE PAVEMENT RESTORATION PER DETAIL A ON SHEET C-703. FULL PANEL REMOVAL AND REPLACEMENT IS REQUIRED. PARTIAL PANEL REMOVAL AND REPLACEMENT WILL NO BE ALLOWED.

## #KEYED NOTES:

1. REMOVE EXISTING SANITARY SEWER AND MANHOLES AND INSTALL PROPOSED.
2. RECONNECT EXISTING SANITARY SEWER. FIELD VERIFY LOCATION AND ELEVATION PRIOR TO CONSTRUCTION.
3. RECONNECT EXISTING 4" LATERAL TO NEW MAIN PER DETAIL B/C-804.

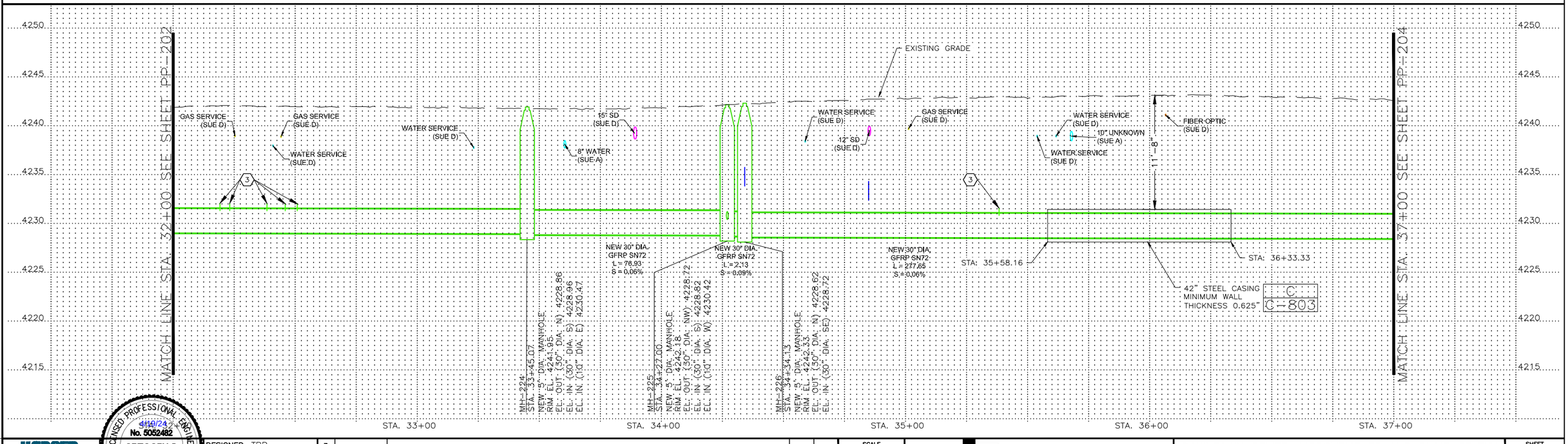


FILE NAME: PROJECTS\126 - SOUTH SALT LAKE CITY\42.200 - ZELLER AND DOWNTOWN SEWER IMPROVEMENTS\CAD\2 - DOWNTOWN AND PUMP STATION\PP-201 TO PP-204 DOWNTOWN-WTEMPLE.DWG
FILE DATE: 12.27.2023 11:12:46 (SWM)

HANSEN ALLEN & LUCE inc ENGINEERS

LICENSED PROFESSIONAL ENGINEER No. 5052482 GREGORY S. THOMAS STATE OF UTAH

| | | | | | | |
|---|---|---|---|---|---|---|
| DESIGNED TPB | 3 | | | | | |
| DRAFTED TPB | 2 | | | | | |
| CHECKED GST | 1 | | | | | |
| DATE APRIL 2024 | NO. | DATE | REVISIONS | BY | APVD. | |

SCALE AS SHOWN

SOUTH SALT LAKE

DOWNTOWN SEWER IMPROVEMENTS AND PUMP STATION
PLAN & PROFILE - WEST TEMPLE
STA. 32+00 TO STA. 37+00

SHEET PP-203
126.42.300

7/04

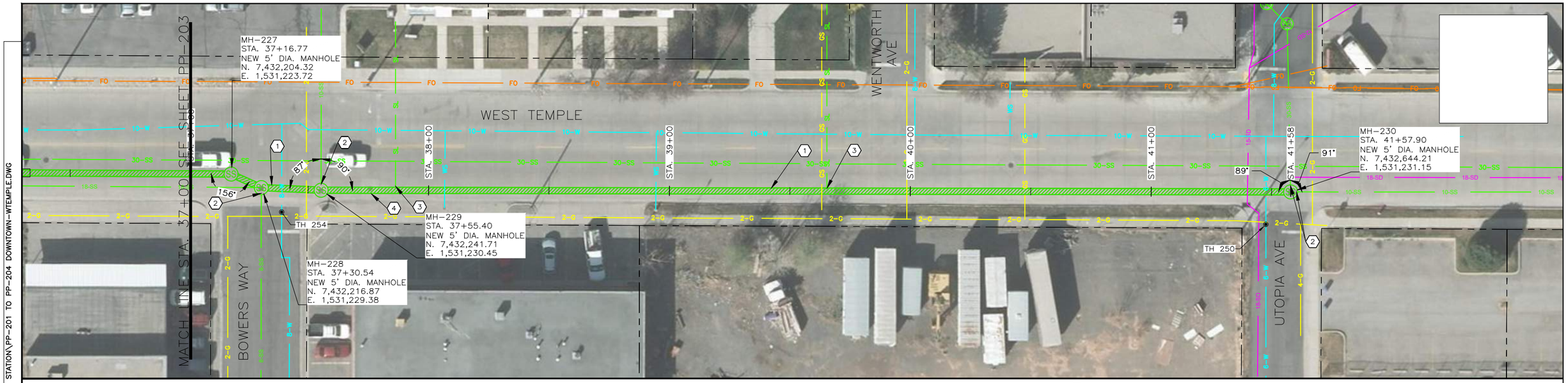


## NOTES:

1. CONTRACTOR SHALL PROTECT IN PLACE AND MAINTAIN IN SERVICE ALL EXISTING UTILITIES. REFER TO GENERAL NOTE 4 ON SHEET G-005.
2. REFER TO NOTE 1 ON SHEET G-102 FOR SUE LEVEL DEFINITIONS.
3. CONTRACTOR SHALL FIELD VERIFY MANHOLE RIM ELEVATIONS PRIOR TO FABRICATION OF MANHOLES.
4. PIPE INVERT ELEVATIONS ARE AT INSIDE EDGE OF MANHOLE.
5. PIPE LENGTHS ARE FROM INSIDE EDGE OF MANHOLE TO INSIDE EDGE OF MANHOLE.
6. TRENCH PER DETAIL A/C-804.
7. CONCRETE PAVEMENT RESTORATION PER DETAIL A ON SHEET C-703. FULL PANEL REMOVAL AND REPLACEMENT IS REQUIRED. PARTIAL PANEL REMOVAL AND REPLACEMENT WILL NO BE ALLOWED.

## #KEYED NOTES:

1. REMOVE EXISTING SANITARY SEWER AND MANHOLES AND INSTALL PROPOSED.
2. RECONNECT EXISTING SANITARY SEWER. FIELD VERIFY LOCATION AND ELEVATION PRIOR TO CONSTRUCTION.
3. RECONNECT EXISTING 4" LATERAL TO NEW MAIN PER DETAIL B/C-804.
4. REMOVE EXISTING MANHOLE.

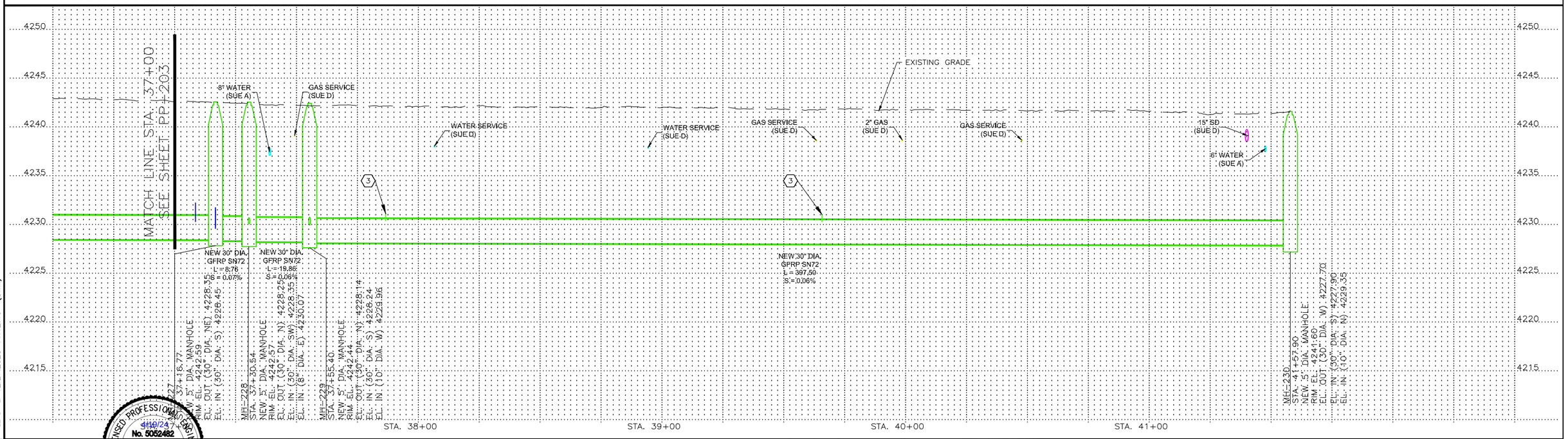


FILE NAME: PROJECTS\126 - SOUTH SALT LAKE CITY\42.200 - ZELLER AND DOWNTOWN SEWER IMPROVEMENTS\CAD\2 - DOWNTOWN AND PUMP STATION\PP-201 TO PP-204 DOWNTOWN-WTEMPLE.DWG
FILE DATE: 12.27.2023 11:12:46 (SWM)

HANSEN ALLEN & LUCE, Inc. ENGINEERS

LICENSED PROFESSIONAL ENGINEER No. 5052482 GREGORY S. TOMSIC 4/10/24 CIVIL

| | | | | | | |
|---|---|---|---|---|---|---|
| DESIGNED | TPB | 3 | | | | |
| DRAFTED | TPB | 2 | | | | |
| CHECKED | GST | 1 | | | | |
| DATE | APRIL 2024 | NO. | DATE | REVISIONS | BY | APVD. |

SCALE: AS SHOWN

SOUTH SALT LAKE

DOWNTOWN SEWER IMPROVEMENTS AND PUMP STATION
PLAN & PROFILE - WEST TEMPLE
STA. 37+00 TO STA. 41+58

SHEET: PP-204

126.42.300

7/04

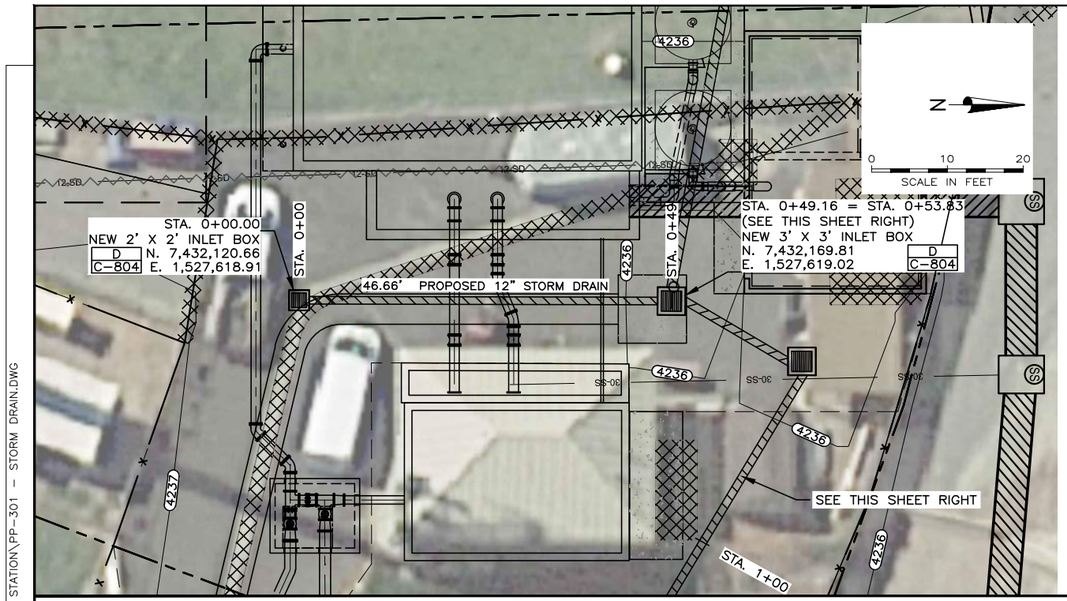


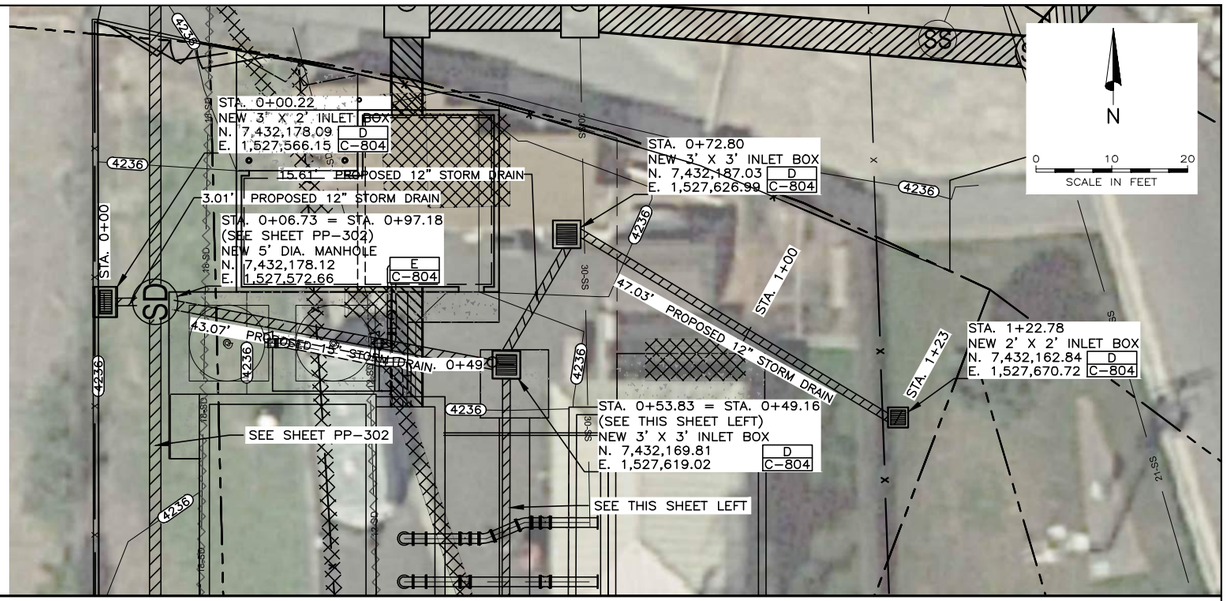


## NOTES:

1. CONTRACTOR SHALL PROTECT IN PLACE AND MAINTAIN IN SERVICE ALL EXISTING UTILITIES. REFER TO GENERAL NOTE 4 ON SHEET G-005.
2. REFER TO NOTE 1 ON SHEET G-102 FOR SUE LEVEL DEFINITIONS.
3. CONTRACTOR SHALL FIELD VERIFY MANHOLE RIM ELEVATIONS PRIOR TO FABRICATION OF MANHOLES.
4. PIPE INVERT ELEVATIONS ARE AT INSIDE EDGE OF MANHOLE.
5. PIPE LENGTHS ARE FROM INSIDE EDGE OF MANHOLE TO INSIDE EDGE OF MANHOLE.

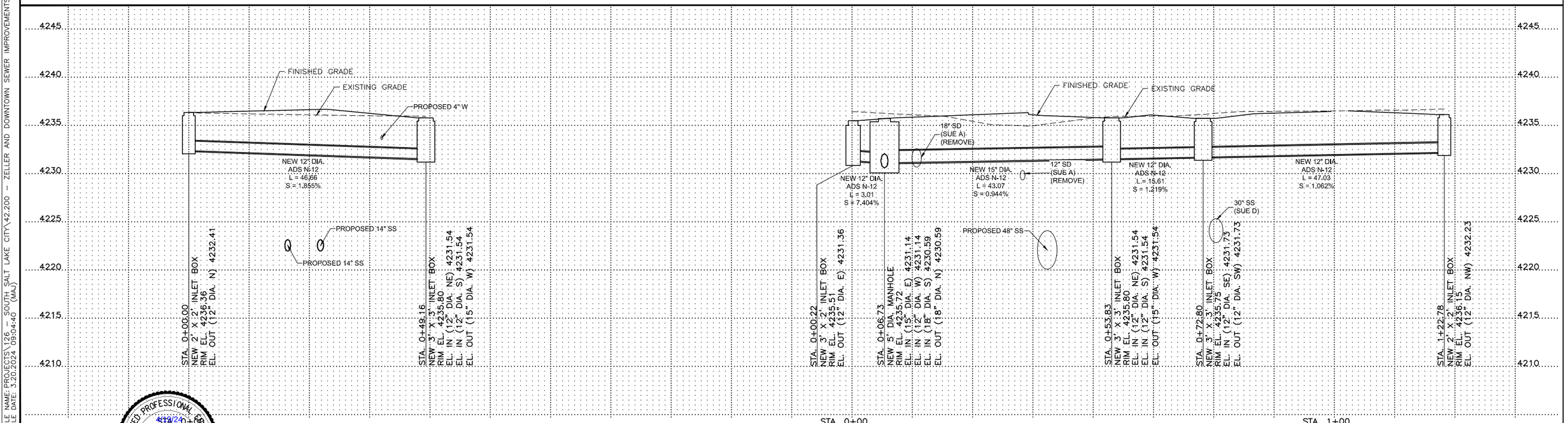


LICENSED PROFESSIONAL ENGINEER
No. 5052482
GREGORY S. THOMAS
STATE OF UTAH

| | | | | | | | |
|---|---|---|---|---|---|---|---|
| HANSEN ALLEN & LUCE inc ENGINEERS | DESIGNED TPB | 3 | | | | SCALE AS SHOWN | SOUTH SALT LAKE |
| | DRAFTED TPB | 2 | | | | | DOWNTOWN SEWER IMPROVEMENTS AND PUMP STATION<br>PLAN & PROFILE<br>LIFT STATION STORM DRAIN I |
| | CHECKED GST | 1 | | | | | SHEET PP-301 |
| | DATE APRIL 2024 | NO. | DATE | REVISIONS | BY | APVD. | 126.42.300 |

FILE NAME PROJECTS\126 - SOUTH SALT LAKE CITY\42.200 - ZELLER AND DOWNTOWN SEWER IMPROVEMENTS\CAD\2 - DOWNTOWN AND PUMP STATION\PP-301 - STORM DRAIN.DWG
FILE DATE: 3.20.2024 09:04:40 (MA)

7/04

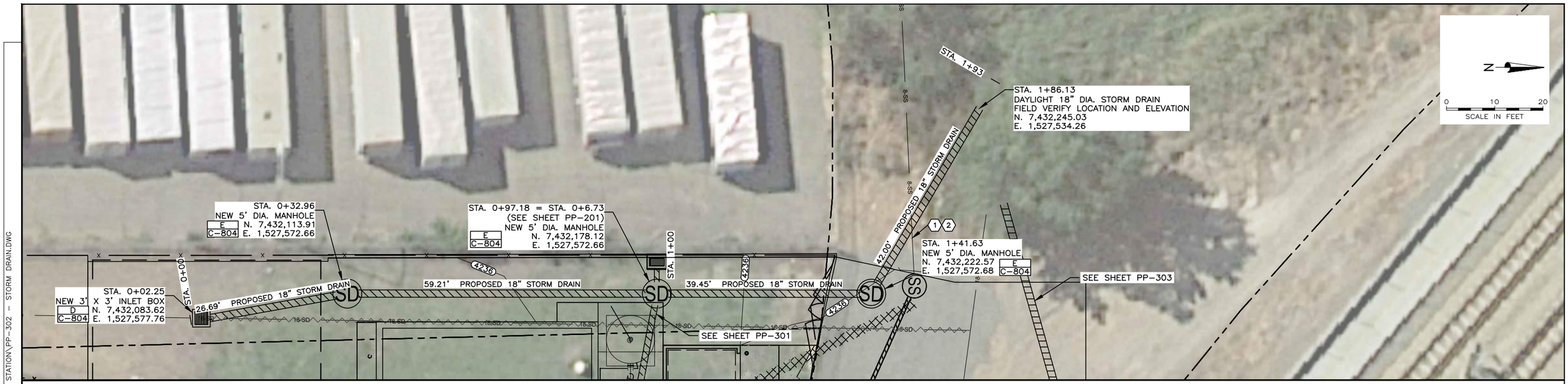


## NOTES:

1. CONTRACTOR SHALL PROTECT IN PLACE AND MAINTAIN IN SERVICE ALL EXISTING UTILITIES. REFER TO GENERAL NOTE 4 ON SHEET G-005.
2. REFER TO NOTE 1 ON SHEET G-102 FOR SUE LEVEL DEFINITIONS.
3. CONTRACTOR SHALL FIELD VERIFY MANHOLE RIM ELEVATIONS PRIOR TO FABRICATION OF MANHOLES.
4. PIPE INVERT ELEVATIONS ARE AT INSIDE EDGE OF MANHOLE.
5. PIPE LENGTHS ARE FROM INSIDE EDGE OF MANHOLE TO INSIDE EDGE OF MANHOLE.

## #KEYED NOTES:

(1) SIZE, ELEVATION AND LOCATION OF SEWER ESTIMATED. CONTRACTOR TO POTHOLE AND VERIFY ELEVATION PRIOR TO CONSTRUCTION STORM DRAIN. NOTIFY ENGINEER OF ANY CONFLICTS.

(2) IF CLEARANCE IS LESS THAN 1", EXPOSE SEWER PIPE AND THEN BACKFILL FROM SPRINGLINE OF SEWER PIPE TO SPRINGLINE OF STORM DRAIN PIPE WITH FLOWABLE FILL, UNLESS DIRECTED OTHERWISE BY ENGINEER.

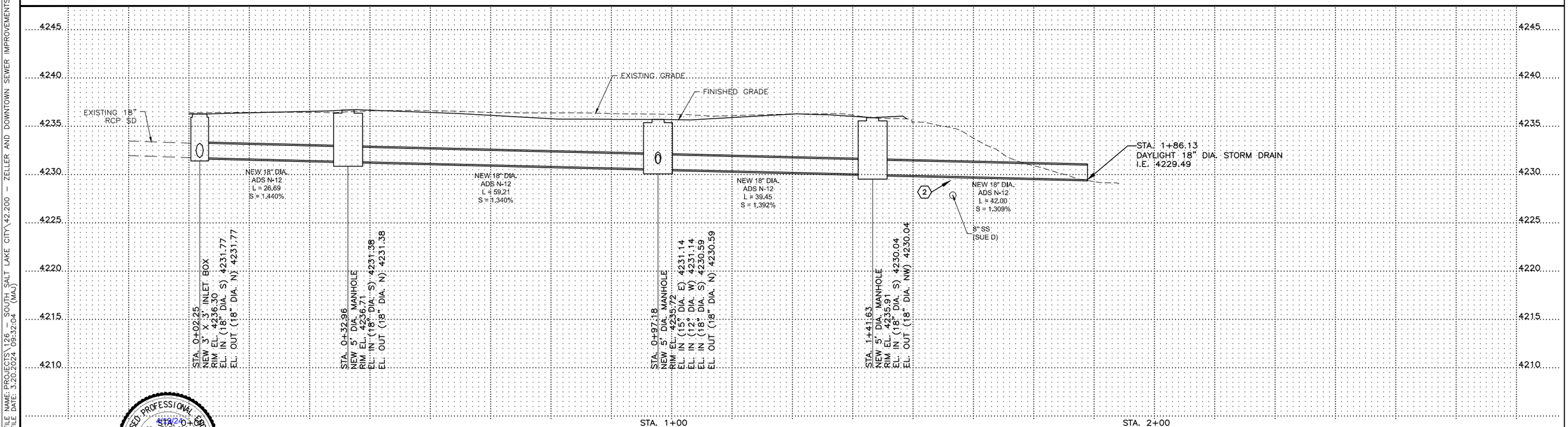


LICENSED PROFESSIONAL ENGINEER
No. 5052482
GREGORY S. THOMAS
STATE OF UTAH

| | | | | | | |
|---|---|---|---|---|---|---|
| DESIGNED | TPB | 3 | | | | |
| DRAFTED | TPB | 2 | | | | |
| CHECKED | GST | 1 | | | | |
| DATE | APRIL 2024 | NO. | DATE | REVISIONS | BY | APVD. |

HANSEN ALLEN & LUCE inc ENGINEERS

SCALE: AS SHOWN

SOUTH SALT LAKE

DOWNTOWN SEWER IMPROVEMENTS AND PUMP STATION
PLAN & PROFILE
LIFT STATION STORM DRAIN II

SHEET PP-302
126.42.300

FILE NAME: PROJECTS\126 - SOUTH SALT LAKE CITY\42.200 - ZELLER AND DOWNTOWN SEWER IMPROVEMENTS\CAD\2 - DOWNTOWN AND PUMP STATION\PP-302 - STORM DRAIN.DWG
FILE DATE: 3.20.2024 09:32:04 (MAJ)

7/04

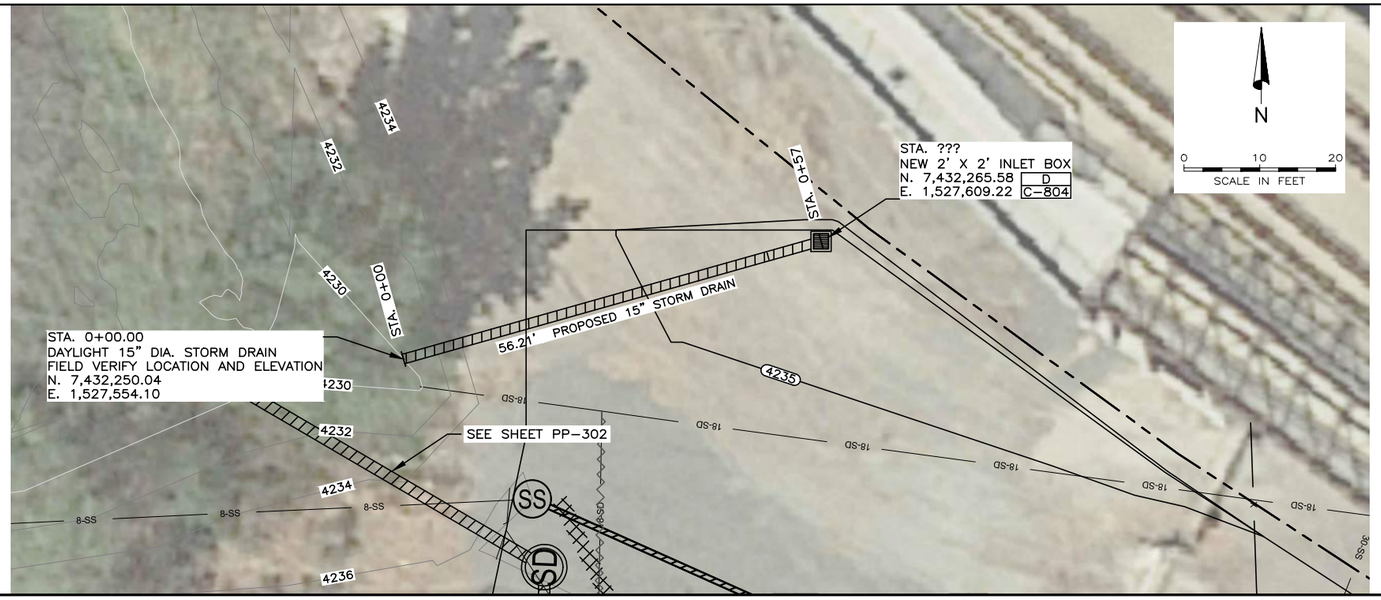


## NOTES:

1. CONTRACTOR SHALL PROTECT IN PLACE AND MAINTAIN IN SERVICE ALL EXISTING UTILITIES. REFER TO GENERAL NOTE 4 ON SHEET G-005.
2. REFER TO NOTE 1 ON SHEET G-102 FOR SUE LEVEL DEFINITIONS.
3. CONTRACTOR SHALL FIELD VERIFY MANHOLE RIM ELEVATIONS PRIOR TO FABRICATION OF MANHOLES.
4. PIPE INVERT ELEVATIONS ARE AT INSIDE EDGE OF MANHOLE.
5. PIPE LENGTHS ARE FROM INSIDE EDGE OF MANHOLE TO INSIDE EDGE OF MANHOLE.

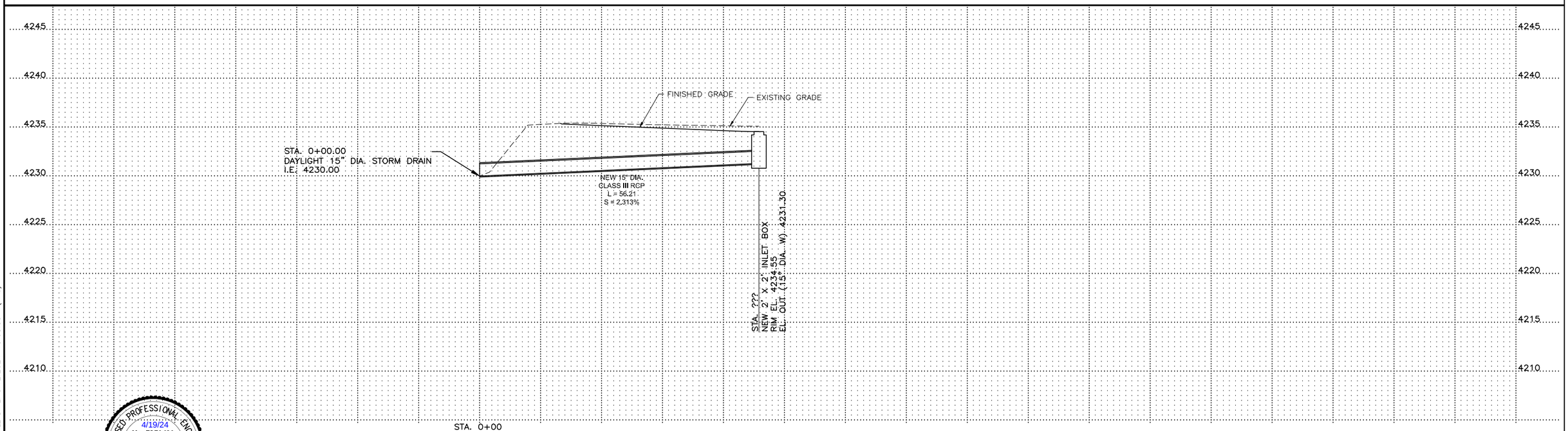


LICENSED PROFESSIONAL ENGINEER
4/19/24
No. 5052482
GREGORY S. THOMAS
STATE OF UTAH
REGISTERED ENGINEER

HANSEN ALLEN & LUCE inc
ENGINEERS

| | | | | | |
|---|---|---|---|---|---|
| DESIGNED | TPB | 3 | | | |
| DRAFTED | TPB | 2 | | | |
| CHECKED | GST | 1 | | | |
| DATE | APRIL 2024 | NO. | DATE | REVISIONS | BY APVD. |

SCALE: AS SHOWN

SOUTH SALT LAKE

DOWNTOWN SEWER IMPROVEMENTS AND PUMP STATION
PLAN & PROFILE
LIFT STATION STORM DRAIN III

SHEET: PP-303
126.42.300

FILE NAME PROJECTS\126 - SOUTH SALT LAKE CITY\42.200 - ZELLER AND DOWNTOWN SEWER IMPROVEMENTS\CAD\2 - DOWNTOWN AND PUMP STATION\PP-303 - STORM DRAIN.DWG
FILE DATE: 3.12.2024 13:08:35 (MA)

7/04

# GENERAL STRUCTURAL NOTES

## GENERAL NOTES:

1. THE GENERAL CONTRACTOR AND SUB-CONTRACTORS SHALL PROVIDE SUFFICIENT SKILLED WORKMEN AND SUPERVISORS WHO SHALL BE PRESENT AT ALL TIMES DURING EXECUTION OF THE WORK. A PROJECT MANAGER, SHALL BE ASSIGNED BY THE GENERAL CONTRACTOR, AND SHALL BE RESPONSIBLE FOR THE DAILY COORDINATION OF THE PROJECT AND SHALL MAINTAIN ALL REQUIRED DRAWINGS, SPECIFICATIONS, REPORTS, AND OTHER ITEMS FOR REVIEW AT THE SITE.
2. ALL CONSTRUCTION SHALL BE ACCORDING TO THE 2018 EDITION OF THE INTERNATIONAL BUILDING CODE (IBC). AS AMENDED BY THE STATE OF UTAH.
3. THE CONTRACTOR SHALL BE RESPONSIBLE FOR THE PROTECTION OF AND SAFETY IN AND AROUND THE JOB SITE AND/OR ADJACENT PROPERTIES.
4. THE CONTRACTOR AND/OR OWNER SHALL KEEP LOADS ON THE STRUCTURE WITHIN THE LIMITS OF THE DESIGN LOADS BOTH DURING AND AFTER CONSTRUCTION.

### DESIGN CRITERIA

1. RISK CATEGORY: IV
2. IMPORTANCE FACTOR, $I_s$ : 1.20
3. IMPORTANCE FACTOR, $I_e$ : 1.50
4. WIND SPEED (3 SECOND GUST): 115 MPH;
   EXPOSURE: "C"
5. SEISMIC DESIGN CATEGORY: "D"
   - SITE CLASS: "E"
   - Ss : 1.55g
   - Fa: 1.2
   - Sds: 1.24g
   - $S_1$: 0.553g
   - Fv: 1.447
   - $S_{d1}$ : 0.534g
   - R: 5
   - $\Omega_0$: 2.5
   - Cd: 3.5
6. ROOF DEAD LOAD: 20 PSF
7. GROUND SNOW LOAD (Pg): 28 PSF
8. ROOF LIVE/SNOW LOAD ($P_f$=$P_s$): 24 PSF
9. ROOF LIVE/SNOW LOAD (UNBALANCED) 34 PSF
10. SOILS REPORT PROVIDED BY: NINYO & MOORE (PROJECT #800051002)
    ALLOWABLE SOIL BEARING PRESSURE: 1100 PSF (UP TO 6 FT EMBEDMENT). ADD 150 PSF FOR EACH ADDITIONAL FOOT OF DEPTH UP TO 3200 PSF MAX)

    COEFFICIENT OF FRICTION (u): 0.36
    LATERAL PRESSURE FOR UNDERGROUND STRUCTURES: 58 PCF
    INCREASE FOR SATURATION: +27 PCF
    PASSIVE PRESSURE: 3000 PCF

## STRUCTURAL NOTES:

### REINFORCED CONCRETE:

1. ALL CONCRETE CONSTRUCTION, INCLUDING BENDING OF BARS, SHALL COMPLY WITH ACI "BUILDING CODE REQUIREMENTS FOR REINFORCED CONCRETE" (ACI 318).
2. UNLESS CALLED OUT OTHERWISE ON THE PLANS, MINIMUM REINFORCEMENT OF CONCRETE WORK SHALL BE:
   WALLS:
   8" THICK OR LESS – USE #5 @ 16" EW
   9" OR THICKER – USE #5 @ 12" EW, EF
   SLABS:
   8" THICK OR LESS – USE #4 @ 16" EW
3. ALL WALL REINFORCEMENT AT CORNERS OR JUNCTIONS OF WALLS SHALL BE CONTINUOUS, LAPPED, OR TERMINATED IN A STANDARD 90 DEGREE HOOK. LAP SPLICES SHALL CONFORM WITH NOTE 6.
4. UNLESS SHOWN OTHERWISE ALL BARS SHALL BE DOWELED. DOWELS SHALL BE THE SAME SIZE AND SPACING AS THE REINFORCEMENT WHICH IS TO BE SPLICED TO THE DOWELS.
5. ALL REINFORCING BARS SHALL BE GRADE 60 AND SHALL CONFORM TO ASTM A-615, CURRENT REVISION. REINFORCING STEEL SHALL BE NEW AND FREE FROM RUST, OIL OR OTHER BOND INHIBITOR.
6. ALL CONTINUOUS REINFORCING BARS SHALL LAP AT LEAST 40 BAR DIAMETERS. SPLICES SHALL BE MADE AWAY FROM POINTS OF MAXIMUM STRESS. MINIMUM LAP SHALL BE 18 IN.
7. CONCRETE COVER OVER REINFORCEMENT SHALL BE AS FOLLOWS:
   - 7.1. SURFACE NOT EXPOSED DIRECTLY TO THE GROUND, WATER OR WEATHER AFTER FORM REMOVAL:
     CONCRETE SLABS IN BUILDINGS – – – – – 3/4"
   - 7.2. CONCRETE SLABS IN WATER BEARING SURFACES EXPOSED DIRECTLY TO THE GORUND, WATER OR WEATHER AFTER FORM REMOVAL:
     FOR #5 BARS OR SMALLER– – – – – 1-1/2"
     FOR #6 BARS OR LARGER– – – – 2"
   - 7.3. CONCRETE PLACED DIRECTLY AGAINST GROUND – – – – 3"
   - 7.4. REINFORCEMENT SHALL BE PLACED WITHIN A TOLERANCE OF ±1/4" OF POSITION SPECIFIED.
8. CONCRETE CURING SHALL BE IN ACCORDANCE WITH THE CONTRACT DOCUMENTS. SOME CONCRETE WORK REQUIRES WATER CURING, AS MEMBRANE CURING IS NOT ALLOWED. THE CONTRACTOR IS WARNED THAT WATER CURING IS DIFFICULT AT TIMES DUE TO WIND AND DRY CONDITIONS. THE CONTRACTOR SHALL STUDY REQUIREMENTS AND SHALL FURNISH ADEQUATE SYSTEMS TO PROVIDE WATER CURING WHERE REQUIRED. TOP OF WALLS SHALL BE KEPT VISIBLY MOIST AT ALL TIMES AND SHALL BE FLOODED NOT LESS THAN THREE TIMES DAILY.
   - A. FOR POURING CONCRETE DURING COLD WEATHER:
     1. FOLLOW RECOMMENDATIONS CONTAINED IN PUBLICATION ACI 306R "COLD-WEATHER CONCRETING," CURRENT REVISION.
     2. PROTECT CONCRETE WORK FROM PHYSICAL DAMAGE OR REDUCED STRENGTH WHICH COULD BE CAUSED BY FROST, FREEZING ACTIONS OR LOW TEMPERATURES.
        WHEN AIR TEMPERATURE HAS FALLEN TO OR IS EXPECTED TO FALL BELOW 40°F OR 4°C, UNIFORMLY HEAT WATER AND AGGREGATES BEFORE MIXING TO OBTAIN A CONCRETE MIXTURE TEMPERATURE OF NOT LESS THAN 50°F OR 10°C, AND NOT MORE THAN 80°F OR 27°C AT TIME OF PLACEMENT.
        CONCRETE SHALL BE AIR ENTRAINED WITH AIR CONTENT OF 6% +/– 1% BY VOLUME.

### REINFORCED CONCRETE CONT.

4. CONCRETE SHALL BE AIR ENTRAINED WITH AIR CONTENT OF 6% +/– 1% BY VOLUME.
5. DO NOT USE FROZEN MATERIALS OR MATERIALS CONTAINING ICE OR SNOW. DO NOT PLACE CONCRETE ON FROZEN SUBGRADE OR ON SUBGRADE CONTAINING FROZEN MATERIALS.
6. DO NOT USE CALCIUM CHLORIDE, SALT OR OTHER MATERIALS CONTAINING ANTIFREEZE AGENTS OR CHEMICAL ACCELERATORS, UNLESS OTHERWISE APPROVED IN THE MIX DESIGN.
7. COVER AND HEAT CONCRETE FOR A MINIMUM OF 7 DAYS AS RECOMMENDED BY ACI 306R, CURRENT REVISION.

B. FOR POURING CONCRETE DURING HOT WEATHER:
   FOLLOW RECOMMENDATIONS CONTAINED IN PUBLICATION ACI 305R "HOT-WEATHER CONCRETING," CURRENT REVISION.
   PROTECT CONCRETE FROM FLASH CURING BY PROVIDING A WATER/MOISTURE CURE FOR 3 DAYS.
   A 4500 PSI (WITH A 6-1/2 BAG MIX) IS RECOMMENDED FOR THESE CONDITIONS.

9. NO BACKFILL SHALL BE PLACED AGAINST WALLS UNTIL CONCRETE HAS REACHED 85 PERCENT OF THE SPECIFIED STRENGTH AND THE CONNECTING SLABS AND BEAMS HAVE BEEN CAST AND HAVE REACHED 85 PERCENT OF THE SPECIFIED STRENGTH.
10. CONCRETE TO HAVE A MIN 28 DAY STRENGTH OF 4000 PSI, EXCEPT IN AREAS THAT COME IN CONTACT WITH SEWAGE/CHEMICALS. THOSE AREAS TO HAVE MIN 28 DAY STRENGTH OF 4500 PSI.

### MASONRY WALL REINFORCING NOTES:

1. WALL REINFORCEMENT SHALL BE PLACED AND GROUTED AS DESCRIBED IN THE SPECIFICATIONS AND SHALL CONFORM TO IBC REQUIREMENTS.
2. ALL WALLS SHALL BE REINFORCED WITH A MINIMUM OF (1) #5 VERTICAL REINFORCING GROUTED PER WALL SECTIONS AND (1) #5 @ 48" OC HORIZONTAL BOND BEAM. SEE WALL ELEVATION OR NOTE 5 FOR ADDITIONAL VERTICAL REINFORCEMENT ADJACENT TO WALL OPENINGS. WALLS TO BE PARTIALLY GROUTED.
3. ALL VERTICAL REINFORCING SHALL EXTEND TO ROOF LEVEL AND SHALL BE DOWELED TO THE FOOTING WITH MATCHING DOWELS.
4. ALL DOWELS SHALL LAP WALL REINFORCING 48 DIA AND EXTEND INTO FOUNDATION A MINIMUM OF 40 DIA OR EXTEND 12 DIA PLUS HAVE A STANDARD HOOK.
5. A #5 VERTICAL BAR SHALL BE PLACED AND GROUTED AT ALL WALL CORNERS AND WALL INTERSECTIONS AND TWO #5 VERTICAL BARS SHALL BE PLACED AT JAMBS OF WALL OPENINGS AND SUCH BARS SHALL EXTEND THE FULL HEIGHT OF WALL AND BE ANCHORED IN THE ROOF BOND BEAM AND FOOTING AS SPECIFIED IN PARAGRAPH ABOVE.
6. LINTELS FOR ALL OPENINGS SHALL BE AS PER DETAILS. "TYPICAL WALL DETAILS", UNLESS OTHERWISE NOTED.
7. ALL HORIZONTAL AND VERTICAL JOINTS ON MASONRY UNITS SHALL BE CONCAVE ON BOTH FACES UNLESS SHOWN OR SPECIFIED OTHERWISE.
8. MASONRY CONTROL JOINTS IN WALLS SHALL BE INSTALLED AT 24'-0"± SPACING UNLESS SHOWN OTHERWISE.
9. EXTERIOR WALL CELLS SHALL BE PARTIALLY GROUTED. EXTERIOR WALL CELLS NOT FILLED WITH GROUT SHALL BE FILLED WITH INSULATION.
10. ALL REINFORCING BARS SHALL BE GRADE 60, AND SHALL CONFORM WITH: "SPECIFICATIONS FOR DEFORMED BILLET-STEEL BARS FOR CONCRETE REINFORCEMENT", ASTM A-615. REINFORCING BARS SHALL BE NEW, FREE FROM RUST, OIL OR OTHER BOND INHIBITOR. WELDABLE REBAR TO BE ASTM A-706.
11. COLD WEATHER PLACEMENT OF MASONRY: IF THE LOW TEMPERATURE FOR ANY 24-HOUR PERIOD FOR THE FIRST SEVEN DAYS AFTER THE MASONRY IS PLACED OR GROUTED DROPS BELOW 40°F BUT REMAINS ABOVE 28°F, COVER MASONRY WITH INSULATED BLANKETS. IF THE TEMPERATURE DROPS BELOW 28°F FOR ANY PERIOD AS DESCRIBED ABOVE, APPLY HEAT AND INSULATED BLANKETS AND MAINTAIN A TEMPERATURE AT OR ABOVE 34°F FOR SEVEN DAYS.
12. PROVIDE (2) #5 @ TOP OF WALLS (TYP)
13. ALL MASONRY TO HAVE SPECIAL INSPECTION PER TABLE 1704.5.1 OF IBC.
14. ALL TERMINAL BARS TO HAVE HOOK @ END.

### WELDING

1. WELDS SHALL CONFORM TO AMERICAN WELDING SOCIETY (AWS), LATEST EDITION:
   D1.1, STRUCTURAL WELDING CODE – STEEL
   D1.2, STRUCTURAL WELDING CODE – ALUMINUM
   D1.3, STRUCTURAL WELDING CODE – SHEET STEEL
   D1.4, STRUCTURAL WELDING CODE – REINFORCING STEEL
   D1.6, STRUCTURAL WELDING CODE – STAINLESS STEEL
2. REPAIR WELDS FOUND DEFECTIVE IN ACCORDANCE WITH AWS D1.1, SEC 5.26.
3. USE INTERMITTENT WELDS AT FIELD WELDS OF EMBED PLATES AND ANGLES TO AVOID SPALLING OR CRACKING OF THE EXISTING CONCRETE.

### WOOD FRAMING NOTES

1. FRAMING LUMBER: DOUGLAS FIR LARCH (SURFACED DRY NOT TO EXCEED 19% MAXIMUM MOISTURE CONTENT), CONFORMING TO NATIONAL DESIGN SPECIFICATIONS (NDS) SUPPLEMENTS FOR WOOD DESIGN VALUES AND APPLICABLE STANDARDS IN THE FOLLOWING GRADES:
   - A. SILLS: REDWOOD, OR PRESSURE TREATED, FOUNDATION GRADE.
   - B. PLATES @ TOP OF MASONRY WALLS: DOUGLAS FIR-LARCH, NO. 1, FB=1000 PSI MIN
   - C. STUDS: DOUGLAS FIR-LARCH, OR HEMLOCK-FIR, STUD GRADE.
   - D. BEAMS, JOISTS, LEDGERS, POSTS & HEADERS: DOUGLAS FIR-LARCH, NO. 2 MIN, 900 PSI MIN
   - E. ALL OTHER HORIZONTAL FRAMING MEMBERS: DOUGLAS FIR-LARCH, CONSTRUCTION GRADE.
   - F. ALL OTHER VERTICAL FRAMING MEMBERS: DOUGLAS FIR-LARCH, STANDARD OR BETTER GRADE.
   - G. SHEATHING: STANDARD EXTERIOR GRADE WITH EXTERIOR GLUE. APA RATED.
   - H. GLUE-LAM BEAMS: OUGLAS FIR-LARCH, 2400 PSI WITH AITC STAMP FOR QUALITY
2. PROVIDE SOLID BLOCKING AT LEAST 1-1/2" THICK AT ENDS AND AT EACH SUPPORT OF JOIST. PROVIDE APPROVED BRIDGING AT A MAXIMUM 8'-0" OC BETWEEN SUPPORTS.
3. NAILING SHALL CONFORM TO STANDARD NAILING SCHEDULE 2304.10.1 OF INTERNATIONAL BUILDING CODE UNLESS NOTED OTHERWISE ON PLANS OR SCHEDULES. ALL NAILS SHALL BE COMMON NAILS.

### WOOD FRAMING NOTES CONT.

USE SIMPSON STRONG TIE (SST) HANGERS FOR ALL FLUSH CONNECTIONS. USE STRONGEST HANGER COMPATIBLE WITH MEMBER SIZE AND NAIL PER MANUFACTURER'S SPECIFICATION TO OBTAIN MAXIMUM LOAD CARRYING CAPACITY.

ALL METAL HANGERS AND CONNECTORS SHALL BE "SIMPSON" OR EQUAL.

SECURE SILL PLATE TO CONCRETE WITH 5/8" DIA X 12" AB @ 8" OC UNLESS NOTED OTHERWISE ON PLAN.

DOUBLE TOP AND BOTTOM PLATES TO BE LAPPED 4'-0" AT SPLICE AND CONNECT WITH 16D COMMON NAILS @ 3" OC, STAGGERED.

NOTCHING OR DRILLING THROUGH ANY LUMBER MEMBER WILL NOT BE ALLOWED WITHOUT SPECIFIC APPROVAL OF STRUCTURAL ENGINEER.

ROOF SHEATHING:

- A. (5/8)" A.P.A. RATED STRUCTURAL II, EXTERIOR, PANEL INDEX #32/16, UNLESS NOTED OTHERWISE
- B. NAIL WITH: 10D @ 6" OC – PANEL EDGES, UNLESS NOTED OTHERWISE
  10D @ 12" OC – ALL ELSE, UNLESS NOTED OTHERWISE
- C. INSTALL ROOF SHEATHING WITH "H" CLIPS.

10. KEEP ALL MATERIAL CLEARLY IDENTIFIED WITH ALL GRADE MARKS LEGIBLE. KEEP ALL DAMAGED MATERIAL CLEARLY IDENTIFIED AS DAMAGED AND SEPARATELY STORED TO PREVENT ITS INADVERTENT USE. IN THE EVENT OF DAMAGE, IMMEDIATELY MAKE ALL REPAIRS AND REPLACEMENTS NECESSARY TO THE APPROVAL OF THE ENGINEER AND AT NO ADDITIONAL COST TO THE OWNER.
11. PROVIDE 3"X3"X1/4" SLOTTED PLATE WASHERS AT ALL BOLTS IN PLATES, AND 2" DIAMETER PLATE WASHERS AT ALL BOLTS IN LEDGERS, BEAMS, AND COLUMNS. UNLESS OTHERWISE SPECIFIED, USE A307 BOLTS.
12. PROVIDE SOLID BLOCKING UNDER ALL LOCATIONS WHERE CONCENTRATED LOADS ARE LOCATED, SUCH AS COLUMNS, POSTS, BEAMS, ETC. FULL SUPPORT MUST BE PROVIDED TO THE FOUNDATION.

### WOOD TRUSSES NOTES

1. DESIGN TRUSSES FOR FOLLOWING CRITERIA:
   DEAD LOAD = 20 PSF
   LIVE LOAD = 24 PSF (BALANCED SNOW)
   LIVE LOAD DEFLECTION = L/480 MAXIMUM

   NOTE: ALL TRUSSES TO BE DESIGNED FOR UNBALANCED AND DRIFT LOADS PER ASCE-7. TRUSSES IN STORAGE AREA TO BE DESIGNED TO MEET ALL EQUIPMENT LOADS AND RISK CATEGORY IV.
2. PROVIDE BRIDGING AT TOP AND BOTTOM CHORDS AND STRUT BRACING, PER MANUFACTURER'S RECOMMENDATIONS.
3. NO STRESS INCREASE ALLOWED FOR TRUSS DESIGN.
4. DESIGN AND FABRICATION OF ALL TRUSSES SHALL COMPLY WITH REQUIREMENTS OF DESIGN SPECIFICATIONS FOR LIGHT METAL PLATE CONNECTED WOOD TRUSSES' BY THE TRUSS PLATE INSTITUTE.
5. TRUSS MANUFACTURER SHALL DESIGN AND FABRICATE TRUSSES TO SUPPORT LOADS SHOWN ON DRAWINGS. COORDINATE DESIGN WITH ALL MECHANICAL EQUIPMENT AND SUSPENDED LOADS. SUBMIT DESIGN CALCULATIONS BEARING STAMP OF A REGISTERED PROFESSIONAL ENGINEER LICENSED BY THE STATE OF UTAH.
6. SUBMIT SHOP DRAWINGS FOR REVIEW PRIOR TO FABRICATION INDICATING, FRAMING PLAN, BRIDGING AND BRACING, DIAGRAM OF THE TRUSSES WITH DIMENSIONS, SIZE AND GRADE OF MEMBERS, SIZE AND LOCATION OF METAL PLATES, BEARING DETAILS AND INSTRUCTION FOR INSTALLATION.
7. MOMENT COEFFICIENTS SHALL BE 1/8 FOR ONE AND TWO CONTINUOUS SPAN CONDITIONS AND 1/10 FOR THREE OR MORE CONTINUOUS SPAN CONDITIONS. LENGTH FACTOR FOR WEB DESIGN SHALL BE ONE. METAL PLATES AT COMPRESSION JOINTS SHALL BE DESIGNED FOR THE FULL LOAD WITHOUT CONSIDERING WOOD TO WOOD BEARING.
8. ALL METAL PLATE DIMENSIONS SHALL BE INCREASED BY 10% ABOVE THAT REQUIRED BY THE ANALYSIS. ALLOWABLE STRESS FOR METAL PLATE SHALL NOT BE INCREASED FOR THE LOAD DURATION. METAL PLATES SHALL BE PRESSED OR ROLLED INTO MEMBERS TO OBTAIN FULL PENETRATION WITHOUT CRUSHING THE WOOD SURFACE.
9. ALL METAL PLATES SHALL BE GALVANIZED STEEL AND SHALL BE ON BOTH SIDES OF EACH CONNECTION. SUBMIT A COPY OF THE I.C.B.O. APPROVAL, INCLUDING ALLOWABLE STRESSES ESTABLISHED BY THIS COMMITTEE, FOR METAL PLATES USED.
10. ALL LUMBER SHALL BE DOUGLAS FIR OR YELLOW PINE #1 GRADE. MOISTURE CONTENT SHALL NOT EXCEED 19% NOR SHALL BE LESS THAN 7%. HANDLING, STORAGE AND INSTALLATION OF ALL TRUSSES SHALL BE DONE SUCH THAT THE SPECIFIED MINIMUM AND MAXIMUM MOISTURE CONTENT LIMITS ARE NOT EXCEEDED. GRADE STAMPS SHALL APPEAR ON ALL MEMBERS.
11. PRIOR TO FABRICATION, CONTRACTOR SHALL SUBMIT IN WRITING PROOF OF COMPLIANCE OF IN PLANT INSPECTION BY AN I.C.B.O. APPROVED INDEPENDENT INSPECTION AGENCY. SUBMIT SHOP DRAWINGS FOR TRUSS LAYOUT & DESIGN.
12. A HURRICANE TIE IS TO BE INSTALLED AT EACH TRUSS TO DOUBLE TOP PLATE LOCATION OR AS REQUIRED ON PLANS.
13. TRUSS MANUFACTURER IS RESPONSIBLE FOR ALL TRUSS HANGERS.

### SUBMITTALS:

1. THE FOLLOWING INFORMATION AND SUBMITTALS SHALL BE PROVIDED TO THE CONSTRUCTION MANAGER (CM) BEFORE FABRICATION AND/OR DELIVERY TO THE JOBSITE, NOT ALL MAY APPLY.
   - A. CONCRETE MIX DESIGNS.
   - B. CONCRETE REINFORCEMENT SHOP DRAWINGS.
   - C. MASONRY SPECIFICATIONS.
   - D. MASONRY MORTAR MIX DESIGNS.
   - E. MASONRY REINFORCEMENT SHOP DRAWINGS.
   - F. STRUCTURAL BACKFILL PIT LOCATION AND MATERIAL SPECIFICATION, IF USED ON SITE.
   - G. STRUCTURAL STEEL SHOP DRAWINGS.
   - H. OPEN WEB ROOF TRUSSES, SHOP DRAWINGS FROM MANUFACTURER.
   - I. OTHER SHOP DRAWINGS & SUBMITTALS AS DEEMED NECESSARY BY THE CONSTRUCTION MANAGER.
   - J. SPECIAL INSPECTION PER SHEET S-101.

### SOIL NOTES

1. SOILS REPORT WAS PREPARED FOR THE SITE BY NINYO & MOORE (PROJECT #800051002). ALL RECOMMENDATIONS CONTAINED IN THE REPORT SUPERCEDE ALL NOTES IN DRAWINGS.
2. ALL ORGANIC MATERIALS, RUBBISH, UNSUITABLE FILL, TOPSOIL, ETC. SHALL BE REMOVED FROM BENEATH LOCATIONS OF PROPOSED FOOTINGS, CONCRETE SLABS AND ASPHALT PAVING. THE GEOTECHNICAL REPORT INDICATES THAT UP TO 8 FEET OF FILL MAY NEED TO BE REMOVED AND REPLACED. REFER TO FOUNDATION SPECIAL INSPECTIONS ON S-101.
3. SLABS SHALL BE PLACED ON COMPACTED GRANULAR BACKFILL COMPACTED PER GEOTECHNICAL REPORT.
4. UNLESS OTHERWISE NOTED, STRUCTURAL BACKFILL SHALL CONFORM TO:
   - A. IMPORTED GRANULAR MATERIAL SHALL BE FREE OF ORGANIC MATTER AND OTHER DELETERIOUS SUBSTANCES.
   - B. SHALL COMPLY WITH SPECIFICATIONS FOR GRADATIONS.
5. ALL FREE WATER SHALL BE REMOVED FROM THE FOUNDATION EXCAVATION PRIOR TO PLACING CONCRETE.
6. EXTERIOR FOOTINGS AND GRADE BEAMS SHALL BE LOCATED AT LEAST 30" BELOW FINISHED GRADE, AND MAINTAIN 6" BETWEEN FINISH GRADE AND WOOD FRAMING.
7. CONTRACTOR SHALL REMOVE ALL UNSUITABLE FILL FROM UNDER ALL CONCRETE FLATWORK, PAVEMENT, BUILDINGS AND STRUCTURES, ACCORDING TO THE GEOTECHNICAL REPORT AND REPLACE WITH STRUCTURAL FILL COMPACTED TO 95% MAX DRY DENSITY PER ASTM D-1557 OR AS PER GEOTECHNICAL REPORT.

### ANCHOR NOTES:

1. ALL ANCHORS TO BE INSTALLED PER THE MANUFACTURER'S REQUIREMENTS. FOR BOTH MECHANICAL AND EPOXY TYPE ANCHORS THESE REQUIREMENTS INCLUDE, BUT IS NOT LIMITED TO:
   - A. PROPER HOLE DIAMETER, DEPTH, EDGE DISTANCES, AND SPACING.
   - B. PROPER HOLE PREPARATION AND CLEANOUT
   - C. WEATHER REQUIREMENTS TO BE FOLLOWED, ESPECIALLY FOR COLD WEATHER APPLICATIONS.
   - D. ALL STRUCTURAL ANCHORS TO COMPLY WITH THE CRACKED CONCRETE REQUIREMENTS ON THE CURRENT EDITION OF THE ACI 318.
2. ANY EPOXY TYPE ANCHOR IS TO MEET THE CURRENT ANSI/NSF 61 REQUIREMENTS FOR DRINKING WATER SYSTEM COMPONENTS, WHERE APPLICABLE.

### SEISMIC BRACKETS:

1. CONTRACTOR TO SUBMIT FOR REVIEW AND APPROVAL SEISMIC BRACKETS FOR HVAC, MECHANICAL AND ELECTRICAL EQUIPMENT TO MEET LOCAL CODES.

### STRUCTURAL STEEL AND METAL FABRICATIONS:

1. ALL STRUCTURAL STEEL AND STRUCTURAL STEEL WORK SHALL COMPLY WITH "SPECIFICATIONS FOR THE DESIGN, FABRICATION AND ERECTION OF STRUCTURAL STEEL FOR BUILDINGS OF THE AISC" AND THE "AISC CODE OF STANDARD PRACTICE."
2. STRUCTURAL STEEL SHALL CONFORM TO THE FOLLOWING:

| | |
|---|---|
| W-SHAPES | A992 |
| MISCELLANEOUS SHAPES INCLUDING ANGLES, CHANNELS, PLATES, ETC. | A36 |
| SQUARE OR RECTANGULAR STEEL | A500, GRADE B |
| TUBING STEEL PIPE | CLASS 53, GRADE B |

3. STRUCTURAL STEEL SHALL BE FABRICATED AND ERRECTED IN CONFORMANCE WITH THE AISC MANUAL OF STEEL CONSTRUCTION, CURRENT EDITION, AND CURRENT OSHA STANDARDS.
4. ALL WELDS AND WELDING SHALL BE IN ACCORDANCE WITH THE SPECIFICATIONS OF "THE AMERICAN WELDING SOCIETY, USING ELECTRODES AS SPECIFIED THEREIN." WELDS TO BE MADE WITH E – 70XX ELECTRODES UNO.
5. BOLTS SHALL BE HIGH STRENGTH BOLTS CONFORMING TO THE FOLLOWING, EXCEPT WHERE SPECIFICALLY INDICATED OTHERWISE:

| | |
|---|---|
| UNLESS SHOWN OTHERWISE | A325-N |
| SLIP CRITICAL | A325-SC |
| ANCHOR BOLTS (AB) | |
| STAINLESS STEEL | F593, AISI TYPE 316, CONDITION CW |
| STEEL | F1554, GR 36 |
| GALVANIZED STEEL | F1554, GR 36/A153 |
| MACHINE BOLTS (MB) | A307 |

6. USE A307 BOLTS WITH PLATE WASHERS, UNLESS OTHERWISE SPECIFIED, FOR TYPICAL CONNECTIONS AND CONNECTIONS TO CONCRETE.
7. USE A325 BOLTS WITH PLATE WASHERS, UNLESS OTHERWISE SPECIFIED, FOR STEEL TO STEEL CONNECTIONS.
8. ITEMS TO EMBEDDED IN CONCRETE SHALL BE CLEAN AND FREE OF OIL, DIRT AND PAINT.
9. NO HOLES OTHER THAN THOSE SPECIFICALLY DETAILED SHALL BE ALLOWED THROUGH STRUCTURAL STEEL MEMBERS. NO CUTTING OR BURNING OF STRUCTURAL STEEL IS PERMITTED WITHOUT THE APPROVAL OF THE ENGINEER.
10. METAL FLASHING SHALL BE HOT DIP GALVANIZED, OR HAVE OTHER APPROVED EQUAL CORROSION RESISTANCE.
11. MATERIAL SHALL COMPLY WITH THE FOLLOWING STANDARDS U.N.O.

| | |
|---|---|
| TYPICAL BOLTS | ASTM A-307 GRADE A |
| HIGH STRENGTH BOLTS | ASTM A-325 |
| ANCHOR BOLTS | ASTM A-307 GRADE A |
| NUTS FOR ANCHOR BOLTS | ASTM A-563 GRADE A |
| STEEL TUBES | ASTM A-500 GRADE B WITH YIELD STRENGTH EQUAL TO 46 KSI |
| STEEL PIPES | ASTM A-53 GRADE B TYPE E OR S DEFORMED BAR |
| ANCHORS | MANUFACTURED BY NELSON STUD CO. OR EQUAL |
| HEADED STUD ANCHORS | ASTM A-108 MANUFACTURED BY NELSON STUD CO. OR EQUAL |
| ALL OTHER STEEL SHAPES | ASTM A-36 WITH YIELD STRENGTH EQUAL TO 36 KSI. |

FILE NAME: PROJECTS\126 – SOUTH SALT LAKE CITY\42.200 – ZELLER AND DOWNTOWN SEWER IMPROVEMENTS\CAD\2 – DOWNTOWN AND PUMP STATION\S-100 GENERAL STRUCTURAL NOTES.DWG
FILE DATE: 7-6-2024 14:28:41 (MAJ)

PROFESSIONAL STRUCTURAL ENGINEER No. 2774619 ROBERT C. CONDER 4/18/2024 STATE OF UTAH

LICENSED PROFESSIONAL ENGINEER 4/19/24 No. 5052482 GREGORY S. THOMAS STATE OF UTAH

HANSEN ALLEN & LUCE inc ENGINEERS

7/04

| | | | | | | |
|---|---|---|---|---|---|---|
| DESIGNED | ACS | 3 | | | | |
| DRAFTED | MAJ | 2 | | | | |
| CHECKED | GST | 1 | | | | |
| DATE | APRIL 2024 | NO. | DATE | REVISIONS | BY | APVD. |

SCALE: NONE

SOUTH SALT LAKE

DOWNTOWN SEWER IMPROVEMENTS AND PUMP STATION
STRUCTURAL
GENERAL STRUCTURAL NOTES

SHEET S-100

126.42.300

# SPECIAL INSPECTIONS

## SCHEDULE OF SPECIAL INSPECTIONS APPLICABLE TO THIS PROJECT

| MATERIAL/ACTIVITY | TYPE OF INSPECTION | C/P * | EXTENT/REFERENCE | INSP INITIALS | INSP DATE |
|---|---|---|---|---|---|
| **GENERAL** | | | | | |
| Pre-construction conference | Meeting with Owner, Contractor and Registered Design Professional to discuss Special Inspection procedures | P | Scheduled by DCRA with the Contractor prior to commencement of work | | |
| **EARTHWORK** | | | | | |
| Site preparation (building) | Field testing and inspection | P | Field Review; IBC 1705.6 | | |
| Fill material (building) | Review submittals, field testing and inspection | P | Field Review; IBC 1705.6 | | |
| Fill compaction (building) | In-place density tests, lift thickness | C | Field Review; IBC 1705.6 | | |
| Excavation | Field inspection and verification of proper depth | P | Field Review; IBC 1705.6 | | |
| Foundation sub-grade | Field inspection of foundation subgrade prior to placement of concrete | P | Field Review; IBC 1705.6 | | |
| **MASONRY (Level__; Building Risk Category ) TYPICAL FOR LEVEL B AND RISK CATEGORY I,II,III** | | | | | |
| Materials | Review of products supplied versus certificate of compliance and material submitted | P | Submittal & Field Review; ACI 530/ASCE 5; ACI 530.1/ASCE 6; IBC 1705.4, 1708 | | |
| Strength | Testing/review of strength | C | Submittal & Field Review; ACI 530/ASCE 5; ACI 530.1/ASCE 6; IBC 1705.4, 2105.2.2, 2105.3 | | |
| Mortar and Grout | Inspection of proportioning and mixing. Placement of mortar only. | C | Field Review; IBC 1705.4; ACI 530/ASCE 5; ACI 530.1/ASCE 6 | | |
| Grout placement, including pre-stressing grout | Verification to ensure compliance | C | Field Review; IBC 1705.4; ACI 530/ASCE 5; ACI 530.1/ASCE 6 | | |
| Grout space | Verification to ensure compliance | P | Field Review; IBC 1705.4; ACI 530/ASCE 5;ACI 530.1/ASCE 6; TMS 602 | | |
| Mortar, grout, and prism specimens | Observe Preparation | C | Field Review; IBC 1704.5, ACI 530.1; ASCE 6; | | |
| Reinforcement, pre-stressing tendons, and connections | Inspect condition, size, location, and spacing | P | Field Review; IBC 1704.5; ACI 530/ASCE 5; ACI 530.1/ASCE 6 | | |
| Welding of reinforcing bars | Inspection and testing of welds | C | Field Review; IBC 1705.4; ACI 530/ASCE 5;ACI 530.1/ ASCE 6 | | |
| Pre-stressing force | Verify application and measurement | C | Field Review; IBC 1705.4; ACI 530/ASCE 5; ACI 530.1/ASCE 6 | | |
| Protection | Inspect procedures for protection during cold and hot weather | P | Field Review; IBC 1705.4,; ACI 530/ASCE 5; ACI 530.1/ASCE 6 | | |
| Anchorage | Inspection of anchorages | P | Field Review; ACI 530.1/ASCE 6, ASCE 6; IBC 1705.4; ACI 530/ASCE 5 | | |
| Masonry installation | Inspection of placement of masonry and joints ( Periodic after the first 5000sq.ft ) | C | Field Review; ACI 530/ASCE 5; ACI 530.1/ASCE 6; IBC 1705.4 | | |
| Grouting of pre-stressed tendons | Field inspection | C | Field Review; ACI 318: 18.18.4; IBC 1705.3 | | |
| Application of forces for pre-stressed concrete | Field inspection | C | Field Review; ACI 318: 18.20; IBC 1705.3 | | |
| **CONCRETE** | | | | | |
| Materials | Review product supplied versus certificates of compliance and mix design | P | Submittal & Field Review; IBC 1705.3; ACI 318: Ch. 4 and 5; IBC 1904.2, 1910.2, 1903.3 | | |
| Installation of reinforcing steel, including Pre-stressed tendons and anchor bolts as well as welding | Field inspection of placement | P | Submittal and Field Review; ACI 318:3.5, 3.5.2 3.8.6 & Ch. 7 8.1.3 and 21.2.8; AWS D1.4; IBC 1705.3, 1908.5, 1909.1, 1910.4 | | |
| Formwork installation | Field inspection | P | Field Review; ACI 318: 6.1.1; IBC 1705.3 | | |
| Concreting operations and placement | Field inspection of placement/sampling | C | Field Review; ACI 318: 5.6, 5.8, 5.9-10; ASTM C 172, C 31; IBC 1705.3, 1910.6, 1910.7, 1910.8, 1910.10 | | |
| Concrete curing | Field inspection of curing process | P | Field Review; ACI 318: 5.11-13; IBC 1705.3, 1910.9 | | |
| Concrete strength | Evaluation of concrete strength | | Laboratory Testing; ACI 318: 6.2; IBC 1705.3 | | |

## SCHEDULE OF SPECIAL INSPECTIONS APPLICABLE TO THIS PROJECT

| MATERIAL/ACTIVITY | TYPE OF INSPECTION | C/P * | EXTENT/REFERENCE | INSP INITIALS | INSP DATE |
|---|---|---|---|---|---|
| **PRECAST CONCRETE** | | | | | |
| Verify fabrication/QC procedures In-plant | Inspection of plant and QC procedures** | | Submittal or Field Review; IBC 1705.3 | | |
| Erection and installation | Review submittals and as-built assemblies; Field inspection of in-place precast | | Submittal and Field Review; ACI 318; Ch. 16; IBC Table 1705.3 | | |
| **WOOD** | | | | | |
| Verify fabrication/QC procedures | In-plant inspection of fabrication/quality control procedures** or submit Certificate of Compliance | P | Submittal or Field Review; IBC 1704.2.5, 1705.5, 1705.5.2 | | |
| Metal plate connected wood/metal trusses spanning 60' or more | Review approved submittal and installation of restraint/bracing | P | Field Review; IBC 1704.2.5, 1705.5, 1705.2 | | |
| Joist Hangers – Materials/Installation | Review manufacturer's material and test standards | P | Field Review; IBC 1711, ASTM D 1761 | | |
| High-Load Diaphragms – Installation | Review submittal and as-built assemblies; inspection of sheathing, framing size, nail and staple diameter and length, number of fastener lines, and fastener spacing. | C | IBC 1705.5, 1705.5.1 | | |
| Wood Shear Walls–installation | Review nailing, bolting, anchoring, fastening, Diaphragms, struts, braces, and hold downs when fasteners are <4" on center. | P | Field Review; IBC1705.10.1 | | |

NOTES:

1. THE SPECIAL INSPECTOR IS RESPONSIBLE FOR ENSURING THE PUBLICATIONS USED FOR INSPECTION CRITERIA ARE THE MOST CURRENT AND UP TO DATE.
2. FAILURE OF INSPECTABLE AREAS ARE TO BE NOTED AND SUBMITTED TO OWNER, ENGINEER OF RECORD, AND GENERAL CONTRACTOR IF CORRETIONS REQUIRE A FOLLOW UP INSPECTION AND CANNOT BE MADE COMPLETED "ON THE SPOT".
3. DOCUMENTATION FOR INSPECTIONS MUST BE COMPLETED AND SUBMITTED IN ACCORDANCE WITH CONTRACT REQUIREMENTS, INTERNATIONAL BUILDING CODE (LATEST EDITION), AND "MANUAL FOR SPECIAL INSPECTIONS" (LATEST EDITION), OR AS AGREED UPON WITH OWNER, ENGINEER OF RECORD, AND CONTRACTOR.
4. SPECIAL INSPECTION DOES NOT INCLUDE OR WAIVE THE RESPONSBILITY FOR ANY REQUIRED INSPECTIONS BY THE BUILDING OFFICIAL. CONTRACTOR IS RESPONSIBLE FOR SCHEDULING BOTH INSPECTIONS.
5. SPECIFIED CONCRETE AND MASONRY TESTING DURING CONSTRUCTION WILL BE CONTRACTOR FURNISHED. SPECIFIED LAB TEST, MIXES, AND SIMILAR TESTING TO VERIFY MATERIAL QUALITY AND CONFORMANCE TO THE SPECIFICATIONS, REQUIRING SUBMITTAL FOR REVIEW AND ACCEPTANCE, SHALL BE THE RESPONSIBLITY OF CONTRACTOR.
6. STRUCTURAL OBSERVATIONS (OWNER FURNISHED) ARE REQUIRED IN ACCORDANCE WITH IBC SECTION 110 AND CHAPTER 17 AS INDICATED IN THE STATEMENT OF SPECIAL INSPECTION.
7. SPECIAL INSPECTOR TO BE PROVIDED BY OWNER.

P = PERIODIC INSPECTION
C = CONTINUOUS INSPECTION

PROFESSIONAL STRUCTURAL ENGINEER
No. 2774619
ROBERT C. CONDER
4/18/2024
STATE OF UTAH

LICENSED PROFESSIONAL ENGINEER
4/19/24
No. 5052482
GREGORY S. THOMAS
STATE OF UTAH

HANSEN ALLEN & LUCE inc
ENGINEERS

| | | | | | | | |
|---|---|---|---|---|---|---|---|
| DESIGNED | ACS | 3 | | | | | |
| DRAFTED | MAJ | 2 | | | | | |
| CHECKED | GST | 1 | | | | | |
| DATE | APRIL 2024 | NO. | DATE | REVISIONS | BY | APVD. | |

SCALE: NONE

SOUTH SALT LAKE

DOWNTOWN SEWER IMPROVEMENTS AND PUMP STATION
STRUCUTRAL
SPECIAL INSPECTIONS

SHEET S-101

126.42.300

FILE NAME: PROJECTS\126 - SOUTH SALT LAKE CITY\42.200 - ZELLER AND DOWNTOWN SEWER IMPROVEMENTS\CAD\2 - DOWNTOWN AND PUMP STATION\S-101 SPECIAL INSPECTIONS.DWG
FILE DATE: 3.6.2024 14:29:55 (MAJ)
7/04

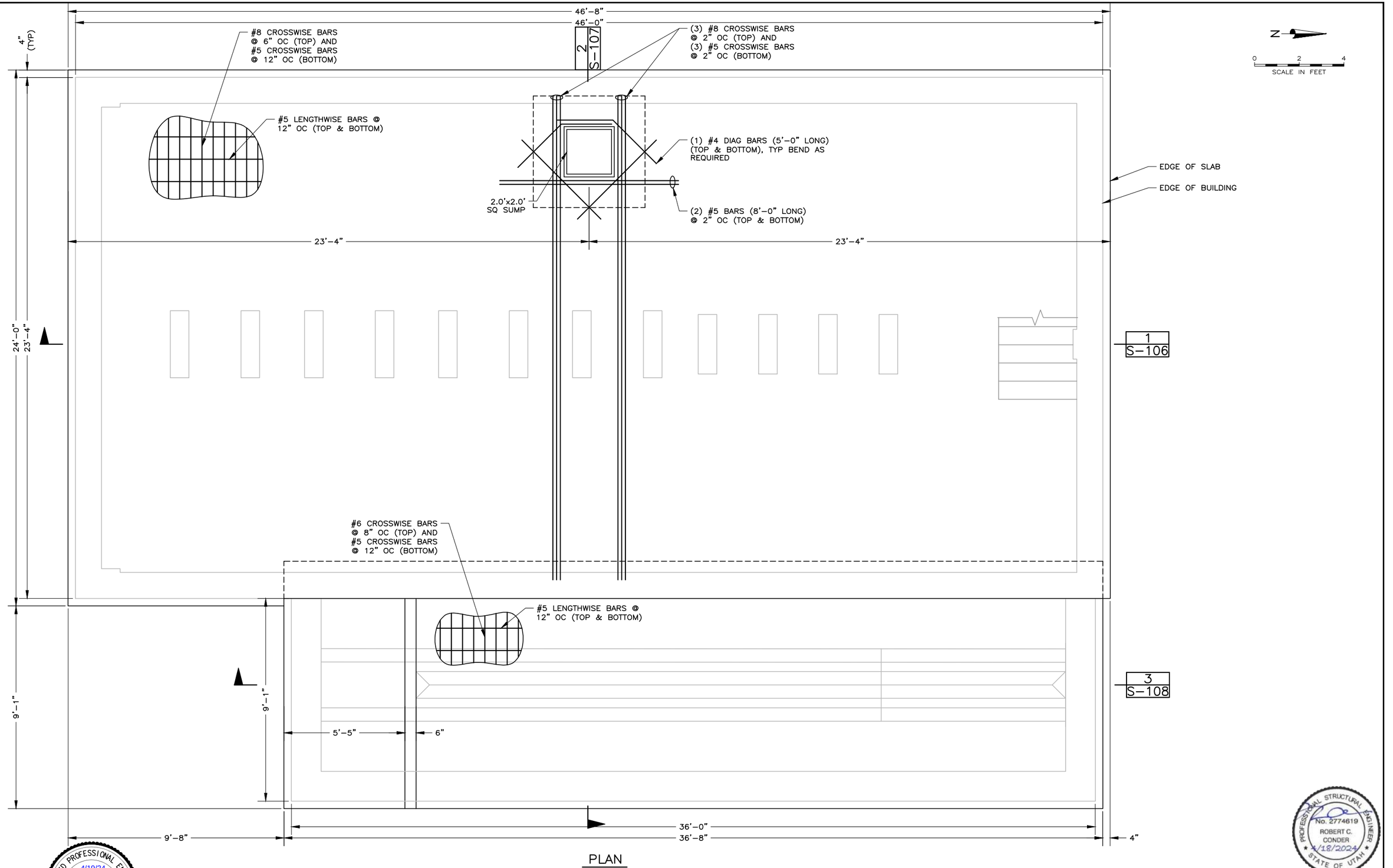


PLAN

FILE NAME: PROJECTS\126 - SOUTH SALT LAKE CITY\42.200 - ZELLER AND DOWNTOWN SEWER IMPROVEMENTS\CAD\2 - DOWNTOWN AND PUMP STATION\S-102 PUMPHOUSE FOUNDATION SLAB PLAN.DWG
FILE DATE: 3.6.2024 14:31:07 (MAJ)

7/04

HANSEN ALLEN & LUCE inc ENGINEERS

LICENSED PROFESSIONAL ENGINEER 4/19/24 No. 5052482 GREGORY S. THOMAS STATE OF UTAH

| | | | | | | |
|---|---|---|---|---|---|---|
| DESIGNED ACS | 3 | | | | | |
| DRAFTED MAJ | 2 | | | | | |
| CHECKED GST | 1 | | | | | |
| DATE APRIL 2024 | NO. | DATE | REVISIONS | BY | APVD. | |

SCALE: AS SHOWN

SOUTH SALT LAKE

DOWNTOWN SEWER IMPROVEMENTS AND PUMP STATION
STRUCTURAL
PUMPHOUSE FOUNDATION SLAB PLAN

SHEET S-102
126.42.300

PROFESSIONAL STRUCTURAL ENGINEER No. 2774619 ROBERT C. CONDER 4/18/2024 STATE OF UTAH

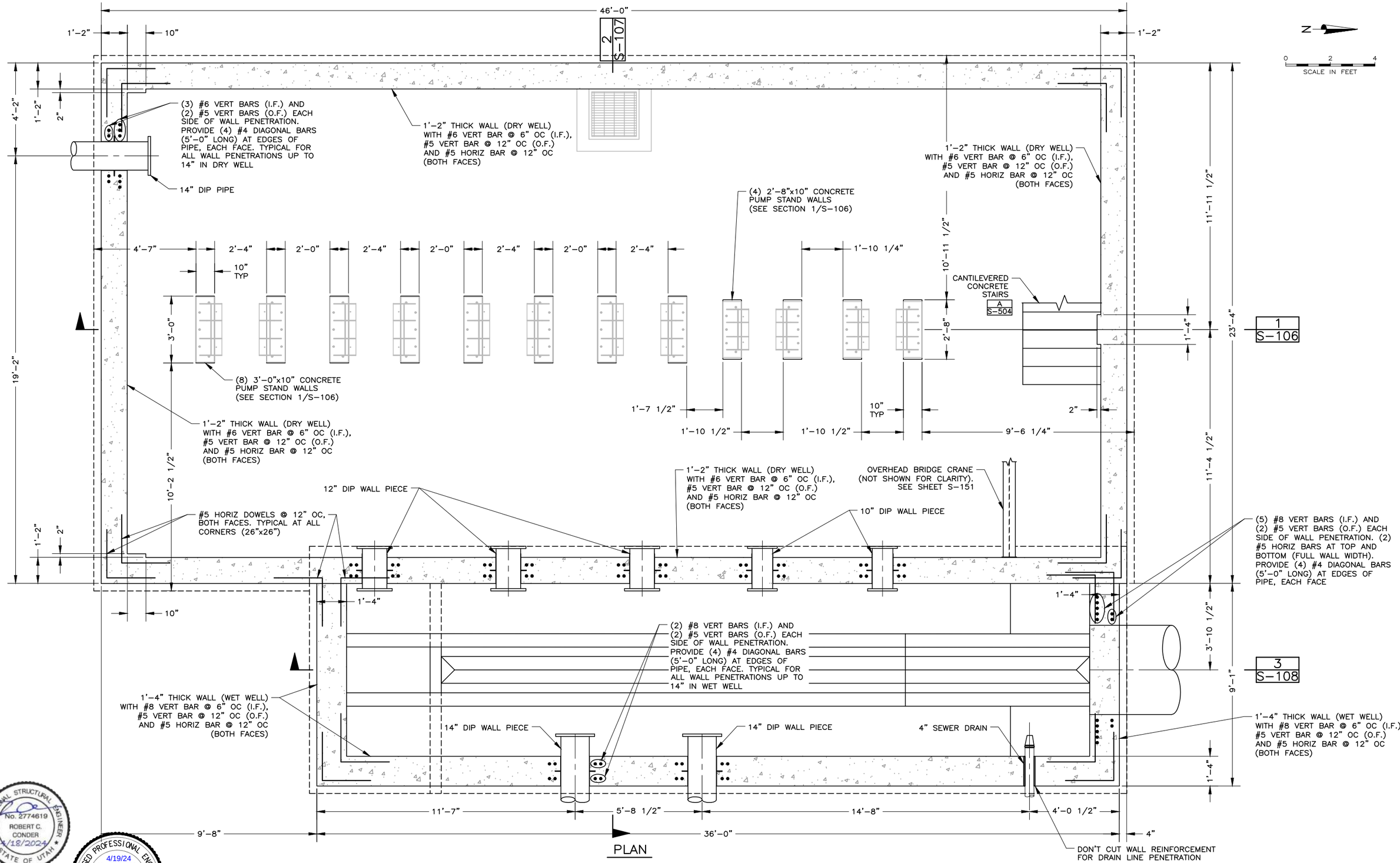


PLAN

FILE NAME: PROJECTS\126 - SOUTH SALT LAKE CITY\42.200 - ZELLER AND DOWNTOWN SEWER IMPROVEMENTS\CAD\2 - DOWNTOWN AND PUMP STATION\S-103 PUMPHOUSE FOUNDATION WALL PLAN.DWG
FILE DATE: 4.15.2024 16:40:50 (MAJ)

PROFESSIONAL STRUCTURAL ENGINEER No. 2774619 ROBERT C. CONDER 4/18/2024 STATE OF UTAH

LICENSED PROFESSIONAL ENGINEER 4/19/24 No. 5052482 GREGORY S. THOMAS STATE OF UTAH

HANSEN ALLEN & LUCE INC ENGINEERS

| | | | | | | |
|---|---|---|---|---|---|---|
| DESIGNED ACS | 3 | | | | | |
| DRAFTED MAJ | 2 | | | | | |
| CHECKED GST | 1 | | | | | |
| DATE APRIL 2024 | NO. | DATE | REVISIONS | BY | APVD. | |

SCALE AS SHOWN

SOUTH SALT LAKE

DOWNTOWN SEWER IMPROVEMENTS AND PUMP STATION
STRUCTURAL
PUMPHOUSE FOUNDATION WALL PLAN

SHEET S-103
126.42.300

7/04

FILE NAME: PROJECTS\126 – SOUTH SALT LAKE CITY\42.200 – ZELLER AND DOWNTOWN SEWER IMPROVEMENTS\CAD\2 – DOWNTOWN AND PUMP STATION\S-104 PUMPHOUSE FLOOR SLAB & STEM WALL PLAN.DWG
FILE DATE: 3.15.2024, 14:14:30 (MAJ)

46'-0"

(4) #6 CROSSWISE BARS @ 2" OC (BOTTOM) & (2) #5 CROSSWISE BARS @ 2" OC (TOP), TYP AT SIDES OF ALL PUMP OPENINGS IN DRY WELL, UNO

(5) #6 CROSSWISE BARS @ 2" OC (BOTTOM) & (3) #5 CROSSWISE BARS @ 2" OC (TOP)

2/S-107

(10) #6 CROSSWISE BARS @ 2" OC (BOTTOM) & (4) #5 CROSSWISE BARS EQUALLY SPACED (TOP)

(2) #6 CROSSWISE BARS @ 2" OC (BOTTOM) & (2) #5 CROSSWISE BARS @ 2" OC (TOP)

(5) #6 CROSSWISE BARS @ 2" OC (BOTTOM) & (3) #5 CROSSWISE BARS EQUALLY SPACED (TOP)

N

0 1 2
SCALE IN FEET

STEM WALL, TYP (SEE SHEET S-106 FOR DIMENSIONS)

#5 BARS @ 12" OC (TOP & BOTTOM) LENGTHWISE BARS, TYP IN DRY WELL

(1) #5 BAR (TOP & BOTTOM) AT EDGE OF OPENING

3'-6"

OPEN

CONCRETE SHELF PER SECTIONS ON S-106 & S-107

EDGE OF SLAB

#6 BARS @ 6" OC (BOTTOM) AND #5 BARS @ 12" OC (TOP), CROSSWISE BARS, TYP IN DRY WELL

12'-0"

5'-8"

(4) #6 BARS @ 2" OC (BOTTOM) & (2) #5 BARS @ 2" OC (TOP), FULL LENGTH OF BUILDING

BLOCKOUT FOR DOORWAY (TYP) (NOTE: HOLD BLOCKOUT FOR DOORWAY DOWN TO ALLOW FOR SLAB TO POUR THROUGH OPENING)

1'-2"

3'-4 1/2" | 3'-6" | 2'-6" | 3'-6" | 2'-6" | 3'-6" | 2'-6" | 3'-6" | 1'-10 1/2" | 3'-6" | 1'-10 1/2" | 3'-6" | 8'-0 1/2"

(2) #6 BARS @ 2" OC (BOTTOM) & (1) #5 BARS @ 2" OC (TOP), FULL LENGTH OF BUILDING

(1) #6 BAR (BOTTOM) & (1) #5 BAR (TOP) AT EDGE OF OPENING (PARTIAL LENGTH OF BUILDING)

1
S-106

OPEN

10'-5 1/2"

3'-0"

9'-10 1/2"

10" DIP PIPE PENETRATION

(2) #4 DIAG BARS (3'-6" LONG) @ 2" CLR FROM PIPE TOP AND BOTTOM OF SLAB

8'-7"

CONTRACTOR TO BEND BARS AROUND PIPE PENETRATION (DO NOT CUT)

#4 DIAG BAR (5'-0" LONG), TOP AND BOTTOM AT ALL CORNERS OF OPENINGS. BEND AS REQUIRED

(2) #6 BARS @ 2" OC (BOTTOM) & (1) #5 BARS @ 2" OC (TOP), FULL LENGTH OF BUILDING

CONCRETE SHELF PER SECTIONS ON S-106 & S-107

1'-10 1/2"

(2) #5 BARS (2'-5" LONG)

10"

#4 DIAG BARS (3'-0" LONG) @ 2" CLR FROM PIPE TOP AND BOTTOM OF SLAB

EDGE OF SLAB, TYP

SEE SHEET S-105 FOR HOUSEKEEPING PADS

STEM WALL, TYP (SEE SHEET S-106 FOR DIMENSIONS)

10'-8 1/2"

10'-1 1/2"

2'-6"

23'-4"

(2) #5 BARS (10'-0" LONG)

7'-4" | 4'-8"

6"

#5 BARS @ 12" OC (TOP & BOTTOM) EACH WAY, TYP IN WET WELL

STEM WALL OVER SLAB (SEE SECTION 2/S-107)

2'-4 1/2"

3'-0"

9'-1"

3'-8 1/2"

(2) #6 BARS (15'-0" LONG) @ 2" OC (BOTTOM) AND (1) #5 BAR (15'-0" LONG) @ 2" OC (TOP)

GOOSENECK AIR VENT PENETRATION (SEE DETAIL A/C-502)

6"

OPEN

GOOSENECK AIR VENT COLLAR (SEE DETAIL H/S-507)

3
S-108

(3) #6 BARS (28'-0" LONG) @ 2" OC (BOTTOM) AND (2) #5 BARS (28'-0" LONG) @ 2" OC (TOP)

B
S-510 PUMPHOUSE WALL PIPE PENETRATION

(2) #5 CROSSWISE BARS @ 2" OC (BOTTOM) AND (1) #5 CROSSWISE BAR @ 2" OC (TOP), TYP AT SIDES OF ALL OPENINGS IN WET WELL, UNO

(2) #5 LENGTHWISE BARS @ 2" OC (BOTTOM) AND (1) #5 LENGTHWISE BAR @ 2" OC (TOP), TYP AT BOTH SIDES OF OPENINGS IN WET WELL, UNO

#4 DIAG BAR (5'-0" LONG), TOP AND BOTTOM AT ALL CORNERS OF OPENINGS. BEND AS REQUIRED

EDGE OF SLAB

1'-4" | 7'-0" | 1'-9" | 3'-0" | 2'-8" | 3'-0" | 11" | 6'-0" | 6'-0" | 3'-0" | 1'-4"

9'-8" | 36'-0" | 4"

GENERAL SHEET NOTES:
1. ALL CROSSWISE BARS TO BE LOCATED BELOW LENGTHWISE BARS, UNO.

PROFESSIONAL STRUCTURAL ENGINEER
No. 2774619
ROBERT C. CONDER
4/18/2024
STATE OF UTAH

LICENSED PROFESSIONAL ENGINEER
4/19/24
No. 5052482
GREGORY S. THOMAS
STATE OF UTAH

HANSEN ALLEN & LUCE inc
ENGINEERS

| | | | | | |
|---|---|---|---|---|---|
| DESIGNED | ACS | 3 | | | |
| DRAFTED | MAJ | 2 | | | |
| CHECKED | GST | 1 | | | |
| DATE | APRIL 2024 | NO. | DATE | REVISIONS | BY APVD. |

SCALE: AS SHOWN

SOUTH SALT LAKE

DOWNTOWN SEWER IMPROVEMENTS AND PUMP STATION
STRUCTURAL
PUMPHOUSE FLOOR SLAB & STEM WALL PLAN

SHEET S-104

126.42.300

7/04

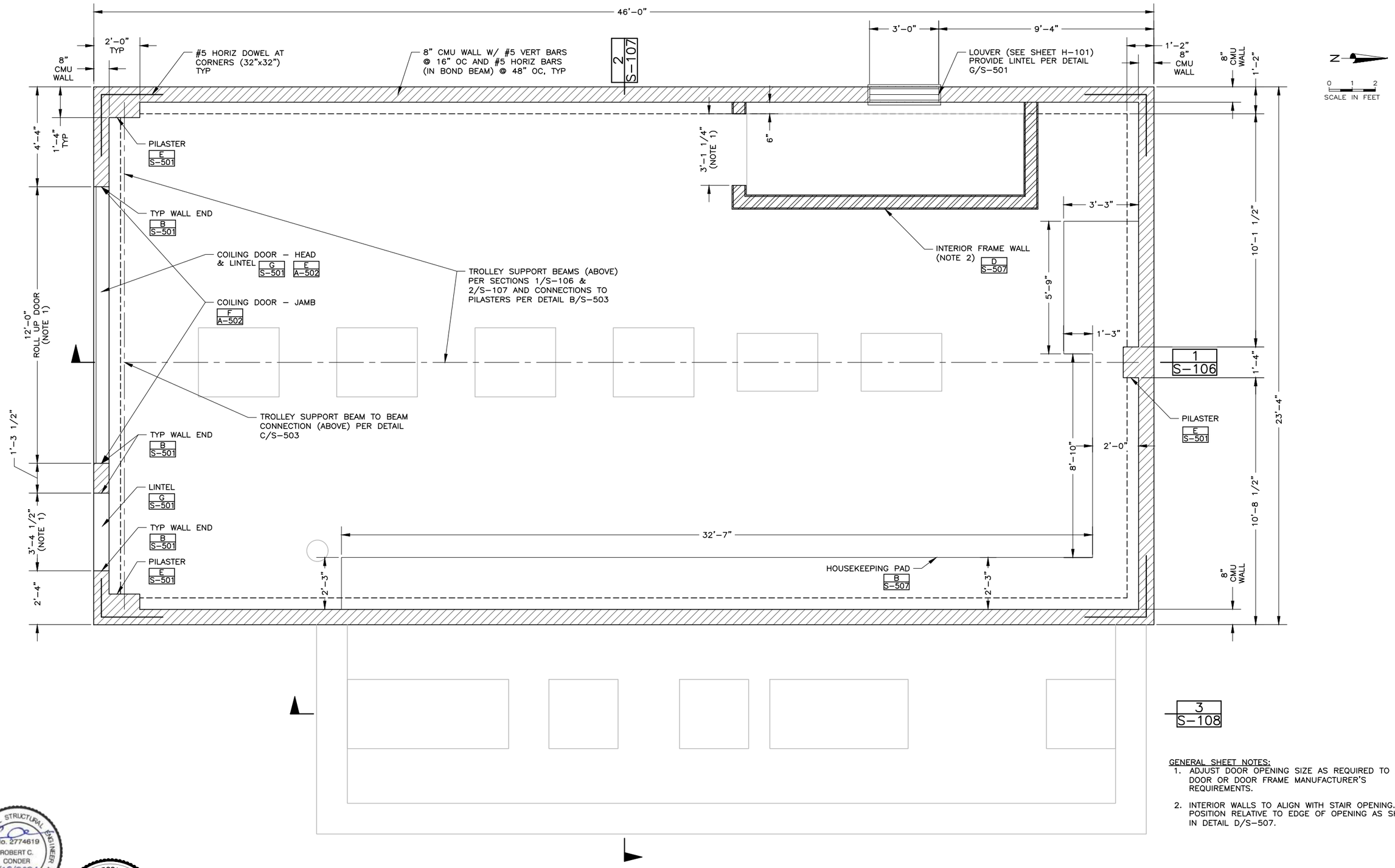


GENERAL SHEET NOTES:

1. ADJUST DOOR OPENING SIZE AS REQUIRED TO MEET DOOR OR DOOR FRAME MANUFACTURER'S REQUIREMENTS.
2. INTERIOR WALLS TO ALIGN WITH STAIR OPENING. POSITION RELATIVE TO EDGE OF OPENING AS SHOWN IN DETAIL D/S-507.

PROFESSIONAL STRUCTURAL ENGINEER
No. 2774619
ROBERT C. CONDER
4/18/2024
STATE OF UTAH

LICENSED PROFESSIONAL ENGINEER
4/19/24
No. 5052482
GREGORY S. TUCKETT
STATE OF UTAH

HANSEN ALLEN & LUCE Inc
ENGINEERS

| | | | | | | |
|---|---|---|---|---|---|---|
| DESIGNED | ACS | 3 | | | | |
| DRAFTED | MAJ | 2 | | | | |
| CHECKED | GST | 1 | | | | |
| DATE | APRIL 2024 | NO. | DATE | REVISIONS | BY | APVD. |

SCALE: AS SHOWN

SOUTH SALT LAKE

DOWNTOWN SEWER IMPROVEMENTS AND PUMP STATION
STRUCTURAL
PUMPHOUSE CMU WALL PLAN

SHEET S-105

126.42.300

FILE NAME: PROJECTS\126 - SOUTH SALT LAKE CITY\42.200 - ZELLER AND DOWNTOWN SEWER IMPROVEMENTS\CAD\2 - DOWNTOWN AND PUMP STATION\S-105 PUMPHOUSE CMU WALL PLAN.DWG
FILE DATE: 3.6.2024 14:36:45 (MAJ)

7/04

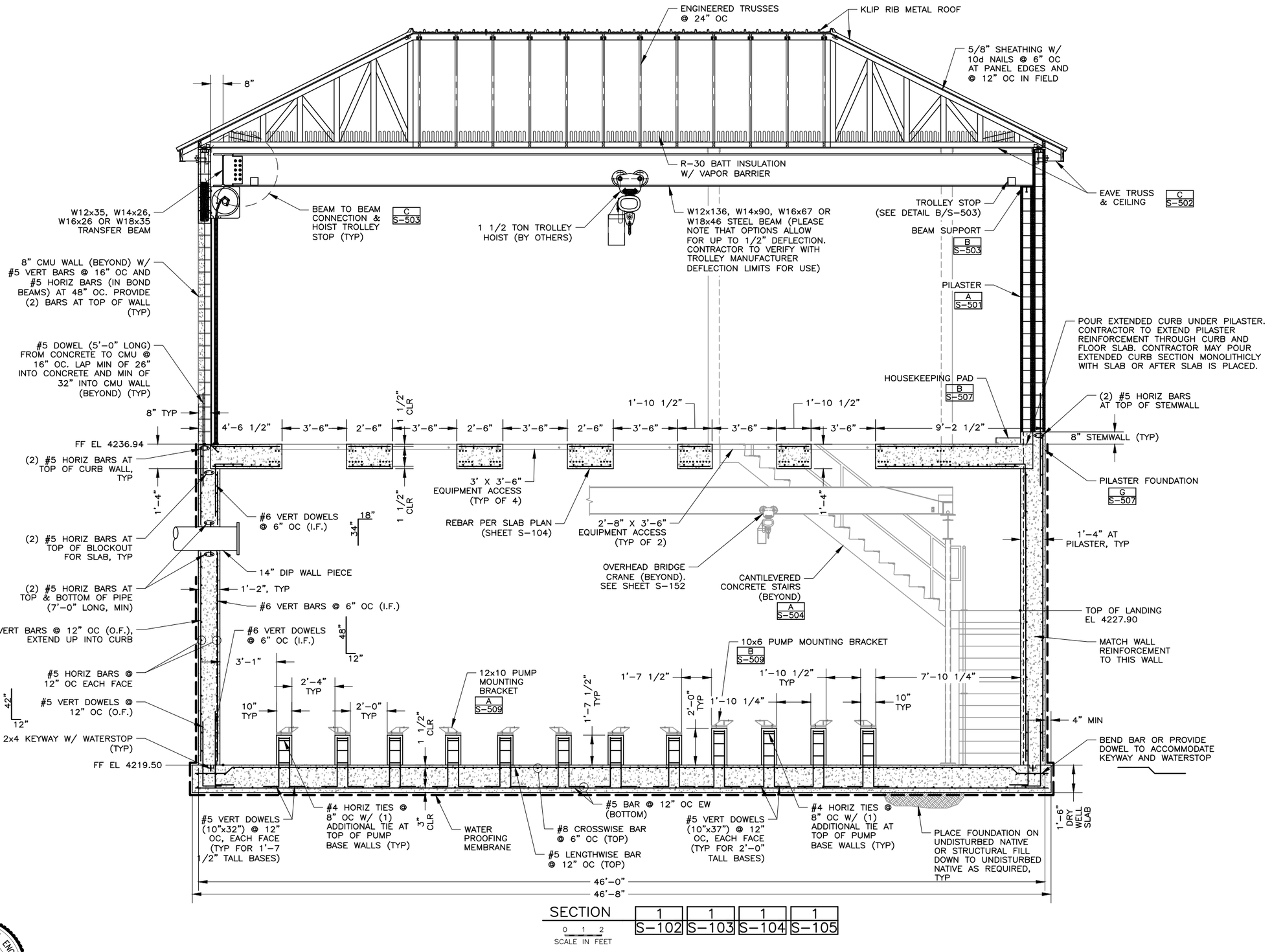


SECTION 1 S-102 | 1 S-103 | 1 S-104 | 1 S-105

0 1 2
SCALE IN FEET

FILE NAME: PROJECTS\126 - SOUTH SALT LAKE CITY\42.200 - ZELLER AND DOWNTOWN SEWER IMPROVEMENTS\CAD\2 - DOWNTOWN AND PUMP STATION\S-106 PUMPHOUSE DRY WELL SECTION.DWG
FILE DATE: 4.15.2024 16:29:07 (MAJ)

PROFESSIONAL STRUCTURAL ENGINEER
No. 2774619
ROBERT C. CONDER
4/18/2024
STATE OF UTAH

LICENSED PROFESSIONAL ENGINEER
4/19/24
No. 5052482
GREGORY S. THOMAS
STATE OF UTAH

HANSEN ALLEN & LUCE Inc ENGINEERS

| | | | | | | |
|---|---|---|---|---|---|---|
| DESIGNED | ACS | 3 | | | | |
| DRAFTED | MAJ | 2 | | | | |
| CHECKED | GST | 1 | | | | |
| DATE | APRIL 2024 | NO. | DATE | REVISIONS | BY | APVD. |

SCALE: AS SHOWN

SOUTH SALT LAKE

DOWNTOWN SEWER IMPROVEMENTS AND PUMP STATION
STRUCTURAL
PUMPHOUSE DRY WELL SECTION

SHEET S-106

126.42.300

7/04

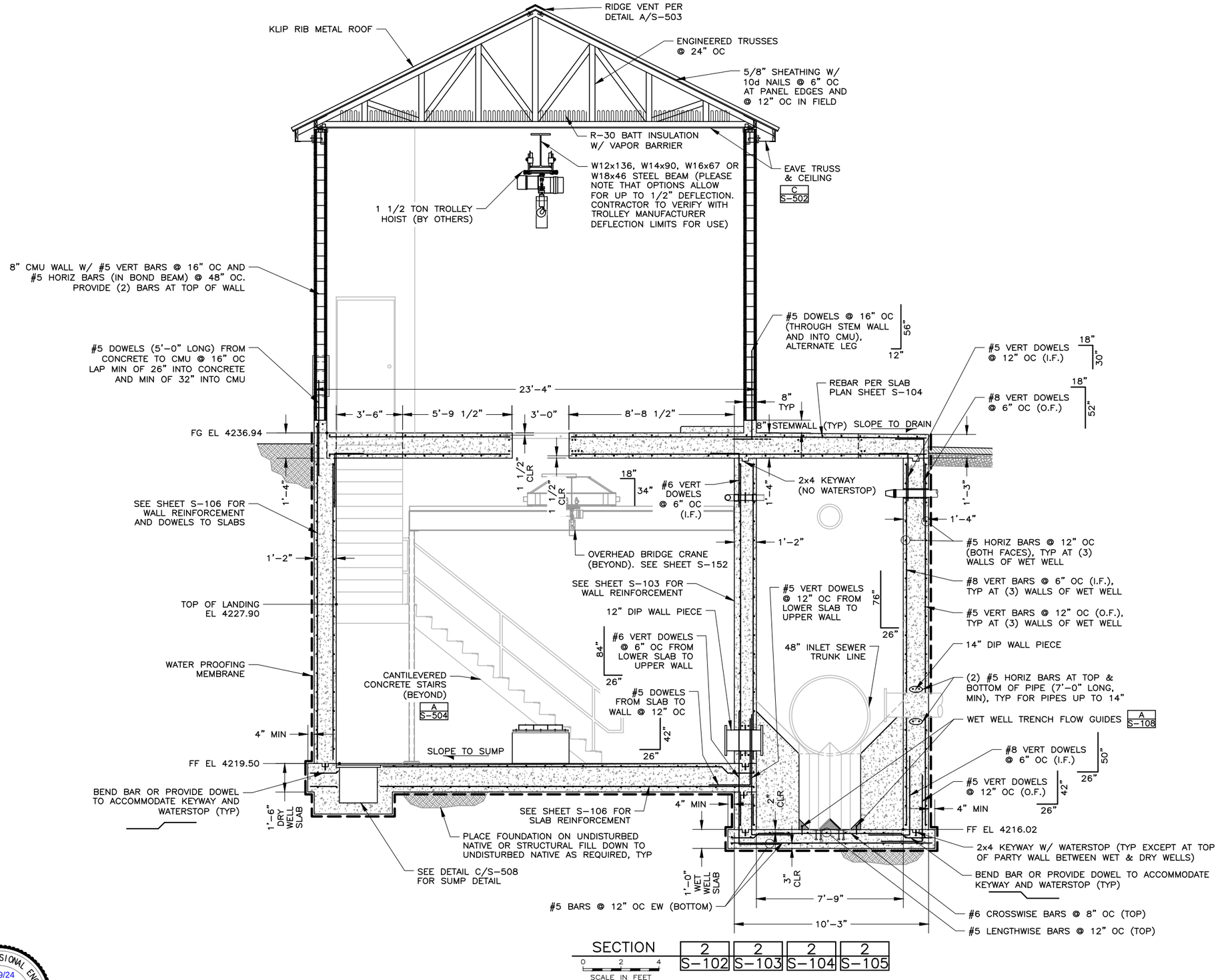


FILE NAME: PROJECTS\126 - SOUTH SALT LAKE CITY\42.200 - ZELLER AND DOWNTOWN SEWER IMPROVEMENTS\CAD\2 - DOWNTOWN AND PUMP STATION\S-107 PUMPHOUSE DRY & WET WELL SECTION.DWG
FILE DATE: 4.15.2024 16:35:34 (MAJ)

PROFESSIONAL STRUCTURAL ENGINEER
No. 2774619
ROBERT C. CONDER
4/18/2024
STATE OF UTAH

LICENSED PROFESSIONAL ENGINEER
4/19/24
No. 5052482
GREGORY S. THOMAS
STATE OF UTAH

HANSEN ALLEN & LUCE Inc
ENGINEERS

| | | | | | | |
|---|---|---|---|---|---|---|
| DESIGNED | ACS | 3 | | | | |
| DRAFTED | MAJ | 2 | | | | |
| CHECKED | GST | 1 | | | | |
| DATE | APRIL 2024 | NO. | DATE | REVISIONS | BY | APVD. |

SCALE: AS SHOWN

SOUTH SALT LAKE

DOWNTOWN SEWER IMPROVEMENTS AND PUMP STATION
STRUCTURAL
PUMPHOUSE DRY & WET WELL SECTION

SHEET S-107
126.42.300

7/04

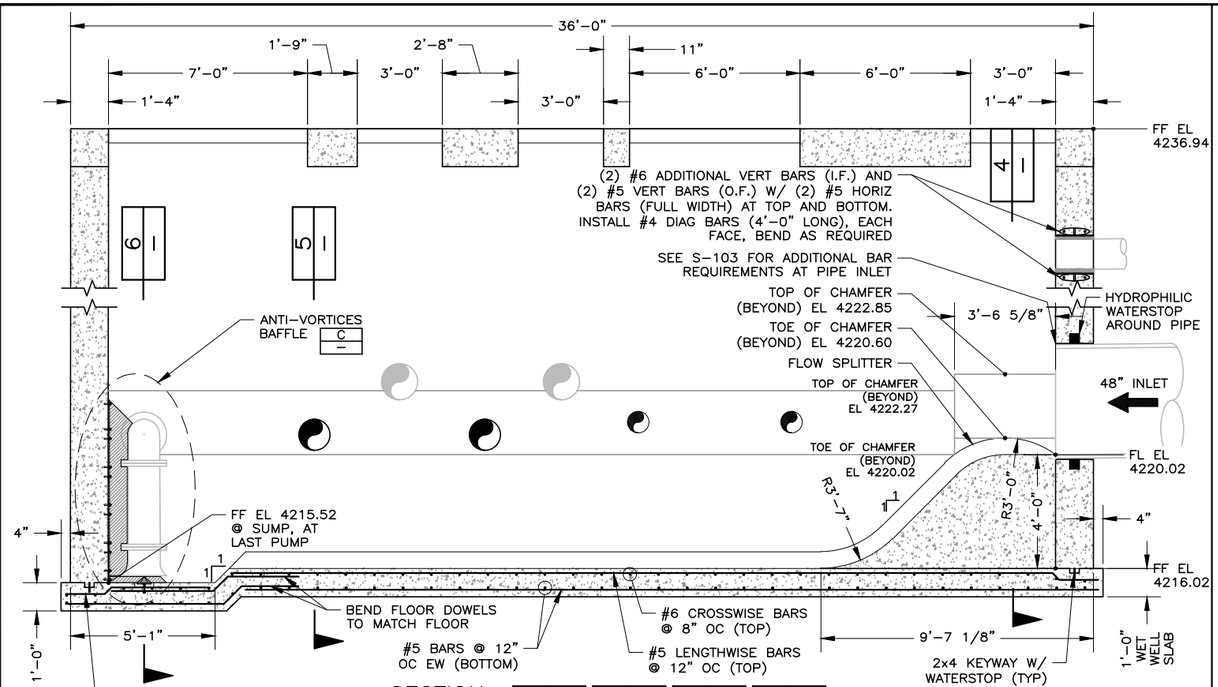


SECTION | 3 | S-102 | 3 | S-103 | 3 | S-104 | 3 | S-105

DETAIL NOTES:
1. SEE SHEETS S-102, S-103 AND S-107 FOR TYPICAL WALL AND FLOOR SLAB(S) REINFORCEMENT.

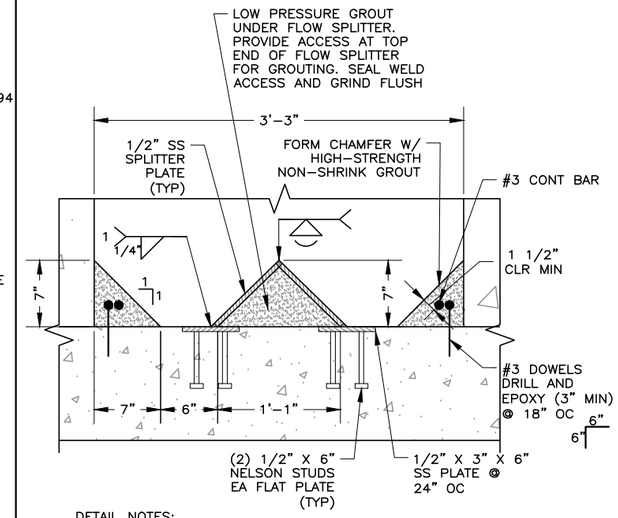


DETAIL NOTES:
1. WELD MAY BE SHOP OR FIELD WELDED DEPENDING ON WHETHER CONTRACTOR ELECTS TO INSTALL THE FLAT PLATES IN THE SLAB INDEPENDENT OF THE SPLITTER PLATES.

WET WELL TRENCH FLOW GUIDES (NTS) | A | A | — | C-107 | A | A | C-108 | S-107

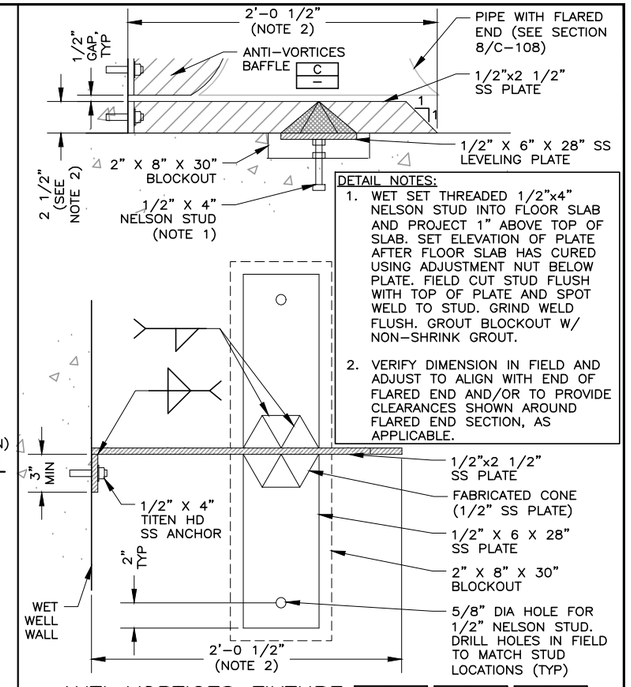


DETAIL NOTES:
1. WET SET THREADED 1/2"x4" NELSON STUD INTO FLOOR SLAB AND PROJECT 1" ABOVE TOP OF SLAB. SET ELEVATION OF PLATE AFTER FLOOR SLAB HAS CURED USING ADJUSTMENT NUT BELOW PLATE. FIELD CUT STUD FLUSH WITH TOP OF PLATE AND SPOT WELD TO STUD. GRIND WELD FLUSH. GROUT BLOCKOUT W/ NON-SHRINK GROUT.
2. VERIFY DIMENSION IN FIELD AND ADJUST TO ALIGN WITH END OF FLARED END AND/OR TO PROVIDE CLEARANCES SHOWN AROUND FLARED END SECTION, AS APPLICABLE.

ANTI-VORTICES FIXTURE (NTS) | B | B | B | — | C-105 | C-108

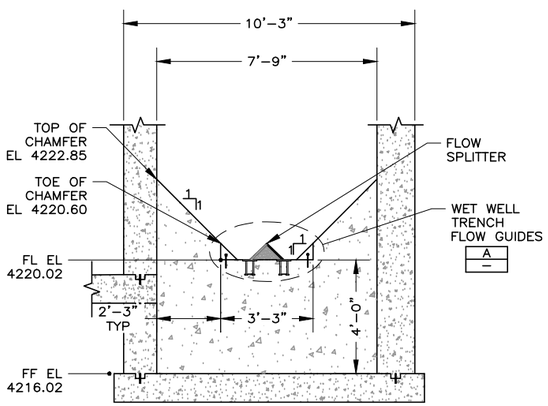


DETAIL NOTES:
1. SEE SHEETS S-102, S-103 AND S-107 FOR TYPICAL WALL AND FLOOR SLAB(S) REINFORCEMENT.

SECTION (NTS) | 4 | —

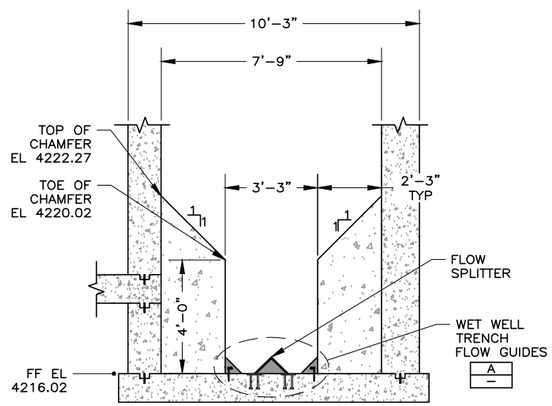


DETAIL NOTES:
1. SEE SHEETS S-102, S-103 AND S-107 FOR TYPICAL WALL AND FLOOR SLAB(S) REINFORCEMENT.

SECTION (NTS) | 5 | —

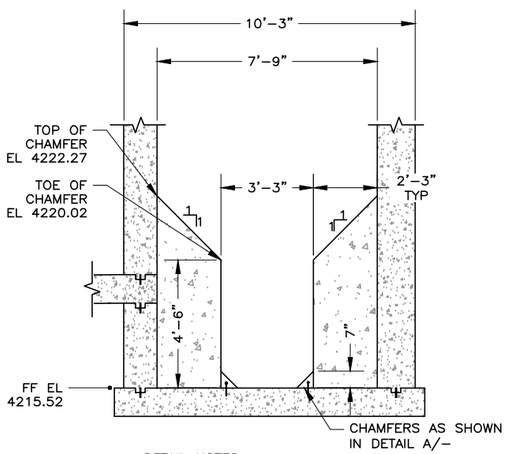


DETAIL NOTES:
1. SEE SHEETS S-102, S-103 AND S-107 FOR TYPICAL WALL AND FLOOR SLAB(S) REINFORCEMENT.

SECTION (NTS) | 6 | —

GENERAL SHEET NOTES:
1. ALL DIMENSIONS FOR METAL FABRICATION SHALL BE VERIFIED PRIOR TO MANUFACTURE. SHOP DRAWINGS SHALL BE SUBMITTED TO ENGINEER FOR APPROVAL PRIOR TO MANUFACTURING.
2. ALL STAINLESS STEEL SHALL BE TYPE 316.
3. SEE SHEET C-111 FOR PUMPHOUSE PIPE, FITTING AND EQUIPMENT SCHEDULE.

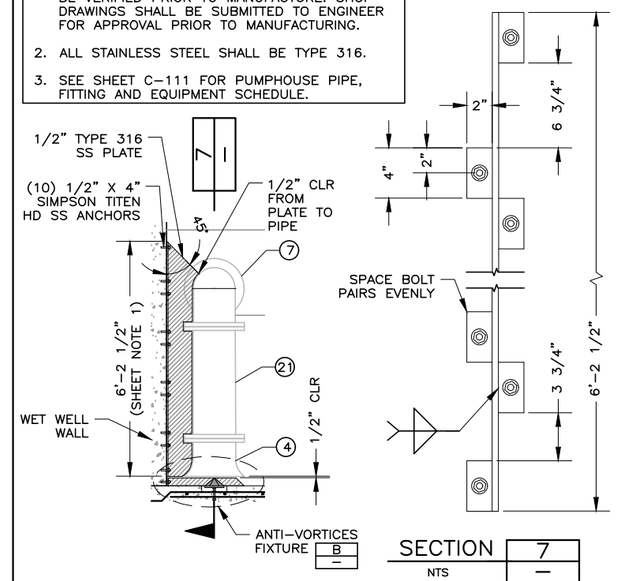


SECTION (NTS) | 7 | —

ANTI-VORTICES BAFFLE (NTS) | C | C | C | — | C-105 | C-108

PROFESSIONAL STRUCTURAL ENGINEER
No. 2774619
ROBERT C. CONDER
4/18/2024
STATE OF UTAH

LICENSED PROFESSIONAL ENGINEER
4/19/24
No. 5052482
GREGORY S. THOMAS
STATE OF UTAH

HANSEN ALLEN & LUCE Inc ENGINEERS

DESIGNED ACS | DRAFTED MAJ | CHECKED GST | DATE APRIL 2024

| NO. | DATE | REVISIONS | BY | APVD. |
|---|---|---|---|---|
| 3 | | | | |
| 2 | | | | |
| 1 | | | | |

SCALE AS SHOWN

SOUTH SALT LAKE

DOWNTOWN SEWER IMPROVEMENTS AND PUMP STATION
STRUCTURAL
PUMPHOUSE WET WELL SECTIONS & DETAILS

SHEET S-108

126.42.300

FILE NAME: PROJECTS\126 - SOUTH SALT LAKE CITY\42.200 - ZELLER AND DOWNTOWN SEWER IMPROVEMENTS\CAD\2 - DOWNTOWN AND PUMP STATION\S-108 PUMPHOUSE WET WELL SECTIONS & DETAILS.DWG
FILE DATE: 3.15.2024 14:24:04 (MAJ)

7/04

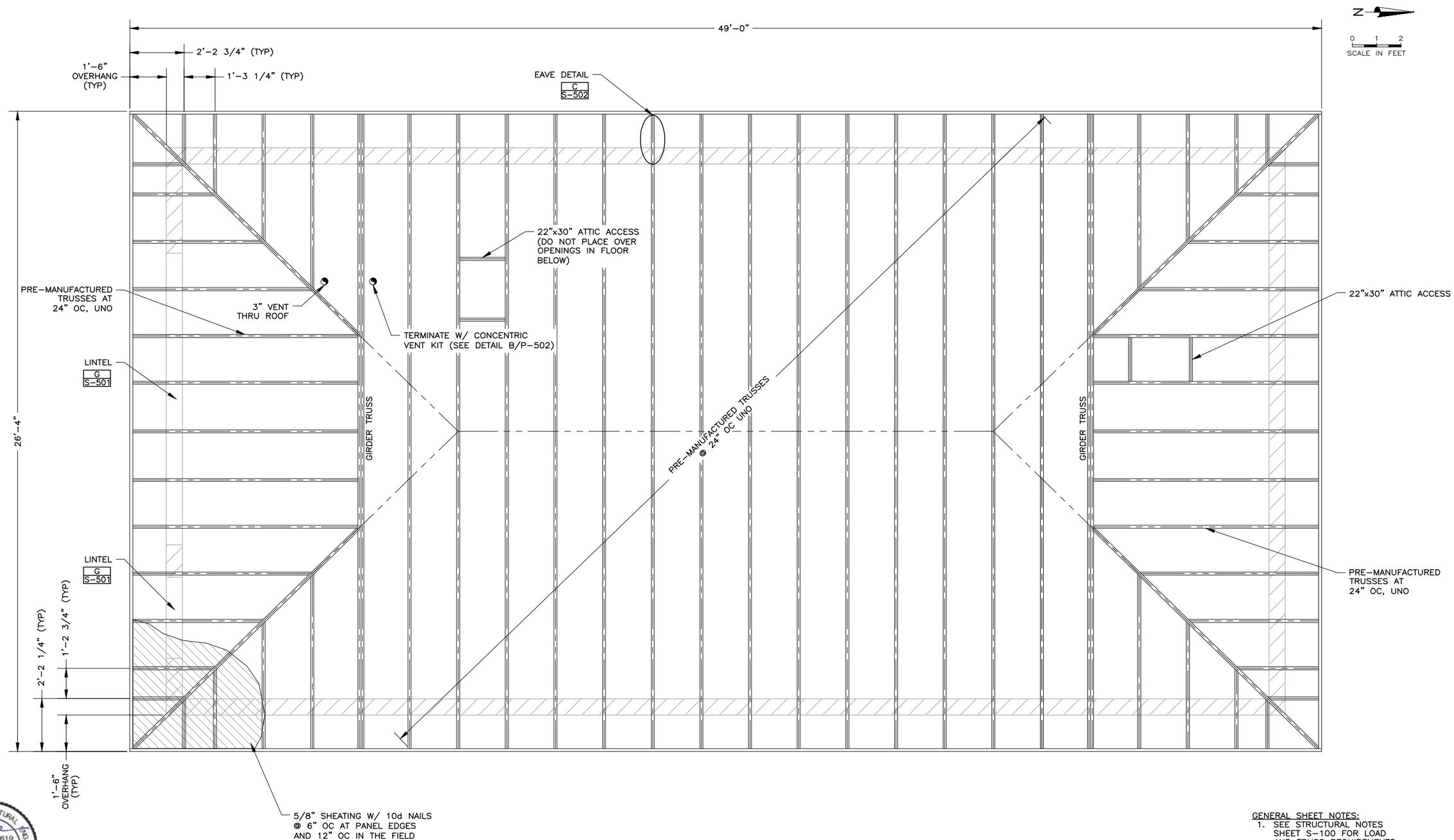


GENERAL SHEET NOTES:
1. SEE STRUCTURAL NOTES SHEET S-100 FOR LOAD AND TRUSS REQUIREMENTS.

PROFESSIONAL STRUCTURAL ENGINEER No. 2774619 ROBERT C. CONDER 4/18/2024 STATE OF UTAH

LICENSED PROFESSIONAL ENGINEER 4/19/24 No. 5052482 GREGORY S. THOMAS STATE OF UTAH

HANSEN ALLEN & LUCE INC ENGINEERS

| | | | | | | | |
|---|---|---|---|---|---|---|---|
| DESIGNED | ACS | 3 | | | | | |
| DRAFTED | MAJ | 2 | | | | | |
| CHECKED | GST | 1 | | | | | |
| DATE | APRIL 2024 | NO. | DATE | REVISIONS | BY | APVD. | |

SCALE AS SHOWN

SOUTH SALT LAKE

DOWNTOWN SEWER IMPROVEMENTS AND PUMP STATION
STRUCTURAL
PUMPHOUSE ROOFING PLAN

SHEET S-109

126.42.300

FILE NAME: PROJECTS\126 - SOUTH SALT LAKE CITY\42.200 - ZELLER AND DOWNTOWN SEWER IMPROVEMENTS\CAD\2 - DOWNTOWN AND PUMP STATION\S-109 PUMPHOUSE ROOFING PLAN.DWG
FILE DATE: 3.6.2024 14:42:02 (MAJ)

7/04

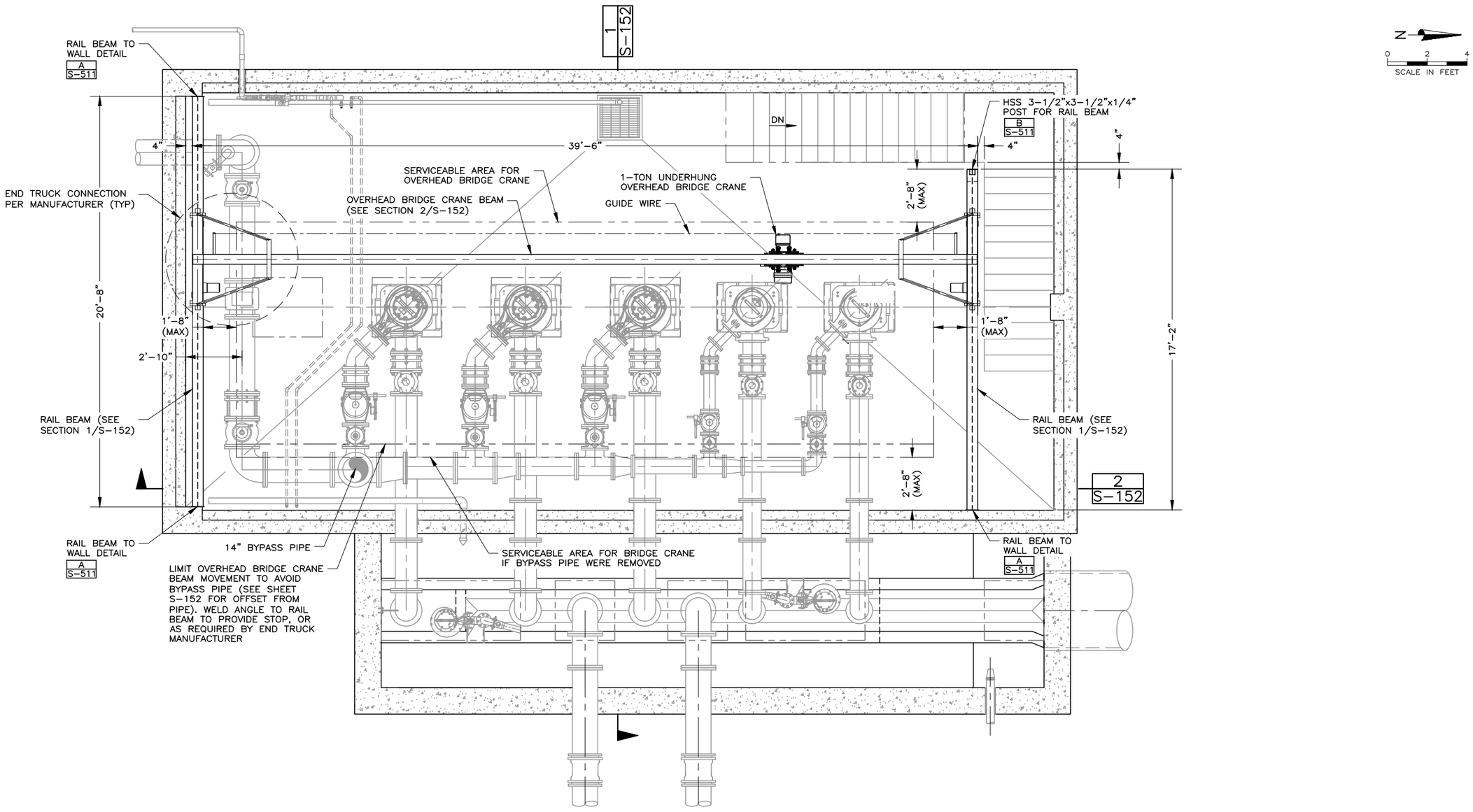


PLAN

FILE NAME: PROJECTS\126 - SOUTH SALT LAKE CITY\42.200 - ZELLER AND DOWNTOWN SEWER IMPROVEMENTS\CAD\2 - DOWNTOWN AND PUMP STATION\S-151 PUMPHOUSE DRY WELL CRANE PLAN.DWG
FILE DATE: 4.17.2024 08:37:03 (MAJ)

PROFESSIONAL STRUCTURAL ENGINEER
No. 2774619
ROBERT C. CONDER
4/18/2024
STATE OF UTAH

LICENSED PROFESSIONAL ENGINEER
4/19/24
No. 5052482
GREGORY S. THOMAS
STATE OF UTAH

HANSEN ALLEN & LUCE inc
ENGINEERS

| | | | | | | |
|---|---|---|---|---|---|---|
| DESIGNED | ACS | 3 | | | | |
| DRAFTED | BKC, MAJ | 2 | | | | |
| CHECKED | GST | 1 | | | | |
| DATE | APRIL 2024 | NO. | DATE | REVISIONS | BY | APVD. |

SCALE: AS SHOWN

SOUTH SALT LAKE

DOWNTOWN SEWER IMPROVEMENTS AND PUMP STATION
STRUCTURAL
PUMPHOUSE DRY WELL CRANE PLAN

SHEET S-151
126.42.300

7/04

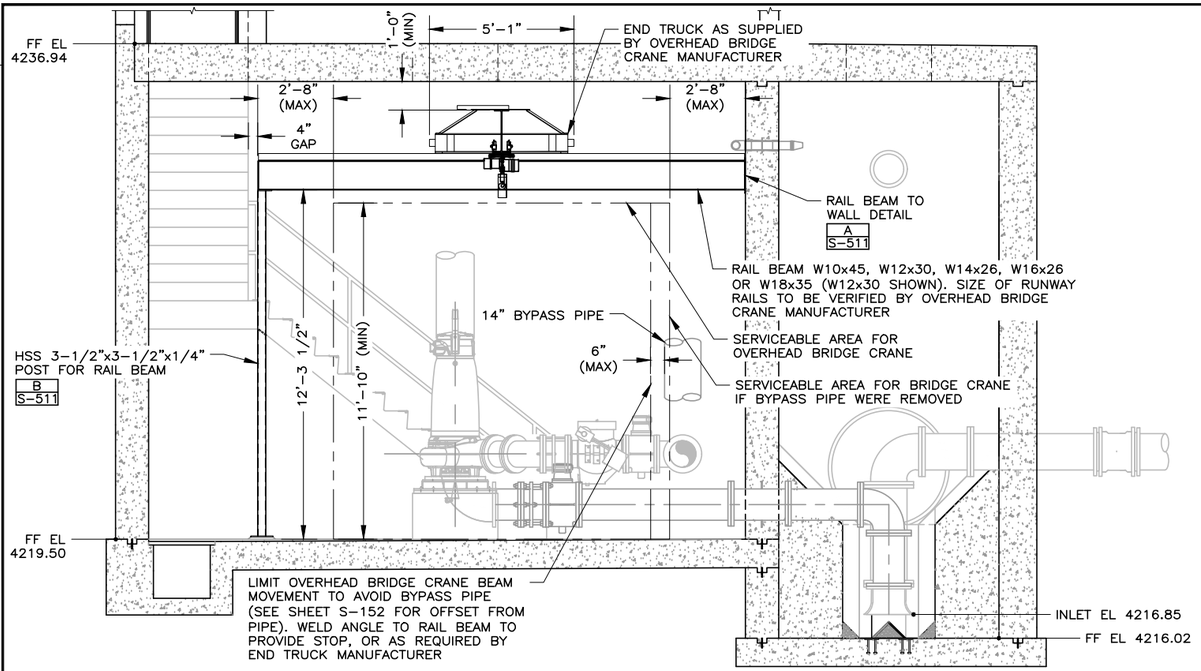


SECTION 1 S-151

0 2 4
SCALE IN FEET

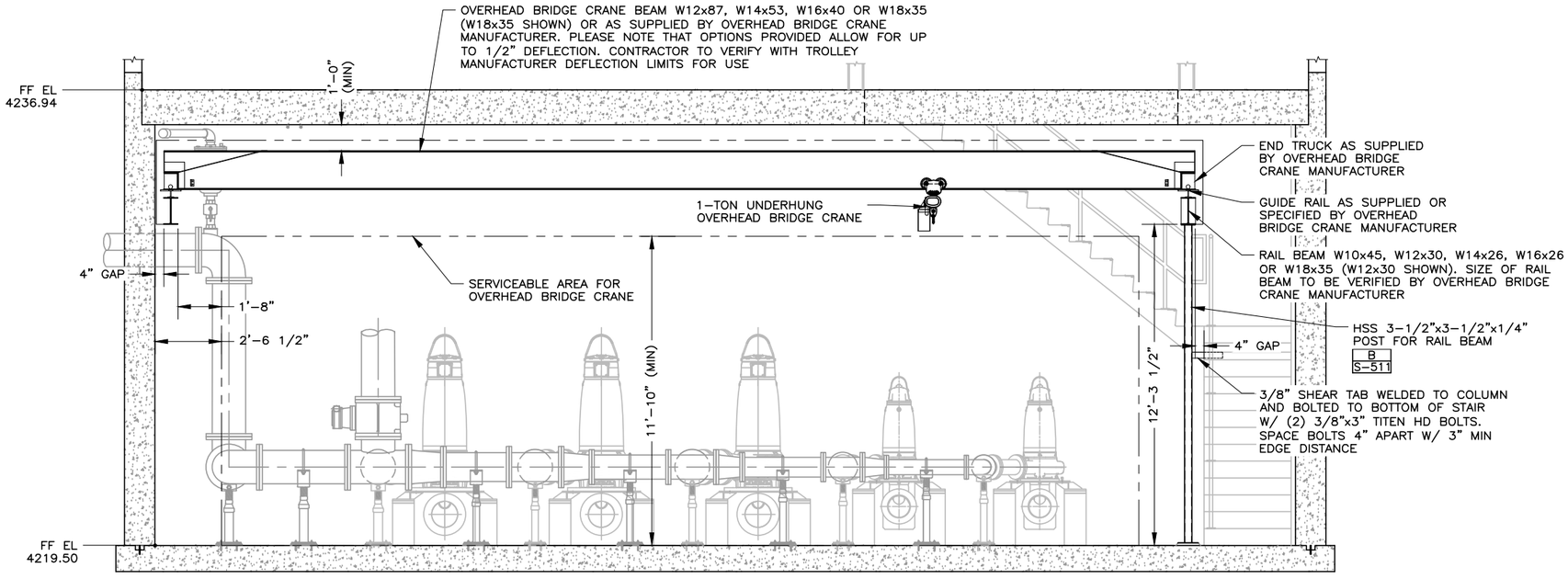


SECTION 2 S-151

0 2 4
SCALE IN FEET


LICENSED PROFESSIONAL ENGINEER
4/19/24
No. 5052482
GREGORY S. THOMAS
REGISTERED PROFESSIONAL ENGINEER



PROFESSIONAL STRUCTURAL ENGINEER
No. 2774619
ROBERT C. CONDER
4/18/2024
STATE OF UTAH


HANSEN ALLEN & LUCE, Inc. ENGINEERS

| | | | | | | | |
|---|---|---|---|---|---|---|---|
| DESIGNED | ACS | 3 | | | | | |
| DRAFTED | BKC, MAJ | 2 | | | | | |
| CHECKED | GST | 1 | | | | | |
| DATE | APRIL 2024 | NO. | DATE | REVISIONS | BY | APVD. | |

SCALE AS SHOWN

SOUTH SALT LAKE

DOWNTOWN SEWER IMPROVEMENTS AND PUMP STATION
STRUCTURAL
PUMPHOUSE DRY WELL CRANE SECTIONS

SHEET S-152

126.42.300


FILE NAME: PROJECTS\126 - SOUTH SALT LAKE CITY\42.200 - ZELLER AND DOWNTOWN SEWER IMPROVEMENTS\CAD\2 - S-152 PUMPHOUSE DRY WELL CRANE SECTIONS.DWG
FILE DATE: 4/17/2024 08:47:50 (MAJ)


7/04

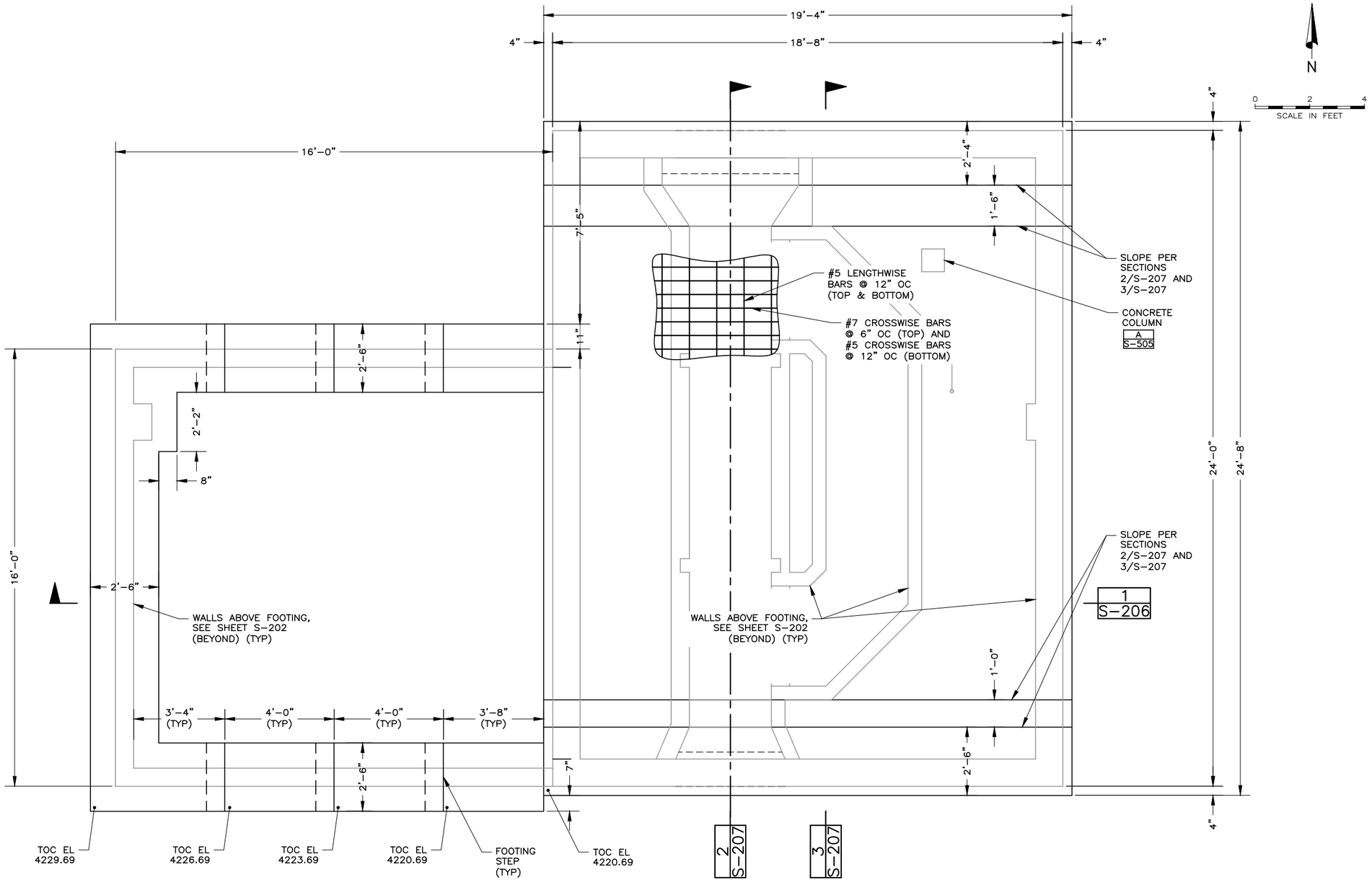


FILE NAME: PROJECTS\126 – SOUTH SALT LAKE CITY\42.200 – ZELLER AND DOWNTOWN SEWER IMPROVEMENTS\CAD\2 – DOWNTOWN AND PUMP STATION\S–201 SCREEN BUILDING FOOTING & SLAB PLAN.DWG
FILE DATE: 3.6.2024 14:44:07 (MAJ)

PROFESSIONAL STRUCTURAL ENGINEER
No. 2774619
ROBERT C. CONDER
4/18/2024
STATE OF UTAH

LICENSED PROFESSIONAL ENGINEER
4/19/24
No. 5052482
GREGORY S. TWEEDIE
STATE OF UTAH

HANSEN ALLEN & LUCE Inc
ENGINEERS

| | | | | | | |
|---|---|---|---|---|---|---|
| DESIGNED | ACS | 3 | | | | |
| DRAFTED | MAJ | 2 | | | | |
| CHECKED | GST | 1 | | | | |
| DATE | APRIL 2024 | NO. | DATE | REVISIONS | BY | APVD. |

SCALE: AS SHOWN

SOUTH SALT LAKE

DOWNTOWN SEWER IMPROVEMENTS AND PUMP STATION
STRUCTURAL
SCREEN BUILDING FOOTING & SLAB PLAN

SHEET S–201
126.42.300

7/04

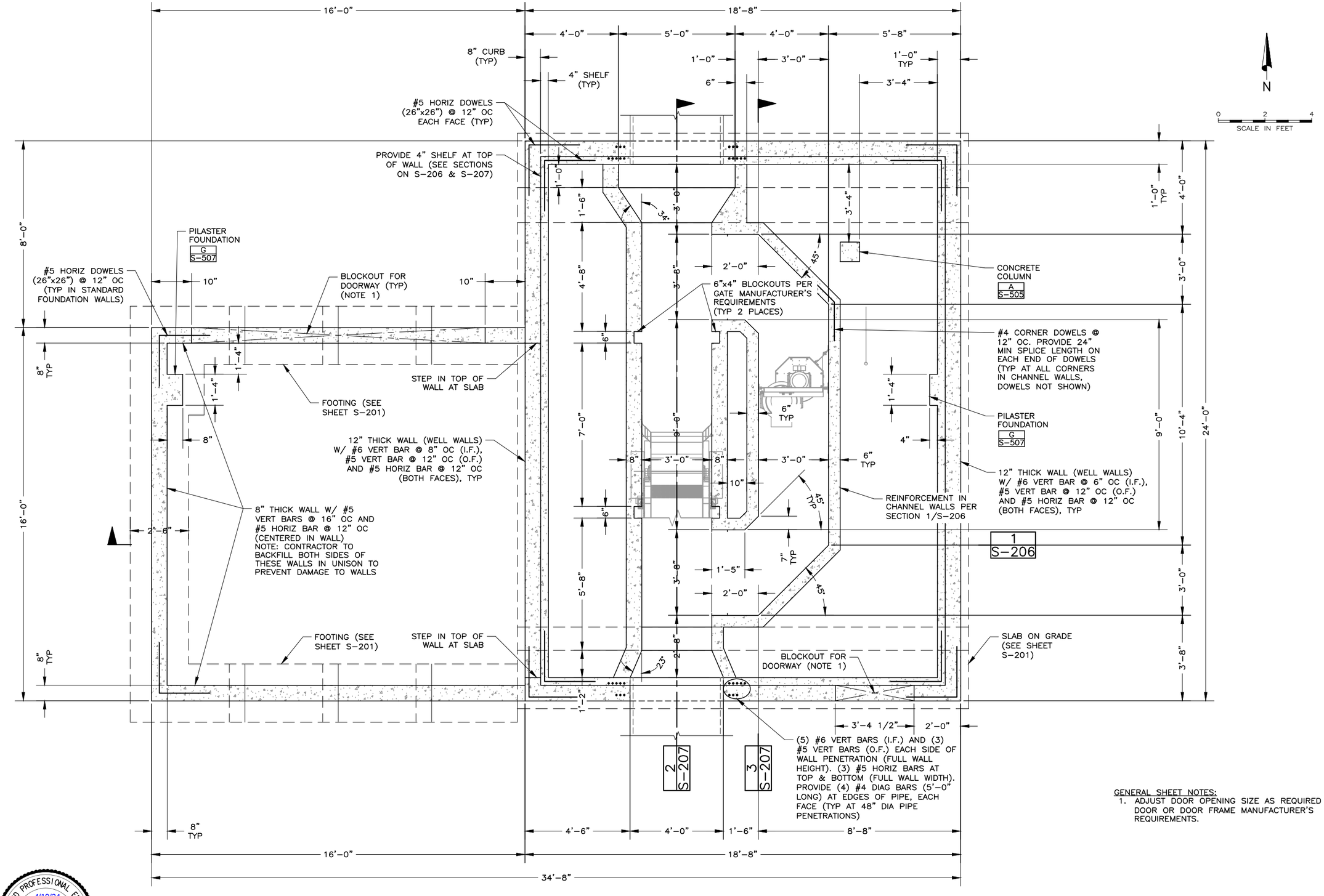


GENERAL SHEET NOTES:

1. ADJUST DOOR OPENING SIZE AS REQUIRED TO MEET DOOR OR DOOR FRAME MANUFACTURER'S REQUIREMENTS.

PROFESSIONAL STRUCTURAL ENGINEER
No. 2774619
ROBERT C. CONDER
4/18/2024
STATE OF UTAH

LICENSED PROFESSIONAL ENGINEER
4/19/24
No. 5052482
GREGORY S. THOMAS
STATE OF UTAH

HANSEN ALLEN & LUCE Inc. ENGINEERS

| | | | | | | | |
|---|---|---|---|---|---|---|---|
| DESIGNED | ACS | 3 | | | | | |
| DRAFTED | MAJ | 2 | | | | | |
| CHECKED | GST | 1 | | | | | |
| DATE | APRIL 2024 | NO. | DATE | REVISIONS | | BY | APVD. |

SCALE: AS SHOWN

SOUTH SALT LAKE

DOWNTOWN SEWER IMPROVEMENTS AND PUMP STATION
STRUCTURAL
SCREEN BUILDING FOUNDATION WALL PLAN

SHEET S-202

126.42.300

FILE NAME: PROJECTS\126 - SOUTH SALT LAKE CITY\42.200 - ZELLER AND DOWNTOWN SEWER IMPROVEMENTS\CAD\2 - DOWN
FILE DATE: 3.6.2024 14:47:24 (MAJ)

7/04

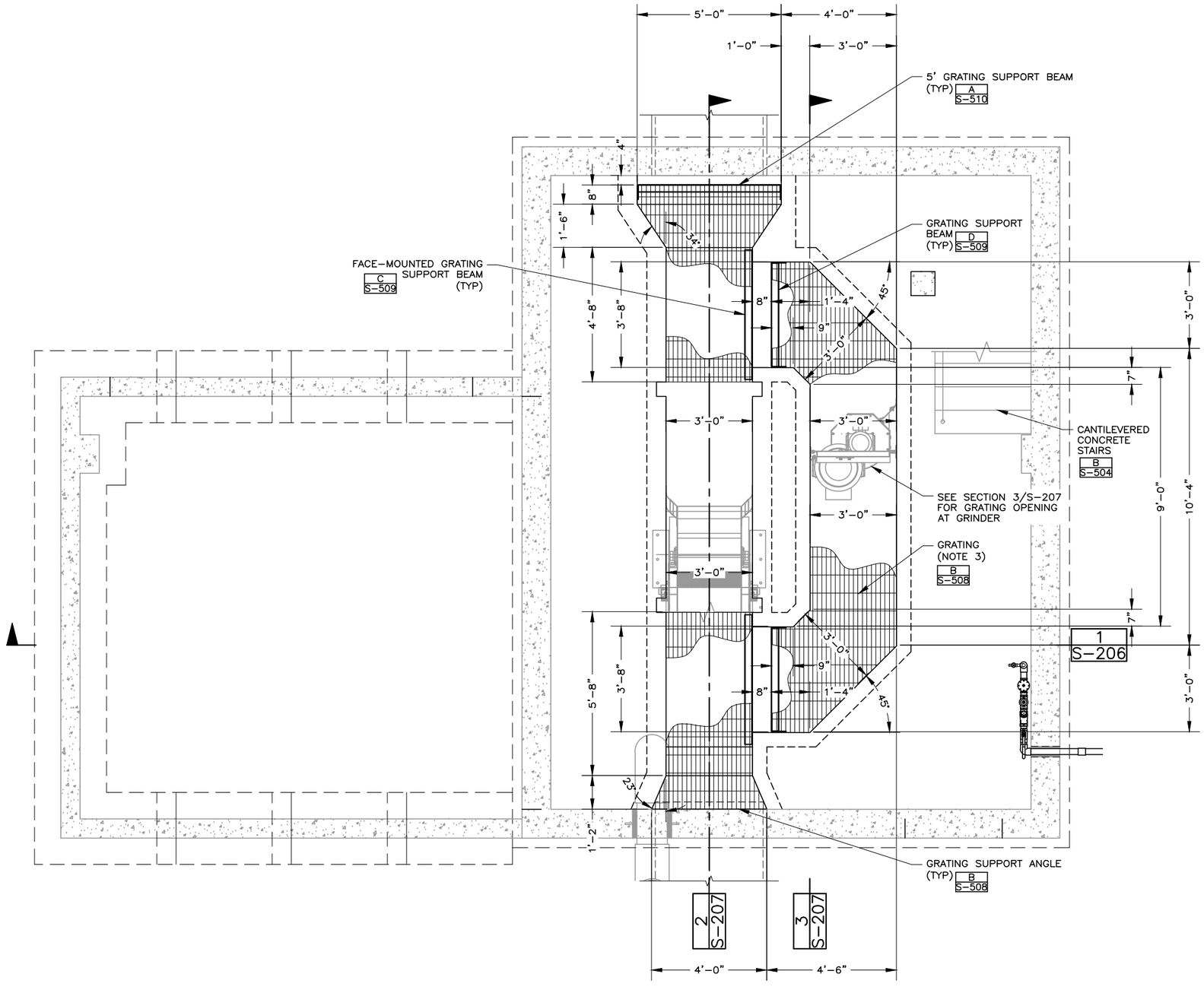


GENERAL SHEET NOTES:

1. OVERALL EXTENTS OF GRATES TO BE 1/2" LESS THAN THE DIMENSIONS STATED ABOVE TO ALLOW CLEARANCE TO INSTALL AND REMOVE THE GRATING.
2. AS-BUILT DIMENSIONS TO BE VERIFIED IN THE FIELD PRIOR TO FABRICATION OF GRATING.
3. GRATING SHALL BE FIBERGLASS REINFORCED POLYMER PER SECTION 05 50 00. GRATING DIMENSIONS TO BE FIELD MEASURED AND CUSTOM FABRICATED TO FIT.

FILE NAME: PROJECTS\126 - SOUTH SALT LAKE CITY\42.200 - ZELLER AND DOWNTOWN SEWER IMPROVEMENTS\CAD\2 - DOWNTOWN AND PUMP STATION\S-203 SCREEN BUILDING GRATING & CAP SLAB PLAN.DWG
FILE DATE: 3.6.2024 14:52:47 (MAJ)

PROFESSIONAL STRUCTURAL ENGINEER
No. 2774619
ROBERT C. CONDER
4/18/2024
STATE OF UTAH

LICENSED PROFESSIONAL ENGINEER
4/19/24
No. 5052482
GREGORY S. TWITCHELL
STATE OF UTAH

HANSEN ALLEN & LUCE inc
ENGINEERS

| | | | | | | |
|---|---|---|---|---|---|---|
| DESIGNED | ACS | 3 | | | | |
| DRAFTED | MAJ | 2 | | | | |
| CHECKED | GST | 1 | | | | |
| DATE | APRIL 2024 | NO. | DATE | REVISIONS | BY | APVD. |

SCALE: AS SHOWN

SOUTH SALT LAKE

DOWNTOWN SEWER IMPROVEMENTS AND PUMP STATION
STRUCTURAL
SCREEN BUILDING GRATING & CAP SLAB PLAN

SHEET S-203

126.42.300

7/04

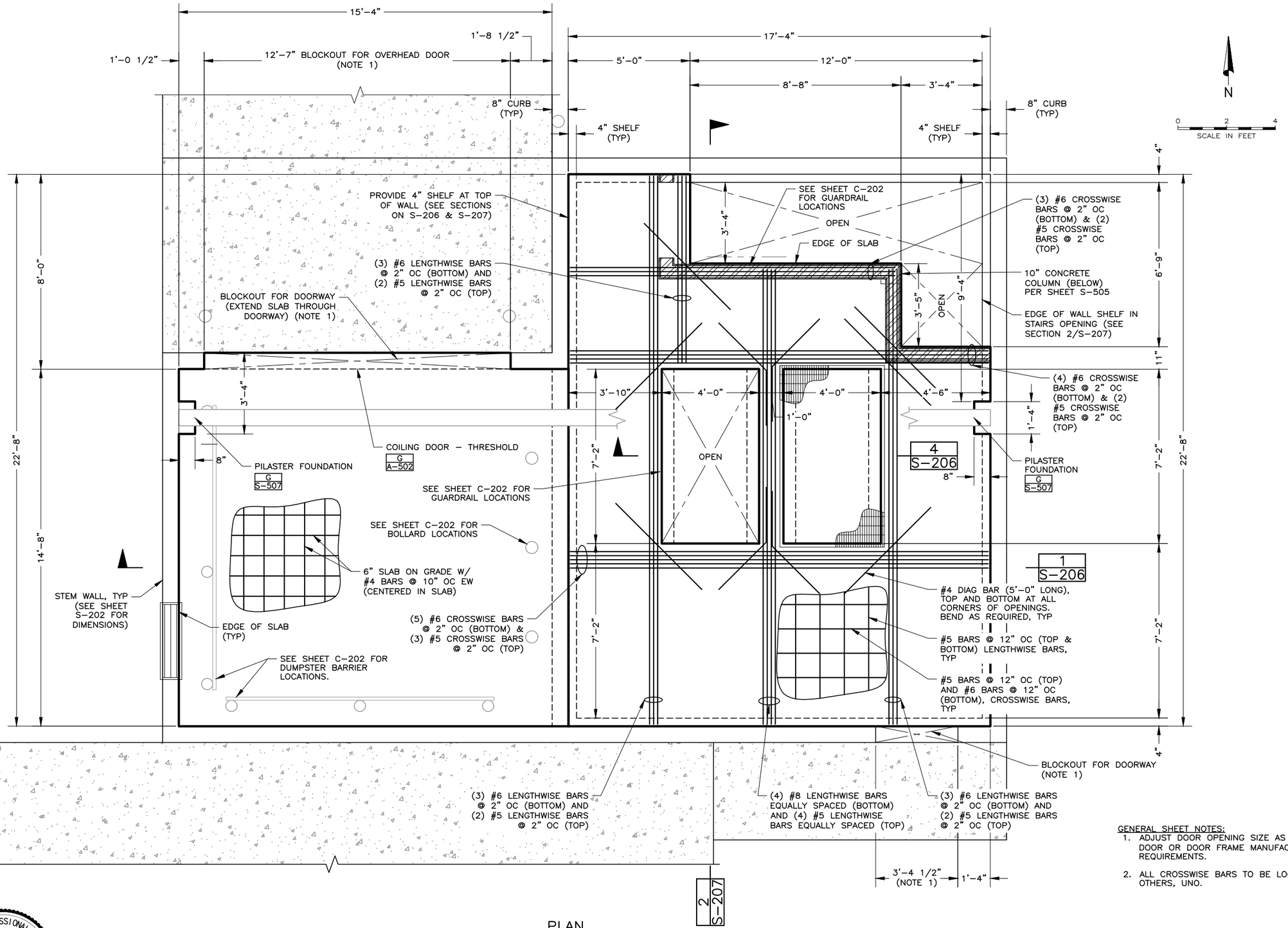


PLAN

GENERAL SHEET NOTES:

1. ADJUST DOOR OPENING SIZE AS REQUIRED TO MEET DOOR OR DOOR FRAME MANUFACTURER'S REQUIREMENTS.
2. ALL CROSSWISE BARS TO BE LOCATED BELOW OTHERS, UNO.

FILE NAME: PROJECTS\126 - SOUTH SALT LAKE CITY\42.200 - ZELLER AND DOWNTOWN SEWER IMPROVEMENTS\CAD\2 - DOWNTOWN AND PUMP STATION\S-204 SCREEN BUILDING UPPER FLOOR SLAB PLAN.DWG
FILE DATE: 4.15.2024 15:57:31 (MAJ)

PROFESSIONAL STRUCTURAL ENGINEER No. 2774619 ROBERT C. CONDER 4/18/2024 STATE OF UTAH

LICENSED PROFESSIONAL ENGINEER 4/19/24 No. 5052482 GREGORY S. THOMAS STATE OF UTAH

HANSEN ALLEN & LUCE inc ENGINEERS

| | | | | | | |
|---|---|---|---|---|---|---|
| DESIGNED ACS | 3 | | | | | |
| DRAFTED MAJ | 2 | | | | | |
| CHECKED GST | 1 | | | | | |
| DATE APRIL 2024 | NO. | DATE | REVISIONS | BY | APVD. | |

SCALE AS SHOWN

SOUTH SALT LAKE

DOWNTOWN SEWER IMPROVEMENTS AND PUMP STATION
STRUCTURAL
SCREEN BUILDING UPPER FLOOR SLAB PLAN

SHEET S-204

126.42.300

7/04

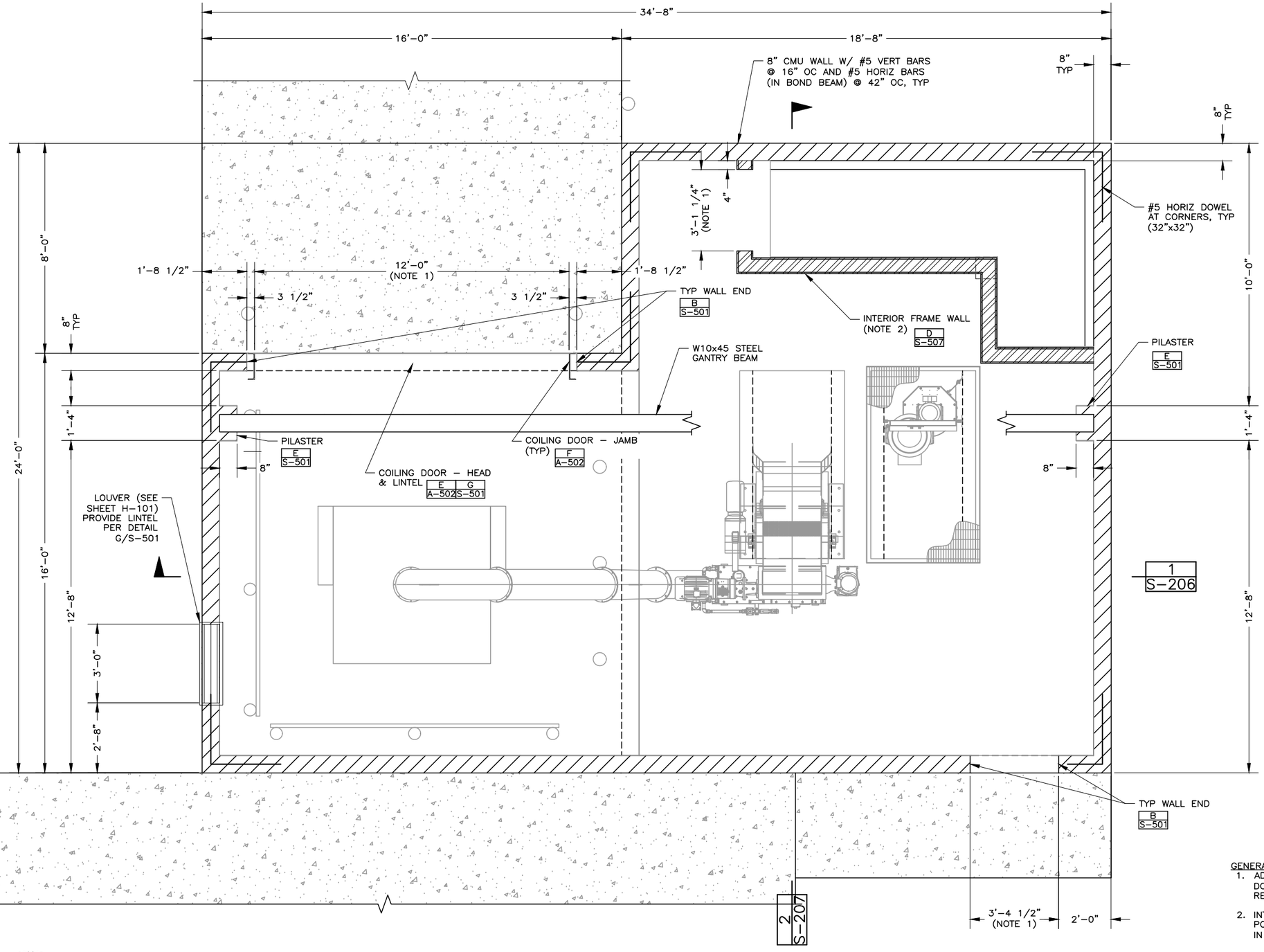


GENERAL SHEET NOTES:

1. ADJUST DOOR OPENING SIZE AS REQUIRED TO MEET DOOR OR DOOR FRAME MANUFACTURER'S REQUIREMENTS.
2. INTERIOR WALLS TO ALIGN WITH STAIR OPENING. POSITION RELATIVE TO EDGE OF OPENING AS SHOWN IN DETAIL D/S-507.

PLAN

PROFESSIONAL STRUCTURAL ENGINEER
No. 2774619
ROBERT C. CONDER
4/18/2024
STATE OF UTAH

LICENSED PROFESSIONAL ENGINEER
4/19/24
No. 5052482
GREGORY S. TUCKETT
STATE OF UTAH

HANSEN ALLEN & LUCE INC. ENGINEERS

| | | | | | | |
|---|---|---|---|---|---|---|
| DESIGNED | ACS | 3 | | | | |
| DRAFTED | MAJ | 2 | | | | |
| CHECKED | GST | 1 | | | | |
| DATE | APRIL 2024 | NO. | DATE | REVISIONS | BY | APVD. |

SCALE: AS SHOWN

SOUTH SALT LAKE

DOWNTOWN SEWER IMPROVEMENTS AND PUMP STATION
STRUCTURAL
SCREEN BUILDING CMU WALL PLAN

SHEET S-205

126.42.300

FILE NAME: PROJECTS\126 - SOUTH SALT LAKE CITY\42.200 - ZELLER AND DOWNTOWN SEWER IMPROVEMENTS\CAD\2 - DOWNTOWN AND PUMP STATION\S-205 SCREEN BUILDING CMU WALL PLAN.DWG
FILE DATE: 4.15.2024 16:04:04 (MAJ)

7/04

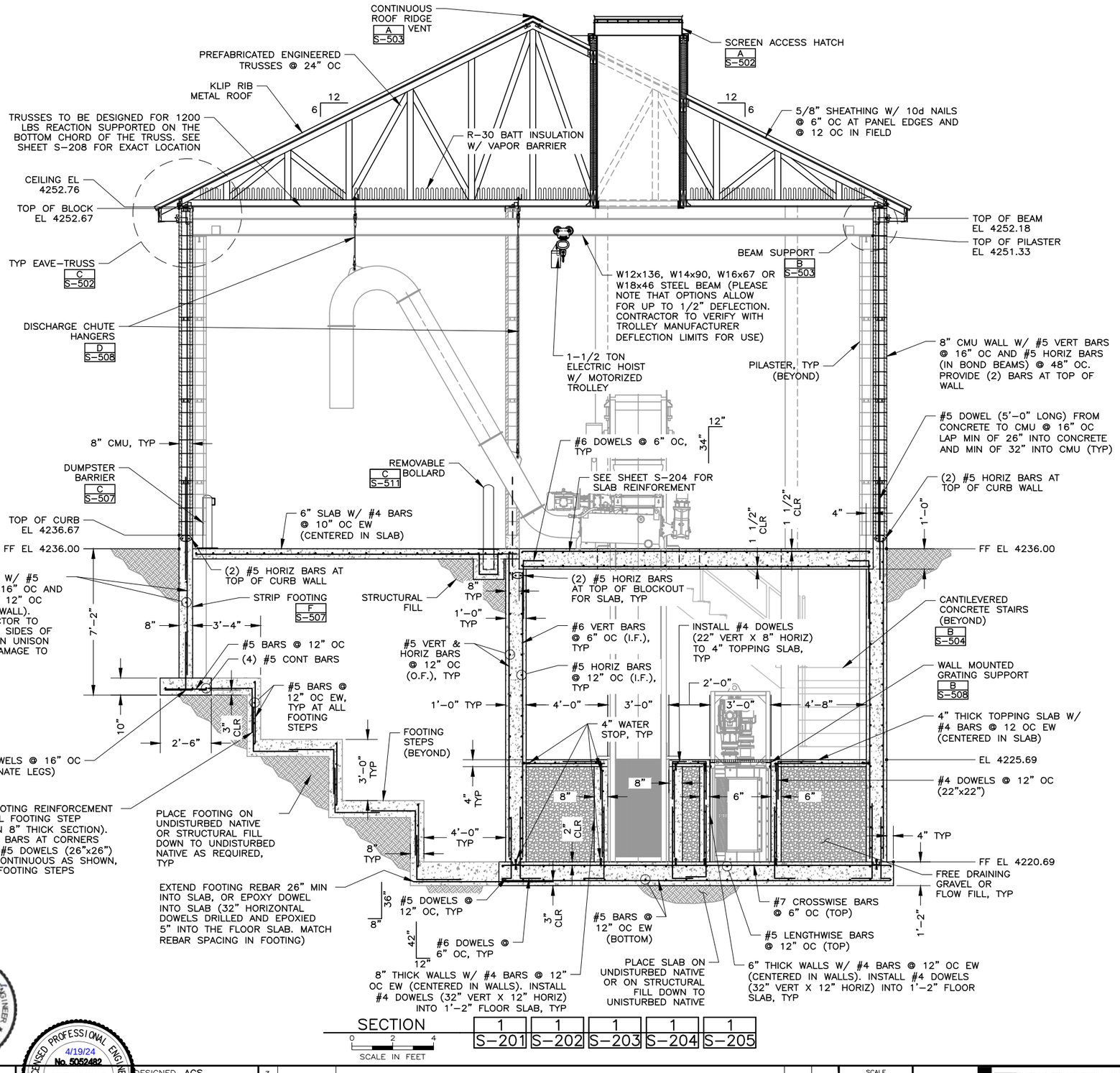


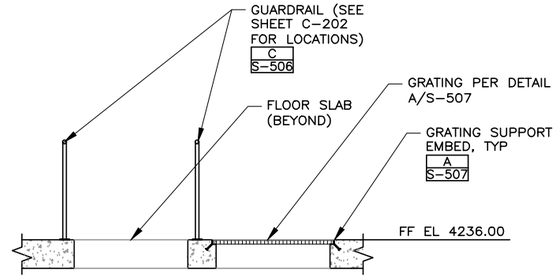


SECTION 4 S-204

0 2 4

SCALE IN FEET

PROFESSIONAL STRUCTURAL ENGINEER No. 2774619 ROBERT C. CONDER 4/18/2024 STATE OF UTAH

LICENSED PROFESSIONAL ENGINEER 4/19/24 No. 5052482 GREGORY S. TUCKETT STATE OF UTAH

HANSEN ALLEN & LUCE, Inc. ENGINEERS

| | | | | | | | |
|---|---|---|---|---|---|---|---|
| DESIGNED | ACS | 3 | | | | | |
| DRAFTED | MAJ | 2 | | | | | |
| CHECKED | GST | 1 | | | | | |
| DATE | APRIL 2024 | NO. | DATE | REVISIONS | BY | APVD. | |

SCALE: AS SHOWN

SOUTH SALT LAKE

DOWNTOWN SEWER IMPROVEMENTS AND PUMP STATION
STRUCTURAL
SCREEN BUILDING SECTIONS I

SHEET S-206

126.42.300

FILE NAME: PROJECTS\126 - SOUTH SALT LAKE CITY\42.200 - ZELLER AND DOWNTOWN SEWER IMPROVEMENTS\CAD\2 - DOWNTOWN AND PUMP STATION\S-206 SCREEN BUILDING SECTIONS I.DWG
FILE DATE: 4.15.2024 16:14:02 (MAJ)

7/04

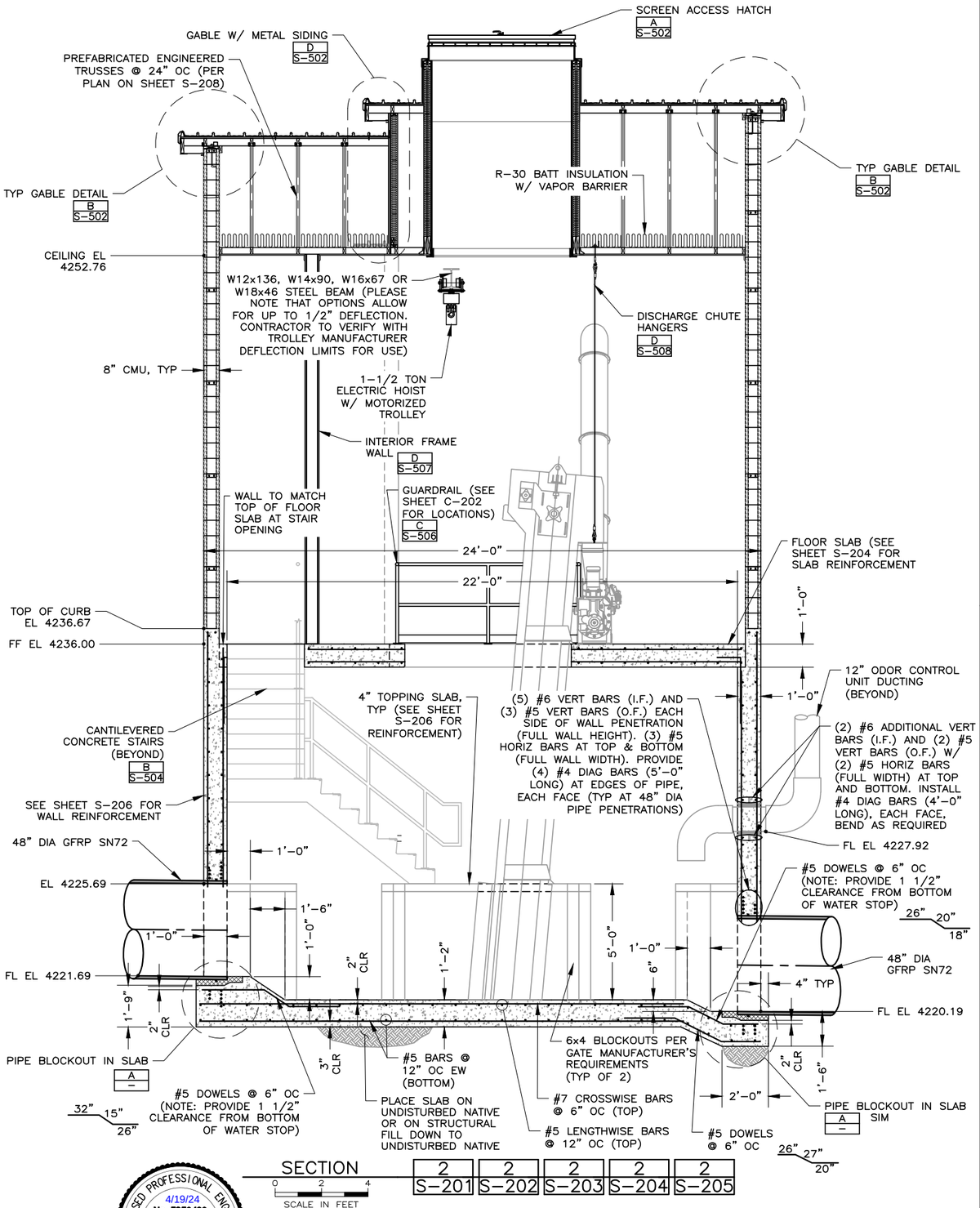


SECTION 2 | 2 | 2 | 2 | 2
S-201 | S-202 | S-203 | S-204 | S-205

0 2 4
SCALE IN FEET

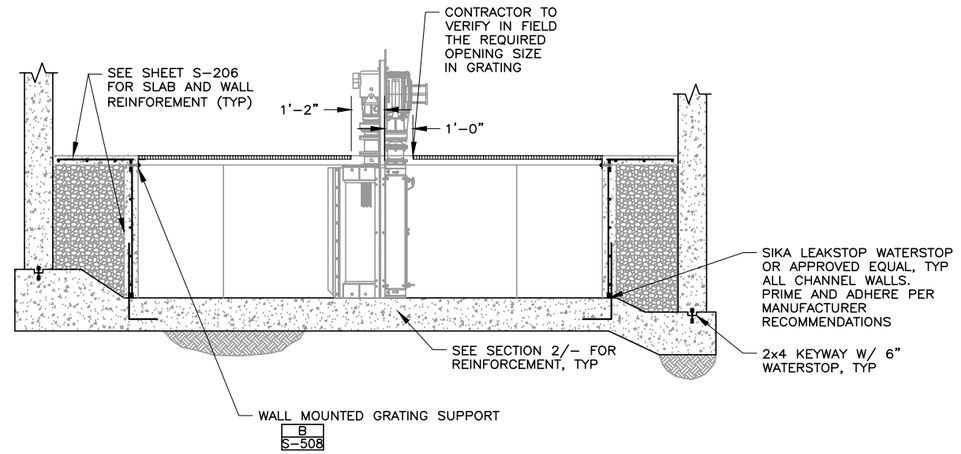


SECTION 3 | 3 | 3
S-201 | S-202 | S-203

0 2 4
SCALE IN FEET

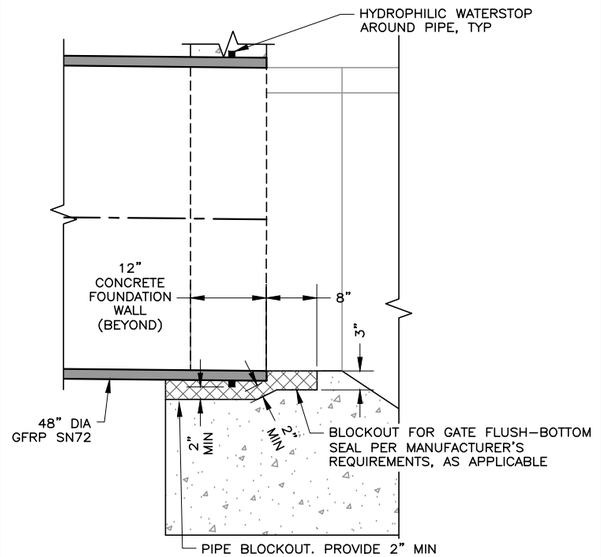


PIPE BLOCKOUT IN SLAB A –

0 1 2
SCALE IN FEET

GENERAL SHEET NOTES:
1. SEE SHEETS S-204 & S-206 FOR TYPICAL WALL AND FLOOR REINFORCEMENT.

PROFESSIONAL STRUCTURAL ENGINEER
No. 2774619
ROBERT C. CONDER
4/18/2024
STATE OF UTAH

LICENSED PROFESSIONAL ENGINEER
4/19/24
No. 5052482
GREGORY S. TUCKER
STATE OF UTAH

HANSEN ALLEN & LUCE inc ENGINEERS

| | | | | | | |
|---|---|---|---|---|---|---|
| DESIGNED ACS | 3 | | | | | |
| DRAFTED MAJ | 2 | | | | | |
| CHECKED GST | 1 | | | | | |
| DATE APRIL 2024 | NO. | DATE | REVISIONS | BY | APVD. | |

SCALE: AS SHOWN

SOUTH SALT LAKE

DOWNTOWN SEWER IMPROVEMENTS AND PUMP STATION
STRUCTURAL
SCREEN BUILDING SECTIONS II

SHEET S-207
126.42.300

FILE NAME: PROJECTS\126 - SOUTH SALT LAKE CITY\42.200 - ZELLER AND DOWNTOWN SEWER IMPROVEMENTS\CAD\2 - DOWNTOWN AND PUMP STATION\S-207 SCREEN BUILDING SECTIONS II.DWG
FILE DATE: 3.15.2024 14:28:45 (MAJ)

7/04

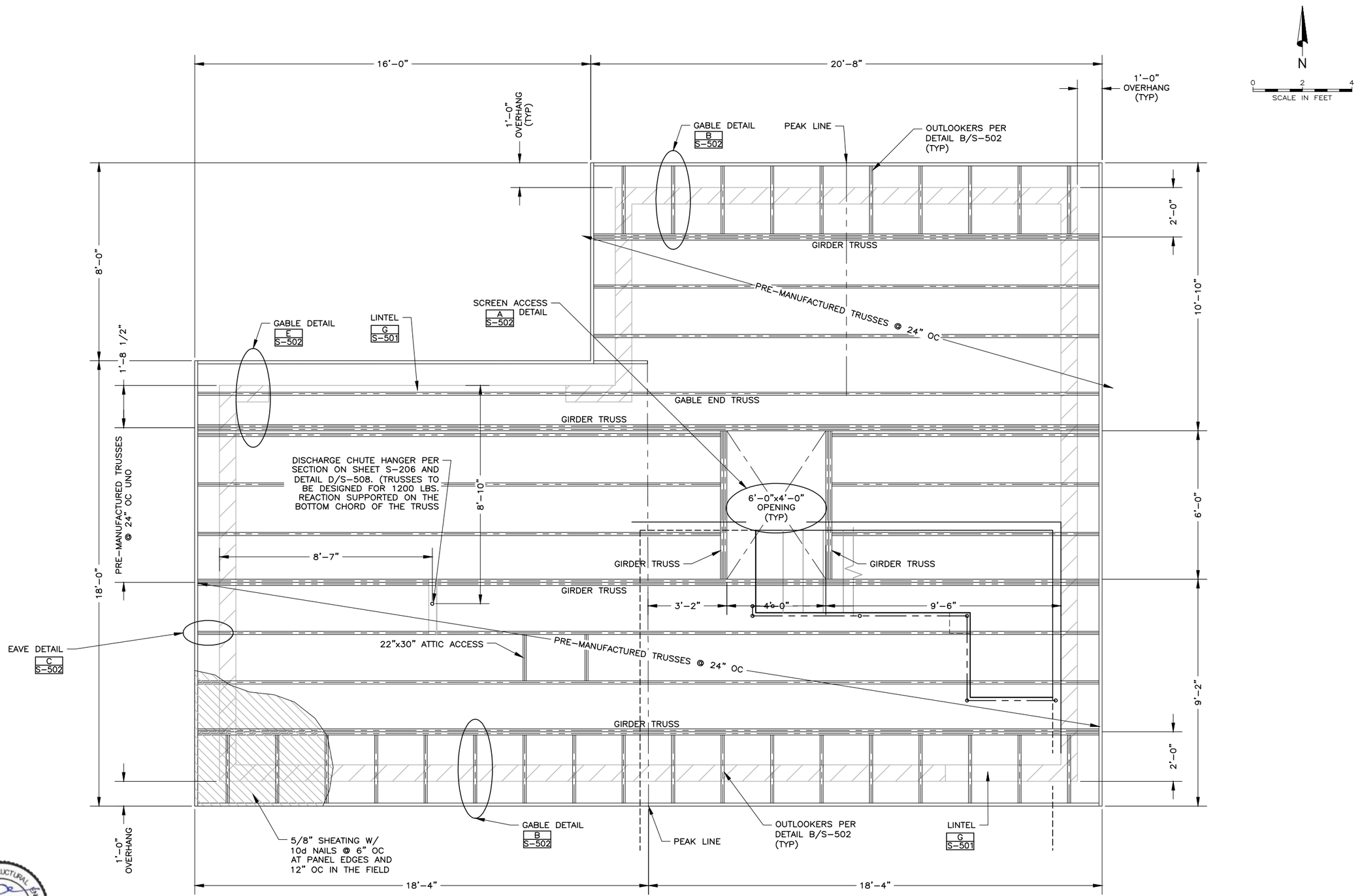


GENERAL SHEET NOTES:
1. SEE SHEET S-100 STRUCTURAL NOTES FOR LOAD AND TRUSS REQUIREMENTS.

PROFESSIONAL STRUCTURAL ENGINEER
No. 2774619
ROBERT C. CONDER
4/18/2024
STATE OF UTAH

LICENSED PROFESSIONAL ENGINEER
4/19/24
No. 5052482
GREGORY S. TWOMBLY
STATE OF UTAH

HANSEN ALLEN & LUCE inc
ENGINEERS

| | | | | | |
|---|---|---|---|---|---|
| DESIGNED | ACS | 3 | | | |
| DRAFTED | MAJ | 2 | | | |
| CHECKED | GST | 1 | | | |
| DATE | APRIL 2024 | NO. | DATE | REVISIONS | BY / APVD. |

SCALE: AS SHOWN

SOUTH SALT LAKE

DOWNTOWN SEWER IMPROVEMENTS AND PUMP STATION
STRUCTURAL
SCREEN BUILDING ROOFING PLAN

SHEET S-208

126.42.300

FILE NAME: PROJECTS\126 - SOUTH SALT LAKE CITY\42.200 - ZELLER AND DOWNTOWN SEWER IMPROVEMENTS\CAD\2 - DOWNTOWN AND PUMP STATION\S-208 SCREEN BUILDING ROOFING PLAN.DWG
FILE DATE: 3.6.2024 1:52:24 23 (MAJ)

7/04

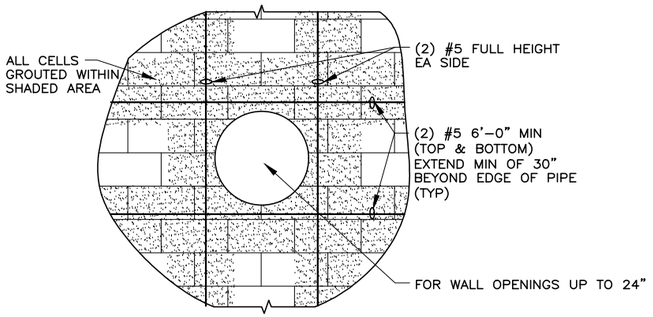


## PIPE PENETRATION THROUGH MASONRY WALLS

| A |
|---|
| – |

NTS

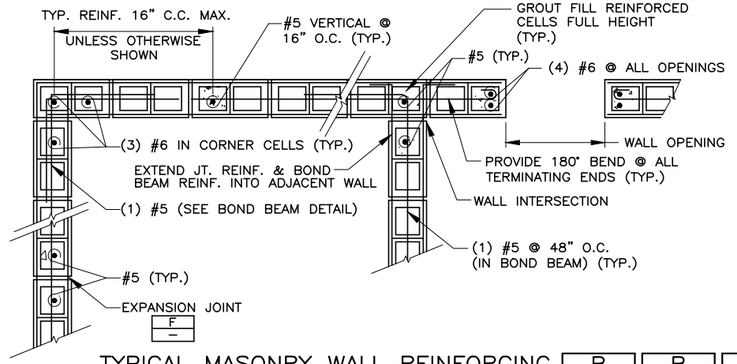


## TYPICAL MASONRY WALL REINFORCING

| B | B | B |
|---|---|---|
| – | S-105 | S-205 |

NTS

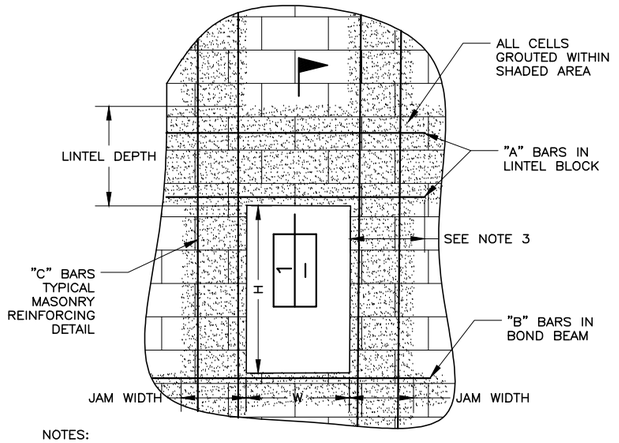


NOTES:

1. USE BAR QUANTITIES AND SIZES GIVEN IN LINTEL SCHEDULE UNLESS OTHERWISE NOTED ON THE DRAWINGS.
2. EXTEND "C" BARS 48 BAR DIAMETERS, BUT NOT LESS THAN 2'-0" BEYOND TOP AND BOTTOM OF OPENING EXCEPT THAT WHEN "H" OR "W" EXCEEDS 2'-0". "C" BARS SHALL EXTEND FULL HEIGHT. WHERE THERE IS LESS THAN 8'-0" BETWEEN ADJACENT OPENINGS, EXTEND REINFORCING CONTINUOUS TO 2'-8" BEYOND FURTHEST OPENING.
3. "A" AND "B" BARS SHALL EXTEND 48 BAR DIAMETERS, BUT NOT LESS THAN 2'-0" EACH SIDE OF THE OPENINGS.
4. FOR BARS SIZES. MATCH TYPICAL WALL REINFORCING AS SHOWN ON THE BUILDING WALL SECTIONS.
5. FOR LINTEL DEPTH EQUAL TO OR GREATER THAN 48", PROVIDE ADDITIONAL LAYER OF HORIZONTAL REINFORCEMENT AT 12" FROM BOTTOM OF LINTEL. MATCH SIZE OF TYPICAL WALL HORIZONTAL REINFORCEMENT.
6. MATCH TYPICAL #5 VERTICAL WALL REINFORCEMENT FOR STIRRUPS ("S" SHAPED STIRRUPS WITH HOOKS AT BOTH TOP & BOTTOM).

| CMU OPENING REINF SCHEDULE 8" WALLS | | | | | | |
|---|---|---|---|---|---|---|
| W | LINTEL DEPTH | STIRRUP SIZE / SPACING | A BARS | B BARS | C BARS | JAMB WIDTH |
| <6'-6" | 1'-4" | NOTE 6 | (2) #5 | (1) #5 | (4) #6 | 16" |
| <13'-0" | 2'-0" | NOTE 6 | (2) #5 | (1) #5 | (4) #6 | 16" |

## MASONRY LINTEL DETAILS AT WALL OPENINGS

NTS

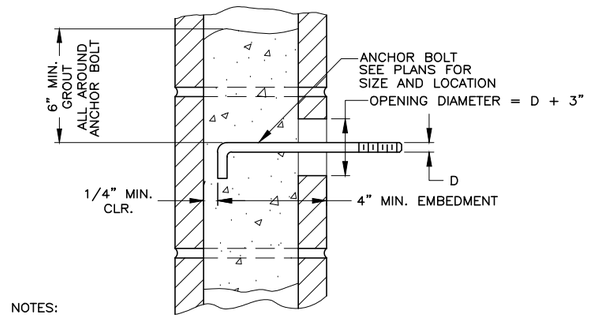


NOTES:

1. SET ANCHOR BOLTS WITH TEMPLATE.
2. CUT BLOCK WEB AS REQUIRED TO ALLOW PLACEMENT OF ANCHOR BOLT AND 1/2" MINIMUM OF GROUT BETWEEN ANCHOR BOLT AND BLOCK.
3. STAINLESS STEEL WEDGE OR SCREW ANCHORS MAY BE USED IN LIEU OF ANCHOR BOLTS. CONTACT ENGINEER W/ ALT. IF DESIRED.

## ANCHOR BOLTS IN MASONRY

| C |
|---|
| – |

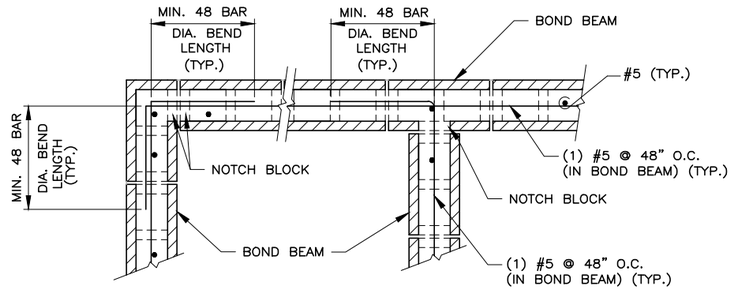


NOTE: SEE MASONRY NOTES (SEE SHEET S-100)

## MASONRY WALL REINFORCING AT TYPICAL BOND BEAM

| D | D |
|---|---|
| – | S-105 |

NTS

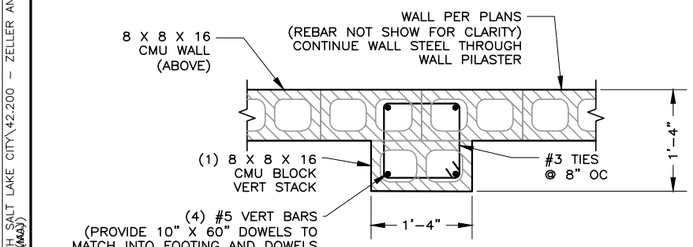


DETAIL NOTES:

1. SEE DETAILS B/S-503 & F/S-507 FOR EMBEDDED BEARING PAD AND ATTACHMENT TO CONCRETE PILASTER BELOW.
2. USE SIMILAR DETAIL FOR PILASTERS IN CORNER.

## MASONARY PILASTER

| E | E | E |
|---|---|---|
| S-105 | S-205 | S-503 |

NTS

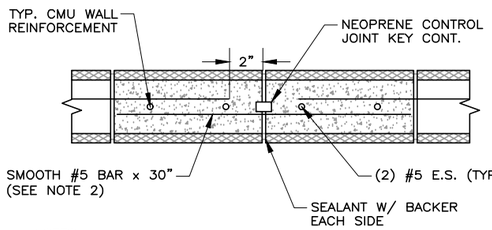


NOTES:

1. EXACT LOCATIONS OF JOINTS TO BE DETERMINED BY THE CONTRACTOR & APPROVED BY THE ENGINEER. SPACING OF JOINTS TO NOT EXCEED 24' MAX.
2. SMOOTH BARS ACROSS JOINT SHALL MATCH HORIZONTAL BAR SPACING. PREVENT BOND BETWEEN BAR AND GROUT ON ONE SIDE OF JOINT WITH GREASE FILLED PVC SLEEVE. CAP AND SIZE SLEEVES TO ALLOW ONE INCH OF MOVEMENT BEYOND END OF PANELS.
3. ROOF LEVEL CHORD REINF. SHALL BE CONTINUOUS THROUGH CONTROL JOINT.
4. CONTROL JOINTS SHALL NOT INTERSECT LINTELS.

## CMU EXPANSION JOINT DETAIL

| F |
|---|
| – |

NTS

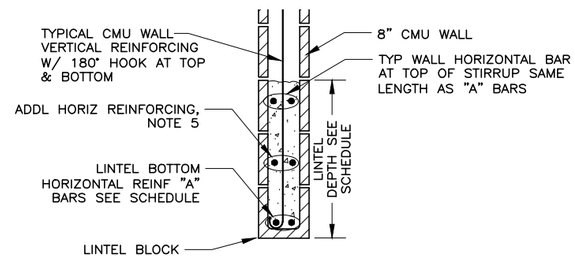


## MASONRY LINTEL DETAILS

| G | G | G | G |
|---|---|---|---|
| – | S-105 | S-109 | S-205 |

NTS

PROFESSIONAL STRUCTURAL ENGINEER No. 2774619 ROBERT C. CONDER 4/18/2024 STATE OF UTAH

LICENSED PROFESSIONAL ENGINEER 4/19/24 No. 5052482 GREGORY S. TWOMBS STATE OF UTAH

HANSEN ALLEN & LUCE inc ENGINEERS

| | | | | | |
|---|---|---|---|---|---|
| DESIGNED | ACS | 3 | | | |
| DRAFTED | MAJ | 2 | | | |
| CHECKED | GST | 1 | | | |
| DATE | APRIL 2024 | NO. | DATE | REVISIONS | BY / APVD. |

SCALE: AS SHOWN

SOUTH SALT LAKE

DOWNTOWN SEWER IMPROVEMENTS AND PUMP STATION
STRUCTURAL
TYPICAL MASONRY DETAILS

SHEET S-501

126.42.300

FILE NAME: PROJECTS\126 - SOUTH SALT LAKE CITY\42.200 - ZELLER AND DOWNTOWN SEWER IMPROVEMENTS\CAD\2 - DOWNTOWN AND PUMP STATION\S-501 TYP MASONRY DETAILS.DWG
FILE DATE: 3/15/2024 14:43:29 (MAJ)

7/04

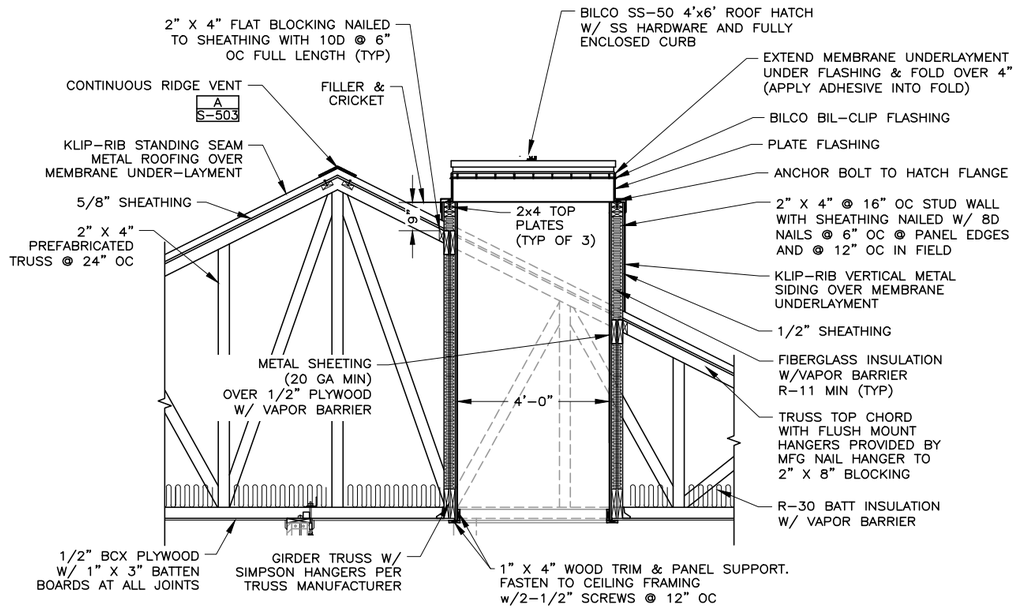


DETAIL NOTE:

1. CONTRACTOR TO VERIFY ACCESS HATCH IS CENTERED OVER SCREEN.

SCREEN ACCESS HATCH
NTS

| A | A | A |
|---|---|---|
| S-206 | S-207 | S-208 |

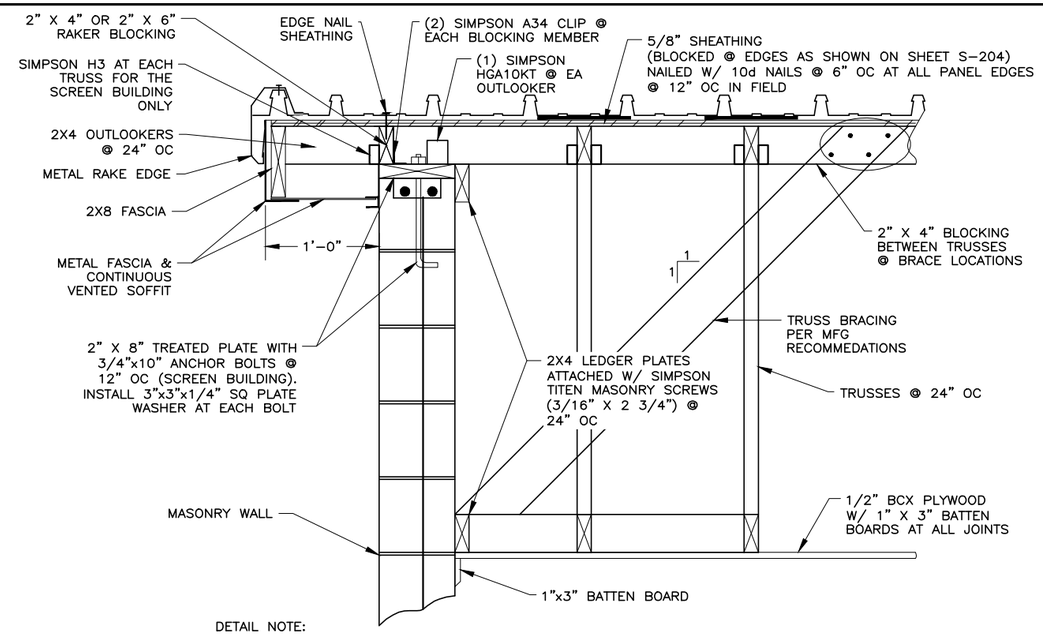


DETAIL NOTE:

1. INSTALL ROOFING SYSTEM PER MANUFACTURER'S RECOMMENDATIONS.

TYPICAL GABLE DETAIL (SCREEN BUILDING)
NTS

| B | B | B |
|---|---|---|
| – | S-207 | S-208 |

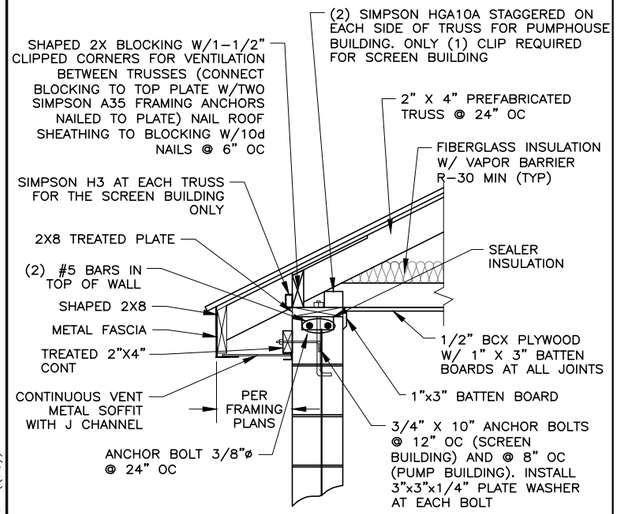


TYPICAL EAVE-TRUSS & CEILING
NTS

| C | C |
|---|---|
| S-106 | S-107 |
| C | C |
| S-109 | S-208 |

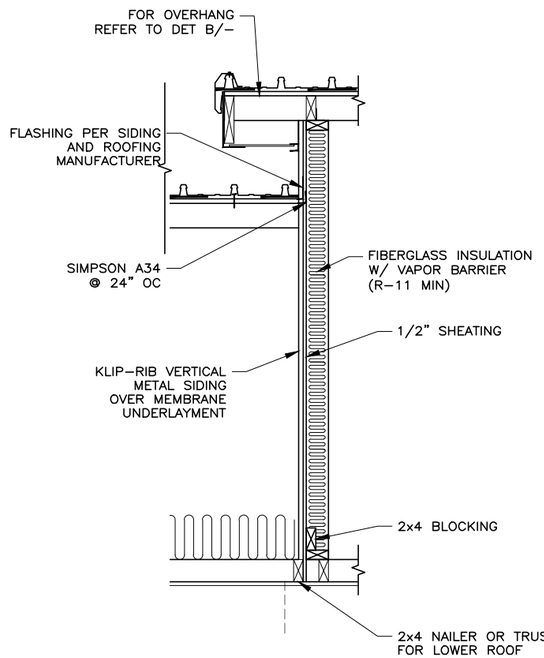


GABLE W/ METAL SIDING
NTS

| D |
|---|
| S-207 |

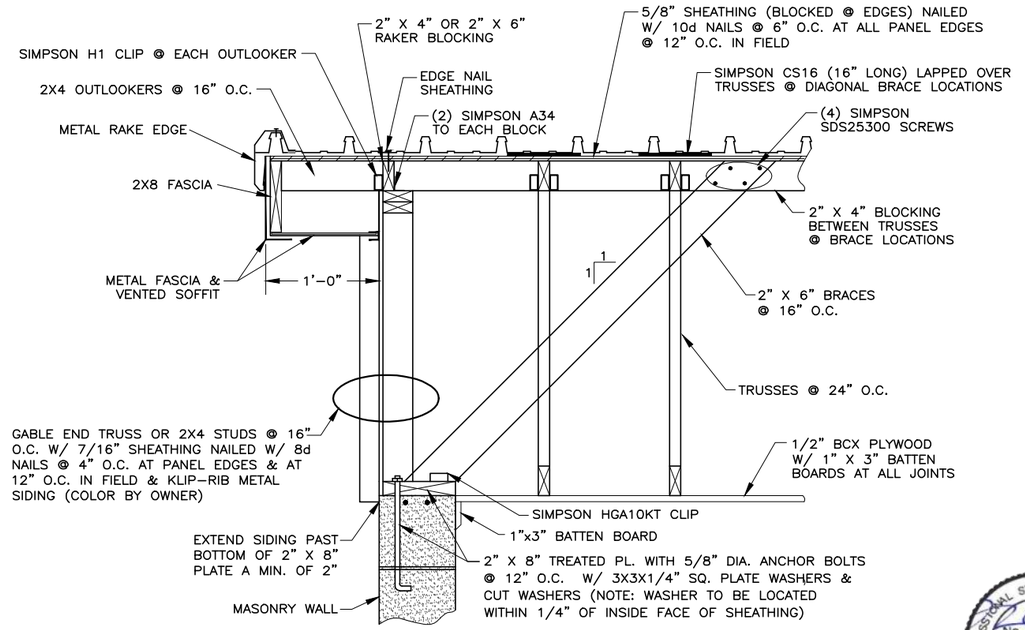


TYPICAL GABLE DETAIL
NTS

| E |
|---|
| S-208 |

FILE NAME: PROJECTS\126 – SOUTH SALT LAKE CITY\42.200 – ZELLER AND DOWNTOWN SEWER IMPROVEMENTS\CAD\2 – DOWNTOWN AND PUMP STATION\S-502 TYP ROOFING DETAILS 1.DWG
FILE DATE: 3/6/2024 1:52:58:34 (MAJ)
7/04

LICENSED PROFESSIONAL ENGINEER
4/19/24
No. 5052482
GREGORY S. THOMAS
STATE OF UTAH

PROFESSIONAL STRUCTURAL ENGINEER
No. 2774619
ROBERT C. CONDER
4/18/2024
STATE OF UTAH

HANSEN ALLEN & LUCE Inc
ENGINEERS

| | | | | | |
|---|---|---|---|---|---|
| DESIGNED | ACS | 3 | | | |
| DRAFTED | MAJ | 2 | | | |
| CHECKED | GST | 1 | | | |
| DATE | APRIL 2024 | NO. | DATE | REVISIONS | BY / APVD. |

SCALE: AS SHOWN

SOUTH SALT LAKE

DOWNTOWN SEWER IMPROVEMENTS AND PUMP STATION
STRUCTURAL
TYPICAL ROOFING DETAILS I

SHEET S-502
126.42.300

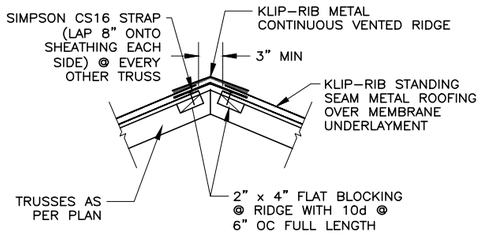


TYPICAL CONTINUOUS ROOF VENT AND CAP
NTS

| A | A |
|---|---|
| — | S-107 |
| A | A |
| S-206 | S-502 |

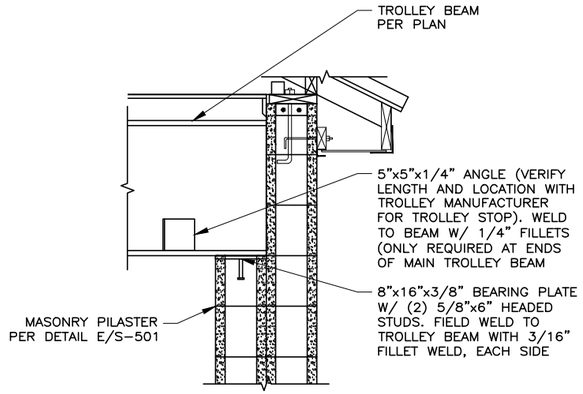


BEAM SUPPORT
NTS

| B | B | B |
|---|---|---|
| S-105 | S-106 | S-206 |

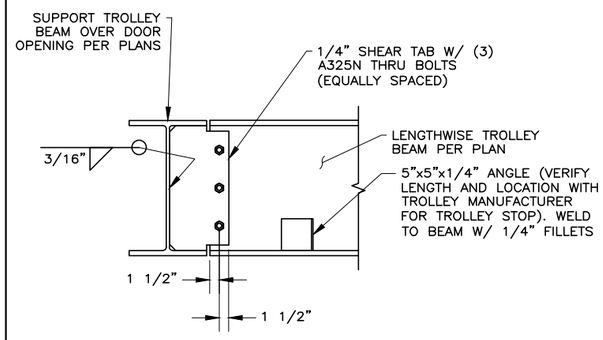


SHEAR TAB CONNECTION FOR TROLLEY HOIST BEAM
NTS

| C | C |
|---|---|
| S-105 | S-106 |

FILE NAME: PROJECTS\126 - SOUTH SALT LAKE CITY\42.200 - ZELLER AND DOWNTOWN SEWER IMPROVEMENTS\CAD\2 - DOWNTOWN AND PUMP STATION\S-503 TYP ROOFING DETAILS II.DWG
FILE DATE: 3/26/2024 1:55:36 PM (MAJ)

PROFESSIONAL STRUCTURAL ENGINEER No. 2774619 ROBERT C. CONDER 4/18/2024 STATE OF UTAH

LICENSED PROFESSIONAL ENGINEER 4/19/24 No. 5052482 GREGORY S. THOMAS STATE OF UTAH

HANSEN ALLEN & LUCE INC ENGINEERS

| | | | | | | |
|---|---|---|---|---|---|---|
| DESIGNED ACS | 3 | | | | | |
| DRAFTED MAJ | 2 | | | | | |
| CHECKED GST | 1 | | | | | |
| DATE APRIL 2024 | NO. | DATE | REVISIONS | BY | APVD. | |

SCALE AS SHOWN

SOUTH SALT LAKE

DOWNTOWN SEWER IMPROVEMENTS AND PUMP STATION
STRUCTURAL
TYPICAL ROOFING DETAILS II

SHEET S-503
126.42.300

7/04

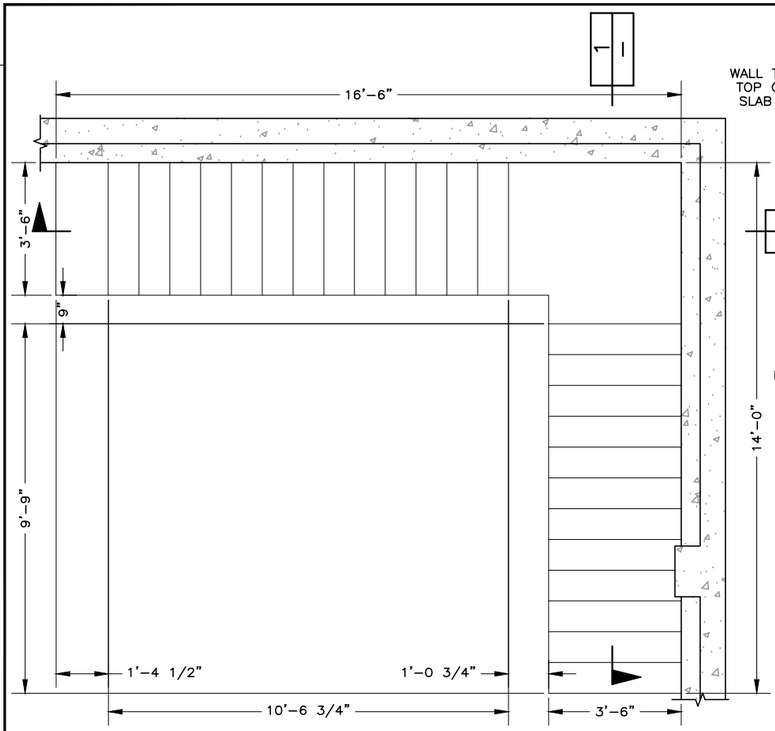


PUMPHOUSE STAIR PLAN

| A | A | A | A |
|---|---|---|---|
| C–107 | S–103 | S–106 | S–107 |

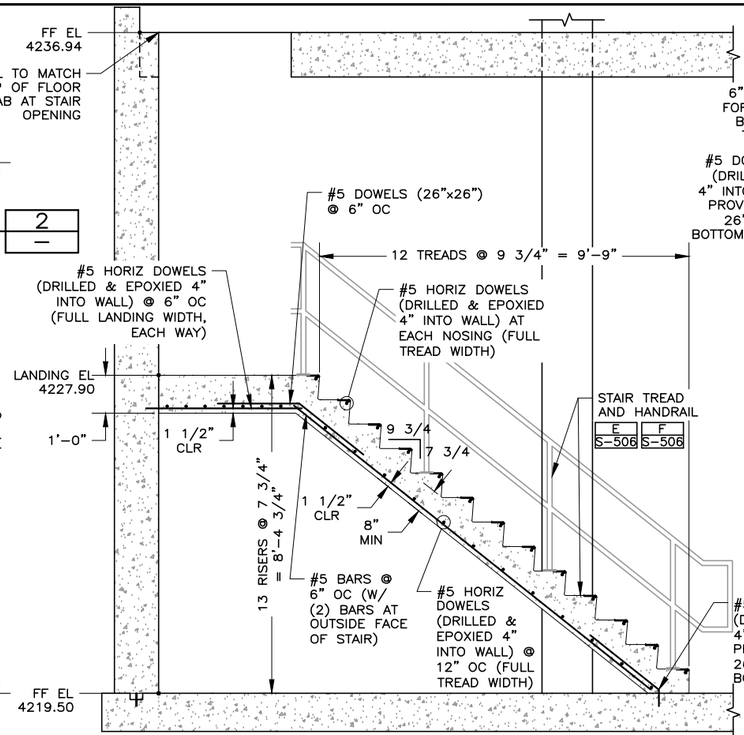


SECTION 1 — NTS

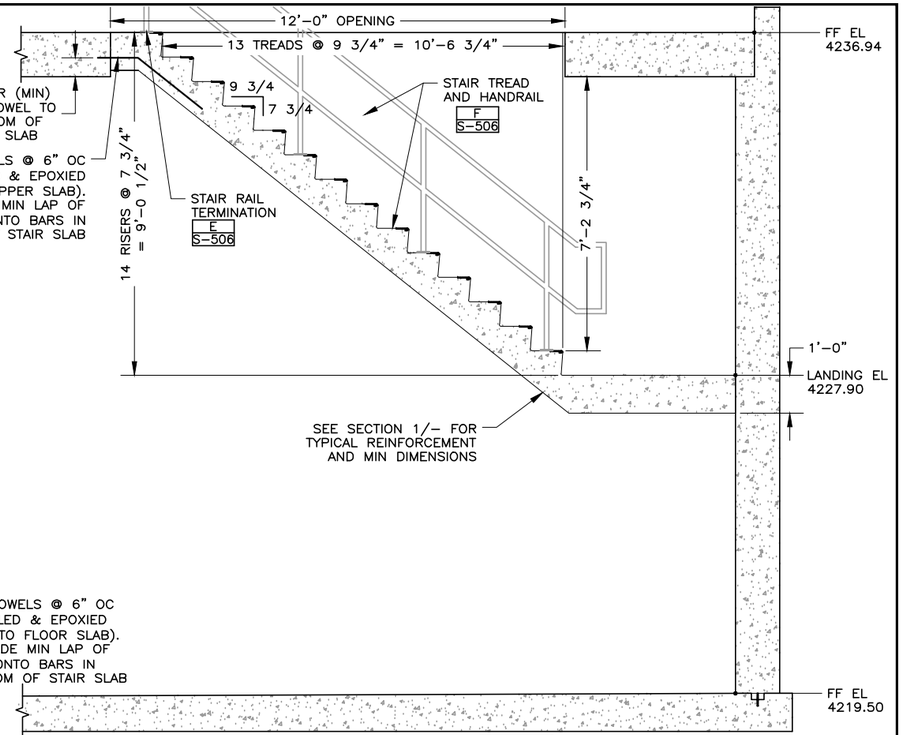


SECTION 2 — NTS

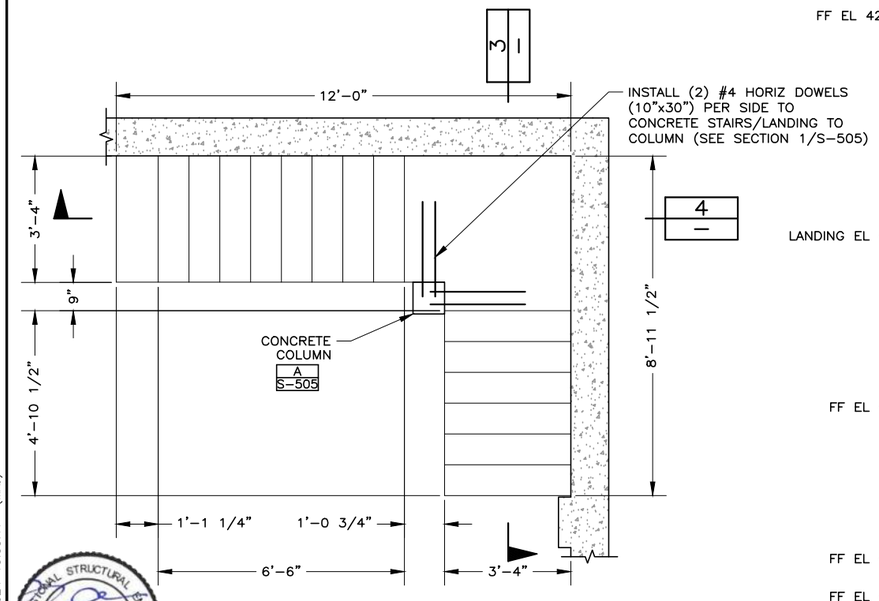


SCREEN BLDG STAIR PLAN

| B | B | B | B | B |
|---|---|---|---|---|
| S–201 | S–203 | S–206 | S–207 | S–505 |

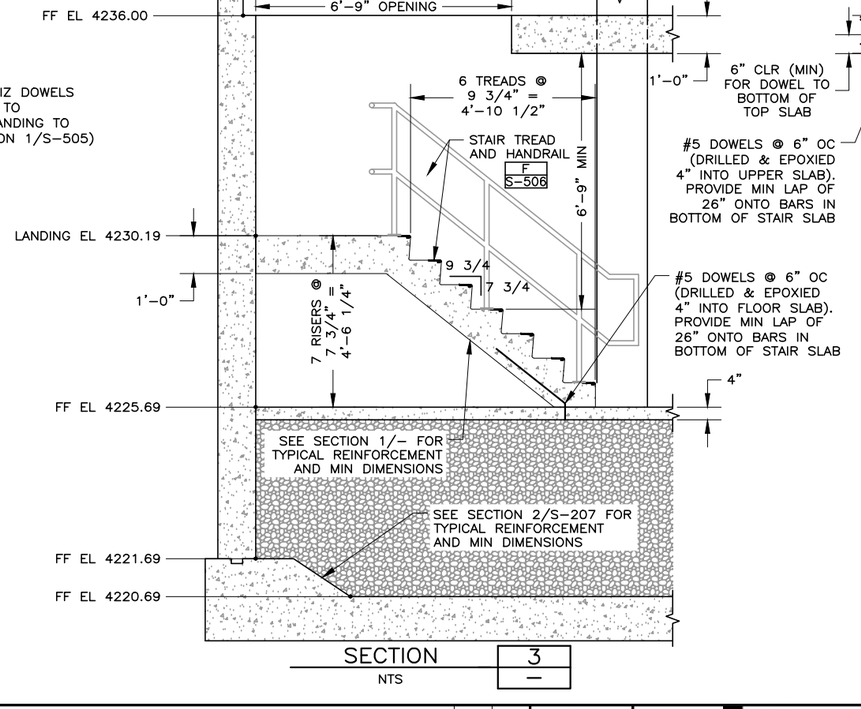


SECTION 3 — NTS

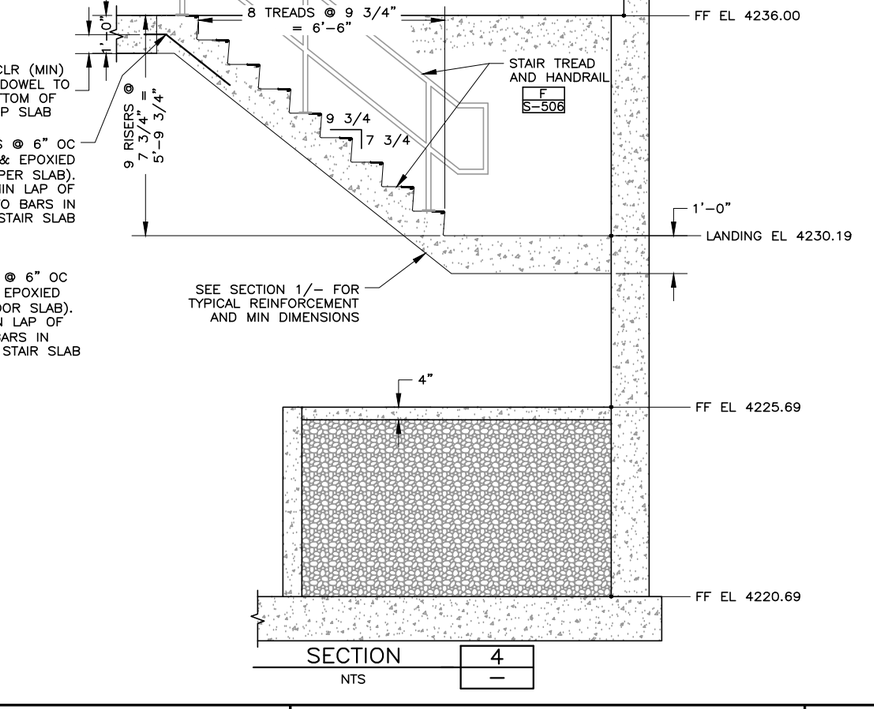


SECTION 4 — NTS

PROFESSIONAL STRUCTURAL ENGINEER
No. 2774619
ROBERT C. CONDER
4/18/2024
STATE OF UTAH

LICENSED PROFESSIONAL ENGINEER
4/19/24
No. 5052482
GREGORY S. TUCKETT
STATE OF UTAH

HANSEN ALLEN & LUCE, Inc. ENGINEERS

| | | | | | |
|---|---|---|---|---|---|
| DESIGNED | ACS | 3 | | | |
| DRAFTED | MAJ | 2 | | | |
| CHECKED | GST | 1 | | | |
| DATE | APRIL 2024 | NO. | DATE | REVISIONS | BY / APVD. |

SCALE: NTS

SOUTH SALT LAKE

DOWNTOWN SEWER IMPROVEMENTS AND PUMP STATION
STRUCTURAL
CONCRETE STAIR PLANS & SECTIONS

SHEET S–504

126.42.300

FILE NAME: PROJECTS\126 – SOUTH SALT LAKE CITY\42.200 – ZELLER AND DOWNTOWN SEWER IMPROVEMENTS\CAD\2 – DOWNTOWN AND PUMP STATION\S–504 CONC STAIR PLANS & SECTIONS.DWG
FILE DATE: 3.6.2024 15:33:17 (MAJ)

7/04

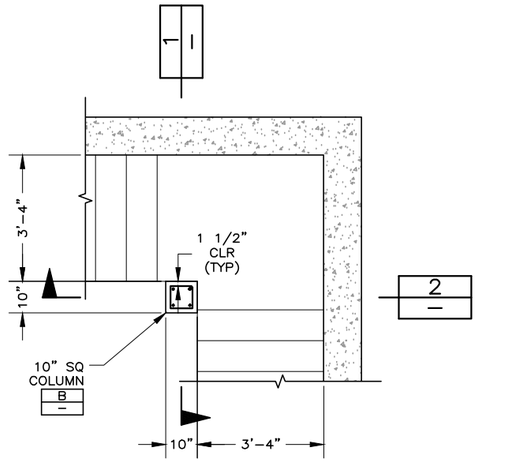


CONCRETE COLUMN | A S-201 | A S-202 | A S-504

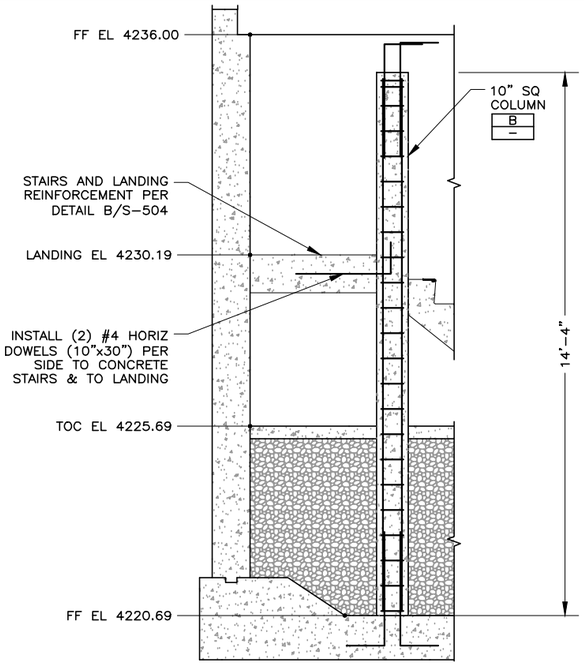


SECTION 1 — NTS

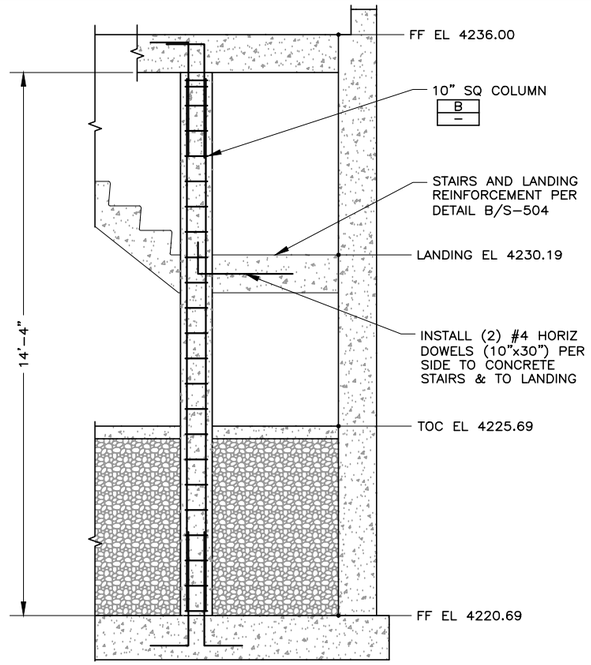


SECTION 2 — NTS

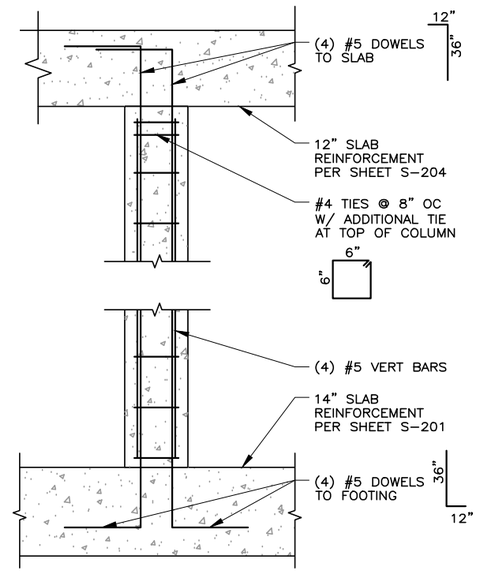


10" SQ COLUMN B — NTS

FILE NAME: PROJECTS\126 - SOUTH SALT LAKE CITY\42.200 - ZELLER AND DOWNTOWN SEWER IMPROVEMENTS\CAD\2 - DOWNTOWN AND PUMP STATION\S-505 CONC COLUMN PLAN & SECTIONS.DWG
FILE DATE: 3.6.2024 15:35:00 (MAJ)

PROFESSIONAL STRUCTURAL ENGINEER — No. 2774619 — ROBERT C. CONDER — 4/18/2024 — STATE OF UTAH

LICENSED PROFESSIONAL ENGINEER — 4/19/24 — No. 5052482 — GREGORY S. THOMAS — STATE OF UTAH

HANSEN ALLEN & LUCE inc ENGINEERS

| | | | | | |
|---|---|---|---|---|---|
| DESIGNED | ACS | 3 | | | |
| DRAFTED | MAJ | 2 | | | |
| CHECKED | GST | 1 | | | |
| DATE | APRIL 2024 | NO. | DATE | REVISIONS | BY / APVD. |

SCALE: NTS

SOUTH SALT LAKE

DOWNTOWN SEWER IMPROVEMENTS AND PUMP STATION
STRUCTURAL
CONCRETE COLUMN PLAN & SECTIONS

SHEET S-505

126.42.300

7/04

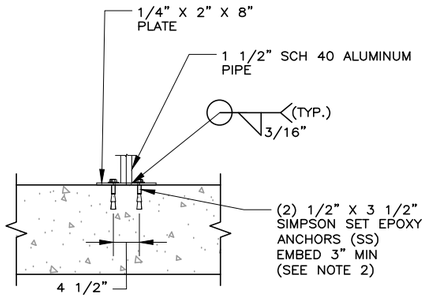


RAILING/FLOOR CONNECTION | A | —

NTS

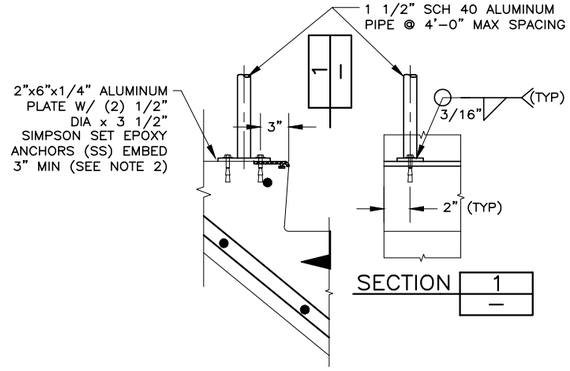


SECTION | 1 | —

RAILING/STAIR TREAD CONNECTION | B | —

NTS

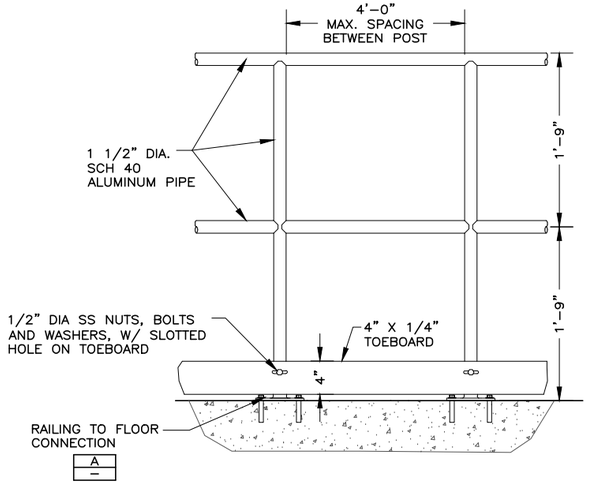


GUARDRAIL | C | — | C | C-202

NTS

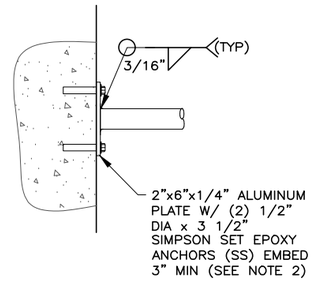


GUARDRAIL TO WALL DETAIL | D | —

NTS

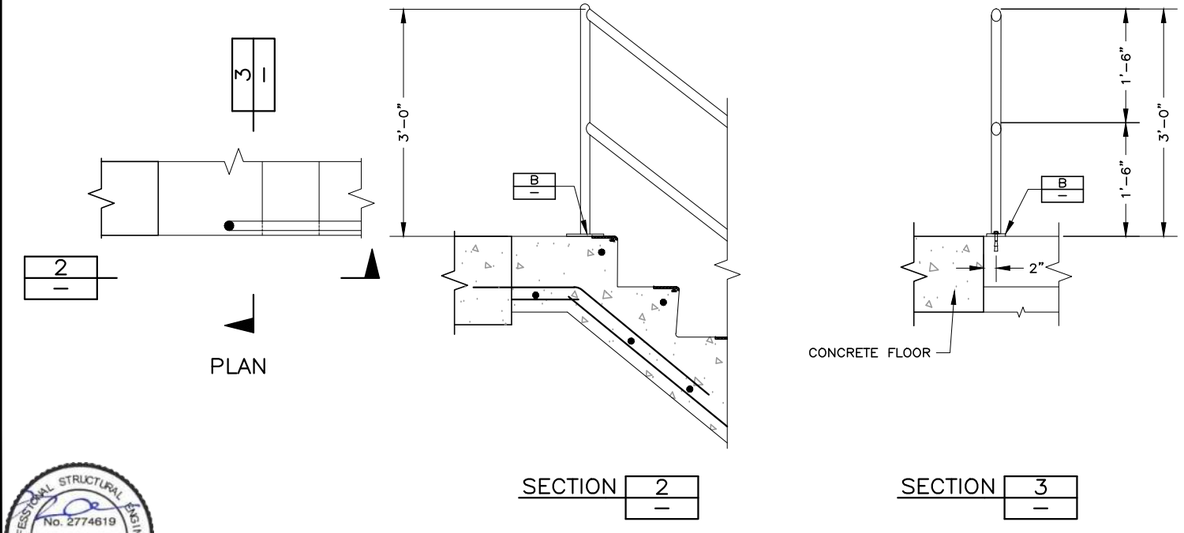


SECTION | 2 | —

SECTION | 3 | —

TYPICAL STAIR RAIL TERMINATION | E | C-106 | E | C-202 | E | S-504

NTS

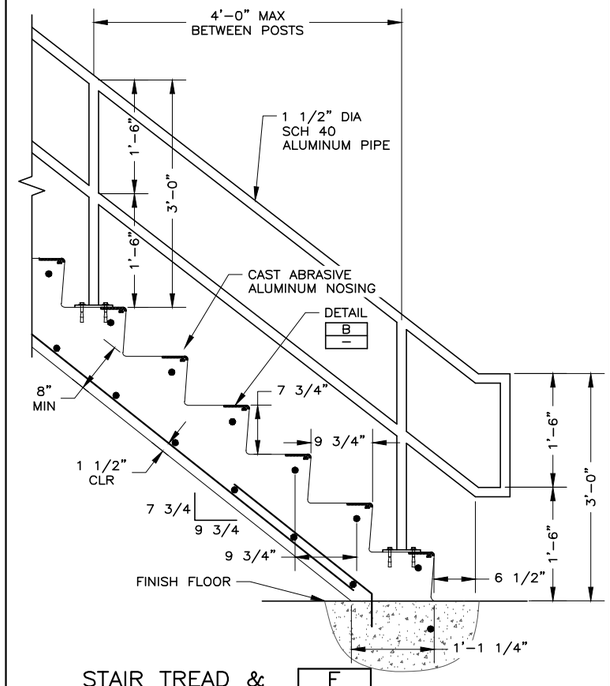


STAIR TREAD & HANDRAIL DETAIL | F | S-504

NTS

GENERAL SHEET NOTES:

1. ALL RAILING, DECKING, PLATES, AND STRUCTURAL MEMBERS TO BE ALUMINUM FABRICATION UNLESS OTHERWISE NOTED.
2. ALL BOLTS AND NUTS TO BE STAINLESS STEEL UNLESS OTHERWISE NOTED.
3. DRILL AND EPOXY ANCHOR PER MANUFACTURER'S REQUIREMENTS.
4. HANDRAIL HEIGHT SHALL BE 38" (VERTICAL) MEASURED FROM STAIR NOSING LINE OR FLOOR.
5. ALL ALUMINUM IN CONTACT WITH CONCRETE MUST BE COATED WITH AN APPROVED BITUMINOUS PAINT, COLOR-MATCHED POLYURETHANE PAINT OR SIMILAR.

PROFESSIONAL STRUCTURAL ENGINEER
No. 2774619
ROBERT C. CONDER
4/18/2024
STATE OF UTAH

LICENSED PROFESSIONAL ENGINEER
4/19/24
No. 5052482
GREGORY S. TILLOTSON
STATE OF UTAH

HANSEN ALLEN & LUCE inc ENGINEERS

| | | | | | | |
|---|---|---|---|---|---|---|
| DESIGNED | ACS | 3 | | | | |
| DRAFTED | MAJ | 2 | | | | |
| CHECKED | GST | 1 | | | | |
| DATE | APRIL 2024 | NO. | DATE | REVISIONS | BY | APVD. |

SCALE: NTS

SOUTH SALT LAKE

DOWNTOWN SEWER IMPROVEMENTS AND PUMP STATION
STRUCTURAL
TYPICAL GUARDRAIL DETAILS

SHEET S-506

126.42.300

FILE NAME: PROJECTS\126 - SOUTH SALT LAKE CITY\42.200 - ZELLER AND DOWNTOWN SEWER IMPROVEMENTS\CAD\2 - DOWNTOWN AND PUMP STATION\S-506 TYP GUARDRAIL DETAILS.DWG
FILE DATE: 3.6.2024 15:36:41 (MAJ)

7/04

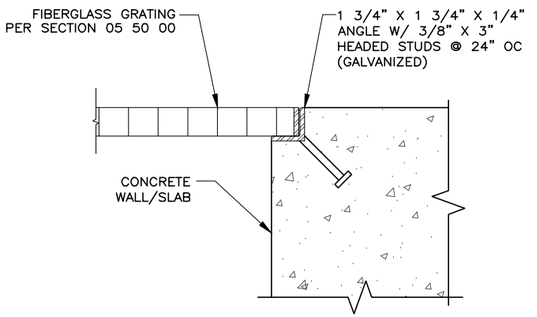


TYPICAL GRATING EMBED — A C-501 | A S-206 | A S-508

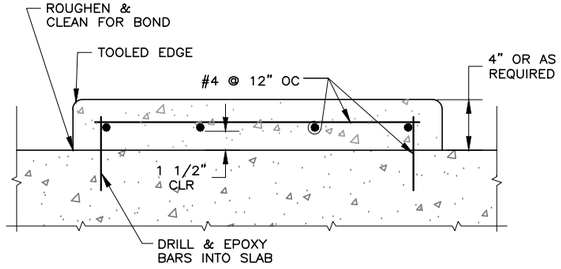


HOUSE KEEPING PAD — NTS — B – | B C-109 | B C-110 | B S-105 | B S-106

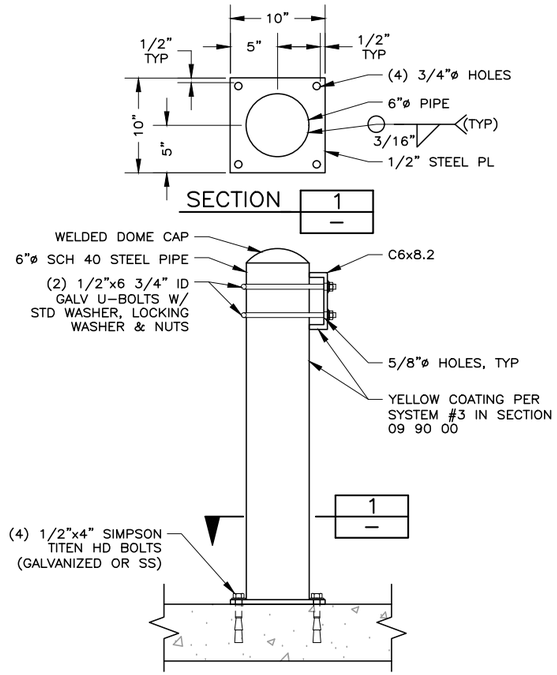


DUMPSTER BARRIER — C C-202 | C S-206

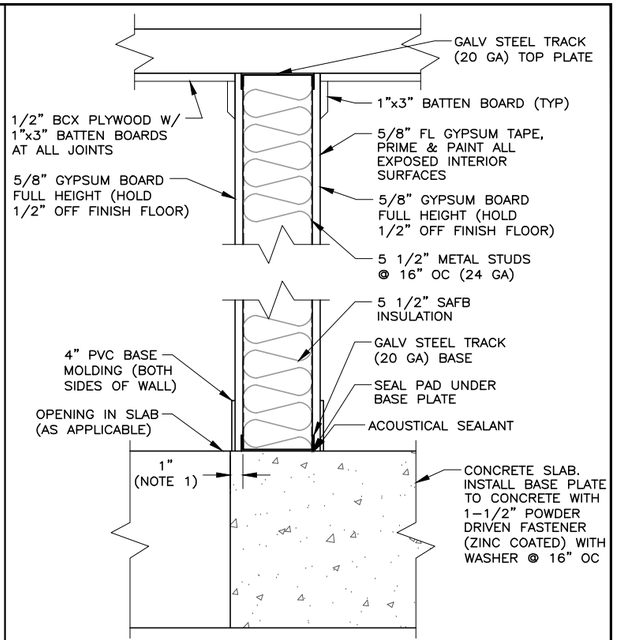


DETAIL NOTES:
1. EDGE OF STEEL FRAMING TO BE SET BACK 1" FROM EDGE OF ADJACENT OPENINGS IN CONCRETE SLAB, AS APPLICABLE.

INTERIOR FRAME WALLS — D S-105 | D S-205 | D S-207

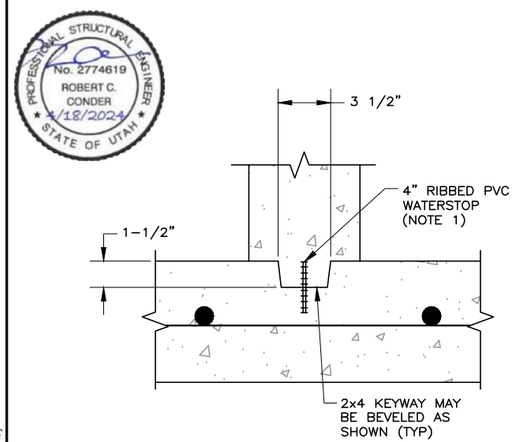


DETAIL NOTE:
1. PVC WATERSTOP SHALL BE GREENSTREAK TYPE 781 OR APPROVED EQUAL, UNO. BULBED WATERSTOP SHALL BE GREENSTREAK TYPE 702 OR APPROVED EQUAL.

TYPICAL WATERSTOP DETAIL — NTS — E –

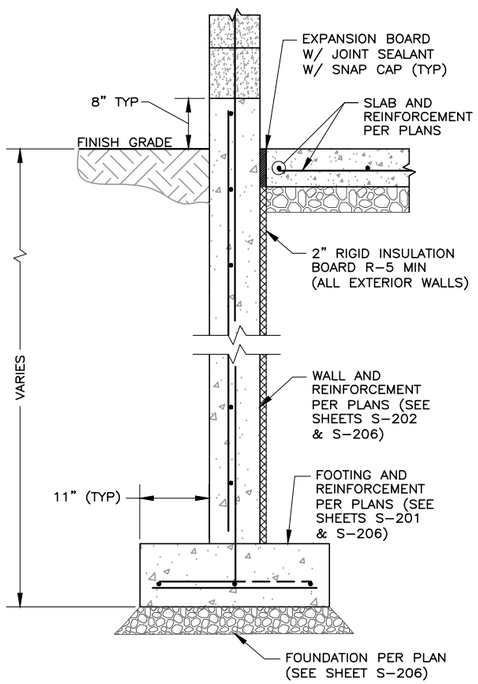


TYPICAL STRIP FOOTING — NTS — F – | F S-206

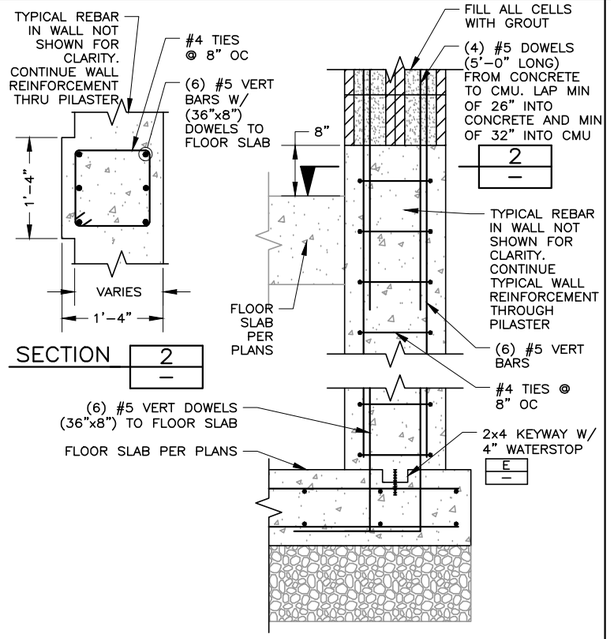


PILASTER FOUNDATION DETAIL — NTS — G – | G S-106 | G S-202 | G S-204

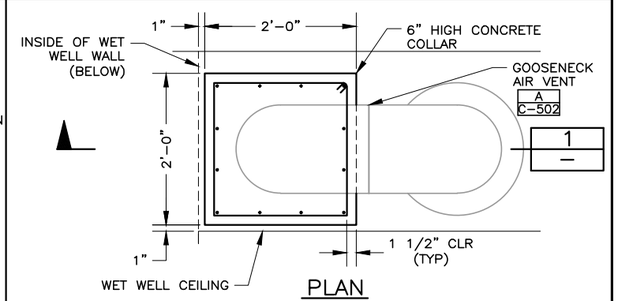


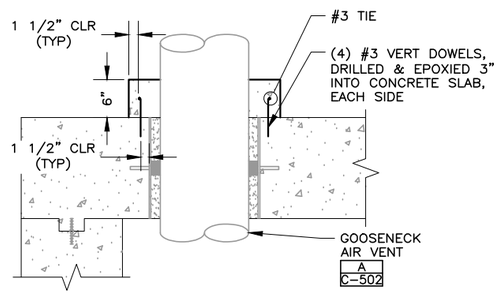


GOOSENECK AIR VENT COLLAR — NTS — H C-106 | H C-502 | H S-104

PROFESSIONAL STRUCTURAL ENGINEER — No. 2774619 — ROBERT C. CONDER — 4/18/2024 — STATE OF UTAH

LICENSED PROFESSIONAL ENGINEER — 4/19/24 — No. 5052482 — GREGORY S. TUCKER — STATE OF UTAH

FILE NAME: PROJECTS\126 - SOUTH SALT LAKE CITY\42.200 - ZELLER AND DOWNTOWN SEWER IMPROVEMENTS\CAD\2 - DOWNTOWN AND PUMP STATION\S-507 MISC STRUCTURAL DETAILS 1.DWG
FILE DATE: 4.17.2024 09:00:57 (MAJ)

HANSEN ALLEN & LUCE, Inc. ENGINEERS

| | | | | | |
|---|---|---|---|---|---|
| DESIGNED | ACS | 3 | | | |
| DRAFTED | BKC, MAJ | 2 | | | |
| CHECKED | GST | 1 | | | |
| DATE | APRIL 2024 | NO. | DATE | REVISIONS | BY / APVD. |

SCALE: NOT TO SCALE

SOUTH SALT LAKE

DOWNTOWN SEWER IMPROVEMENTS AND PUMP STATION
STRUCTURAL
MISCELLANEOUS STRUCTURAL DETAILS I

SHEET S-507

126.42.300

7/04

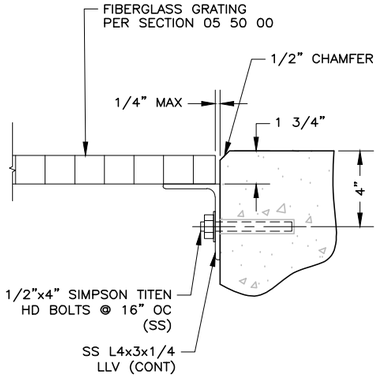


WALL MOUNTED GRATING SUPPORT

| B | B | B |
|---|---|---|
| – | C–203 | S–203 |
| B | B | |
| S–206 | S–207 | |

0 .25 .5
SCALE IN FEET

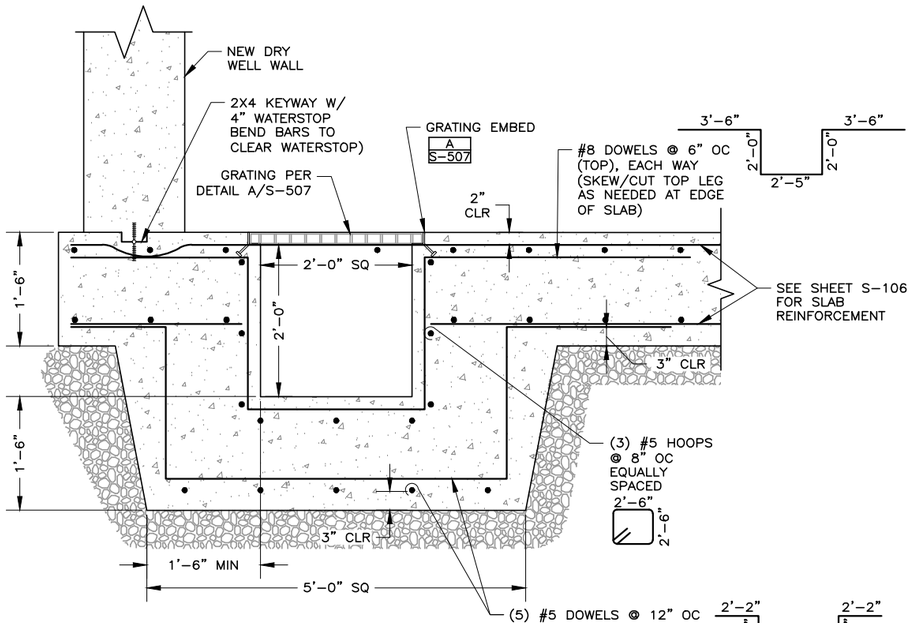


SUMP DETAIL

| C | C |
|---|---|
| C–107 | S–107 |

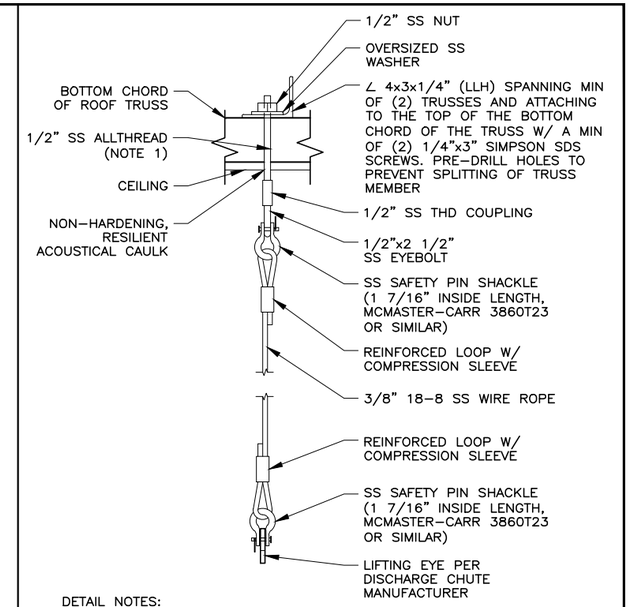


DETAIL NOTES:
1. ALLTHREAD TO BE SUSPENDED FROM ANGLE. IT IS NOT DRILLED THROUGH THE ROOF TRUSS. ROOF TRUSSES TO REMAIN INTACT.

DISCHARGE CHUTE HANGER

| D | D |
|---|---|
| C–203 | S–206 |
| D | D |
| S–207 | S–208 |

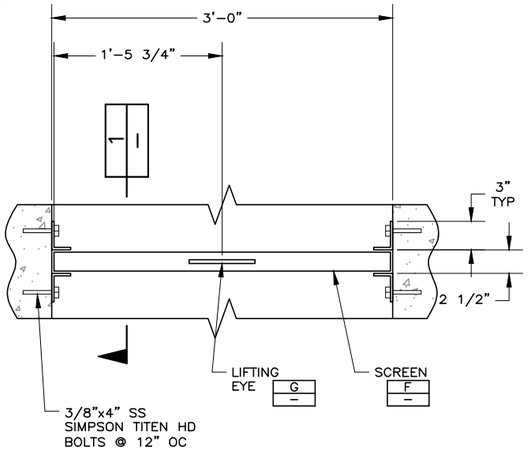


MANUAL SCREEN ASSEMBLY

| E |
|---|
| C–201 |

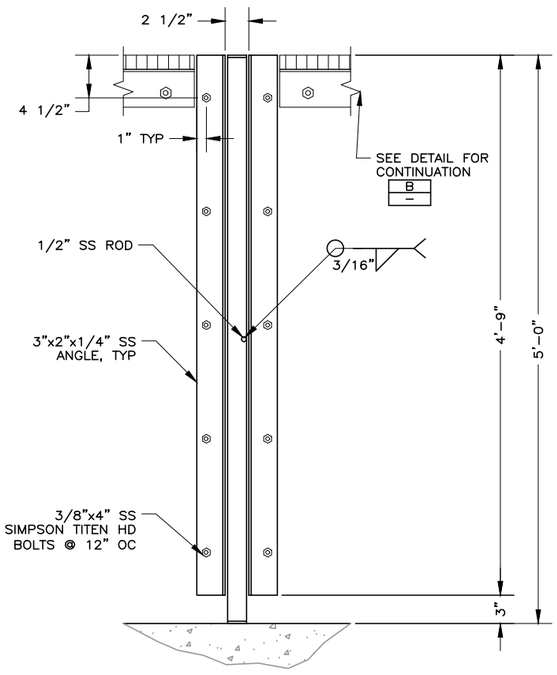


SECTION

| 1 |
|---|
| – |

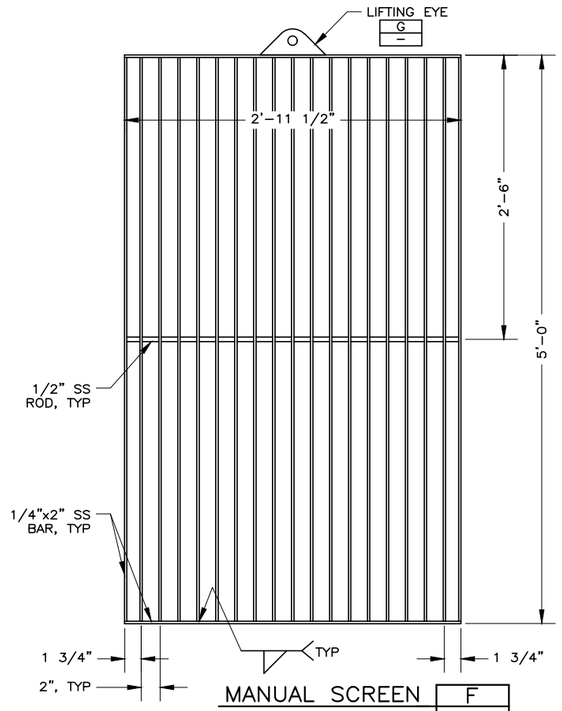


MANUAL SCREEN

| F |
|---|
| – |

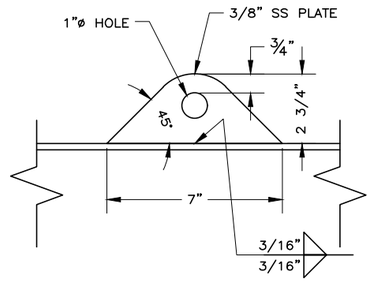


MANUAL SCREEN ASSEMBLY
LIFTING EYE

| G |
|---|
| – |

PROFESSIONAL STRUCTURAL ENGINEER
No. 2774619
ROBERT C. CONDER
4/18/2024
STATE OF UTAH

LICENSED PROFESSIONAL ENGINEER
4/19/24
No. 5052482
GREGORY S. TUCKETT
STATE OF UTAH

HANSEN ALLEN & LUCE inc ENGINEERS

| | | | | | |
|---|---|---|---|---|---|
| DESIGNED | ACS | 3 | | | |
| DRAFTED | BKC | 2 | | | |
| CHECKED | GST | 1 | | | |
| DATE | APRIL 2024 | NO. | DATE | REVISIONS | BY APVD. |

SCALE AS SHOWN

SOUTH SALT LAKE

DOWNTOWN SEWER IMPROVEMENTS AND PUMP STATION
STRUCTURAL
MISCELLANEOUS STRUCTURAL DETAILS II

SHEET S–508
126.42.300

FILE NAME: PROJECTS\126 – SOUTH SALT LAKE CITY\42.200 – ZELLER AND DOWNTOWN SEWER IMPROVEMENTS\CAD\2 – DOWNTOWN AND PUMP STATION\S–508 MISC STRUCTURAL DETAILS II.DWG
FILE DATE: 3.6.2024 - 15:39:39 (MAJ)
7/04

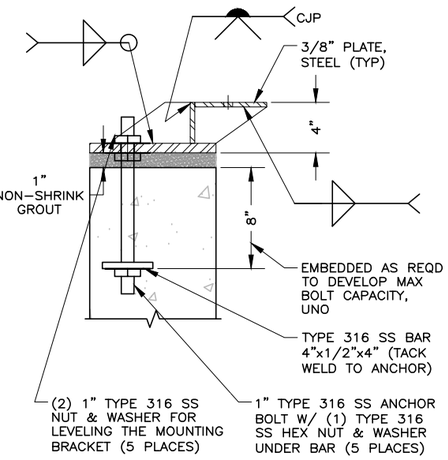


SECTION 1 / NTS — —

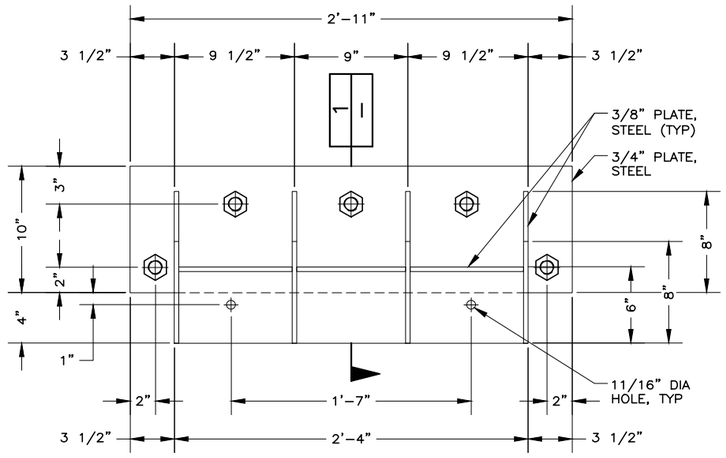


DETAIL NOTES:
1. CONTRACTOR/MANUFACTURER SHALL VERIFY THE DESIGN OF THE MOUNTING BRACKET AND ANCHORS.

## 12x10 PUMP MOUNTING BRACKET — A / S-106
NTS

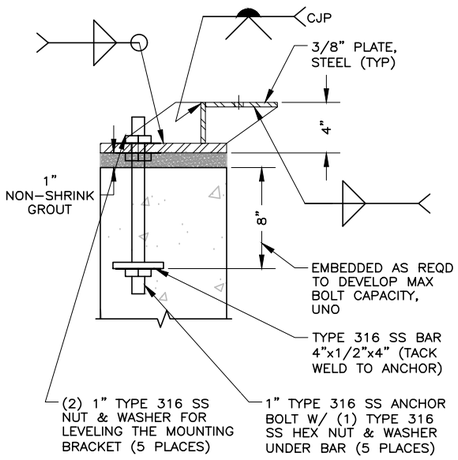


SECTION 2 / NTS — —

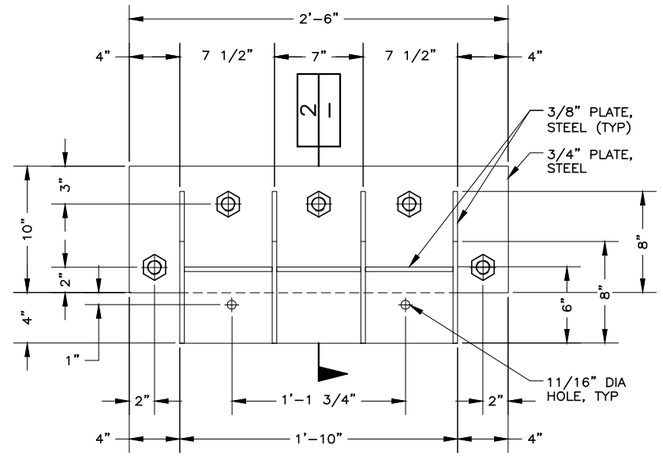


DETAIL NOTES:
1. CONTRACTOR/MANUFACTURER SHALL VERIFY THE DESIGN OF THE MOUNTING BRACKET AND ANCHORS.

## 10x6 PUMP MOUNTING BRACKET — B / S-106
NTS

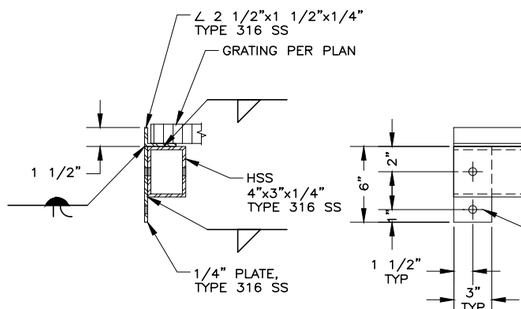


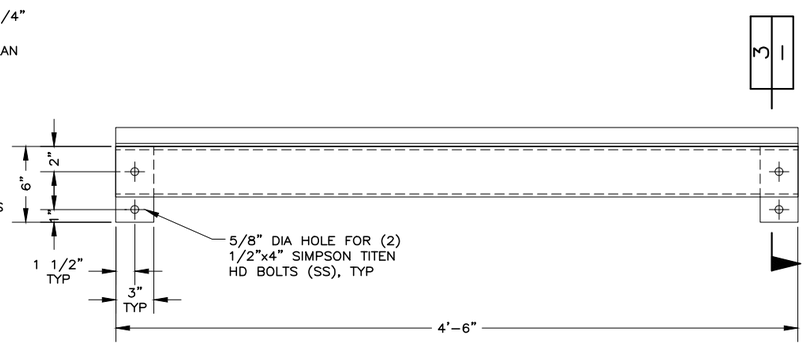


SECTION 3 / NTS — —

## FACE-MOUNTED GRATING SUPPORT BEAM — C / S-203
NTS

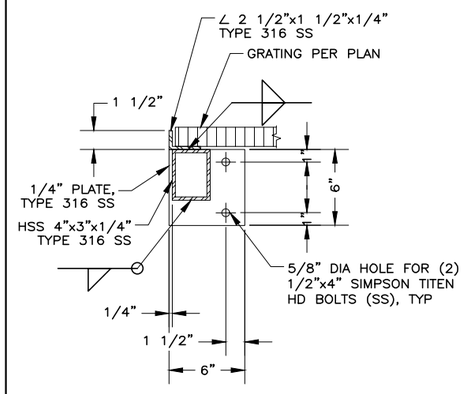


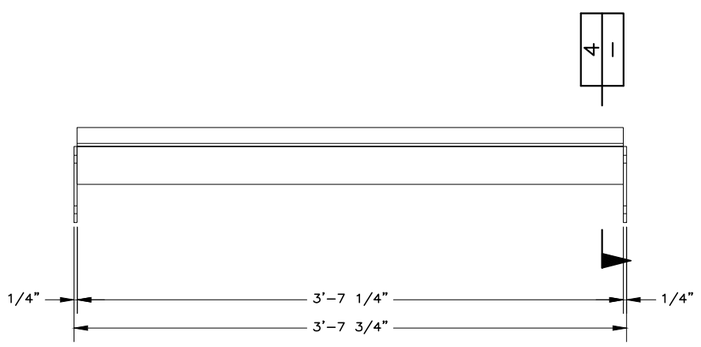


SECTION 4 / NTS — —

## GRATING SUPPORT BEAM — D / S-203
NTS

LICENSED PROFESSIONAL ENGINEER — 4/19/24 — No. 5052482 — GREGORY S. TUCKER — STATE OF UTAH

PROFESSIONAL STRUCTURAL ENGINEER — No. 2774619 — ROBERT C. CONDER — 4/18/2024 — STATE OF UTAH

| | | | | | | | |
|---|---|---|---|---|---|---|---|
| DESIGNED | ACS | 3 | | | | | |
| DRAFTED | MAJ | 2 | | | | | |
| CHECKED | GST | 1 | | | | | |
| DATE | APRIL 2024 | NO. | DATE | REVISIONS | | BY | APVD. |

HANSEN ALLEN & LUCE inc ENGINEERS

SCALE: NOT TO SCALE

SOUTH SALT LAKE

DOWNTOWN SEWER IMPROVEMENTS AND PUMP STATION
STRUCTURAL
MISCELLANEOUS STRUCTURAL DETAILS III

SHEET S-509

126.42.300

FILE NAME: PROJECTS\126 - SOUTH SALT LAKE CITY\42.200 - ZELLER AND DOWNTOWN SEWER IMPROVEMENTS\CAD\2 - DOWNTOWN AND PUMP STATION\S-509 MISC STRUCTURAL DETAILS III.DWG
FILE DATE: 3.6.2024 15:41:26 (MAJ)

7/04

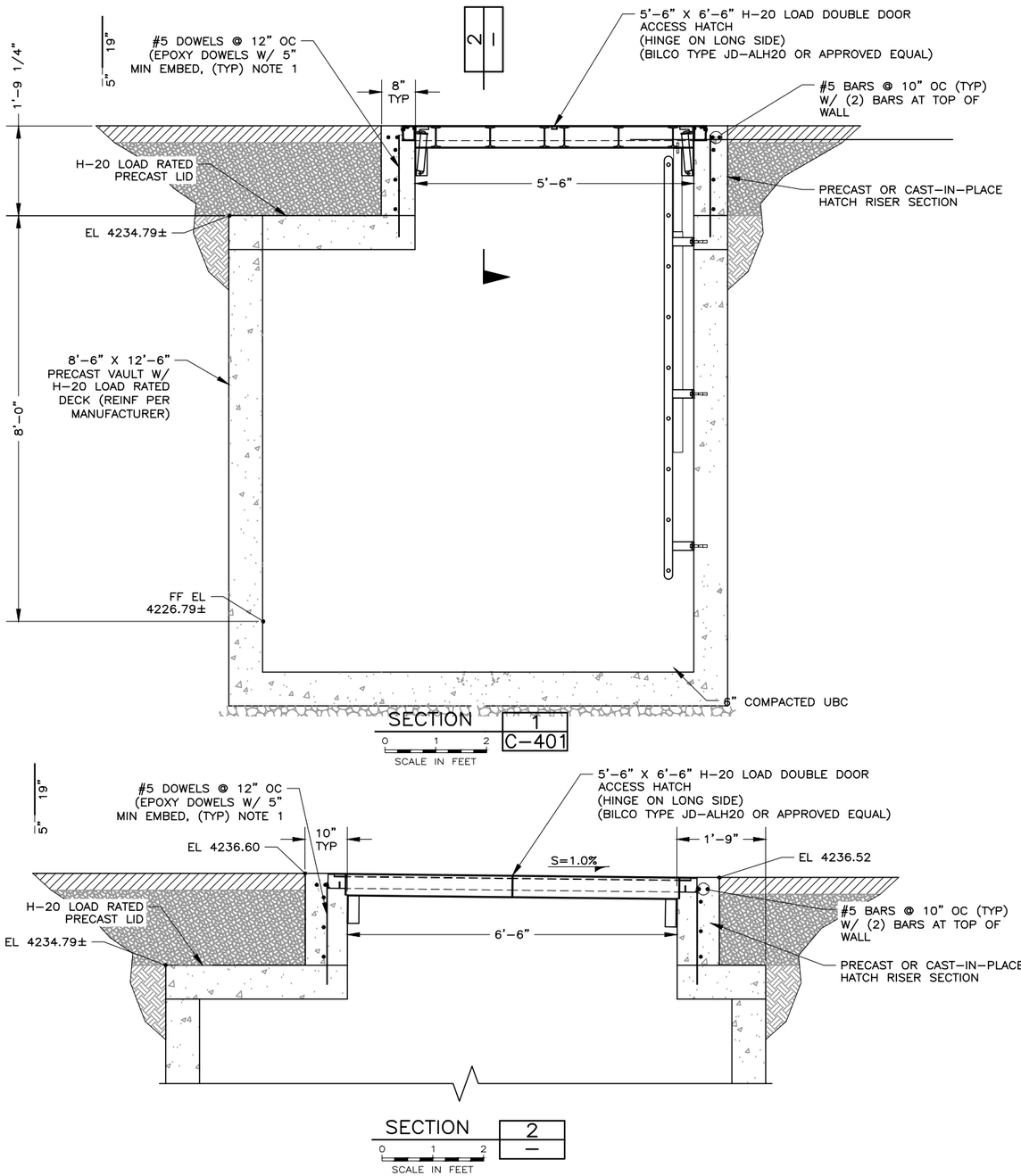





DETAIL NOTES:
1. CONTRACTOR TO PROVIDE AND INSTALL DOWELS IF MANUFACTURER DOES NOT PRE-INSTALL THE SIMILAR DOWELS FOR THE RISER SECTION.

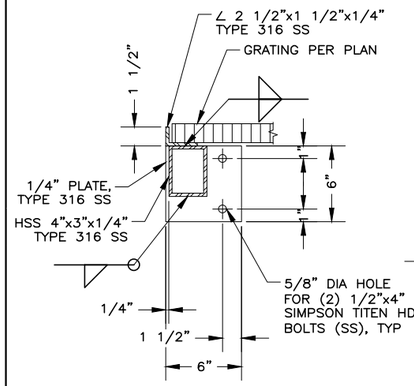


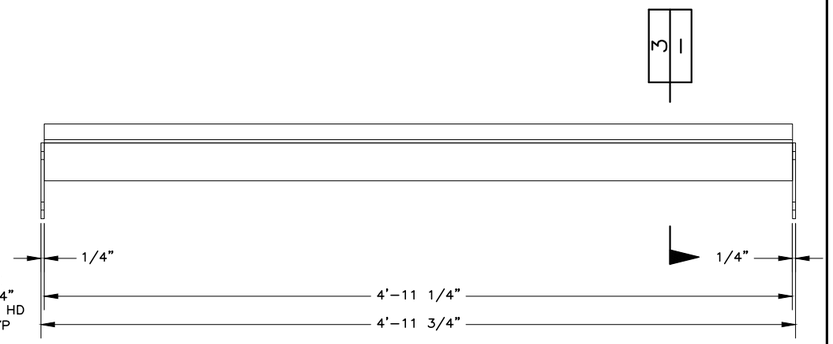


5' GRATING SUPPORT BEAM A S-203
NTS

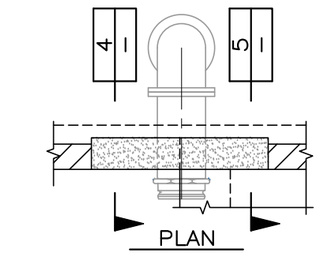


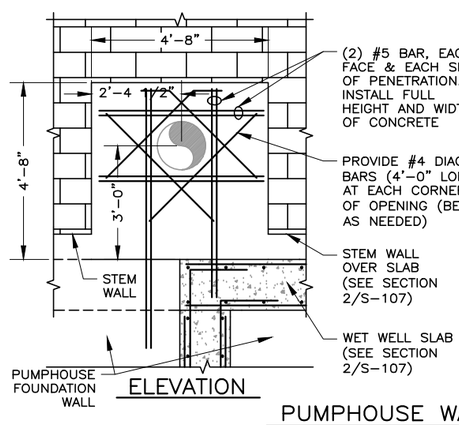


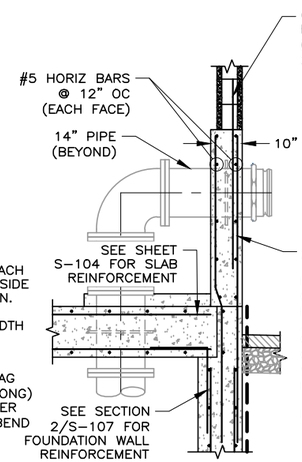


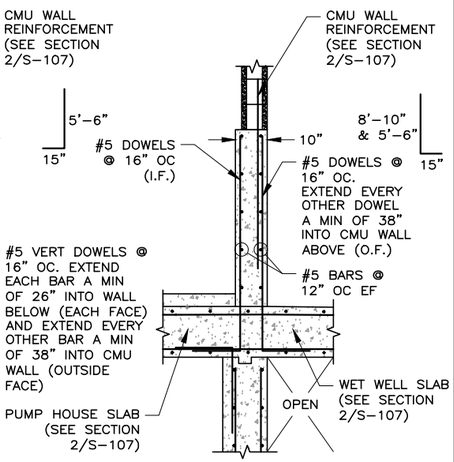


DETAIL NOTES:
1. INSTALL #5 HORIZ BAR TO LINE UP WITH BARS IN CMU WALLS. EXTEND A MIN OF 38" INTO CMU WALL.

PUMPHOUSE WALL PIPE PENETRATION B A-101 B S-104
0 2 4
SCALE IN FEET

PROFESSIONAL STRUCTURAL ENGINEER
No. 2774619
ROBERT C. CONDER
4/18/2024
STATE OF UTAH

LICENSED PROFESSIONAL ENGINEER
4/19/24
No. 5052482
GREGORY S. TIMMINS
STATE OF UTAH

HANSEN ALLEN & LUCE inc ENGINEERS

| | | | | | |
|---|---|---|---|---|---|
| DESIGNED | ACS | 3 | | | |
| DRAFTED | MAJ | 2 | | | |
| CHECKED | GST | 1 | | | |
| DATE | APRIL 2024 | NO. | DATE | REVISIONS | BY APVD. |

SCALE: AS SHOWN

SOUTH SALT LAKE

DOWNTOWN SEWER IMPROVEMENTS AND PUMP STATION
STRUCTURAL
MISCELLANEOUS STRUCTURAL DETAILS IV

SHEET S-510
126.42.300

FILE NAME: PROJECTS\126 - SOUTH SALT LAKE CITY\42.200 - ZELLER AND DOWNTOWN SEWER IMPROVEMENTS\CAD\2 - DOWNTOWN AND PUMP STATION\S-510 MISC STRUCTURAL DETAILS IV.DWG
FILE DATE: 3.15.2024 15:01:27 (MAJ)

7/04

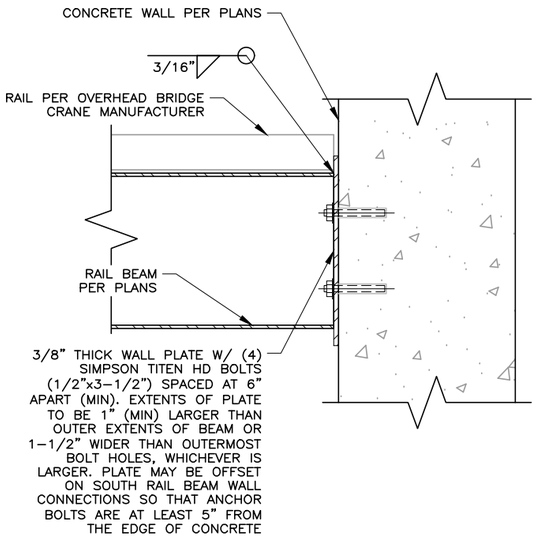


RAIL BEAM TO WALL DETAIL
NTS

| A | A |
|---|---|
| S-151 | S-152 |

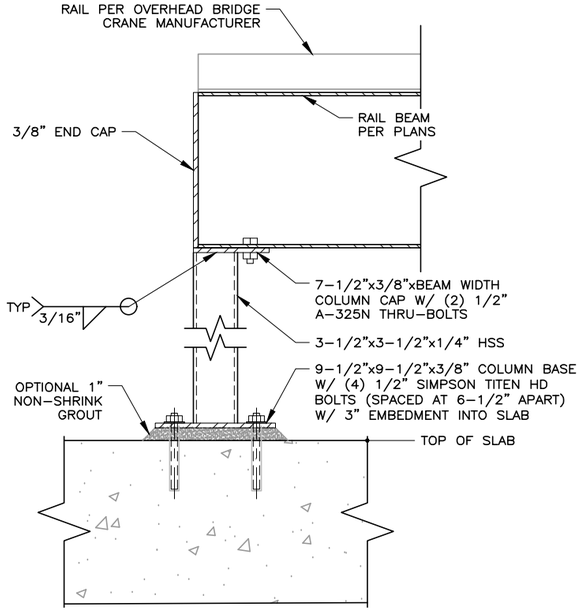


RAIL BEAM STEEL POST DETAIL
NTS

| B |
|---|
| S-152 |

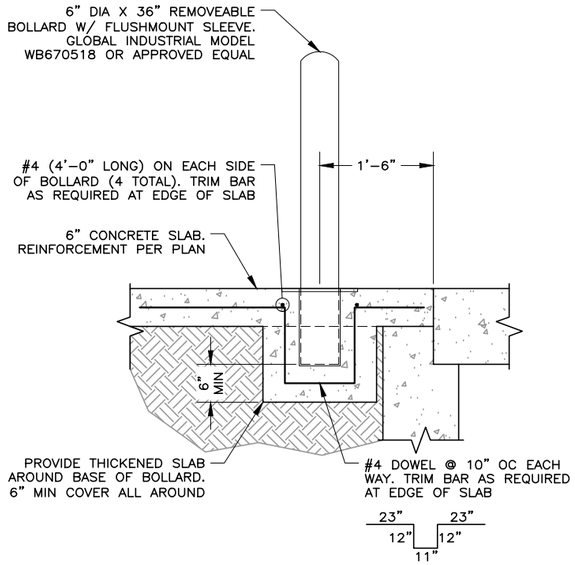


REMOVEABLE BOLLARD
NTS

| C | C |
|---|---|
| C-202 | C-203 |

| C | C | C |
|---|---|---|
| S-204 | S-205 | S-206 |

FILE NAME: PROJECTS\126 - SOUTH SALT LAKE CITY\42.200 - ZELLER AND DOWNTOWN SEWER IMPROVEMENTS\CAD\2 - DOWNTOWN AND PUMP STATION\S-511 MISC STRUCTURAL DETAILS V.DWG
FILE DATE: 4.17.2024 09:11:45 (MAJ)

PROFESSIONAL STRUCTURAL ENGINEER
No. 2774619
ROBERT C. CONDER
4/18/2024
STATE OF UTAH

LICENSED PROFESSIONAL ENGINEER
4/19/24
No. 5052482
GREGORY S. TIMOTHY
STATE OF UTAH

HANSEN ALLEN & LUCE inc
ENGINEERS

| | | | | | |
|---|---|---|---|---|---|
| DESIGNED | ACS | 3 | | | |
| DRAFTED | MAJ | 2 | | | |
| CHECKED | GST | 1 | | | |
| DATE | APRIL 2024 | NO. | DATE | REVISIONS | BY APVD. |

SCALE
NOT TO SCALE

SOUTH SALT LAKE

DOWNTOWN SEWER IMPROVEMENTS AND PUMP STATION
STRUCTURAL
MISCELLANEOUS STRUCTURAL DETAILS V

SHEET
S-511
126.42.300

7/04

## PLUMBING SYMBOL LEGEND

| SYMBOL | DESCRIPTION |
|---|---|
| | DROP IN PIPE |
| | RISE IN PIPE |
| | VALVE IN RISE |
| | UNION |
| | GAS SHUT OFF VALVE (GAS COCK) |
| | BALL VALVE |
| | CAP |
| WHA | GAS TYPE WATER HAMMER ARRESTOR |
| | THERMOMETER |
| PRV | PRESSURE REDUCING VALVE – (PRV) |
| FD RD | FLOOR DRAIN, FLOOR SINK OR ROOF DRAIN |
| FCO | FLOOR CLEAN OUT |
| WCO | WALL CLEAN OUT |
| CO | CLEAN OUT |
| VTR | VENT THROUGH ROOF |
| | COLD WATER |
| | DOMESTIC HOT WATER |
| | SEWER OR WASTE |
| | VENT |
| G | GAS (NATURAL GAS) |
| | SAFETY OR RELIEF VALVE |
| (FC #) | FIXTURE COUNT |

## GENERAL PLUMBING NOTES

1. CONTRACTOR SHALL VERIFY ALL PLUMBING FIXTURES, EQUIPMENT REQUIREMENTS AND LOCATIONS, AND ALL RELATED UTILITIES WITH THE MECHANICAL AND ARCHITECTURAL PLANS AND SPECIFICATIONS AND SHALL PROVIDE ALL SERVICES AS REQUIRED.
2. ALL WALL–HUNG PLUMBING FIXTURES SHALL BE SECURELY ATTACHED TO AND SUPPORTED BY FLOOR–MOUNTED CARRIERS OF ALL–METAL CONSTRUCTION. FIXTURE HANGERS OR ARMS SHALL BE SUPPORTED FREE OF THE FINISHED WALL. HANGERS SHALL BE BY WADE, SMITH, JOSAM, OR ZURN.
3. EACH INDIVIDUAL FIXTURE SUPPLY SHALL BE PROVIDED WITH A CHROME–PLATED STOP VALVE WITH HAND WHEEL. VALVE SHALL BE BALL TYPE, QUARTER TURN AS APPROVED BY ENGINEER. STOPS SHALL BE ON BOTH HOT AND COLD WATER LINES.
4. FIXTURES AND ACCESSORIES SHALL BE AS SPECIFIED. EACH ITEM SHALL BE COMPLETE WITH CHROME–PLATED BRASS TRIM. SEE PLUMBING FIXTURE SCHEDULE.
5. CAULK WITH SILICONE COMPOUND AROUND ALL FIXTURES AT INTERFACE WITH WALLS AND/OR FLOOR.
6. ALL PLUMBING SHALL BE DONE IN ACCORDANCE WITH THE LATEST ADOPTED EDITION OF THE UTAH PLUMBING CODE AND/OR LOCAL ORDINANCES.
7. ALL DOMESTIC COLD AND HOT WATER PIPING IS TO BE INSULATED PER THE SCHEDULE ON THIS DRAWING.

## PLUMBING FIXTURE SCHEDULE

| SYM | DESCRIPTION | COLD | HOT | TEPID | TRAP | WASTE | VENT | REMARKS |
|---|---|---|---|---|---|---|---|---|
| P–1 | SINK – 16 GAUGE STAINLESS STEEL, SINGLE COMPARTMENT, STAND ALONE, 21" x 25–13/16" x 43–3/4" TALL, NO DRAINBOARDS, ELKAY MODEL 14–1C16X20–0X. PROVIDE WITH WALL MOUNTED FAUCET, QUARTER TURN CERAMIC DISC HANDLES, 8" CENTERSET, ELKAY MODEL LK940BP03L2H. | 1/2" | 1/2" | – | INT | 2" | 2" | – |

## GAS FIRED WATER HEATER

| SYMBOL | MANUFACTURER AND MODEL NO | SERVICE | TYPE | FUEL TYPE/ PRESSURE | INPUT CAPACITY (BTUH) | VOLTS/ø/HZ | WATER TEMP IN/OUT | OVERALL SIZE | VENT CONNECTION SIZE | OPERATING WEIGHT (LBS) | REMARKS |
|---|---|---|---|---|---|---|---|---|---|---|---|
| DWH–1 | RINNAI CU160I | DOMESTIC HOT WATER | FULLY CONDENSING | NATURAL GAS | 160,000 | 120/1/60 | 40/120 | 18.5"x31.3"H | 3" PVC INTAKE 3" PVC EXHAUST | 62 | PROVIDE VENT TERMINATION KIT |

## EXPANSION TANKS

| SYMBOL | TANK VOLUME GALLONS | ACCEPT VOLUME GALLONS | AMTROL MODEL | ARRANGEMENT | DUTY | REMARKS |
|---|---|---|---|---|---|---|
| DET–1 | 2.0 | 0.9 | ST–5 | VERTICAL | DOMESTIC COLD WATER SYSTEM | |

## PIPE MATERIAL SCHEDULE

| SYMBOL | DESCRIPTION | PIPE MATERIAL | INSULATION/COVERING |
|---|---|---|---|
| DCW | DOMESTIC COLD WATER | COPPER TYPE L | SEE DETAIL 7/P5.1 |
| DHW | DOMESTIC HOT WATER | COPPER TYPE L | 1" FIBERGLASS WITH ASJ |
| GAS | NATURAL GAS | BLACK STEEL, SCHEDULE 40 THREADED | NONE |
| WASTE | SANITARY WASTE | PVC SOLID CORE SCHEDULE 40 WITH DWV FITTINGS | NONE |
| VENT | VENT | PVC SOLID CORE SCHEDULE 40 WITH DWV FITTINGS | NONE |

## THERMOSTATIC MIXING VALVE SCHEDULE

| SYMBOL | MANUFACTURER AND MODEL NO | LOCATION | FLOW RATE (GPM) | ALLOWABLE PRESSURE DIFFERENTIAL (PSI) | OUTLET HOT WATER TEMP. (°F) | INLET SIZE | OUTLET SIZE | ACCESSORIES AND REMARKS |
|---|---|---|---|---|---|---|---|---|
| MV–1 | POWERS – LFG480 | BELOW HAND SINKS | 0.5–2.0 | 5 | 105° | 1/2" | 1/2" | ASSE 1070 |

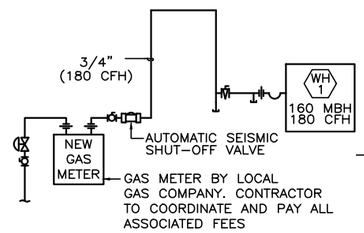


GAS FLOW DIAGRAM
SCALE: NONE

### GAS DESIGN NOTES

| | |
|---|---|
| LENGTH: | 20' |
| DESIGN MBH: | 160 |
| BTU / CU FT: | 890 |
| DESIGN CFH: | 180 |
| BUILDING PRESSURE: | 4 OZ |
| BRANCH SIZE: | 3/4" |

FILE NAME: PROJECTS\126 – SOUTH SALT LAKE CITY\42.200 – ZELLER AND DOWNTOWN SEWER IMPROVEMENTS\CAD\2 – DOWNTOWN AND PUMP STATION\P–001 SCHEDULES.DWG
FILE DATE: 3.7.2024 09:49:50 (MAJ)

HANSEN ALLEN & LUCE inc ENGINEERS

LICENSED PROFESSIONAL ENGINEER
4/19/24
No. 5052482
GREGORY S. THOMAS
STATE OF UTAH

| | | | | | |
|---|---|---|---|---|---|
| DESIGNED | ACS | 3 | | | |
| DRAFTED | MAJ | 2 | | | |
| CHECKED | GST | 1 | | | |
| DATE | APRIL 2024 | NO. | DATE | REVISIONS | BY / APVD. |

SCALE: NONE

SOUTH SALT LAKE

DOWNTOWN SEWER IMPROVEMENTS AND PUMP STATION
PLUMBING
SCHEDULES

SHEET P–001

126.42.300

7/04

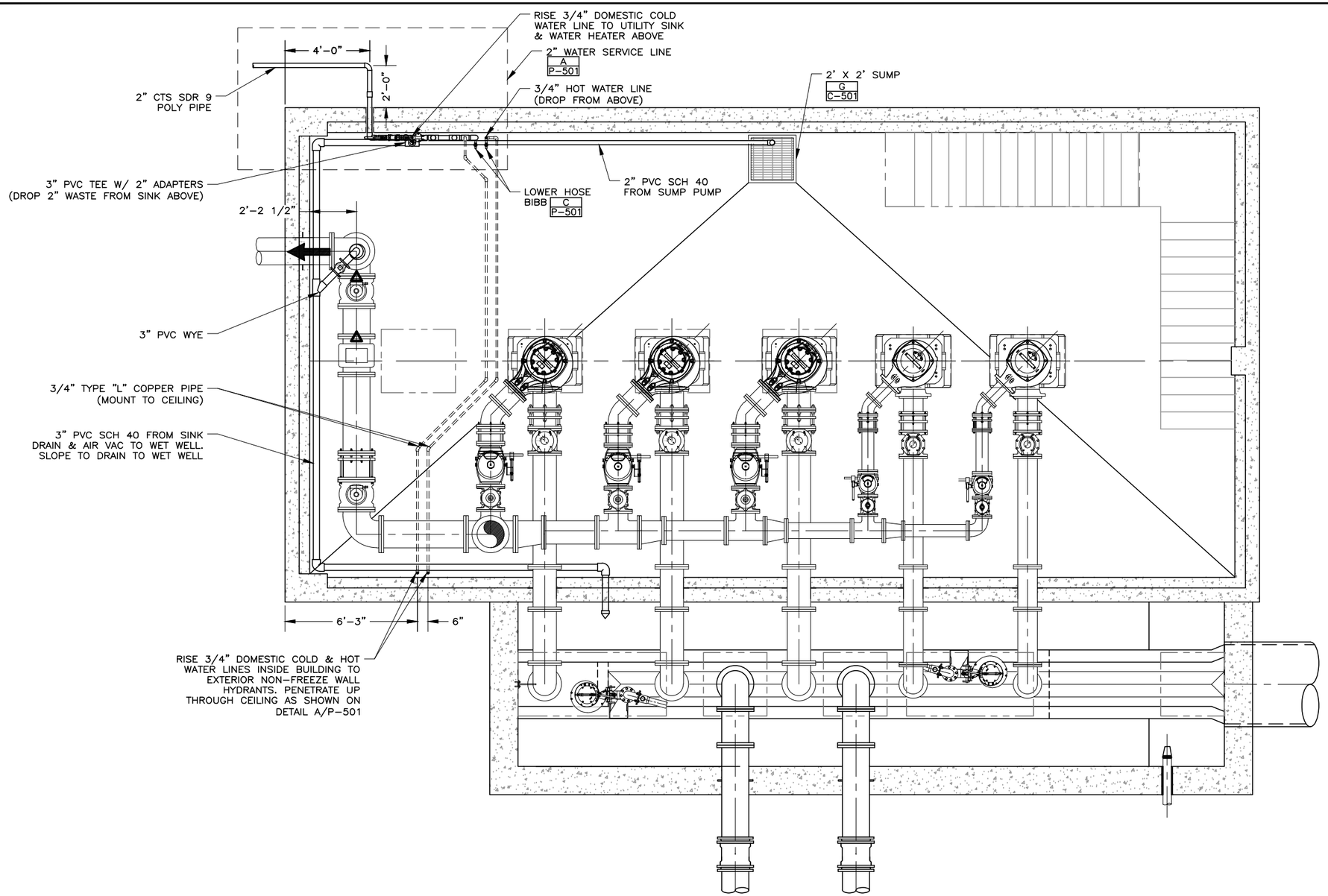


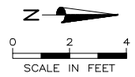


PLAN

FILE NAME: PROJECTS\126 - SOUTH SALT LAKE CITY\42.200 - ZELLER AND DOWNTOWN SEWER IMPROVEMENTS\CAD\2 - DOWNTOWN AND PUMP STATION\P-101 DRY & WET WELL PLAN.DWG
FILE DATE: 3.6.2024 16:01:22 (MAJ)

7/04

HANSEN ALLEN & LUCE inc ENGINEERS

LICENSED PROFESSIONAL ENGINEER
4/19/24
No. 5052482
GREGORY S. THOMAS
STATE OF UTAH

| | | | | | | |
|---|---|---|---|---|---|---|
| DESIGNED | ACS | 3 | | | | |
| DRAFTED | MAJ | 2 | | | | |
| CHECKED | GST | 1 | | | | |
| DATE | APRIL 2024 | NO. | DATE | REVISIONS | BY | APVD. |

SCALE: AS SHOWN

SOUTH SALT LAKE

DOWNTOWN SEWER IMPROVEMENTS AND PUMP STATION
PLUMBING
PUMPHOUSE DRY & WET WELL PLAN

SHEET
P-101
126.42.300

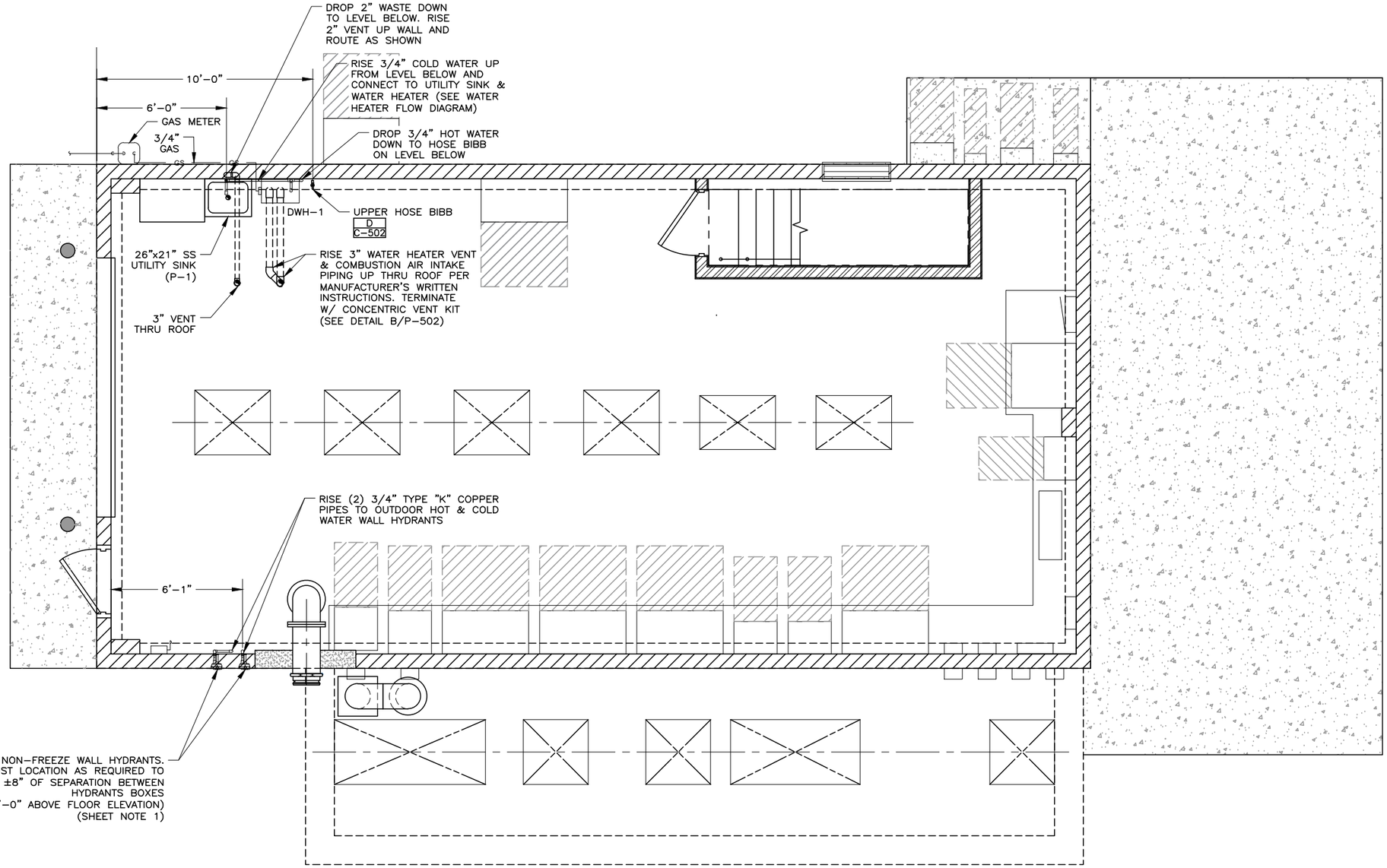


PLAN

GENERAL SHEET NOTES:

1. SHIFT SOUTH WALL HYDRANT AS REQUIRED TO PROVIDE 8-INCH MIN DISTANCE BETWEEN HYDRANTS, SUCH THAT A SOLID CELL OF CMU CAN BE INSTALLED BETWEEN THEM.

N

0 2 4
SCALE IN FEET

FILE NAME:PROJECTS\126 - SOUTH SALT LAKE CITY\42.200 - ZELLER AND DOWNTOWN SEWER IMPROVEMENTS\CAD\2 - DOWNTOWN AND PUMP STATION\P-102 PUMPHOUSE BLDG FLOOR PLAN.DWG
FILE DATE: 3.6.2024 17:04:09 (MAJ)

LICENSED PROFESSIONAL ENGINEER
4/19/24
No. 5052482
GREGORY S. THOMAS
STATE OF UTAH

HANSEN ALLEN & LUCE Inc
ENGINEERS

| | | | | | | |
|---|---|---|---|---|---|---|
| DESIGNED | ACS | 3 | | | | |
| DRAFTED | MAJ | 2 | | | | |
| CHECKED | GST | 1 | | | | |
| DATE | APRIL 2024 | NO. | DATE | REVISIONS | BY | APVD. |

SCALE: AS SHOWN

SOUTH SALT LAKE

DOWNTOWN SEWER IMPROVEMENTS AND PUMP STATION
PLUMBING
PUMPHOUSE BUILDING FLOOR PLAN

SHEET P-102
126.42.300

7/04

FILE NAME: PROJECTS\126 - SOUTH SALT LAKE CITY\42.200 - ZELLER AND DOWNTOWN SEWER IMPROVEMENTS\CAD\2 - DOWNTOWN AND PUMP STATION\P-201 SCREEN BUILDING TRENCH PLAN.DWG
FILE DATE: 3.6.2024 17:29:29 (MAJ)

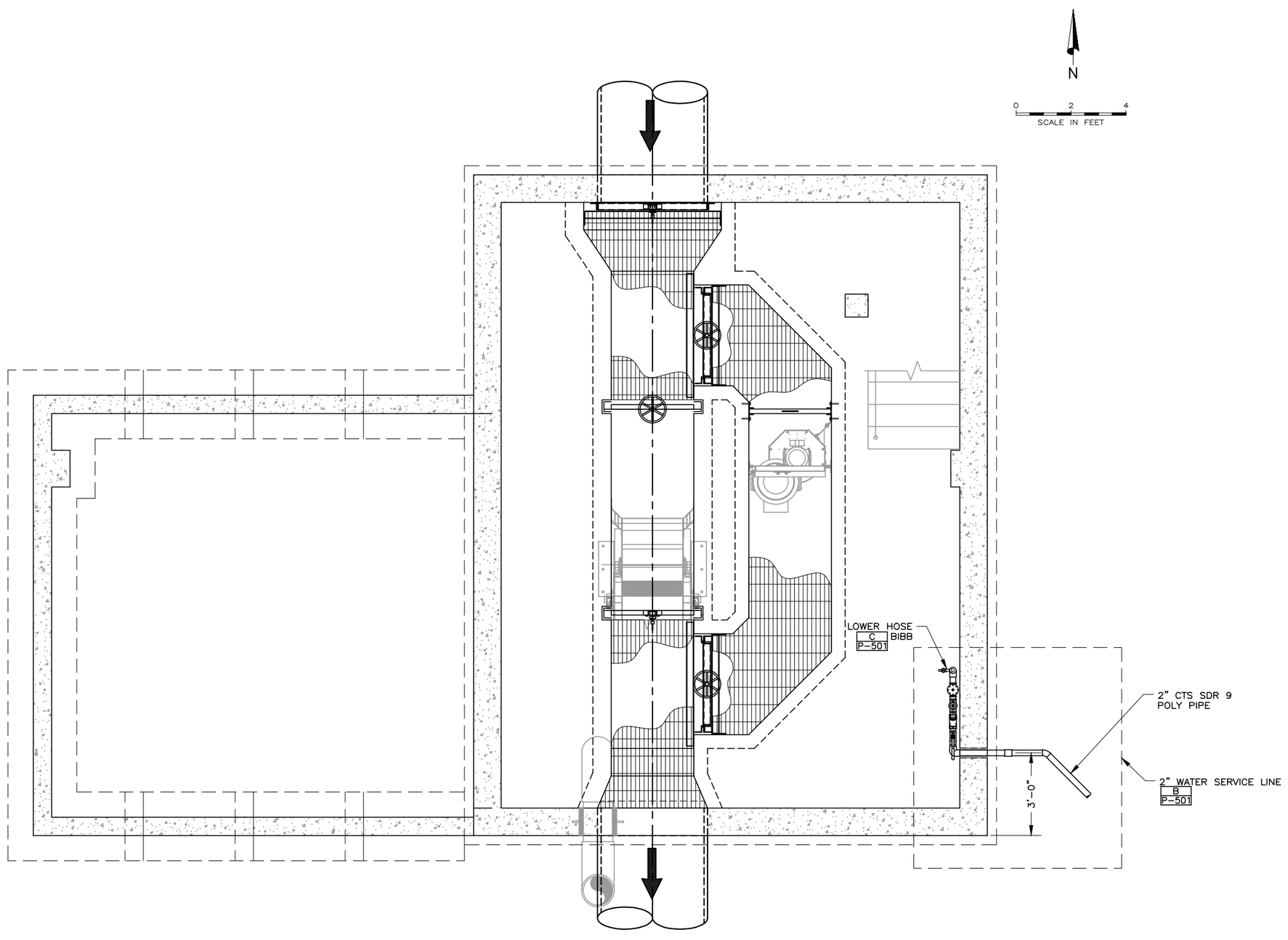


LICENSED PROFESSIONAL ENGINEER
4/19/24
No. 5052482
GREGORY S. THOMAS
STATE OF UTAH

HANSEN ALLEN & LUCE, INC. ENGINEERS

| | |
|---|---|
| DESIGNED | ACS |
| DRAFTED | MAJ |
| CHECKED | GST |
| DATE | APRIL 2024 |

| NO. | DATE | REVISIONS | BY | APVD. |
|---|---|---|---|---|
| 3 | | | | |
| 2 | | | | |
| 1 | | | | |

SCALE: AS SHOWN

SOUTH SALT LAKE

DOWNTOWN SEWER IMPROVEMENTS AND PUMP STATION
PLUMBING
SCREEN BUILDING TRENCH PLAN

SHEET P-201

126.42.300

7/04

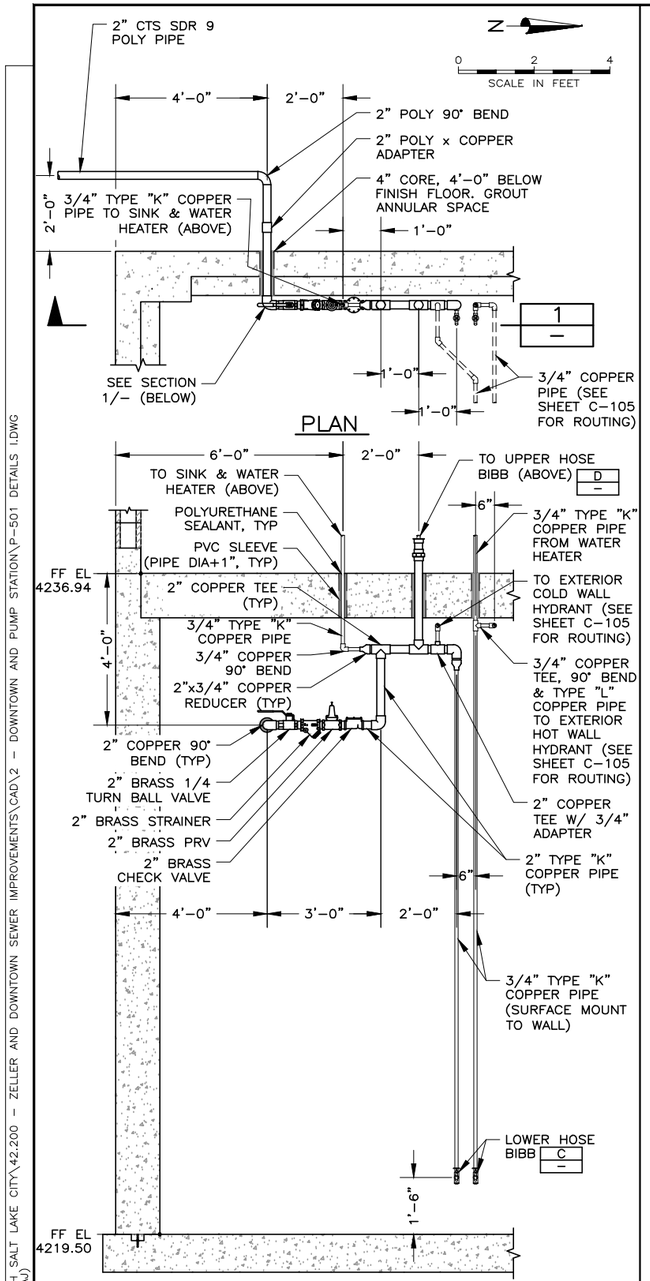


SECTION 1 / -

DETAIL NOTES:

1. PIPE TO BE PLACED TO PREVENT ANY STRUCTURAL REINFORCEMENT IN CONCRETE FROM BEING CUT.

2" WATER SERVICE LINE @ PUMP HOUSE PLAN — A / P-101

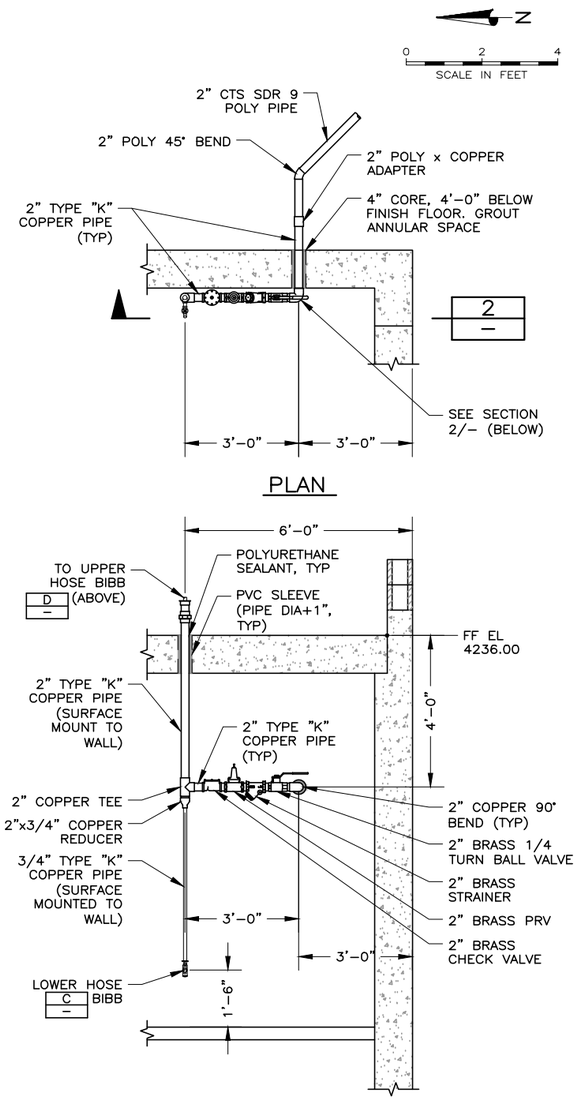


SECTION 2 / -

DETAIL NOTES:

1. PIPE TO BE PLACED TO PREVENT ANY STRUCTURAL REINFORCEMENT IN CONCRETE FROM BEING CUT.

2" WATER SERVICE LINE @ SCREEN BLDG PLAN — B / P-201

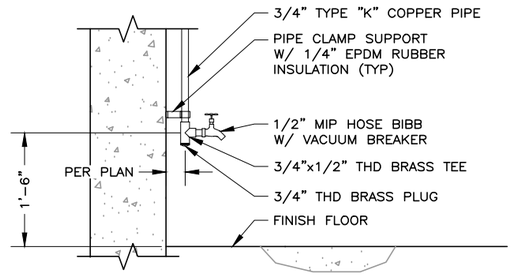


LOWER HOSE BIBB — C / - | C / P-101 | C / P-201

NTS

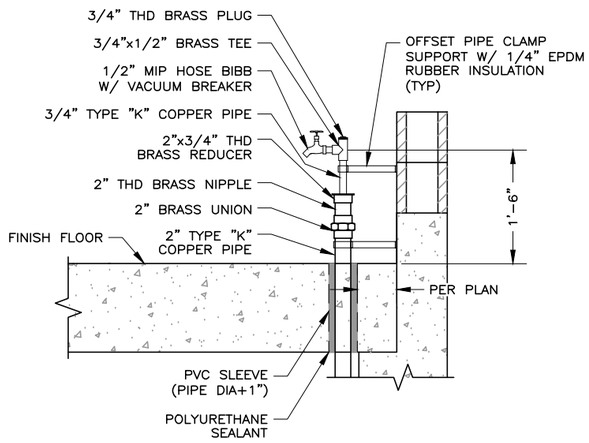


UPPER HOSE BIBB — D / - | D / P-102

NTS

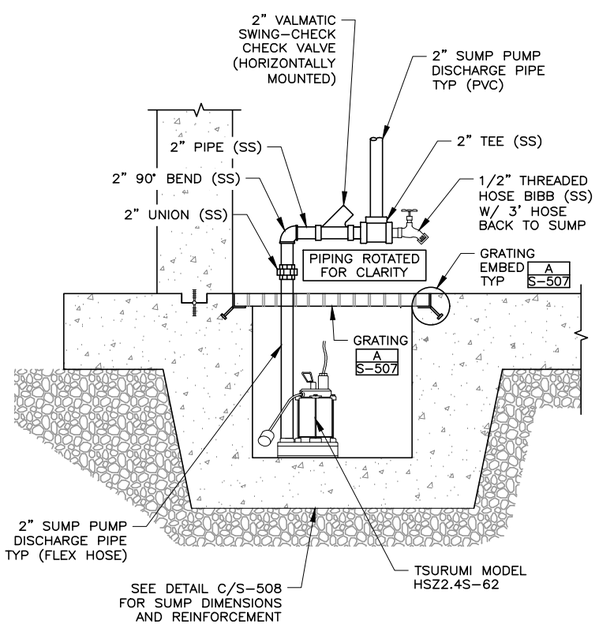


SUMP DETAIL — E / P-101 | E / P-102

LICENSED PROFESSIONAL ENGINEER
4/19/24
No. 5052482
GREGORY S. THOMAS
STATE OF UTAH

HANSEN ALLEN & LUCE inc ENGINEERS

| | | | | | |
|---|---|---|---|---|---|
| DESIGNED | ACS | 3 | | | |
| DRAFTED | TPB, MAJ | 2 | | | |
| CHECKED | GST | 1 | | | |
| DATE | APRIL 2024 | NO. | DATE | REVISIONS | BY / APVD. |

SCALE: AS SHOWN

SOUTH SALT LAKE

DOWNTOWN SEWER IMPROVEMENTS AND PUMP STATION
PLUMBING
DETAILS I

SHEET P-501

126.42.300

FILE NAME: PROJECTS\126 - SOUTH SALT LAKE CITY\42.200 - ZELLER AND DOWNTOWN SEWER IMPROVEMENTS\CAD\2 - DOWNTOWN AND PUMP STATION\P-501 DETAILS I.DWG
FILE DATE: 3.7.2024 09:14:20 (MAJ)
7/04

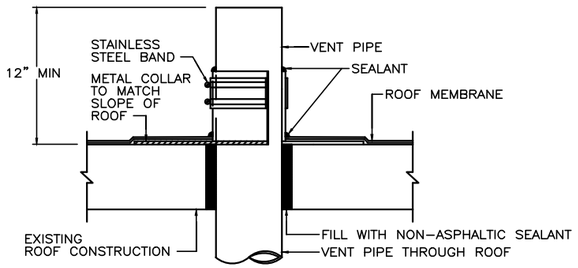


VENT THRU ROOF DETAIL — A
NTS —

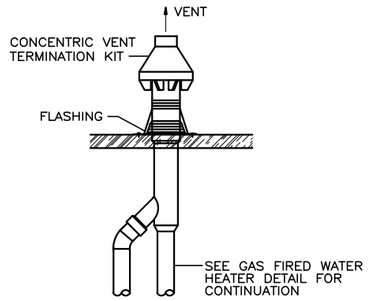


CONCENTRIC VENT KIT DETAIL — B
NTS —

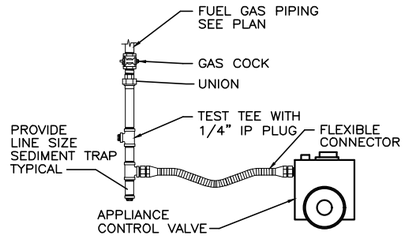


GAS CONNECTION TO APPLIANCE / EQUIPMENT DETAIL
(WITHOUT GAS PRESSURE REGULATOR)

GAS CONNECTION DETAIL — C
NTS —

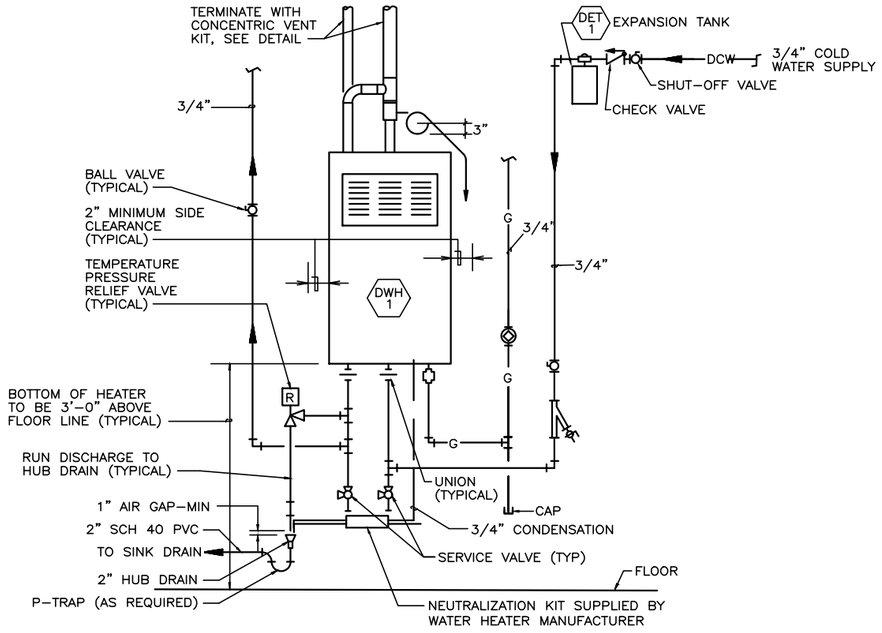


TANKLESS WATER HEATER DETAIL — D
NTS —

LICENSED PROFESSIONAL ENGINEER
4/19/24
No. 5052482
GREGORY S. THOMAS
STATE OF UTAH

HANSEN ALLEN & LUCE inc ENGINEERS

| | | | | | |
|---|---|---|---|---|---|
| DESIGNED ACS | 3 | | | | |
| DRAFTED MAJ | 2 | | | | |
| CHECKED GST | 1 | | | | |
| DATE APRIL 2024 | NO. | DATE | REVISIONS | BY | APVD. |

SCALE: AS SHOWN

SOUTH SALT LAKE

DOWNTOWN SEWER IMPROVEMENTS AND PUMP STATION
PLUMBING
DETAILS II

SHEET P-502
126.42.300

FILE NAME: PROJECTS\126 - SOUTH SALT LAKE CITY\42.200 - ZELLER AND DOWNTOWN SEWER IMPROVEMENTS\CAD\2 - DOWNTOWN AND PUMP STATION\P-502 DETAILS II.DWG
FILE DATE: 3.7.2024 10:18:18 (MAJ)

7/04

## WALL MOUNTED AIR CONDITIONING UNIT

| SYMBOL | COOLING (1) | | MIN. EER | ENTERING AIR | | NOM. ACFM | ESP | ELECTRICAL | | | | | | | | BARD MODEL | UNIT WEIGHT (LBS) | REMARKS |
|---|---|---|---|---|---|---|---|---|---|---|---|---|---|---|---|---|---|---|
| | STANDARD RATING TOTAL MBH | STANDARD RATING SENS. MBH | | °Fdb | °Fwb | | | HEATER (KW) | VOLTS | HERTZ | PHASE | SUPPLY FAN HP | CONDENSER FAN HP | MCA | MOCP | | | |
| WAC-1 | 78 | 66 | 10.0 | 75 | 62 | 2850 | 0.35 | 9 | 460 | 60 | 3 | 2 | 3 | 21 | 30 | W090APC09EP | 1300 | FURNISH UNIT WITH PGDX CONTROLLER, 2" MERV 8 FILTERS, FULL ECONOMIZER, SUPPLY REGISTER, AND RETURN GRILLE. |

NOTES: (1) 95° F O.A.T.

SEE SPECIFICATION SECTION 236100

## VENTILATION FAN

| SYMBOL | AIR FLOW CFM | TOTAL STATIC PRESS IN WC @ ALTITUDE | FAN MAX RPM | FAN ELECTRICAL | | | | BHP | DRIVE | SONES | LWA | COOK MODEL | DUTY | REMARKS |
|---|---|---|---|---|---|---|---|---|---|---|---|---|---|---|
| | | | | VOLTS | HERTZ | PHASE | MOTOR HP | | | | | | | |
| REF-1 | 1,400 | 0.5 | 2770 | 115 | 60 | 5/8 | 1 | 0.5 | DIRECT | 29 | 91 | 100R28D (VF2) | LOWER PUMP RM | (1) |

NOTES: (1) EC MOTOR WITH EXTERNAL 2 SPEED CONTROLLER

SEE SPECIFICATION SECTION 238200

## ELECTRIC UNIT HEATER SCHEDULE

| SYMBOL | BTUH INPUT | NOMINAL CFM | ELECTRICAL DATA | | | | | MARKEL MODEL | DUTY | REMARKS |
|---|---|---|---|---|---|---|---|---|---|---|
| | | | VOLTS | HZ | PHASE | AMPS | KW | | | |
| EUH-1 | 34,130 | 1500 | 480 | 60 | 3 | 12.7 | 10 | HLA-16 | SCREENINGS RM | SURFACE MOUNTED, INTEGRAL THERMOSTAT. PROVIDE WITH CLASS 1 DIV. 11 RATING. |
| EUH-2 | 34,130 | 1500 | 480 | 60 | 3 | 12.7 | 10 | HLA-16 | SCREENINGS RM | SURFACE MOUNTED, INTEGRAL THERMOSTAT. PROVIDE WITH CLASS 1 DIV. 11 RATING. |
| EUH-3 | 34,130 | 700 | 480 | 60 | 3 | 12.1 | 10 | P3P5510T | LOWER PUMP RM | SURFACE MOUNTED, INTEGRAL THERMOSTAT. |

SEE SPECIFICATION SECTION 237600

## FILTER SECTION

| SYMBOL | FILTER SIZE | FILTER THICKNESS | FILTER TYPE | FARR MODEL | DUTY | NO. AND SIZE OF FILTERS | REMARKS |
|---|---|---|---|---|---|---|---|
| FS-1 | 36"x24" | 2" | PLEATED | 30-30 | ODOR CONTROL | (2)18"x24" | SLIDE-IN FILTER RACK |
| FS-2 | 36"x24" | 2" | PLEATED | 30-30 | LOWER PUMP ROOM INTAKE | (2)18"x24" | SLIDE-IN FILTER RACK |

SEE SPECIFICATION SECTION 239000

## LOUVER

| SYMBOL | APPROXIMATE SIZE | DUTY | RUSKIN MODEL | REMARKS |
|---|---|---|---|---|
| L-1 | 36"x24" | ODOR CONTROL | ELF6375DX | - |
| L-2 | 36"x24" | LOWER PUMP ROOM INTAKE | ELF6375DX | - |

SEE SPECIFICATION SECTION 233700

## HVAC SYMBOL LEGEND

| | | | |
|---|---|---|---|
| | RETURN AIR OR EXHAUST DIRECTION | | SUPPLY DUCT (CROSS SECTION) |
| | OPPOSED BLADE DAMPER | | RETURN AIR OR EXHAUST DUCT (CROSS SECTION) |
| | PARALLEL BLADE DAMPER | | ROUND DUCT (CROSS SECTION) |
| O.A. | OUTSIDE AIR | 24"x12" | DUCT SIZE, INSIDE CLEAR DIMENSION IN INCHES |
| S.A. | SUPPLY AIR | | DROP OR RISE IN SUPPLY DUCT |
| E.A. | EXHAUST AIR | | SUPPLY AIR OR OUTSIDE AIR DIRECTION |
| V.A. | VENTILATION AIR | (T) | THERMOSTAT |
| | | (S) | WALL SENSOR |

## GENERAL NOTES

1. EQUIPMENT MANUFACTURERS AND MODEL NUMBERS ON DRAWING SCHEDULES ARE PROVIDED FOR REFERENCE ONLY IN ORDER TO AID THE CONTRACTOR ESTABLISH SIZES. DO NOT LIMIT EQUIPMENT SELECTION TO SHOWN MAKES. APPROVED EQUAL MANUFACTURERS WILL BE ACCEPTED. REFERENCE DIV. 23 SPECIFICATIONS FOR OTHER APPROVED MANUFACTURERS.
2. SIZES OF EQUIPMENT PADS, FLOOR, AND WALL PENETRATIONS ARE GIVEN FOR REFERENCE ONLY AND SHALL BE FIELD VERIFIED PRIOR TO FABRICATION OR ORDERING EQUIPMENT. COORDINATE ALL FLOOR / WALL / ROOF PENETRATIONS WITH STRUCTURAL ENGINEER.
3. THE HVAC CONTRACTOR SHALL BE RESPONSIBLE TO COORDINATE WITH THE GENERAL CONTRACTOR. THE FINAL SIZE AND LOCATION OF ROOF AND WALL OPENINGS REQUIRED FOR THE HVAC EQUIPMENT INSTALLATION.
4. REFERENCE ELECTRICAL CONTROL LADDER DIAGRAMS FOR EXHAUST FAN WIRING DIAGRAM.
5. ALL DUCTWORK IN PROCESS AREAS TO BE STAINLESS STEAL, ALUMINUM, OR PVC COATED AND LINED GALVANIZED DUCT.

PROFESSIONAL ENGINEER
6647772-2202
KARSON DAVID HALVERSON
04/01/2024
STATE OF UTAH

HANSEN ALLEN & LUCE inc ENGINEERS

HEATH Engineering Company

| | | | | | |
|---|---|---|---|---|---|
| DESIGNED KDH | 3 | | · | | |
| DRAFTED KGM | 2 | | | | |
| CHECKED KDH | 1 | | | | |
| DATE MAY 26, 2022 | NO. | DATE | REVISIONS | BY | APVD. |

SCALE ·

SOUTH SALT LAKE

DOWNTOWN SEWER IMPROVEMENTS AND PUMP STATION
HVAC SCHEDULES
AND DETAILS

SHEET H-001

126.42.300

I:\2005801 - DWG\HVAC\SHEET\20658 - H-001.dwg, 4/19/2024 4:40:08 PM, Heath Engineering co/GJE

# DRAWING NOTES

1. 14"x14" STAINLESS STEEL EXHAUST DUCT UP TO LEVEL ABOVE. SUPPORT DUCT RISE PER SMACNA GUIDLINES. FIELD COORDINATE EXACT LOCATION OF DUCT RISER. SEE SECTION FOR ADDITIONAL DETAILS.
2. MOUNT UNIT HEATER AT HEIGHT AS RECOMMENDED BY MANUFACTURER. FIELD VERIFY EXACT UNIT HEATER LOCATION.
3. HONEYWELL THERMOSTAT MODEL T775A2009

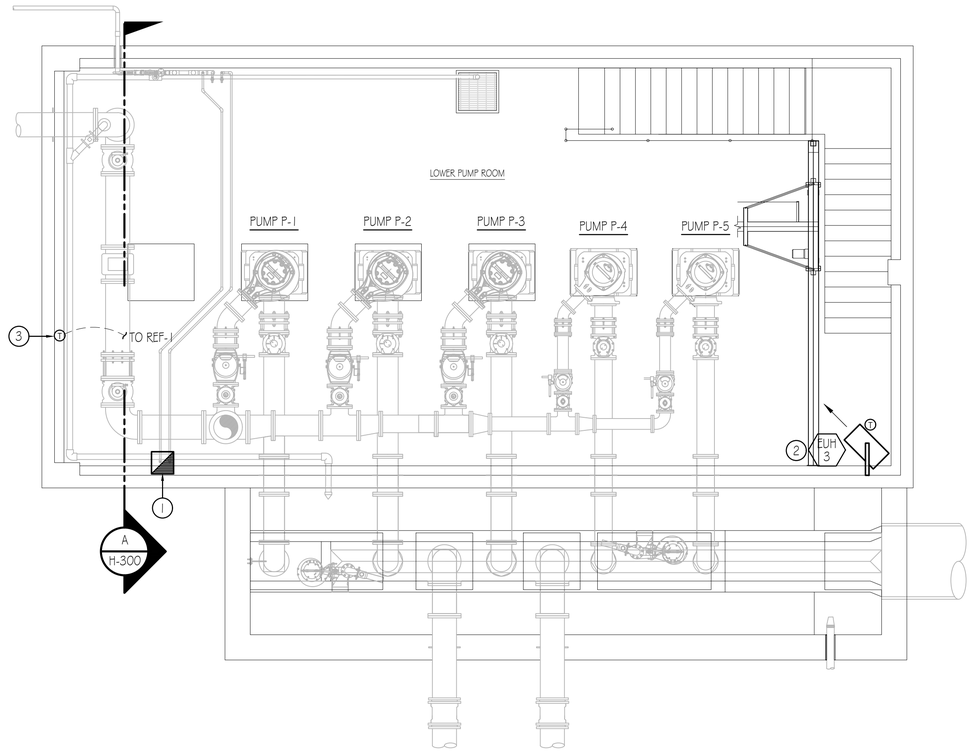


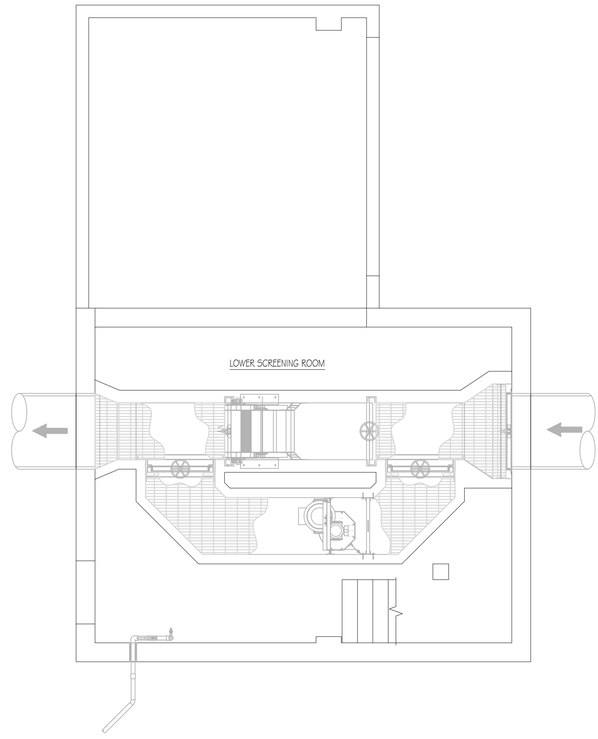


## LOWER LEVEL HVAC PLAN

SCALE: 1/4"=1'-0"

5 0 10

1
H-100

N

PROFESSIONAL ENGINEER
6647772-2202
KARSON
DAVID
HALVERSON
04/19/2024
STATE OF UTAH

| | | | | | | | |
|---|---|---|---|---|---|---|---|
| HANSEN ALLEN & LUCE inc ENGINEERS | HEATH Engineering Company | DESIGNED KDH | 3 | | · | | |
| | | DRAFTED KGM | 2 | | | | |
| | | CHECKED KDH | 1 | | | | |
| | | DATE MAY 26, 2022 | NO. | DATE | REVISIONS | BY | APVD. |

SCALE
·

SOUTH SALT LAKE

DOWNTOWN SEWER IMPROVEMENTS AND PUMP STATION
HVAC
DRY PIT PLAN

SHEET
H-100
126.42.300

I:\20085\01 - DWG\HVAC\SHEET\20085 - H-100.dwg, 4/19/2024 4:40:14 PM, Heath Engineering csa\GJE

# DRAWING NOTES

1. MOUNT UNIT HEATER AT HEIGHT AS RECOMMENDED BY MANUFACTURER. FIELD VERIFY EXACT UNIT HEATER LOCATION.
2. BOTTOM OF LOUVER TO BE 24" ABOVE GRADE. FIELD COORDINATE EXACT LOCATION.
3. 14"x14" STAINLESS STEEL EXHAUST DUCT UP FROM LEVEL BELOW. OFFSET AS SHOWN AND CONTINUE UP TO REF-1 ON ROOF. TRANSITION AS REQUIRED AND CONNECT TO REF-1. SUPPORT DUCT RISE PER SMACNA GUIDLINES. FIELD COORDINATE EXACT LOCATION OF DUCT RISER. SEE SECTION FOR ADDITIONAL DETAILS.
4. SEE SECTION FOR WAC-1 INSTALLATION NOTES.
5. HONEYWELL THERMOSTAT MODEL T775A2009.
6. REFERENCE CIVIL DRAWINGS FOR ODOR CONTROL DESIGN.

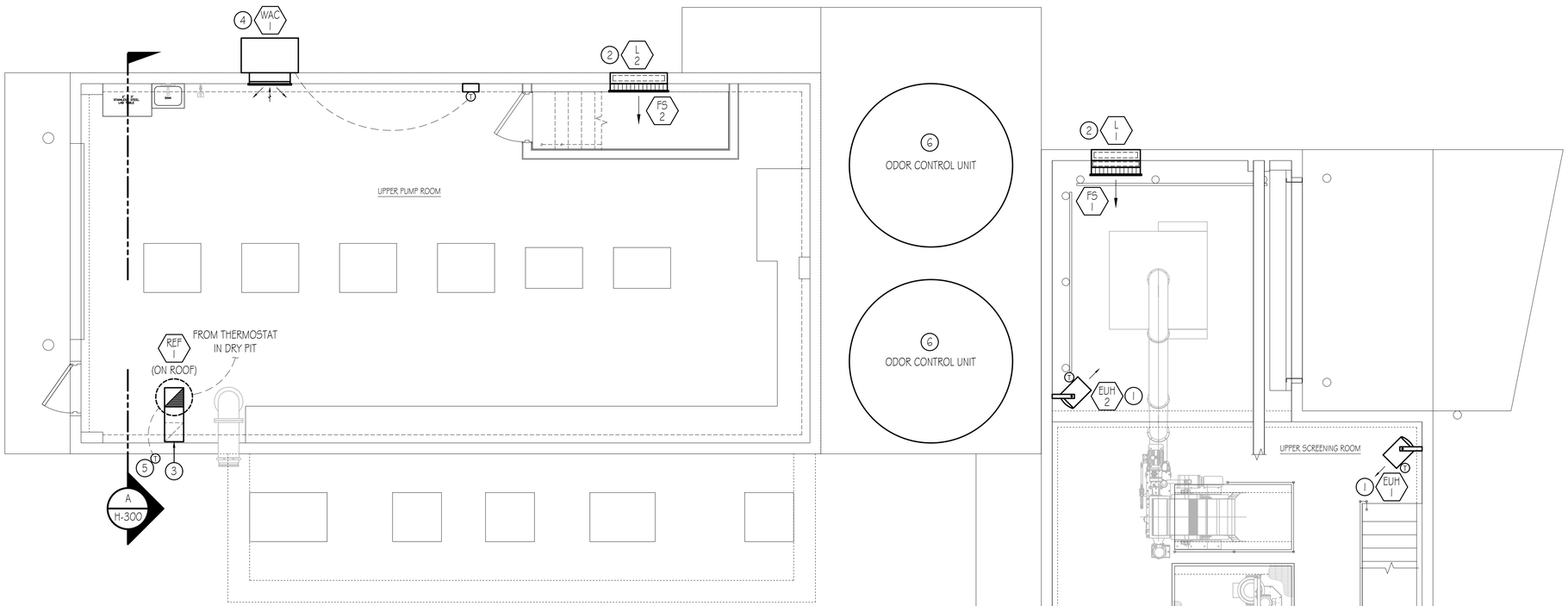


## MAIN LEVEL HVAC PLAN

SCALE: 1/4"=1'-0"

1 H-100

5 0 10

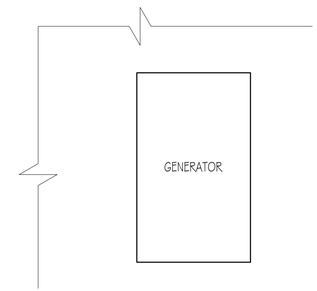


PROFESSIONAL ENGINEER
6647712-2202
KARSON DAVID HALVERSON
04/19/2024
STATE OF UTAH

| | | | | | | | |
|---|---|---|---|---|---|---|---|
| HANSEN ALLEN & LUCE inc ENGINEERS | HEATH Engineering Company | DESIGNED KDH | 3 | | | | |
| | | DRAFTED KGM | 2 | | | | |
| | | CHECKED KDH | 1 | | | | |
| | | DATE MAY 26, 2022 | NO. | DATE | REVISIONS | BY | APVD. |

SCALE .

SOUTH SALT LAKE

DOWNTOWN SEWER IMPROVEMENTS AND PUMP STATION
HVAC
TOP FLOOR PLAN

SHEET H-101

126.42.300

I:\20058\01 - DWG\HVAC\SHEET\20058 - H-101.dwg, 4/19/2024 4:40:18 PM, Heath Engineering co\GJE

## DRAWING NOTES

1. SECURELY ANCHOR AIR CONDITIONING UNIT TO WALL AND SUPPORT STRUCTURE PROVIDED BY THE GENERAL CONTRACTOR. ANCHOR SUPPORT STRUCTURE ON A CONCRETE PAD. HVAC CONTRACTOR TO PROVIDE ENGINEERED DRAWINGS FOR REVIEW AND APPROVAL PRIOR TO INSTALLATION. INSTALL UNIT PER MANUFACTURER'S REQUIREMENTS.
2. PROVIDE SLEEVES IN WALL FOR DUCTWORK PENETRATIONS. SEE DETAIL.
3. MOUNT TOP OF SUPPLY AIR DIFFUSER AT 10' -/+ ABOVE THE MAIN FLOOR.
4. MOUNT BOTTOM OF UNIT WITH MINIMUM OF 2' CLEARANCE TO CONCRETE PAD.

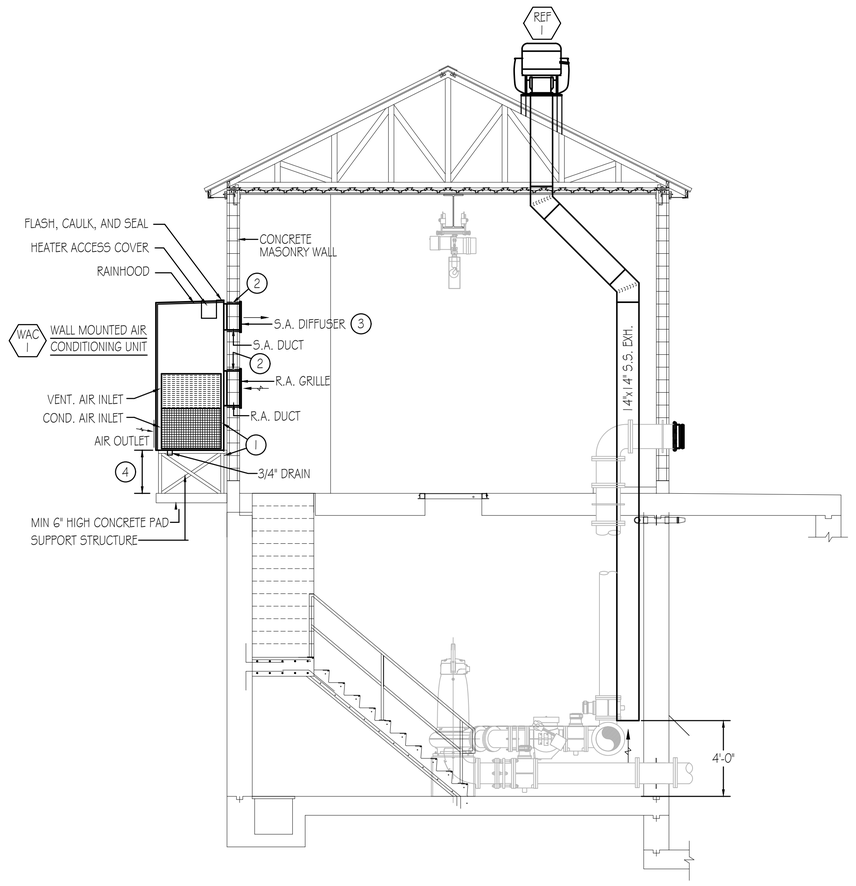


PUMP ROOM HVAC SECTION

SCALE: 1/4"=1'-0"

5 0 10

A H-300


PROFESSIONAL ENGINEER
6647772-2202
KARSON DAVID HALVERSON
04/19/2024
STATE OF UTAH


| | | | | | | | |
|---|---|---|---|---|---|---|---|
| HANSEN ALLEN & LUCE inc ENGINEERS | HEATH Engineering Company | DESIGNED KDH | 3 | | · | | |
| | | DRAFTED KGM | 2 | | | | |
| | | CHECKED KDH | 1 | | | | |
| | | DATE MAY 26, 2022 | NO. | DATE | REVISIONS | BY | APVD. |

SCALE ·

SOUTH SALT LAKE

DOWNTOWN SEWER IMPROVEMENTS AND PUMP STATION
HVAC
BUILDING SECTIONS

SHEET H-300

126.42.300


I:\2005801 - DWG\HVAC\SHEET\2005S - H-300.dwg, 4/19/2024 4:40:22 PM, Heath Engineering co/GJE

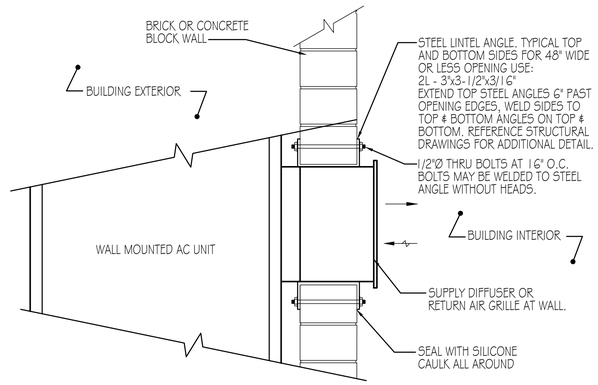


## DUCT PENETRATION DETAIL

SCALE: NONE — 6 / H-501

| DIMENSION OF LONGEST SIDE, (INCHES) | SHEET METAL GAGE (ALL FOUR SIDES) | MINIMUM REINFORCING ANGLE SIZE & MAXIMUM LONGITUDINAL SPACING BETWEEN TRANSVERSE JOINTS &/OR INTERMEDIATE REINFORCING | TRANSVERSE REINFORCING * AT JOINTS: MIN H, IN. | DRIVE SLIP / PLAIN S SLIP — RECOM-MENDED GAGE | HEMMED S SLIP — RECOM-MENDED GAGE | ALT. BAR SLIP — RECOM-MENDED GAGE | REIN-FORCED BAR SLIP — RECOM-MENDED GAGE | BAR SLIP / ANGLE SLIP — RECOM-MENDED GAGE | BAR SLIP / ANGLE SLIP — REINFORCED ANGLE SIZE | STD. SEAM / ANGLE REINFORCED STD. SEAM — REINFORCED ANGLE SIZE | POCKET LOCK / ANGLE REINFORCED POCKET LOCK — RECOM-MENDED GAGE | POCKET LOCK / ANGLE REINFORCED POCKET LOCK — REINFORCED ANGLE SIZE |
|---|---|---|---|---|---|---|---|---|---|---|---|---|
| UP THRU 12 | 24 | NONE REQ. | 1 | 26 | 26 | 24 | 24 | 24 | NOT REQ. | NOT REQ. | 24 | NOT REQ. |
| 13-18 | 24 | NONE REQ. | 1 | 24 | 24 | 24 | 24 | 24 | NOT REQ. | NOT REQ. | 24 | NOT REQ. |
| 19-30 | 24 | 1x1x1/8" @60in. | 1 | - | 24 | 24 | 24 | 24 | NOT REQ. | NOT REQ. | 24 | NOT REQ. |
| 31-42 | 22 | 1x1x1/8" @60in. | 1 | - | - | 22 | 22 | 22 | NOT REQ. | NOT REQ. | 22 | NOT REQ. |
| 43-54 | 22 | 1-1/2"x1-1/2"x1/8" @60in. | 1-1/2 | - | - | 22 | 22 | 22 | 1-1/2"x1-1/2"x1/8" | NOT REQ. | 22 | NOT REQ. |
| 55-60 | 20 | 1-1/2"x1-1/2"x1/8" @60in. | 1-1/2 | - | - | - | 22 | 22 | 1-1/2"x1-1/2"x1/8" | NOT REQ. | 22 | NOT REQ. |
| 61-84 | 20 | 1-1/2"x1-1/2"x1/8" @60in. | 1-1/2 | - | - | - | 22 | 22 | 1-1/2"x1-1/2"x1/8" | 1-1/2"x1-1/2"x1/8" | 22 | 1-1/2"x1-1/2"x1/8" |

* TRANSVERSE REINFORCING SIZE IS DETERMINED BY DIMENSION OF SIDE TO WHICH ANGLE IS APPLIED.

## SHEETMETAL DUCT CONSTRUCTION DETAIL

SCALE: NONE — 1 / H-501

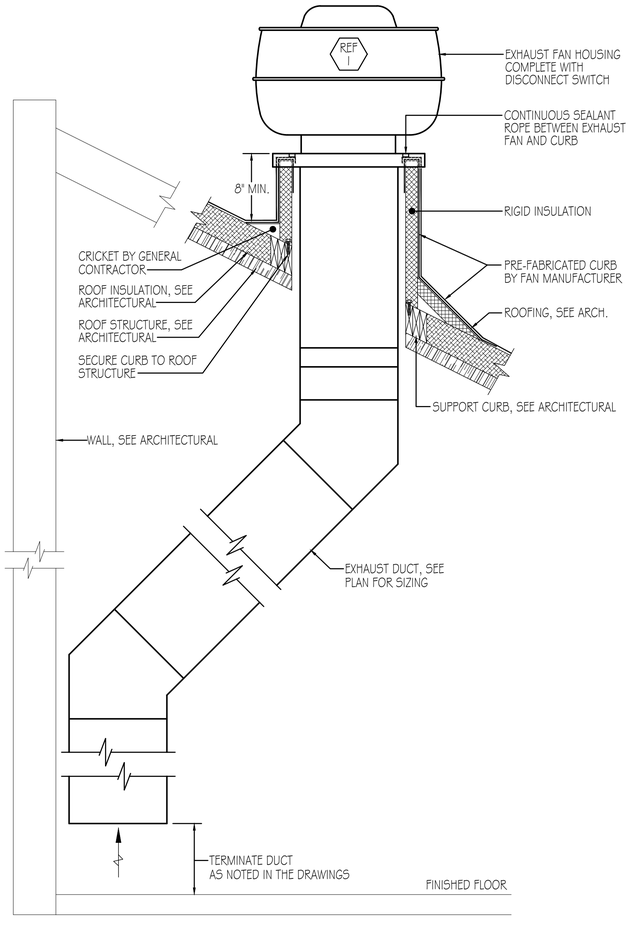


## EXHAUST FAN DETAIL

SCALE: NONE — 7 / H-501

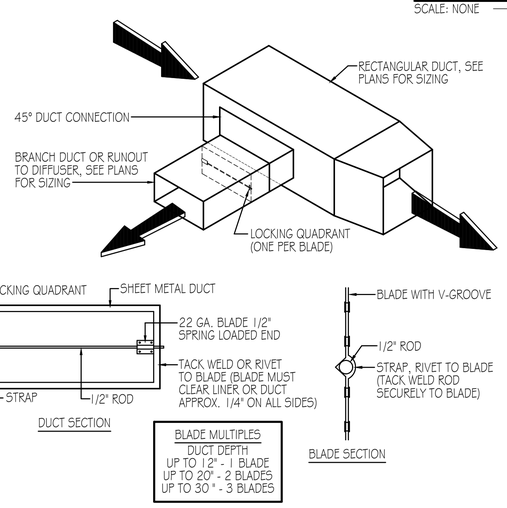


## BRANCH DUCT AND DAMPER DETAIL

SCALE: NONE — 4 / H-501

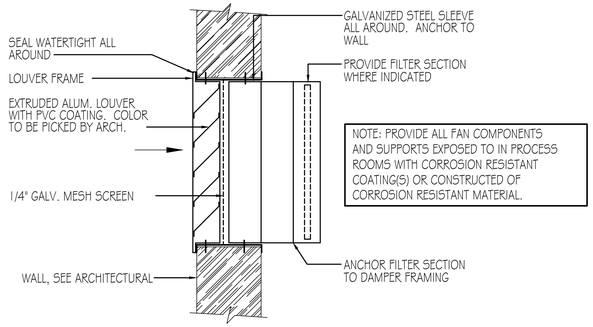


## INLET LOUVER WITH FILTER DETAIL

SCALE: NONE — 5 / H-501

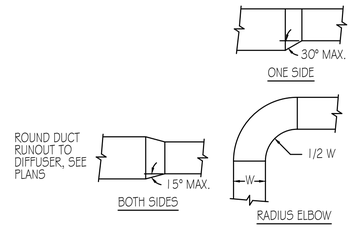


NOTES:
1. ALL DUCTS (SUPPLY, RETURN AND EXHAUST) TO HAVE TURNING VANES IN SQUARE ELBOW.
2. INSIDE SQUARE, OUTSIDE RADIUS ELBOWS NOT ALLOWED.

## RECTANGULAR AND ROUND DUCT FITTING DETAIL

SCALE: NONE — 2 / H-501

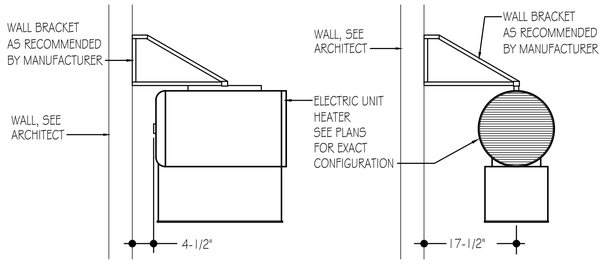


## UNIT HEATER MOUNTING DETAIL

SCALE: NONE — 3 / H-501

PROFESSIONAL ENGINEER — 6647772-2202 — KARSON DAVID HALVERSON — 04/11/2024 — STATE OF UTAH

| | | | | | | | |
|---|---|---|---|---|---|---|---|
| DESIGNED KDH | 3 | | · | | | SCALE · | DOWNTOWN SEWER IMPROVEMENTS AND PUMP STATION HVAC DETAILS |
| DRAFTED KGM | 2 | | | | | | SHEET H–501 |
| CHECKED KDH | 1 | | | | | | 126.42.300 |
| DATE MAY 26, 2022 | NO. | DATE | REVISIONS | BY | APVD. | | |

HANSEN ALLEN & LUCE inc ENGINEERS — HEATH Engineering Company — SOUTH SALT LAKE

I:\2008501 - DWG\HVAC\SHEET\20058 - H-501.dwg, 4/19/2024 4:40:26 PM, Heath Engineering co\GJE

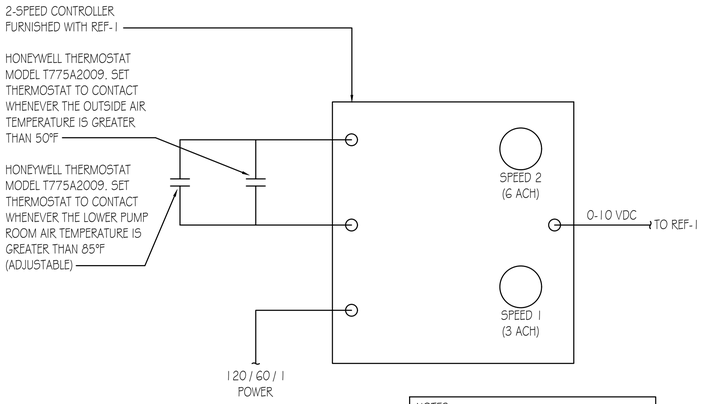


NOTES:
A. REF-1 TO BE CONTROLLED SUCH THAT THE DEFAULT FAN SPEED IS SPEED 1 (3 ACH). WHEN EITHER THERMOSTAT CONTACT IS MADE THEN REF-1 RAMPS UP TO SPEED 2 (6 ACH).

## REF-1 CONTROL DIAGRAM

SCALE: NONE — 3 / H-601

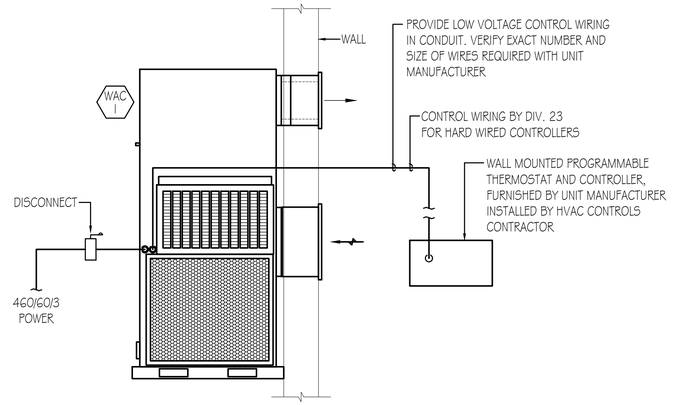


## WALL MOUNTED AIR CONDITIONING UNIT CONTROL DIAGRAM

SCALE: NONE — SEE PLANS FOR EXACT CONFIGURATION — 1 / H-601

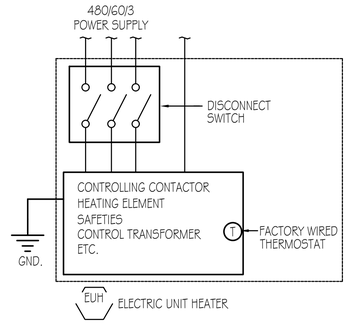


## ELECTRIC UNIT HEATER CONTROL DIAGRAM

SCALE: NONE — 2 / H-601

## CONTROL SEQUENCES AND AIRFLOW DESIGN NOTES

SCREENING ROOM (EUH-1 & 2):

CLASSIFICATION: CLASS 1 DIVISION 11
WHEN THE LOCAL BUILT-IN SPACE THERMOSTATS SERVING ELECTRIC UNIT HEATERS EUH-1 & 2 CALL FOR HEATING, THE UNIT HEATER IS ENERGIZED TO SATISFY THE LOCAL SPACE TEMPERATURE THROUGH ITS FACTORY WIRED CONTROLS. THE UNIT OPERATES UNTIL THE SPACE TEMPERATURE IS SATISFIED AND THEN POWERS OFF. SET BUILT-IN THERMOSTAT SET POINT TO 45°F (ADJ.) THE SCREENING ROOM WILL BE CONTINUOUSLY VENTILATED FOR ODOR CONTROL. LOUVER L-1 WILL SERVE AS THE ODOR CONTROL MAKE UP INLET.

LOWER PUMP ROOM (REF-1 & EUH-3):

SPACE MUST BE CONTINUOUSLY VENTILATED WITH ROOFTOP EXHAUST FAN REF-1 PER THE SCHEDULE BELOW:
6 AC/HOUR WHEN OUTSIDE AIR TEMPERATURE>50°F OR WHEN THE SPACE TEMPERATURE RISES ABOVE SETPOINT (85°F ADJ.).
3 AC/HOUR WHEN OUTSIDE AIR TEMPERATURE<50°F.
LOWER PUMP ROOM VOLUME = 13,600 CU. FT.
6 AC/HOUR = 1360 CFM (USE 1400 CFM).
3 AC/HOUR = 680 CFM (USE 700 CFM).
WHEN THE LOCAL BUILT-IN SPACE THERMOSTAT SERVING ELECTRIC UNIT HEATER EUH-3 CALLS FOR HEATING, THE UNIT HEATER IS ENERGIZED TO SATISFY THE LOCAL SPACE TEMPERATURE THROUGH ITS FACTORY WIRED CONTROLS. THE UNIT OPERATES UNTIL THE SPACE TEMPERATURE IS SATISFIED AND THEN POWERS OFF. SET BUILT-IN THERMOSTAT SET POINT TO 45°F (ADJ.)

UPPER PUMP ROOM (WAC-1):

WAC-1 OPERATES THROUGH ITS OWN INTERNAL CONTROLS BASED UPON A SIGNAL FROM A WALL MOUNTED REMOTE PROGRAMMABLE CONTROLLER.
THE REMOTE PROGRAMMABLE CONTROLLER IS FURNISHED WITH THE AIR CONDITIONING UNIT AND SHALL BE CAPABLE OF CONTROLLING THE UNIT IN COOLING AND HEATING MODES. THE UNIT SHALL OPERATE IN FULL OUTSIDE AIR ECONOMIZER MODE WHEN THE OUTDOOR CONDITIONS PERMIT AS SENSED BY THE UNIT LOGIC BOARD (OUTDOOR TEMPERATURE, HUMIDITY, AND PARTICULATE LEVEL ARE MONITORED BY THE UNIT LOGIC BOARD). THE REMOTE CONTROLLER IS TO BE FIELD PROGRAMMED SO THAT THE SYSTEM MAINTAINS A SPACE TEMPERATURE SET POINT OF 70°F (ADJUSTABLE) IN COOLING MODE AND 50°F (ADJUSTABLE) IN HEATING MODE.

PROFESSIONAL ENGINEER
6647722202
KARSON DAVID HALVERSON
04/19/2024
STATE OF UTAH

HANSEN ALLEN & LUCE inc ENGINEERS

HEATH Engineering Company

| | | | | | | |
|---|---|---|---|---|---|---|
| DESIGNED KDH | 3 | | · | | | SCALE · |
| DRAFTED KGM | 2 | | | | | |
| CHECKED KDH | 1 | | | | | |
| DATE MAY 26, 2022 | NO. | DATE | REVISIONS | BY | APVD. | |

SOUTH SALT LAKE

DOWNTOWN SEWER IMPROVEMENTS AND PUMP STATION
HVAC CONTROL DIAGRAMS

SHEET H-601

126.42.300

T:\2065\501 - DWG\HVAC\SHEET\2065S - H-601.dwg, 4/19/2024 4:40:29 PM, Heath Engineering cox\GJE

## B274<0C82B 3806A0<B

| SYMBOL | DESCRIPTION |
|---|---|
| | TERMINAL LUG OR STRIP |
| | TRANSFORMER |
| | GROUND CONNECTION |
| | BOND TO METALLIC WATER PIPE |
| | BOND TO METALLIC WATER PIPE |
| | BOND TO BUILDING STEEL |
| | GENERATOR |

## ;867C8=6

| SYMBOL | DESCRIPTION |
|---|---|
| | FLUORESCENT LIGHT FIXTURE, SEE FIXTURE SCHEDULE. |
| | EMERGENCY LIGHTING, SEE FIXTURE SCHEDULE. |
| F# | LIGHTING FIXTURE TYPE - SEE FIXTURE SCHEDULE. |
| $ | SINGLE POLE SWITCH |
| $3 | 3 WAY SWITCH |
| $m | WALL MOUNTED MOTION SWITCH - DUAL TECHNOLOGY |
| $T | MOTOR RATED TOGGLE SWITCH |
| $D | DIGITAL OVERRIDE SWITCH |
| $P | SINGLE POLE SWITCH WITH PILOT LIGHT |
| SP | RECESSED CEILING MOUNTED SPEAKER BY OTHERS |
| | WALL MOUNTED MOTION SENSOR |
| | CEILING MOUNTED MOTION SENSOR |
| | CEILING-MOUNTED EXIT LIGHT, SEE FIXTURE SCHEDULE |
| | WALL-MOUNTED EXIT LIGHT, SEE FIXTURE SCHEDULE |
| | RECESSED CAN LIGHT, SEE FIXTURE SCHEDULE |

## 2>=CA>;B 8=BCAD<4=CB

| SYMBOL | DESCRIPTION |
|---|---|
| AE | ANALYZER ELEMENT |
| AIT | ANALYZING INDICATING TRANSMITTER |
| CGD | COMBUSTIBLE GAS DETECTOR |
| CIT | CONDUCTIVITY INDICATING TRANSMITTER |
| FE | FLOW ELEMENT |
| FIT | FLOW INDICATING TRANSMITTER |
| FS | FLOW SWITCH |
| LE | LEVEL ELEMENT |
| LIT | LEVEL INDICATING TRANSMITTER |
| LS | LEVEL SWITCH |
| LT | LEVEL TRANSMITTER |
| ME | MOISTURE ELEMENT |
| MV | MOTOR OPERATED VALVE OR GATE |
| OS | OVER TORQUE SWITCH |
| PIT | PRESSURE INDICATING TRANSMITTER |
| PS | PRESSURE SWITCH |
| SV | SOLENOID OPERATED VALVE |
| TE | TEMPERATURE ELEMENT |
| TS | TEMPERATURE SWITCH |
| TT | TEMPERATURE TRANSMITTER |
| ZS | LIMIT OR POSITION SWITCH |

## B274<0C82B 3806A0<B ?>F4A

| SYMBOL | DESCRIPTION |
|---|---|
| | EMERGENCY STOP PUSH BUTTON (MAINTAINED) |
| | NORMALLY CLOSED PUSH BUTTON |
| | LOCKOUT STOP PUSH BUTTON |
| | NORMALLY OPEN PUSH BUTTON |
| T.C. | CONTACT - TIME DELAY<br>T.C. = NORMALLY OPEN W/TIME DELAY CLOSING.<br>I.C. - T.O. = NORMALLY OPEN WITH INSTANT CLOSING AND TIME DELAY OPENING.<br>T.C.-T.O. = NORMALLY OPEN W/TIME DELAY CLOSING AND TIME DELAY OPENING AFTER DEENERGIZATION. |
| T.O. | CONTACT - TIME DELAY<br>T.C. = NORMALLY CLOSED WITH TIME DELAY OPENING.<br>T.O.-T.C. = NORMALLY CLOSED WITH TIME DELAY OPENING AND TIME DELAY CLOSING AFTER DEENERGIZATION.<br>I.O.-T.C. = NORMALLY CLOSED WITH INSTANT OPENING AND TIME DELAY CLOSING. |
| | NORMALLY OPEN CONTACT |
| | NORMALLY CLOSED CONTACT |
| | LIMIT SWITCH |
| | PRESSURE SWITCH LOW |
| | PRESSURE SWITCH HIGH |
| | FLOW SWITCH |
| | LEVEL FLOAT SWITCH |
| | TEMPERATURE SWITCH |
| AMPS / POLES | DISCONNECT SWITCH SHOWN WITH RATING AND NUMBER OF POLES. |
| | FUSEHOLDER OR FUSEBLOCK |
| AMPS POLES | CIRCUIT BREAKER OR MOTOR CIRCUIT PROTECTOR, SHOWN WITH TRIP RATING AND NUMBER OF POLES. |
| H O A OOX | 3 POSITION SELECTOR SWITCH HAND - OFF - AUTO,<br>POSITION LEGEND: X=CLOSED O=OPEN |
| ON OFF XO | 2 POSITION SELECTOR SWITCH,<br>POSITION LEGEND: X=CLOSED O=OPEN |
| ICTO | TIMER RELAY CONTACT INSTANTANEOUS CLOSE TIME DELAY OPEN. |
| NOTC | TIMER RELAY CONTACT NORMALLY OPEN TIME DELAY CLOSE. |
| 5 | FULL VOLTAGE NONREVERSING (FVNR) MOTOR STARTER OR CONTACTER NUMBER DESIGNATES NEMA SIZE. |
| | RTU, PLC, OR RIO CONTACT |
| UM | UTILITY METER |
| X | BEACON ALARM LIGHT. LETTER INDICATES COLOR: R=RED, A=AMBER, B=BLUE, G=GREEN |
| X | PILOT LIGHT. LETTER INDICATES COLOR: R=RED, A=AMBER, B=BLUE, G=GREEN |
| R | RELAY |
| TD | TIME DELAY RELAY |
| AR | ALARM RELAY |
| ETM ETM | ELAPSED TIME METER |
| M | MOTOR STARTER OR CONTACTOR COIL |
| EOL | ELECTRONIC OVERLOAD RELAY |
| SSRV | SOLID STATE REDUCED VOLTAGE STARTER |
| VFD | VARIABLE FREQUENCY DRIVE |
| HF | HARMONIC FILTER |
| CTS | CURRENT TRANSFORMER |
| | THERMAL OVERLOAD RELAY |
| | LTC CONNECTION |
| | MC CONNECTION |
| X | MOTOR, X = HORSEPOWER |
| | DEVICE LOCATED AT REMOTE LOCATION. |
| | FUSE |
| | NODE OR CONNECTION |

| SYMBOL | DESCRIPTION |
|---|---|
| | DUPLEX RECEPTACLE |
| | DUPLEX RECEPTACLE, RECESSED FLOOR MOUNTED |
| | DUPLEX RECEPTACLE, RECESSED CEILING MOUNTED |
| | QUADRAPLEX RECEPTACLE |
| | QUADRAPLEX RECEPTACLE, RECESSED FLOOR MOUNTED |
| | QUADRAPLEX RECEPTACLE, RECESSED CEILING MOUNTED |
| | ISOLATED GROUND TYPE DUPLEX RECEPTACLE |
| | SPECIAL PURPOSE OR WELDING OUTLET. |
| GFCI | GROUND FAULT CIRCUIT INTERRUPTER RECEPTACLE. |
| WP | WEATHERPROOF CONVENIENCE OUTLET |
| | FLUSH FLOOR DEVICE BOX |
| | HOME RUN TO PANEL - INDICATING 2 #12, #12 GND, 3/4" CONDUIT OR AS SHOWN. |
| | HOME RUN TO PANEL - INDICATING NUMBER OF CONDUCTORS - #12 OR AS SHOWN. |
| X-1,3,5 | HOME RUN TO PANEL SHOWING BRANCH CIRCUIT NUMBERS. |
| | HATCH MARKS IN CONDUIT RUN DENOTES NUMBER OF CONDUCTORS IN CONDUIT. LONG HATCH MARK DENOTES GROUND CONDUCTOR. SIZE OF CONDUCTORS TO BE #12 AWG CONDUCTORS IN CONDUIT UNLESS NOTED OTHERWISE. UNMARKED CONDUITS SHALL BE 3/4" WITH 3 #12. |
| (E) | DENOTES EXISTING EQUIPMENT OR DEVICES |
| T | THERMOSTAT |
| X M | MOTOR, X = HORSE POWER |
| F | CEILING EXHAUST FAN |
| J | JUNCTION BOX |
| | ELECTRICAL PANEL, POWER OR LIGHTING |
| | METER BASE |
| | COMBINATION MOTOR STARTER, SEE SPECS |
| | DISCONNECT SWITCH. (VOLTAGE RATING, NEMA ENCLOSURE, FUSE (NF-NO FUSE), POLES, SIZE (AMPS)) |
| +0'-0" | THIS NOTATION ADJACENT TO WALL OUTLET SYMBOL DENOTES MOUNTING HEIGHT ABOVE FINISHED FLOOR TO CENTER OF OUTLET DEVICE. IF NOT NOTED, THE MOUNTING HEIGHT TO CENTER SHALL BE AS DETAILED OR SPECIFIED. |
| $M | MANUAL MOTOR STARTER |
| $T | MANUAL MOTOR STARTER WITH OVERLOADS |
| DM | DAMPER MOTOR |
| F# | LIGHTING FIXTURE TYPE - SEE FIXTURE SCHEDULE. |
| $ | SINGLE POLE SWITCH |
| $3 | 3 WAY SWITCH |
| $4 | 4 WAY SWITCH |
| | COMMUNICATION/DATA JACK. CONDUIT TO ABOVE CEILING. OWNER TO RUN WIRING. |
| 2 | DATA OR CATHODE RAY TUBE (CRT) TERMINAL OUTLET. + 1'-6". (SINGLE, DOUBLE) |
| 2 4 | TELEPHONE JACK OUTLET. 1'-6". (SINGLE, DOUBLE, QUAD) |

## 54434A 34B86=0C8>=:;>682

| 6 | I | P: 2<br>N: 3<br>G: 4 | 5 |
|---|---|---|---|

1. NUMBER OF CONDUITS
2. P: NUMBER - SIZE OF PHASE CONDUCTORS PER CONDUIT
3. N: NUMBER - SIZE OF NEUTRAL CONDUCTOR(S) PER CONDUIT
4. G: NUMBER- SIZE OF GROUND CONDUCTOR(S) PER CONDUIT
5. SIZE OF EACH CONDUIT IN INCHES
6. CONDUIT NUMBER

KEY TO CONDUCTOR SIZE & TYPE

| | | | |
|---|---|---|---|
| 14 = #14 AWG COPPER | 6 = #6 AWG COPPER | 1/0 = 1/0 AWG COPPER | 250 = 250 KCMIL COPPER |
| 12 = #12 AWG COPPER | 4 = #4 AWG COPPER | 2/0 = 2/0 AWG COPPER | 350 = 350 KCMIL COPPER |
| 10 = #10 AWG COPPER | 2 = #2 AWG COPPER | 3/0 = 3/0 AWG COPPER | 500 = 500 KCMIL COPPER |
| 8 = #8 AWG COPPER | | 4/0 = 4/0 AWG COPPER | 750 = 750 KCMIL COPPER |

## 011A4E80C8>=B

| | | | |
|---|---|---|---|
| A | AMPERE | N | NEUTRAL |
| AFF | ABOVE FINISHED FLOOR | NEC | NATIONAL ELECTRICAL CODE |
| AI | ANALOG INPUT | NECA | NATIONAL ELECTRICAL CONTRACTOR ASSOCIATION |
| AIC | AMPS INTERRUPTING CAPACITY | | |
| AFD | ADJUSTABLE FREQUENCY DRIVES | NOTC | NORMALLY OPEN TIMED CLOSED |
| AO | ANALOG OUTPUT | NPW | NON-POTABLE WATER |
| AS | AIR SUPPLY | NS | NITROGEN SUPPLY |
| ATS | AUTOMATIC TRANSFER SWITCH | NTS | NOT TO SCALE |
| | | NTU | TURBIDITY |
| BC | BYPASS CONTACTOR | | |
| | | O.C. | ON CENTER |
| C | CONDUIT | OF | OVERFLOW |
| CB | CIRCUIT BREAKER | OIT | OPERATOR INTERFACE TERMINAL |
| CL2 | CHLORINE | OL | OVERLOAD |
| CON | CONTACTOR | OO | ON/OFF (MAINTAINED) |
| CPM | CUSTOMER POWER MONITORING | OR | OFF-REMOTE |
| CPT | CONTROL POWER TRANSFORMER | | |
| CU | COPPER, BARE | P | PHASE OR POLE |
| CV | CONTROL VALVE | PB | PULL BOX |
| | | PCP | PROCESS CONTROL PANEL |
| DCS | DISTRIBUTED CONTROL SYSTEM | PFR | PHAS/POWER FAILURE RELAY |
| DI | DISCRETE INPUT | PI | PULSE INPUT |
| DO | DISCRETE OUTPUT | PLC | PROGRAMMABLE LOGIC CONTROLLER |
| DV/DT | DIFFERENTIAL VOLTAGE/TIME | | |
| DWG | DRAWING | PLI | PLANT INFLUENT |
| | | PKG | PACKAGE |
| ELR | END OF LINE RESISTER | PMP | PUMP |
| ETM | ELAPSED TIME METER | PNL | PANEL |
| EOL | ELECTRONIC OVERLOAD | PO | PULSE OUTPUT |
| ES | EMERGENCY STOP | PPG | POUNDS PER GALLON |
| EXIST | EXISTING | PPH | POUNDS PER HOUR |
| | | PPM | PARTS PER MILLION |
| FA | FOUL AIR | PR | PAIR |
| FC | FAIL CLOSED | PRES | PRESSURE |
| FE | FLOW ELEMENT | PS | PRESSURE SWITCH |
| FLA | FULL LOAD AMPS | PSH | PRESSURE SWITCH, HIGH |
| FS | FLOW SWITCH | PSI | POUNDS PER SQUARE INCH |
| FVNR | FULL VOLTAGE NON-REVERSING | PV | PROCESS VARIABLE |
| FW | FINISHED WATER | | |
| | | RAS | RETURN ACTIVATED SLUDGE |
| G | GROUND | RW | RAW WATER |
| GES | GROUNDING ELECTRODE SYSTEM | RCL | REMOTE I/O |
| GFCI | GROUND FAULT CIRCUIT INTERRUPTER | RF | RADIO FREQUENCY |
| | | RIO | REMOTE INPUT/OUTPUT |
| GFP | GROUND FAULT PROTECTION | RS | RAW SEWAGE |
| GND | GROUND | RSP | RAW SEWAGE PUMP |
| GPD | GALLONS PER DAY | RST | RESET |
| GPH | GALLONS PER HOUR | RTD | RESISTANCE TEMPERATURE DETECTOR |
| GPM | GALLONS PER MINUTE | | |
| GRS | GALVANIZED RIGID STEEL | RTU | REMOTE TELEMETRY UNIT |
| | | RWT | REFLECTED WAVE TRAP |
| H, HI | HIGH | | |
| H2S | HYDROGEN SULFIDE | SEQ | SERVICE ENTRANCE EQUIPMENT |
| HMI | HUMAN MACHINE INTERFACE | SES | SERVICE ENTRANCE SECTION |
| HOA | HAND-OFF-AUTO | SLC | SINGLE LOOP CONTROLLER |
| HOR | HAND-OFF-REMOTE | SLOS | START-LOCK-OFF-STOP |
| | | SMC | SUBMERSIBLE MANUFACTURER CABLE |
| I | CURRENT | | |
| IC | INSTRUMENTATION CABLE | SO2 | SULFUR DIOXIDE |
| ICR | INTERMITTENT CYCLE REACTOR | SP | SET POINT |
| IO | INPUT/OUTPUT | SPC | SPARE CONDUIT |
| ISC | SHORT CIRCUIT CURRENT | SPR | SPARE |
| ISR | INTRINSICALLY SAFE RELAY | SS | START/STOP |
| | | SSS | SOLID STATE STARTER (SOFT START) |
| JB | JUNCTION BOX | | |
| | | ST | SHUNT TRIP |
| L, LO | LOW | | |
| LAN | LOCAL AREA NETWORK | TC | TELEPHONE CABLE |
| LC | LOOP CONTROLLER | TDOE | TIME DELAY ON ENERGIZE |
| LCL | LEVEL CONTROL, LOW | TS | TEMPERATURE SWITCH |
| LCP | LOCAL CONTROL PANEL | TSP | TWISTED SHIELDED PAIR |
| LOS | LOCK-OUT-STOP | TVSS | TRANSIENT VOLTAGE SURGE SUPPRESSION |
| LR | LOCAL/REMOTE | | |
| LS | LEVEL SWITCH | TYP | TYPICAL |
| LTC | LIQUID TIGHT FLEXIBLE CONDUIT | | |
| | | UG | UNDERGROUND |
| M | MOTOR | | |
| MA | MANUAL/AUTO, MILLIAMP | V | VOLT |
| MAX | MAXIMUM | VFD | VARIABLE FREQUENCY DRIVE |
| MC | MANUFACTURER'S CABLE | | |
| MCB | MAIN CIRCUIT BREAKER | W | WATT, WIRE |
| MCC | MOTOR CONTROL CENTER | WAS | WASTE ACTIVATED SLUDGE |
| MCP | MOTOR CIRCUIT PROTECTOR | WP | WEATHERPROOF |
| MFR(S) | MANUFACTURER(S) | | |
| MGD | MILLION GALLONS PER DAY | XFMR | TRANSFORMER |
| MGL | MILLIGRAMS PER LITER | XMTR | TRANSMITTER |
| MH | MANHOLE | | |
| MIN | MINIMUM | ZS | POSITION SWITCH |
| ML | MIXED LIQUOR | | |
| MOV | MOTOR OPERATED VALVE | | |
| MTU | MASTER TELEMETRY UNIT | | |

## 4;42CA820; ;8=4CH?4B

| SYMBOL | DESCRIPTION |
|---|---|
| | EXPOSED CONDUIT |
| | UNDERGROUND CONDUIT |
| | BARE COPPER GROUND CONDUCTOR |
| | EXISTING EXPOSED CONDUIT |
| | EXISTING UNDERGROUND CONDUIT |
| | CAPPED UNDERGROUND CONDUIT OR STUBBUP |
| | NEW ELECTRICAL EQUIPMENT |
| | DETAIL VIEW OR MATCHING |
| | FUTURE |
| | CONDUIT DROP |
| | CONDUIT RISE |

PROFESSIONAL ENGINEER
# 11573207-2202
ROBERT J. HILLYER
04/19/2024
STATE OF UTAH

HANSEN ALLEN & LUCE inc ENGINEERS

HEATH Engineering Company

| | | | | | | |
|---|---|---|---|---|---|---|
| DESIGNED | RJH | 3 | | · | | |
| DRAFTED | KGM | 2 | | | | |
| CHECKED | RJH | 1 | | | | |
| DATE | MAY 26, 2022 | NO. | DATE | REVISIONS | BY | APVD. |

SCALE ·

SOUTH SALT LAKE

DOWNTOWN SEWER IMPROVEMENTS AND PUMP STATION
ELECTRICAL
SYMBOL LEGEND

SHEET E-01

126.42.300

I:\26058\01 - DWG\ELEC\SHEET\26058 - E-01.dwg, 4/19/2024 4:05:19 PM, Heath Engineering ca/GJE

# LIGHTING FIXTURE SCHEDULE

| TYPE | ELECTRICAL | MANUFACTURER | CATALOG NUMBER | DESCRIPTION | SOURCE | NOTES |
|---|---|---|---|---|---|---|
| F1 | 49W<br>120-277V | LITHONIA | CLX L48 7000LM SEF ULENS WD MVOLT 50K 80CRI | CLX LED L48 , 7000LM, STANDARD EFFICIENCY, LESS LOUVER, LESS LENS, WIDE, MVOLT, GZ10, 4000K, 80CRI, PAINTED WHITE SHEET METAL | 5000K CCT<br>7000 Lm<br>80 CRI | 1 |
| F1E | 49W<br>120-277V | LITHONIA | CLX L48 7000LM SEF ULENS WD MVOLT 50K 80CRI E10WLCP | SAME AS F1 BUT WITH 10W EMERGENCY BATTERY PACK | 5000K CCT<br>7000 Lm<br>80 CRI | 1 |
| F2 | 51W<br>120-277V | LITHONIA | FEM L48 8000LM LPPFL MD 80CRI 50K ST5L | FEM LED 48", 8,000 LUMENS, POLYCARBONATE, LOW PROFILE FROSTED LENS, MEDIUM DISTRIBUTION, 80 CRI, 5000 K STAINLESS STEEL LATCHES | 5000K CCT<br>8000 Lm<br>80 CRI | 1 |
| F2E | 51W<br>120-277V | LITHONIA | FEM L48 8000LM LPPFL MD 80CRI 50K ST5L | SAME AS F2 BUT WITH 10W EMERGENCY BATTERY PACK | 5000K CCT<br>8000 Lm<br>80 CRI | 1 |
| F3 | 25W<br>120-277V | LITHONIA | WST LED P2 50K VF MVOLT PE DDBXD | LED WALL PACK. DIE-CAST ALUMINUM HOUSING, FORWARD THROW OPTICS. PROVIDE INTEGRAL BUTTON TYPE PHOTOCELL. | 5000K CCT<br>3000 Lm<br>70 CRI | 1 |
| F4 | 40W<br>120-277V | HOLOPHANE | EMXH L48 6000LM PGFL WD MVOLT 40K 80CRI | CLASS 1 DIV 2 HAZARDOUS CLASSIFICATION 4FT LINEAR WIDE DISTRIBUTION | 5000K CCT<br>6000 Lm<br>80 CRI | 1 |

NOTES:
1 - EQUAL FIXTURE SUBSTITUTIONS ALLOWED UPON PRIOR APPROVAL FROM ENGINEER.

# CONTROL CONDUIT SCHEDULE

| | |
|---|---|
| C100 | 4-#14, 1-#14 GND, 3/4"C |
| C101 | 2-#16 TSP, 1-#16 GND, 1"C |
| C102 | FLOW ELEMENT CABLE TO FLOW TRANSMITTER, 1"C |
| C103 | LEVEL ELEMENT CABLE TO LEVEL TRANSMITTER, 1"C |
| C104 | PULL LINE, 1"C |
| C105 | CAT 6 CABLE, 1"C |
| C106 | 14-#14, 1-#14 GND, 1"C |
| C107 | 3-#16 TSP, 1-#16 GND, 1"C |
| C108 | FLOAT SWITCH CABLE, 1"C |
| C109 | 6-#14, 1-#14 GND, 1"C |
| C110 | 8-#14, 1-#14 GND, 1"C |
| C111 | 4 - FIBER OPTIC, 4" HDPE WITH (4) 1" INNER DUCTS |
| C112 | MANUFACTURER'S CABLE 1"C |
| C113 | 8 - #16 TSP 3-WIRE TRIPLEX RTD CABLE,<br>2-#12, 1-#12 GND, 1-1/4"C |

# POWER CONDUIT SCHEDULE

| | | | |
|---|---|---|---|
| P105 | 1 | P: 3 - #8<br>N: NONE<br>G: 1 - #10 | 3/4" |
| P106 | 1 | P: 3 - #12<br>N: NONE<br>G: 1 - #12 | 3/4" |
| P107 | 1 | P: 2 - #6<br>N: NONE<br>G: 1 - #10 | 3/4" |
| P108 | 1 | P: 3 - #6<br>N: NONE<br>G: 1 - #10 | 1" |
| P109 | 1 | P: 2 - #12<br>N: NONE<br>G: 1 - #12 | 3/4" |
| P110 | 2 | P: 3 - 500<br>N: 1 - 500<br>G: NONE | 3-1/2" |
| P111 | 1 | P: 1 - #14<br>N: 1 - #14<br>G: 1 - #14 | 3/4" |

| | | | |
|---|---|---|---|
| P001 | 3 | CONDUCTORS<br>BY<br>UTILITY | 4" |
| P002 | 1 | CONDUCTORS<br>BY<br>UTILITY | 1-1/4" |
| P100 | 2 | P: 3 - 500<br>N: 1 - 500<br>G: 1 - 1/0 | 3-1/2" |
| P101 | 1 | P: 3 - 3/0<br>N: NONE<br>G: 1 - #4 | 2" |
| P102 | 1 | P: 3 - #10<br>N: NONE<br>G: 1 - #10 | 3/4" |
| P103 | 1 | P: 3 - #4<br>N: NONE<br>G: 1 - #4 | 1-1/4" |
| P104 | 1 | P: 3 - 2/0<br>N: NONE<br>G: 1 - #6 | 2" |

PROVIDE MINIMUM 1" CONDUIT UNDERGROUND

# PANEL L

MAIN BREAKER AMPS 175 — 80% — BUS AMPS: 225

VOLTAGE: 208/120 V 3Ø 4W — CIRCUIT BREAKER TYPE: BOLT-ON — MOUNTING: SURFACE

ENCLOSURE: NEMA 1 — INTERRUPTING CAPACITY: 10 KAIC — COVER TYPE: DOOR-IN-DOOR

LOCATION: AS INDICATED

| BRANCH CIRCUIT BREAKER | | | | CONNECTION | DESCRIPTION | PHASE | | | DESCRIPTION | CONNECTION | BRANCH CIRCUIT BREAKER | | | |
|---|---|---|---|---|---|---|---|---|---|---|---|---|---|---|
| NOTES | # | AMP | P. | LOAD (VA) | | A | B | C | | LOAD (VA) | P. | AMP | # | NOTES |
| | L-1 | 20 | 1 | 799 | LIGHTING | 2299 | | | GENERATOR BLOCK HEATER | 1500 | 2 | 20 | L-2 | |
| | L-3 | 20 | 1 | 1620 | RECEPTACLES | | 3120 | | ------ | 1500 | - | - | L-4 | |
| | L-5 | 20 | 1 | 900 | RECEPTACLES | | | 2300 | GENERATOR AUX | 1400 | 1 | 20 | L-6 | |
| | L-7 | 20 | 1 | 150 | FLOW METER | 1326 | | | SUMP | 1176 | 1 | 20 | L-8 | |
| | L-9 | 25 | 1 | | SPARE | | 4160 | | WELDER | 4160 | 2 | 50 | L-10 | |
| | L-11 | 20 | 1 | 1200 | PLC | | | 5360 | ------ | 4160 | - | - | L-12 | |
| | L-13 | 40 | 3 | 2004 | CRANE HOIST | 2504 | | | COMBUSTIBLE GAS ALARM PANEL | 500 | 1 | 20 | L-14 | |
| | L-15 | -- | -- | 2004 | ------ | | 4008 | | HEADWORKS CRANE HOIST | 2004 | 3 | 40 | L-16 | |
| | L-17 | -- | -- | 2004 | ------ | | | 4008 | ------ | 2004 | -- | -- | L-18 | |
| | L-19 | 20 | 1 | 1422 | PUMP ROOM VENT FAN REF-1 | 3426 | | | ------ | 2004 | -- | -- | L-20 | |
| | L-21 | 40 | 3 | 2004 | LOWER CRANE HOIST | | 2252 | | HEADWORKS LIGHTING | 248 | 1 | 20 | L-22 | |
| | L-23 | -- | -- | 2004 | ------ | | | 2004 | SPARE | | 1 | 20 | L-24 | |
| | L-25 | -- | -- | 2004 | ------ | 2004 | | | SPARE | | 1 | 20 | L-26 | |
| | L-27 | 20 | 1 | | SPARE | | 0 | | SPARE | | 1 | 20 | L-28 | |
| | L-29 | 20 | 1 | | SPARE | | | 0 | SPARE | | 1 | 20 | L-30 | |
| | L-31 | 20 | 1 | | SPARE | 0 | | | SPARE | | 1 | 20 | L-32 | |
| | L-33 | 20 | 1 | | SPARE | | 0 | | SPARE | | 1 | 20 | L-34 | |
| | L-35 | 20 | 1 | | SPARE | | | 0 | SPARE | | 1 | 20 | L-36 | |
| | L-37 | 20 | 1 | | SPARE | 0 | | | SPARE | | 1 | 20 | L-38 | |
| | L-39 | 20 | 1 | | SPARE | | 0 | | SPARE | | 1 | 20 | L-40 | |
| | L-41 | 20 | 1 | | SPARE | | | 0 | SPARE | | 1 | 20 | L-42 | |
| | | | | | PHASE SUBTOTALS (VA) | 11559 | 13540 | 13672 | | | | | | |
| | | | | | PHASE TOTALS (KVA) | 11.6 | 13.5 | 13.7 | | | | | | |
| | | | | | PHASE TOTALS @ 120V (AMPS) | 96.3 | 112.8 | 113.9 | | | | | | |

NOTES:
GEN PROVIDE WITH SURGE PROTECTION DEVICE

# PANEL MDP

MLO — BUS AMPS: 800

VOLTAGE: 480/277 V 3Ø 4W — CIRCUIT BREAKER TYPE: I-LINE — MOUNTING: SURFACE

ENCLOSURE: NEMA 1 — INTERRUPTING CAPACITY: 65 KAIC — COVER TYPE: DOOR-IN-DOOR

LOCATION: AS INDICATED

| BRANCH CIRCUIT BREAKER | | | | CONNECTION | DESCRIPTION | PHASE | | | DESCRIPTION | CONNECTION | BRANCH CIRCUIT BREAKER | | | |
|---|---|---|---|---|---|---|---|---|---|---|---|---|---|---|
| NOTES | # | AMP | P. | LOAD (VA) | | A | B | C | | LOAD (VA) | P. | AMP | # | NOTES |
| | MDP-1 | 225 | 3 | 38780 | PUMP P1 | 50339 | | | TRANSFORMER TL (45KVA) | 11559 | 3 | 70 | MDP-2 | |
| | MDP-3 | -- | -- | 38780 | ------ | | 52320 | | ------ | 13540 | -- | -- | MDP-4 | |
| | MDP-5 | -- | -- | 38780 | ------ | | | 52452 | ------ | 13672 | -- | -- | MDP-6 | |
| | MDP-7 | 225 | 3 | 38780 | PUMP P2 | 43433.6 | | | WAC-1 | 4654 | 3 | 30 | MDP-8 | |
| | MDP-9 | -- | -- | 38780 | ------ | | 43433.6 | | ------ | 4654 | -- | -- | MDP-10 | |
| | MDP-11 | -- | -- | 38780 | ------ | | | 43433.6 | ------ | 4654 | -- | -- | MDP-12 | |
| 1 | MDP-13 | 225 | 3 | 0 | PUMP P3 | 2105 | | | GRINDER | 2105 | 3 | 20 | MDP-14 | |
| | MDP-15 | -- | -- | 0 | ------ | | 2105 | | ------ | 2105 | -- | -- | MDP-16 | |
| | MDP-17 | -- | -- | 0 | ------ | | | 2105 | ------ | 2105 | -- | -- | MDP-18 | |
| | MDP-19 | 40 | 3 | 5817 | PUMP P4 | 5817 | | | SPARE | | 3 | 20 | MDP-20 | |
| | MDP-21 | -- | -- | 5817 | ------ | | 5817 | | ------ | | -- | -- | MDP-22 | |
| | MDP-23 | -- | -- | 5817 | ------ | | | 5817 | ------ | | -- | -- | MDP-24 | |
| | MDP-25 | 40 | 3 | 5817 | PUMP P5 | 5817 | | | SPARE | | 3 | 20 | MDP-26 | |
| | MDP-27 | -- | -- | 5817 | ------ | | 5817 | | ------ | | -- | -- | MDP-28 | |
| | MDP-29 | -- | -- | 5817 | ------ | | | 5817 | ------ | | -- | -- | MDP-30 | |
| | MDP-31 | 20 | 3 | 3333 | PUMP ROOM HEATER (EUH-3) | 5438 | | | ODOR CONTROL UNIT | 2105 | 3 | 20 | MDP-32 | |
| | MDP-33 | -- | -- | 3333 | -------- | | 5438 | | ------ | 2105 | -- | -- | MDP-34 | |
| | MDP-35 | -- | -- | 3333 | -------- | | | 5438 | ------ | 2105 | -- | -- | MDP-36 | |
| | MDP-37 | 50 | 3 | 9972 | HEADWORKS SCREEN CONTROL PANEL | 12077 | | | ODOR CONTROL UNIT | 2105 | 3 | 20 | MDP-38 | |
| | MDP-39 | -- | -- | 9972 | ------- | | 12077 | | ------ | 2105 | -- | -- | MDP-40 | |
| | MDP-41 | -- | -- | 9972 | ------ | | | 12077 | ------ | 2105 | -- | -- | MDP-42 | |
| | MDP-43 | 20 | 3 | 3518 | HEADWORKS UNIT HEATER (EUH-1) | 3518 | | | SPARE | | 3 | 20 | MDP-44 | |
| | MDP-45 | -- | -- | 3518 | -------- | | 3518 | | ------- | | -- | -- | MDP-46 | |
| | MDP-47 | -- | -- | 3518 | -------- | | | 3518 | ------- | | -- | -- | MDP-48 | |
| | MDP-49 | 20 | 3 | 3518 | HEADWORKS UNIT HEATER (EUH-2) | 4100 | | | HEADWORKS ROLL-UP DOOR | 582 | 3 | 20 | MDP-50 | |
| | MDP-51 | -- | -- | 3518 | -------- | | 4100 | | ------- | 582 | -- | -- | MDP-52 | |
| | MDP-53 | -- | -- | 3518 | -------- | | | 4100 | ------- | 582 | -- | -- | MDP-54 | |
| | MDP-55 | 60 | 3 | 7479 | AERIGATOR 1 | 14958 | | | AERIGATOR 2 | 7479 | 3 | 60 | MDP-56 | |
| | MDP-57 | -- | -- | 7479 | -------- | | 14958 | | ------- | 7479 | -- | -- | MDP-58 | |
| | MDP-59 | -- | -- | 7479 | -------- | | | 14958 | ------- | 7479 | -- | -- | MDP-60 | |
| | MDP-61 | | | | PROVISION | 0 | | | PROVISION | | | | MDP-62 | |
| | MDP-63 | | | | PROVISION | | 0 | | PROVISION | | | | MDP-64 | |
| | MDP-65 | | | | PROVISION | | | 0 | PROVISION | | | | MDP-66 | |
| | | | | | PHASE SUBTOTALS (VA) | 147603 | 149584 | 149716 | | | | | | |
| | | | | | PHASE TOTALS (KVA) | 147.6 | 149.6 | 149.7 | | | | | | |
| | | | | | PHASE TOTALS @ 277V (AMPS) | 532.9 | 540.0 | 540.5 | | | | | | |

NOTES:
1 - MAXIMUM 2 OF 3 LARGE PUMPS RUNNING ELECTRICALLY INTERLOCKED. ONE ALWAYS STANDBY.
GEN PROVIDE WITH SURGE PROTECTION DEVICE

PROFESSIONAL ENGINEER
# 11573207-2202
ROBERT J. HILLYER
04/19/2024
STATE OF UTAH

HANSEN ALLEN & LUCE Inc ENGINEERS

HEATH Engineering Company

| | | | | | | |
|---|---|---|---|---|---|---|
| DESIGNED | RJH | 3 | | . | | |
| DRAFTED | KGM | 2 | | | | |
| CHECKED | RJH | 1 | | | | |
| DATE | MAY 26, 2022 | NO. | DATE | REVISIONS | BY | APVD. |

SCALE .

SOUTH SALT LAKE

DOWNTOWN SEWER IMPROVEMENTS AND PUMP STATION
ELECTRICAL
PANEL AND CONDUIT SCHEDULES

SHEET E-02

126.42.300

I:\2065801 - DWG\ELEC\SHEET\20658 - E-02.dwg, 4/19/2024 5:00:48 PM, Heath Engineering co\GJE

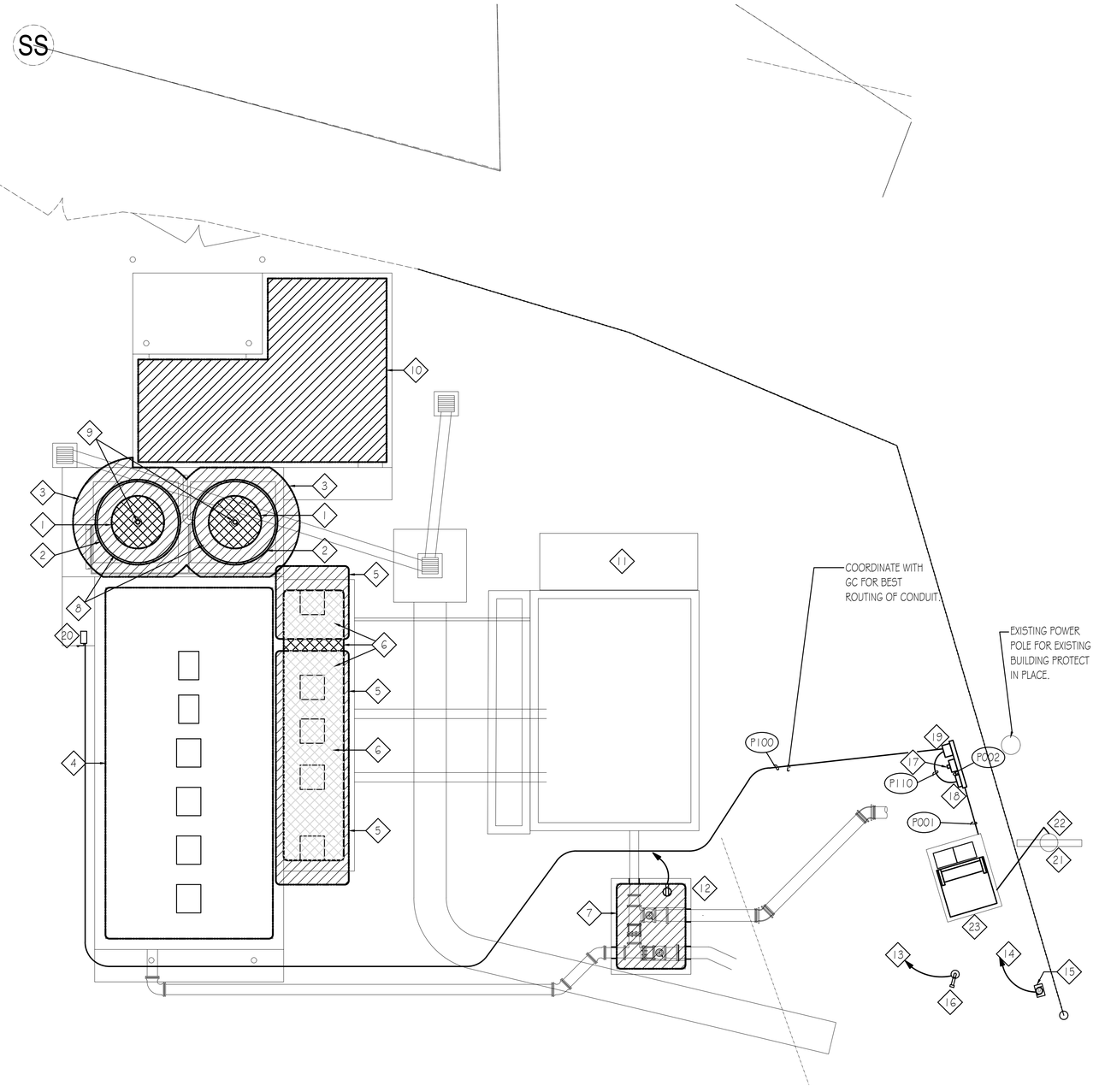


## DRAWING NOTES

1. CLASS 1, DIV 1 TO 3'-0" RADIUS FROM OUTLET.
2. CLASS 1, DIV 2 TO 5'-0" RADIUS FROM OUTLET.
3. CLASS 1, DIV 2 TO 3'-0" RADIUS AROUND EQUIPMENT.
4. UNCLASSIFIED UPSTAIRS. UNCLASSIFIED DOWNSTAIRS WITH 6 AIR CHANGES PER HOUR, 3 AIR CHANGES PER HOUR UNDER 50°F.
5. CLASS 1, DIV 2 TO 1'-6" HEIGHT ABOVE GRADE WITHIN 3'-0" OF ANY HATCH OR OPENING.
6. CLASS 1, DIV 1 WITHIN WET WELL BELOW GRADE
7. VALVE VAULT CLASS 1, DIV 2 CONFINED SPACE.
8. ODOR CONTROL UNIT.
9. ODOR CONTROL OUTLET.
10. CLASS 1, DIV 2 WITHIN ALL INDOOR AREA OF HEADWORKS BUILDING. WITH 12 AIR CHANGES IN LOWER LEVEL.
11. PREPARE SPACE FOR NEW GENERATOR. COORDINATE WITH OWNER AND GENERAL CONTRACTOR REMOVAL OF PORTABLE GENERATOR AND PREPARATION OF SPACE FOR THE INSTALLATION OF A NEW GENERATOR. REPLACE GENERATOR PLUG WITH NEW NEMA 3R GENERATOR BREAKER ENCLOSURE 200A/3P. SEE ONE-LINE DIAGRAM REGARDING CONNECTIONS. FIELD-COORDINATE ALL REQUIREMENTS.
12. PROVIDE WP GFCI RECEPTACLE FOR SUMP PUMP. SEE CIVIL DETAILS. POWER FROM EXISTING BUILDING 120V PANEL SPARE 20A BREAKER.
13. DEMOLISH EXISTING GATE CONTROLLER AND GATE OPERATOR. FIELD-COORDINATE. RE-USE POWER CONDUIT AS PRACTICABLE FOR NEW GATE OPERATOR.
14. PROVIDE POWER TO GATE OPERATOR FROM THE SAME CIRCUIT AS CURRENTLY FEEDS EXISTING GATE OPERATOR. EXTEND TO HERE PER MANUFACTURER'S RECOMMENDATIONS. SEE ALSO CIVIL DRAWINGS.
15. GATE OPERATOR. SEE ALSO CIVIL DRAWINGS
16. POLE MOUNTED KEYPAD. WIRE CONTROLS AS RECOMMENDED BY GATE CONTROLLER MANUFACTURER'S RECOMMENDATIONS. SEE ALSO CIVIL DRAWINGS.
17. POWER METER
18. CT CABINET
19. PRIMARY DISCONNECT FOR NEW BUILDING.
20. BUILDING MAIN DISCONNECT.
21. NEW POWER POLE BY RMP.
22. PROVIDE 4" PVC CONDUIT WITH LONG SWEEP FIBERGLASS ELBOWS AND PULL STRING. STUB UP AT LOCATION OF BASE OF NEW POLE. PROVIDE 4" RISER CONDUIT FOR RMP. CONFIRM CONDUIT COUNT AND SIZE AND INSTALLATION TIMING WITH RMP.
23. UTILITY TRANSFORMER. VAULT AND CONDUIT WITH PULL STRING BY CONTRACTOR. COORDINATE ALL UTILITY REQUIREMENTS WITH ROCKY MOUNTAIN POWER.

1 ES-100 **ELECTRICAL SITE PLAN**
SCALE: 1/8" = 1'-0"
10 5 0 10 20

PROFESSIONAL ENGINEER
# 11573207-2202
ROBERT J. HILLYER
04/19/2024
STATE OF UTAH

| | | | | | | | |
|---|---|---|---|---|---|---|---|
| HANSEN ALLEN & LUCE Inc ENGINEERS | HEATH Engineering Company | DESIGNED RJH | 3 | | | | SCALE |
| | | DRAFTED KGM | 2 | | | | |
| | | CHECKED RJH | 1 | | | | |
| | | DATE MAY 26, 2022 | NO. | DATE | REVISIONS | BY APVD. | |

SOUTH SALT LAKE

DOWNTOWN SEWER IMPROVEMENTS AND PUMP STATION
ELECTRICAL
SITE PLANS

SHEET ES100
126.42.300

I:\2065801 - DWG\ELEC\SHEET\20658 - ES-100.dwg, 4/19/2024 5:02:12 PM, Heath Engineering co/GJE

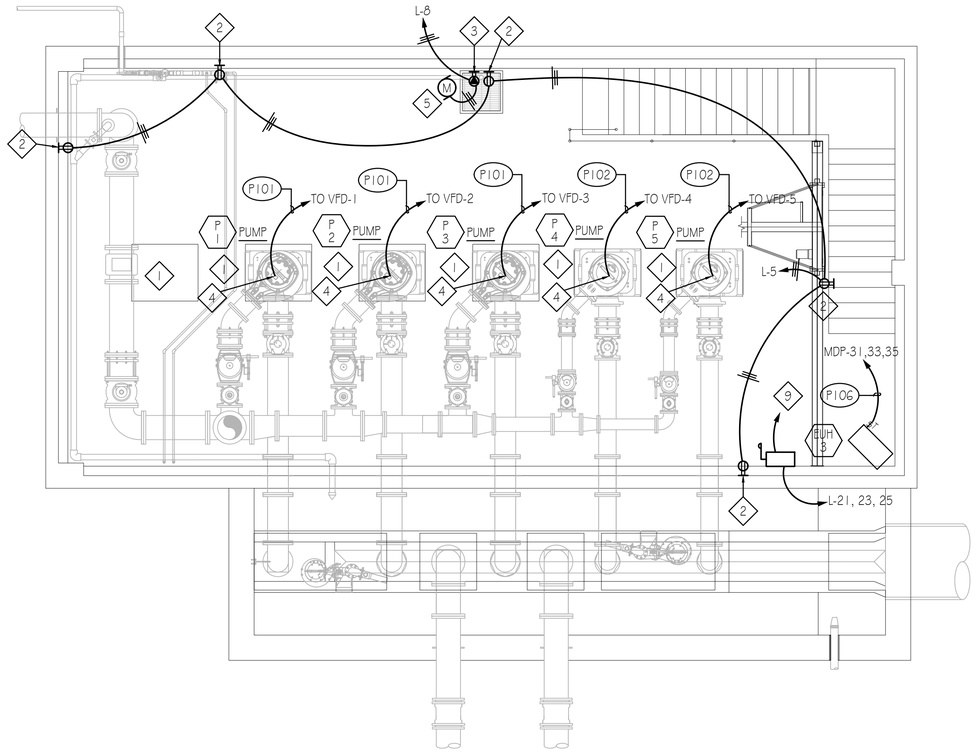


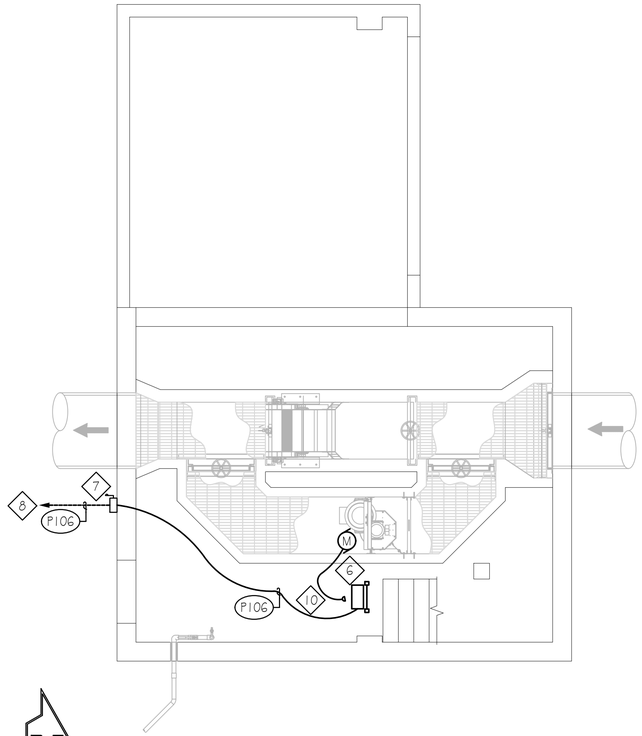


1 EP100 **LOWER LEVEL POWER PLAN**

SCALE: 1/4"=1'-0"

5 0 10

N

## DRAWING NOTES

1. ACCESS HATCH ABOVE, TYPICAL.
2. GFCI WP +48" AFF
3. 20A LOCK GFCI WP +48" AFF
4. SEE MOTOR CONNECTION DETAIL. ALL WIRING AND CONDUIT ROUTING SHALL NOT INTERFERE WITH CRANE MOTION AND OPERATION.
5. SUMP PUMP WITH INTEGRAL FLOAT SWITCH
6. GRINDER
7. GRINDER DISCONNECT. SEE ONE-LINE DIAGRAM. SEE CLASSIFIED TRANSITION DETAIL TO BE INSTALLED ON CLASSIFIED SIDE OF UNCLASSIFIED DISCONNECT. LABEL ON DISCONNECT "THIS BUILDING HAS MULTIPLE DISCONNECTS AND HAS CIRCUITS FED FROM THE BUILDING TO THE SOUTH."
8. TO MOTOR CONTROL PANEL IN PUMP BUILDING
9. TO HOIST CONTROLLER WIRE PER MANUFACTURER'S INSTRUCTIONS. ENSURE ALL WIRING WITHIN THIS LEVEL DOES NOT INTERFERE WITH CRANE MOVEMENT AND OPERATION.
10. INSTALL CLASS I DIV 2 480V/3PH LOCKING PLUG ON GRINDER TO BE STORED ON UPPER LEVEL AND PLACED IN SERVICE AS NEEDED. INSTALL A MATCHING CLASSIFIED RECEPTACLE ON FIBERGLASS STRUT 2 FT ABOVE FLOOR.

PROFESSIONAL ENGINEER
# 11573207-2202
ROBERT J. HILLYER
04/19/2024
STATE OF UTAH

HANSEN ALLEN & LUCE inc ENGINEERS

HEATH Engineering Company

| | | | | | |
|---|---|---|---|---|---|
| DESIGNED RJH | 3 | | · | | |
| DRAFTED KGM | 2 | | | | |
| CHECKED RJH | 1 | | | | |
| DATE MAY 26, 2022 | NO. | DATE | REVISIONS | BY | APVD. |

SCALE ·

SOUTH SALT LAKE

DOWNTOWN SEWER IMPROVEMENTS AND PUMP STATION
ELECTRICAL
DRY PIT POWER PLAN

SHEET EP100

126.42.300

I:\2065801 - DWG\ELEC\SHEET\20658 - EP-100.dwg, 4/19/2024 5:01:55 PM, Heath Engineering cov\GH

## GENERAL NOTES

A. PROVIDE SPARE 2" CONDUIT FOR EACH TRENCH, PROVIDE (2) SPARE 2" CONDUITS BETWEEN PUMP BUILDING AND SCREEN BUILDING, BETWEEN PUMP BUILDING, EXISTING BUILDING AND BETWEEN PUMP BUILDING AND GENERATOR. PROVIDE (1) SPARE 1" CONDUIT BETWEEN EVERY ELECTRICAL DEVICE THAT HAS A CONTROL CONDUIT TO THE PLC.

## DRAWING NOTES

37 SEPARATE OUT THE POWER AND TEMPERATURE SIGNAL WITHIN THE CLASSIFIED TRANSITION. RUN POWER AND TEMPERATURE SIGNAL IN SAME CONDUIT TO CONTROLLER.

38 TO HEADWORKS MOTOR CONTROL PANEL IN PUMP BUILDING.

39 DISCONNECT. SEE ONE-LINE DIAGRAM. SEE CLASSIFIED TRANSITION DETAIL TO BE INSTALLED ON CLASSIFIED SIDE OF UNCLASSIFIED DISCONNECT. LABEL ON DISCONNECT "THIS BUILDING HAS MULTIPLE DISCONNECTS AND HAS CIRCUITS FED FROM THE BUILDING TO THE SOUTH."

1 UTILITY METER.
2 CT ENCLOSURE.
3 PANEL 'L'.
4 GRINDER CONTROL PANEL
5 AUTOMATIC TRANSFER SWITCH.
6 MAIN DISTRIBUTION PANEL 'MDP'.
7 VFD - 15 HP.
8 VFD - 110 HP.
9 AERIGATOR. PROVIDE WITH MANUFACTURER'S CABLE INCLUDING POWER AND TEMPERATURE SHUTDOWN WIRING.
10 PLC.
11 HEADWORKS MOTOR CONTROL PANEL
12 SEE ODOR CONTROL UNIT DETAIL 5 / E-505
13 TRANSFORMER.
14 CLASSIFIED TRANSITION. SEE DETAIL 9 / E-502.
15 FLOW METER.
16 LEVEL METER. HYDRORANGER LT500 LEVEL TRANSMITTER
17 GENERATOR.
18 EQUIPMENT ACCESS HATCH.
19 ODOR CONTROL UNIT DISCONNECT. SEE ONE-LINE DIAGRAM.
20 AERIGATOR SOFT START
21 SEE MOTOR CONNECTION DETAIL.
22 CRANE HOIST DISCONNECT. SEE ONE-LINE DIAGRAM.
23 MOUNT AT 6" ABOVE SINK AND TABLE TOP.
24 50 / 2 WELDER RECEPTACLE.
25 TO UTILITY POLE-MOUNT TRANSFORMER.
26 TO GENERATOR.
27 ODOR CONTROL UNIT.
28 SERVICE DISCONNECT, SEE ONE-LINE DIAGRAM.
29 NOT USED
30 HEADWORKS COMBUSTIBLE GAS ALARM PANEL.
31 MOUNT THE DOOR MOTOR AND CONTROLS ON THE OUTSIDE OF THE BUILDING
32 ROLL UP DOOR MOTOR, UNCLASSIFIED WHEN INSTALLED OUTDOORS
33 ROLL UP DOOR CONTROL, UNCLASSIFIED WHEN INSTALLED OUTDOORS
34 SCREEN MOTOR

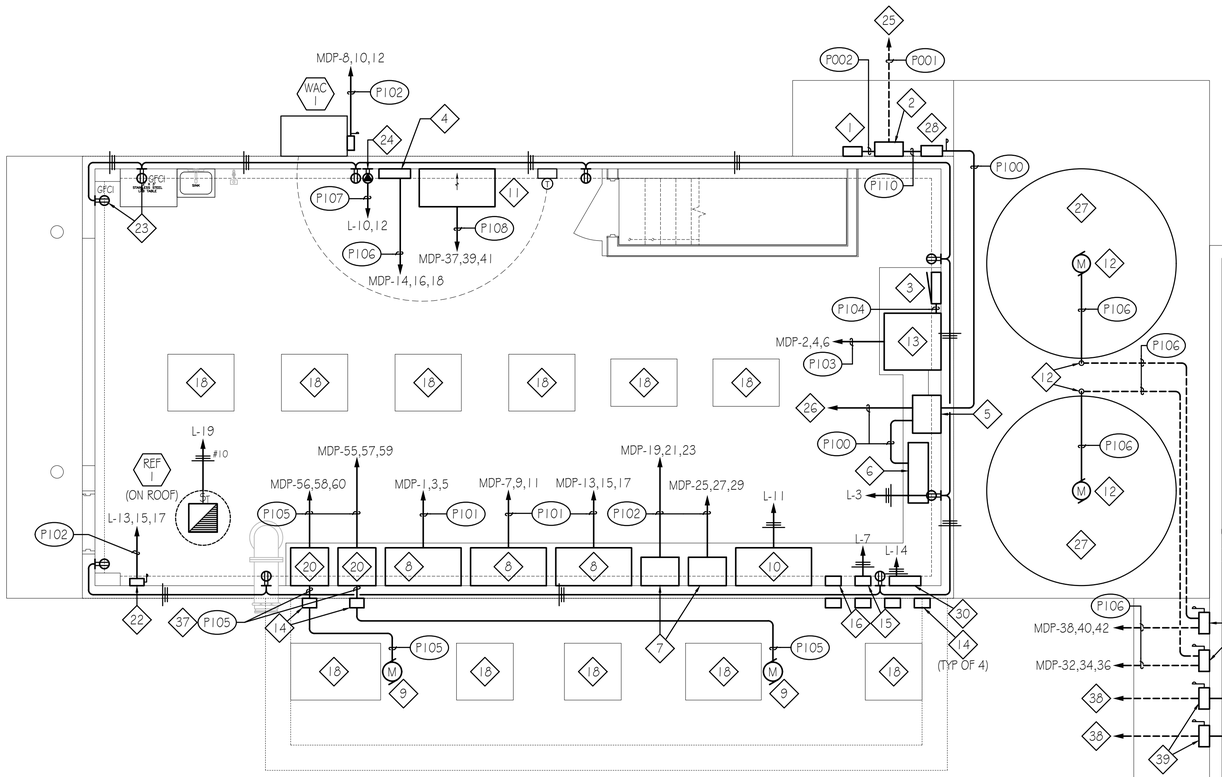


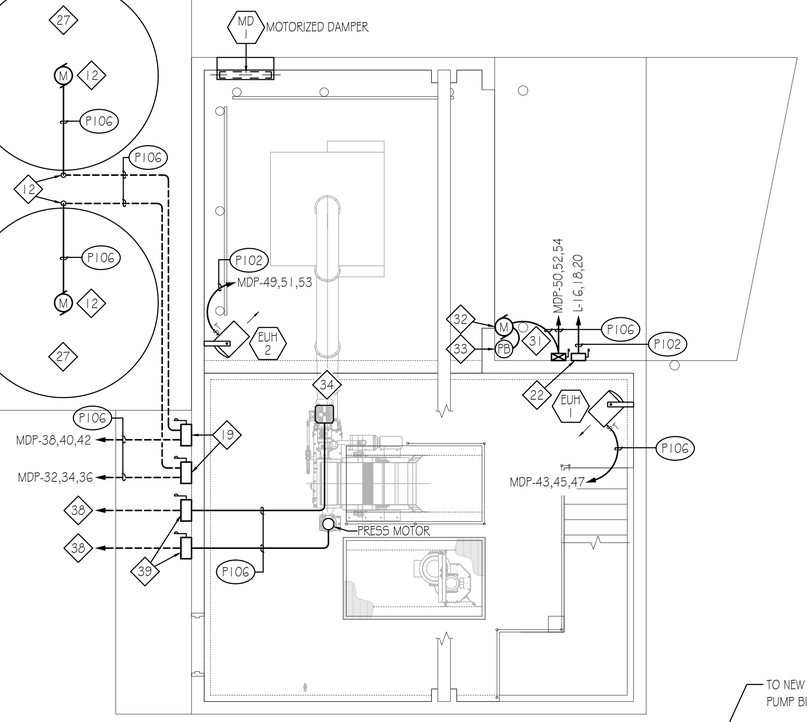


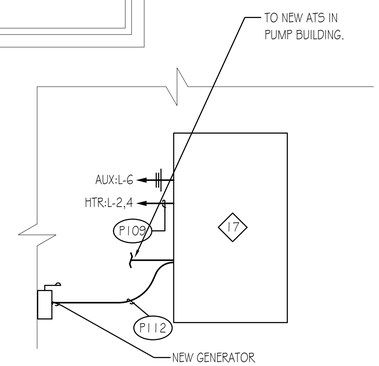


1 EP101 MAIN LEVEL POWER PLAN
SCALE: 1/4"=1'-0"
5 0 10

PROFESSIONAL ENGINEER
# 11573207-2202
ROBERT J. HILLYER
04/19/2024
STATE OF UTAH

HANSEN ALLEN & LUCE inc ENGINEERS
HEATH Engineering Company

| | | | | | |
|---|---|---|---|---|---|
| DESIGNED RJH | 3 | | | | |
| DRAFTED KGM | 2 | | | | |
| CHECKED RJH | 1 | | | | |
| DATE MAY 26, 2022 | NO. | DATE | REVISIONS | BY | APVD. |

SCALE .

SOUTH SALT LAKE

DOWNTOWN SEWER IMPROVEMENTS AND PUMP STATION
ELECTRICAL
TOP FLOOR POWER PLAN

SHEET EP101
126.42.300

I:\26058\01 - DWG\ELEC\SHEET\26058 - EP-101.dwg, 4/19/2024 5:01:59 PM, Heath Engineering co\GJE

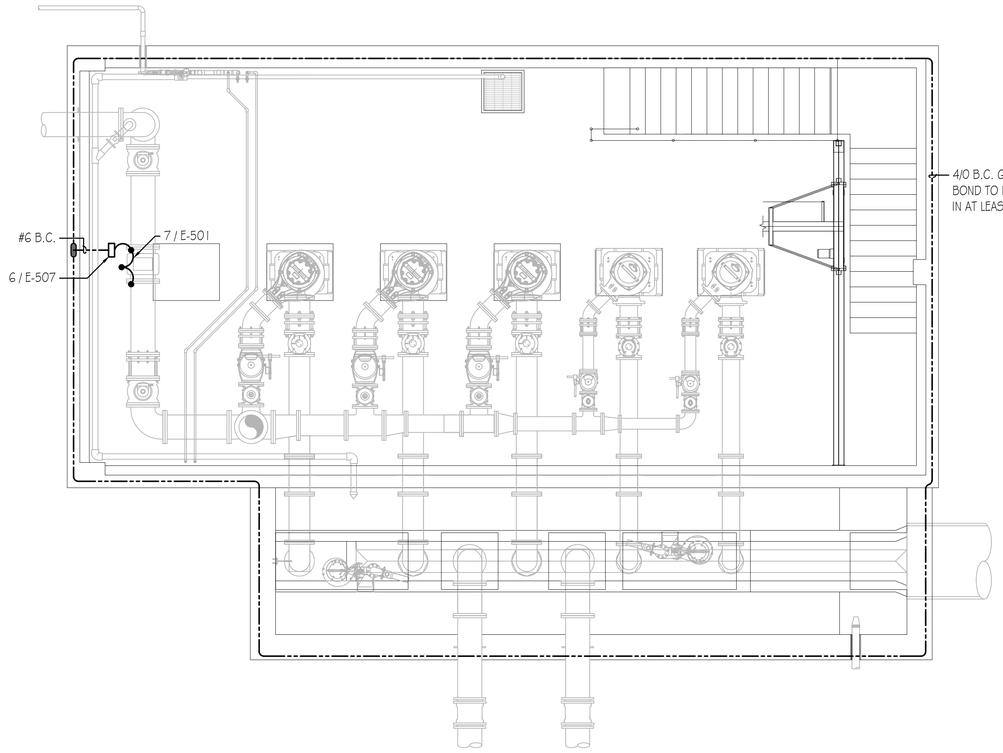


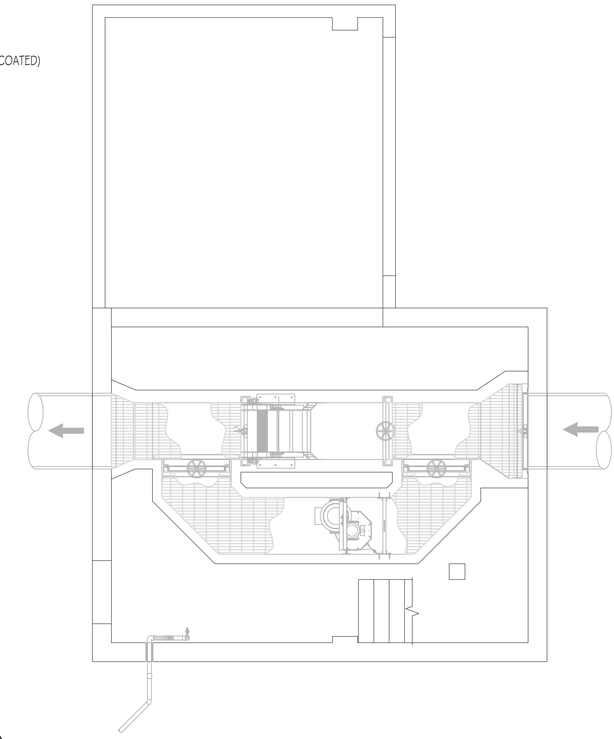

1 / EP102 **LOWER LEVEL GROUNDING PLAN**

SCALE: 1/4"=1'-0"

5 0 10

N

PROFESSIONAL ENGINEER
# 11573207-2202
ROBERT J. HILLYER
04/19/2024
STATE OF UTAH

HANSEN ALLEN & LUCE inc ENGINEERS

HEATH Engineering Company

| | | | | | |
|---|---|---|---|---|---|
| DESIGNED RJH | 3 | | · | | |
| DRAFTED KGM | 2 | | | | |
| CHECKED RJH | 1 | | | | |
| DATE MAY 26, 2022 | NO. | DATE | REVISIONS | BY | APVD. |

SCALE ·

SOUTH SALT LAKE

DOWNTOWN SEWER IMPROVEMENTS AND PUMP STATION
ELECTRICAL
DRY PIT GROUNDING PLAN

SHEET EP102

126.42.300

I:\2008501 - DWG\ELEC\SHEET\20658 - EP-102.dwg, 4/19/2024 5:02:03 PM, Heath Engineering co\CJE

# DRAWING NOTES

1. AUTOMATIC TRANSFER SWITCH
2. PLC
3. TRANSFORMER
4. GENERATOR
5. EQUIPMENT ACCESS HATCH
6. THIS UFER GROUND IS ESTABLISHED IN THE LOWER FOOTING. SHOWN HERE FOR REFERENCE. SEE LOWER LEVEL GROUNDING PLAN.
7. SERVICE DISCONNECT
8. TO LIGHTNING PROTECTION OF BOTH BUILDINGS.

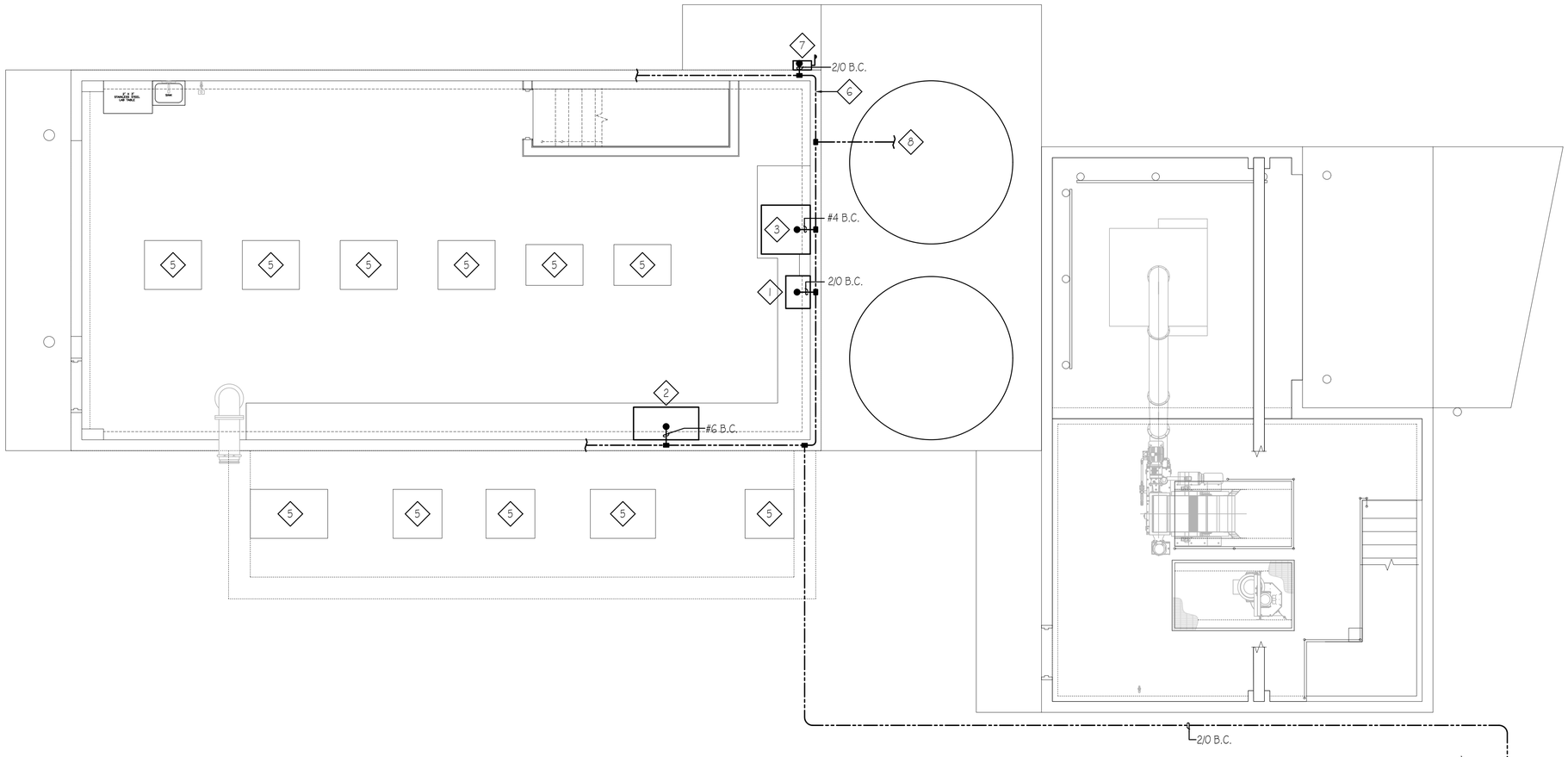




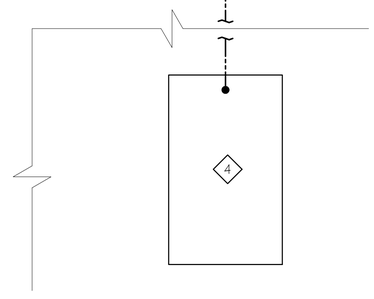


1 EP103 MAIN LEVEL GROUNDING PLAN
SCALE: 1/4"=1'-0"
5 0 10
N

PROFESSIONAL ENGINEER
# 11573207-2202
ROBERT J. HILLYER
09/19/2024
STATE OF UTAH

HANSEN ALLEN & LUCE inc ENGINEERS

HEATH Engineering Company

| | | | | | |
|---|---|---|---|---|---|
| DESIGNED RJH | 3 | | · | | |
| DRAFTED KGM | 2 | | | | |
| CHECKED RJH | 1 | | | | |
| DATE MAY 26, 2022 | NO. | DATE | REVISIONS | BY | APVD. |

SCALE ·

SOUTH SALT LAKE

DOWNTOWN SEWER IMPROVEMENTS AND PUMP STATION
ELECTRICAL
TOP FLOOR GROUNDING PLAN

SHEET EP103

126.42.300

I:\2005801 - DWG\ELEC\SHEET\20058 - EP-103.dwg, 4/19/2024 5:02:06 PM, Heath Engineering co/GJE

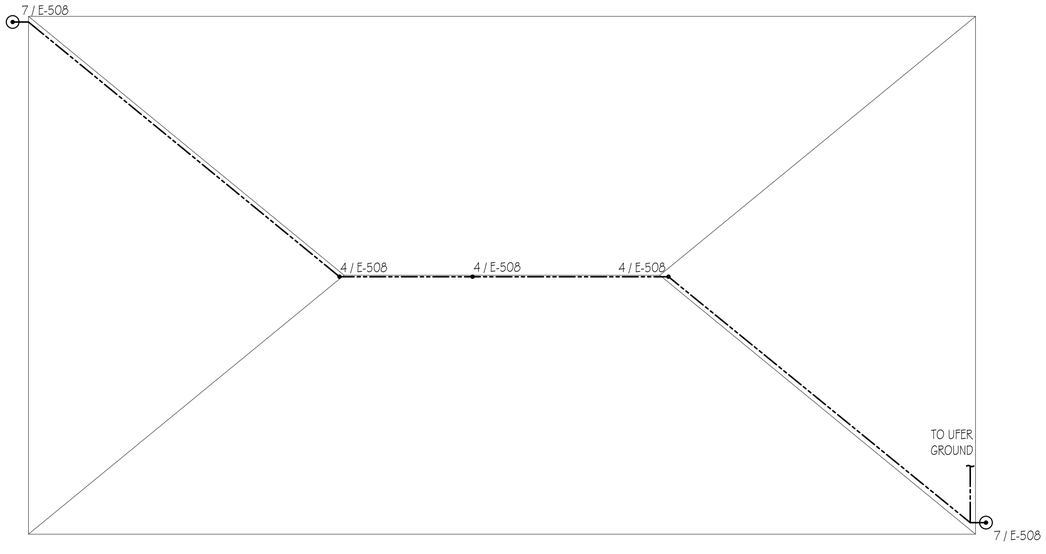


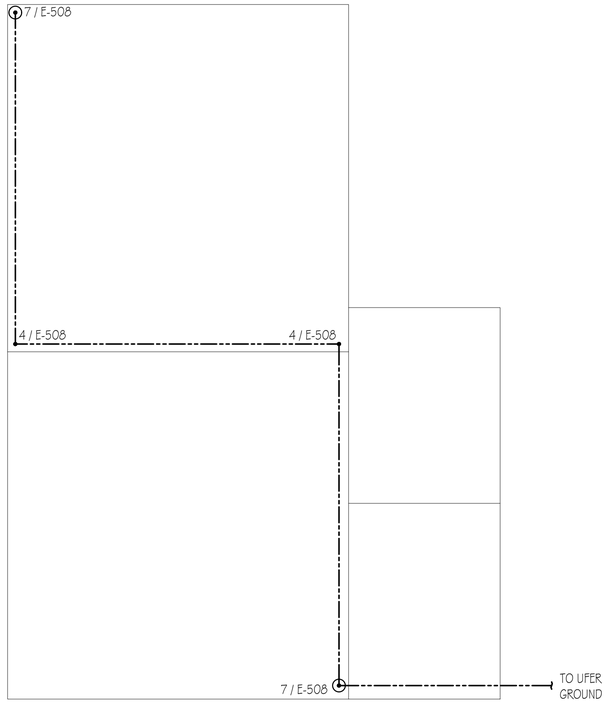


1 EP104 **ROOF LIGHTNING PROTECTION PLAN**

SCALE: 1/4"= 1'-0"

5 0 10

N

PROFESSIONAL ENGINEER
# 11573207-2202
ROBERT J. HILLYER
04/19/2024
STATE OF UTAH

HANSEN ALLEN & LUCE inc ENGINEERS

HEATH Engineering Company

| | | | | | |
|---|---|---|---|---|---|
| DESIGNED RJH | 3 | | · | | |
| DRAFTED KGM | 2 | | | | |
| CHECKED RJH | 1 | | | | |
| DATE MAY 26, 2022 | NO. | DATE | REVISIONS | BY | APVD. |

SCALE ·

SOUTH SALT LAKE

DOWNTOWN SEWER IMPROVEMENTS AND PUMP STATION
ELECTRICAL
LIGHTNING PROTECTION PLANS

SHEET EP104

126.42.300

I:\2005800 - DWG\ELEC\SHEET\20058 - EP-104.dwg, 4/19/2024 5:02:09 PM, Heath Engineering co\GJE

## DRAWING NOTES

1. FROM SWITCH AT UPPER LEVEL TOP OF STAIRS.
2. MOUNT AT 8'-0" A.F.F. TYPICAL OF ALL PIT LIGHTS.
3. FROM LIGHTING CIRCUIT ABOVE.
4. MOUNT AT 8'-0" MINIMUM ABOVE STAIR HEIGHT.

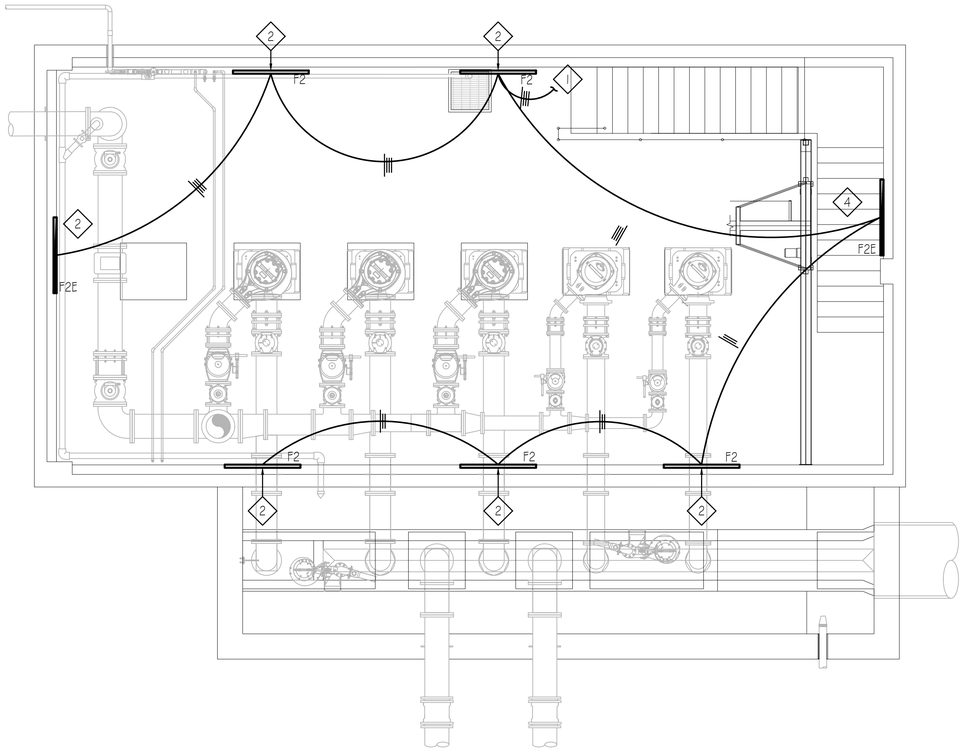


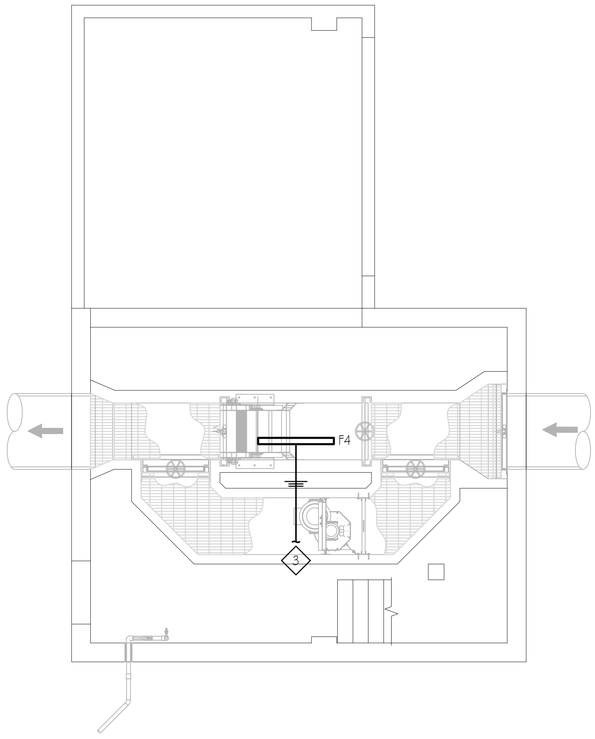


1 / EL100 **LOWER LEVEL LIGHTING PLAN**

SCALE: 1/4" = 1'-0"

5 0 10

N


PROFESSIONAL ENGINEER
# 11573207-2202
ROBERT J. HILLYER
04/19/2024
STATE OF UTAH


HANSEN ALLEN & LUCE inc ENGINEERS

HEATH Engineering Company

| | | | | | |
|---|---|---|---|---|---|
| DESIGNED RJH | 3 | | | | |
| DRAFTED KGM | 2 | | | | |
| CHECKED RJH | 1 | | | | |
| DATE MAY 26, 2022 | NO. | DATE | REVISIONS | BY | APVD. |

SCALE .

SOUTH SALT LAKE

DOWNTOWN SEWER IMPROVEMENTS AND PUMP STATION
ELECTRICAL
LOWER LEVEL LIGHTING PLANS

SHEET EL100

126.42.300


I:\2005801 - SWG\ELEC\SHEET\200558 - EL-100.dwg, 4/19/2024 5:01:48 PM, Heath Engineering cox\GIE

## DRAWING NOTES

1. POWER AND SWITCH FOR LOWER LEVEL.
2. CLASSIFIED TRANSITION REQUIRED AT WALL PENETRATION.
3. TO LIGHT FIXTURE BELOW.

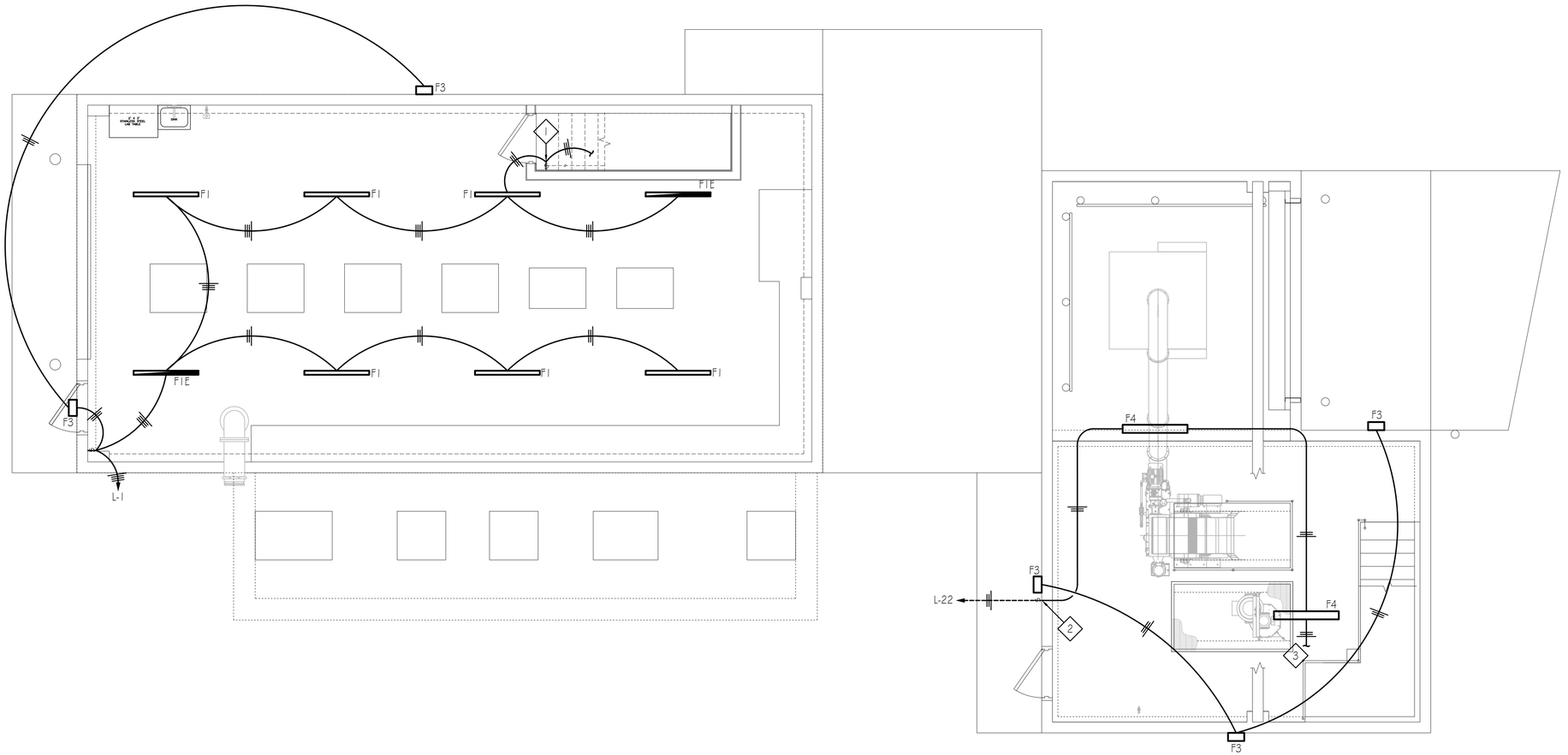


1 / EL101 MAIN LEVEL LIGHTING PLAN

SCALE: 1/4"=1'-0"

5 0 10

N

ROBERT J. HILLYER # 11573207-2202 PROFESSIONAL ENGINEER 04/19/2024 STATE OF UTAH

HANSEN ALLEN & LUCE inc ENGINEERS

HEATH Engineering Company

| | | | | | |
|---|---|---|---|---|---|
| DESIGNED RJH | 3 | | · | | |
| DRAFTED KGM | 2 | | | | |
| CHECKED RJH | 1 | | | | |
| DATE MAY 26, 2022 | NO. | DATE | REVISIONS | BY | APVD. |

SCALE ·

SOUTH SALT LAKE

DOWNTOWN SEWER IMPROVEMENTS AND PUMP STATION
ELECTRICAL
UPPER FLOOR LIGHTING PLANS

SHEET EL101

126.42.300

I:\26085\01 - DWG\ELEC\SHEET\26058 - EL-101.dwg, 4/19/2024 5:01:52 PM, Heath Engineering co\GJE

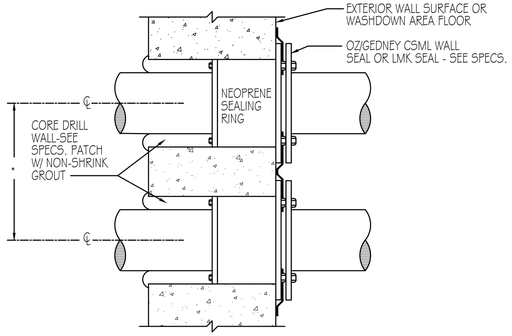


## UNDERGROUND CONDUIT WALL SEAL OR WASHDOWN FLOOR

SCALE: NONE — 6 / E-501

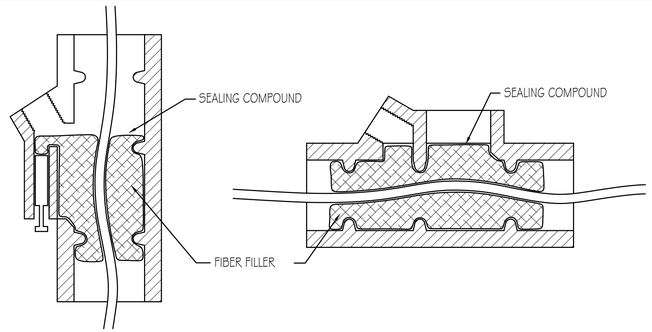


**VERTICAL CONDUIT** **HORIZONTAL CONDUIT**

## TYPICAL CONDUIT SEAL DAMMING AND POURING

SCALE: NONE — 3 / E-501

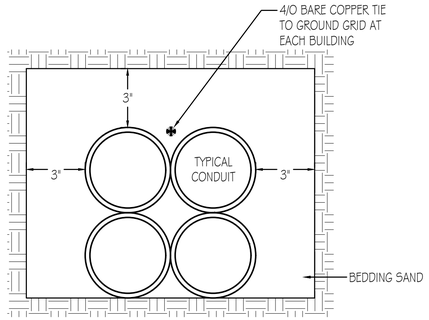


**SECTION A-A**

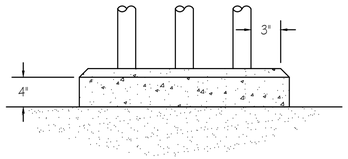


HOUSEKEEPING CURB REQUIRED AT ALL INTERIOR WALL LOCATIONS FOR SINGLE AND MULTIPLE CONDUIT RISERS. CONDUIT RISERS SHALL BE COUPLED SO THAT SINGLE CONDUITS ARE SIX FEET APART MINIMUM.

## CONCRETE HOUSEKEEPING CURB DETAIL

SCALE: NONE — 4 / E-501

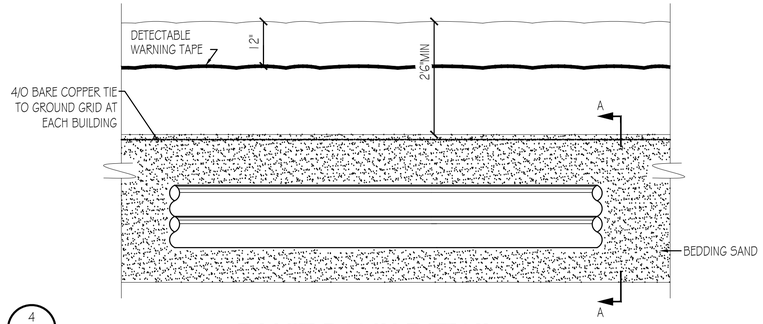


## DUCT BANK DETAIL

SCALE: NONE — 1 / E-501

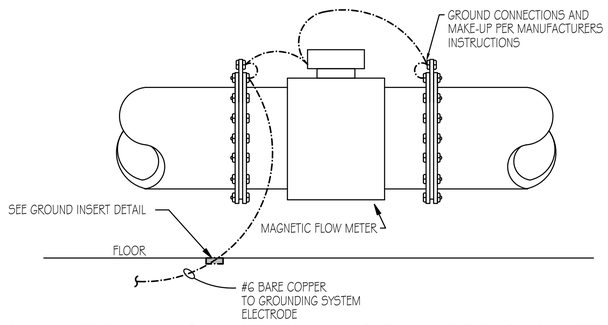


## FLOW METER GROUND RING CONNECTION DETAIL

SCALE: NONE — 7 / E-501

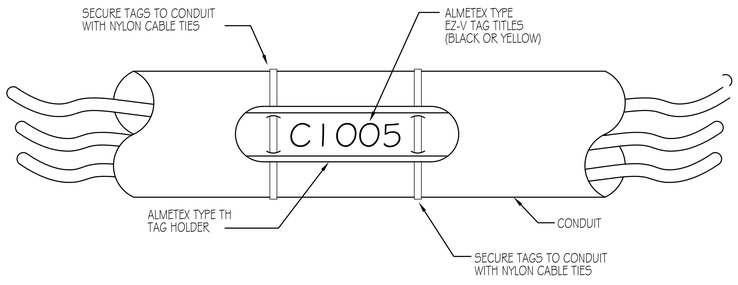


## CONDUIT MARKING SYSTEM

SCALE: NONE — 8 / E-501

TYPICAL OF ALL CONDUITS

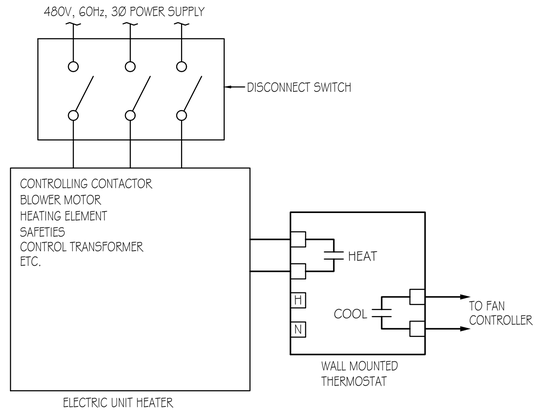


## ELECTRIC UNIT HEATER CONTROL DIAGRAM

SCALE: NONE — 5 / E-501

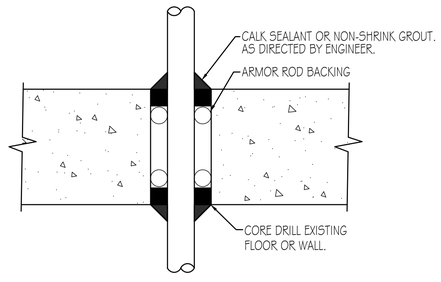


## EXISTING WALL/DRY FLOOR PENETRATIONS

SCALE: NONE — 2 / E-501

PROFESSIONAL ENGINEER # 11573207-2202 ROBERT J. HILLYER 04/19/2024 STATE OF UTAH

HANSEN ALLEN & LUCE inc ENGINEERS

HEATH Engineering Company

| | | | | | |
|---|---|---|---|---|---|
| DESIGNED RJH | 3 | | · | | |
| DRAFTED KGM | 2 | | | | |
| CHECKED RJH | 1 | | | | |
| DATE MAY 26, 2022 | NO. | DATE | REVISIONS | BY | APVD. |

SCALE ·

SOUTH SALT LAKE

DOWNTOWN SEWER IMPROVEMENTS AND PUMP STATION
ELECTRICAL
DETAILS

SHEET E–501

126.42.300

I:\2008501 - DWG\ELEC\SHEET\20658 - E-501.dwg, 4/19/2024 5:00:51 PM, Heath Engineering.ctb/GJE

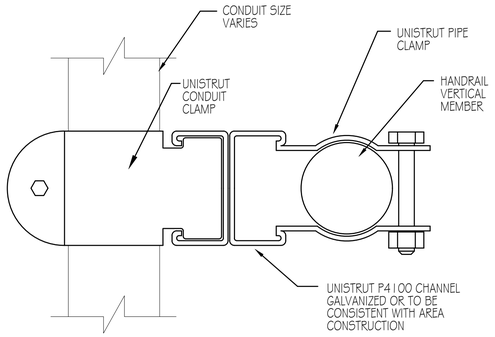


**TOP VIEW**

## CONDUIT ATTACHMENT TO HANDRAIL

8 / E-502

SCALE: NONE
TYPICAL

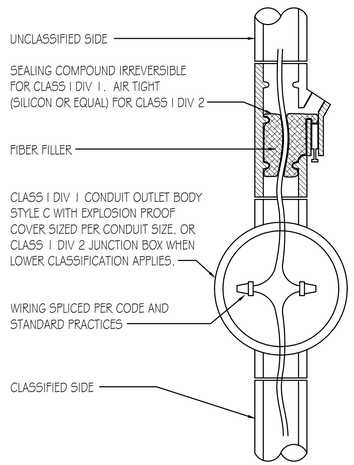


## CLASSIFIED TRANSITION DETAIL

9 / E-502

SCALE: NONE
TYPICAL

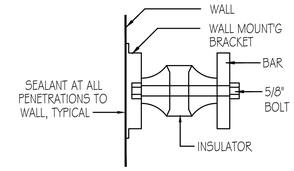


**MOUNTING DETAIL**

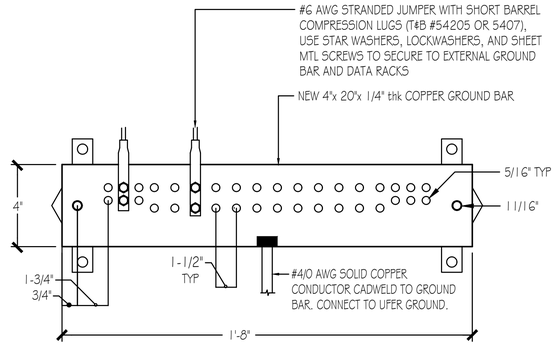


NOTES:
1. ALL HARDWARE STAINLESS STEEL INCLUDING BELLVILLES COAT ALL SURFACE WITH KOPR-SHIELD BEFORE MATING.
2. FOR GROUND BOND TO STEEL ONLY: INSERT A TOOTH WASHER BETWEEN LUG AND STEEL, COAT ALL SURFACES WITH KOPR-SHIELD.
3. ALL HOLES ARE COUNTERSUNK 1/16".

## GROUND BAR

6 / E-502

SCALE: NONE

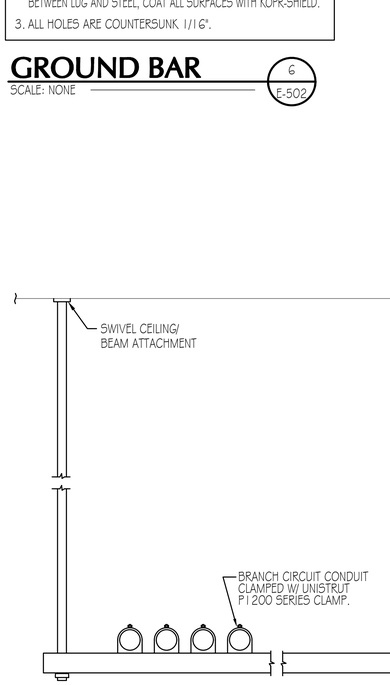


## CONDUIT SUPPORT DETAIL

7 / E-502

SCALE: NONE
TYPICAL

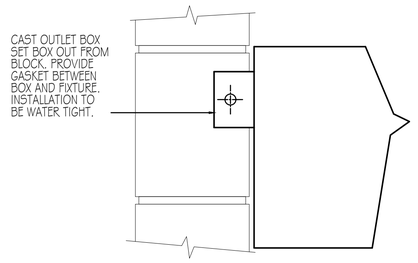


## WALL HUNG FIXTURE MOUNTING DETAIL

3 / E-502

SCALE: NONE
TYPICAL OF ALL WALL HUNG FIXTURES

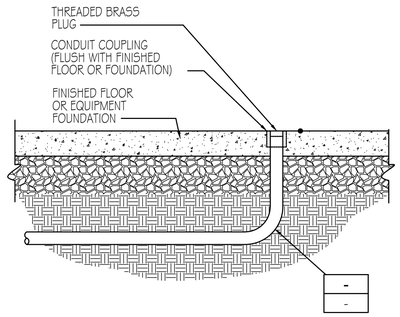


## FLUSH CONDUIT TERMINATION

4 / E-502

SCALE: NONE
TYPICAL

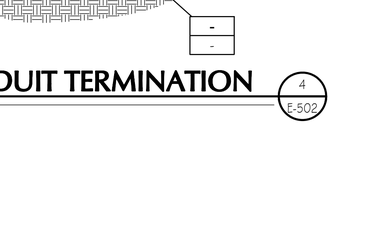


## VFD GROUNDING DIAGRAM

5 / E-502

SCALE: NONE

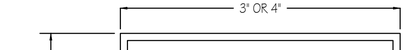


NOTES:
1. ALL LETTERS TO BE 1/4" UNLESS NOTED OTHERWISE.
2. ALL NAMEPLATES TO BE MOUNTED ON THE VERTICAL CENTERLINE OF THE CUBICAL OR DEVICE.
3. ATTACH ALL NAMEPLATES WITH STAINLESS STEEL SCREWS.
4. PROVIDE BLANK NAMEPLATES FOR ALL SPARE AND FUTURE DEVICES.

## NAMEPLATE DETAIL

1 / E-502

SCALE: NONE
TYPICAL OF ALL EQUIPMENT

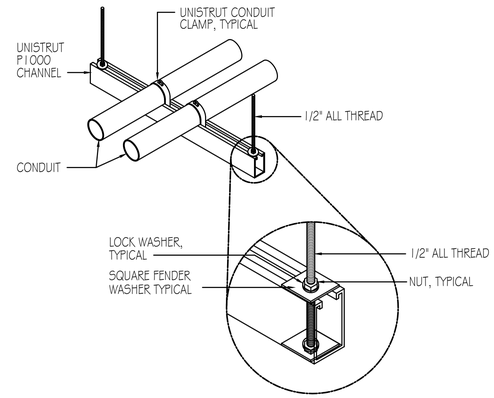


## CONDUIT SUPPORT DETAIL

2 / E-502

SCALE: NONE
TYPICAL

PROFESSIONAL ENGINEER
# 11573207-2202
ROBERT J. HILLYER
04/19/2024
STATE OF UTAH

| | | | | | | | |
|---|---|---|---|---|---|---|---|
| HANSEN ALLEN & LUCE inc ENGINEERS | HEATH Engineering Company | DESIGNED RJH | 3 | | | | SCALE . |
| | | DRAFTED KGM | 2 | | | | |
| | | CHECKED RJH | 1 | | | | |
| | | DATE MAY 26, 2022 | NO. | DATE | REVISIONS | BY APVD. | |

SOUTH SALT LAKE

DOWNTOWN SEWER IMPROVEMENTS AND PUMP STATION
ELECTRICAL
DETAILS

SHEET E-502

126.42.300

I:\2008\801 - DWG\ELEC\SHEET\2008 - E-502.dwg, 4/19/2024 5:00:54 PM, Heath Engineering co\GJE

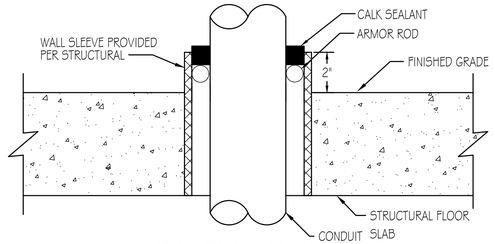


## CONCRETE SLAB

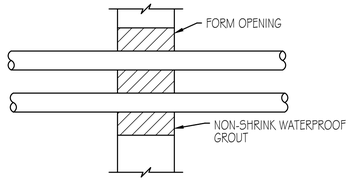


## CONCRETE WALL LOCATIONS

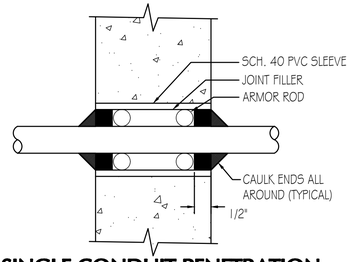


## SINGLE CONDUIT PENETRATION FOR ABOVE GRADE PENETRATIONS ONLY

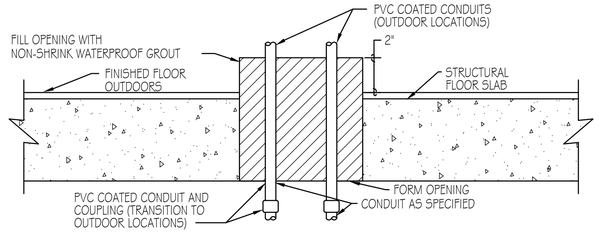


## CONCRETE SLAB WET LOCATIONS

## TYPICAL ABOVE GROUND CONDUIT PENETRATIONS FOR NEW WALLS/FLOORS

3 / E-503

SCALE: NONE

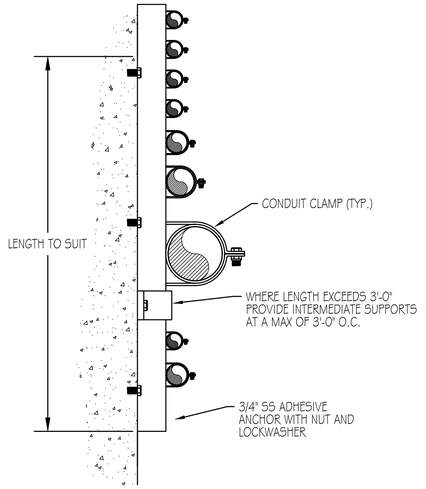


## CONDUIT SUPPORT

1 / E-503

SCALE: NONE
TYPICAL

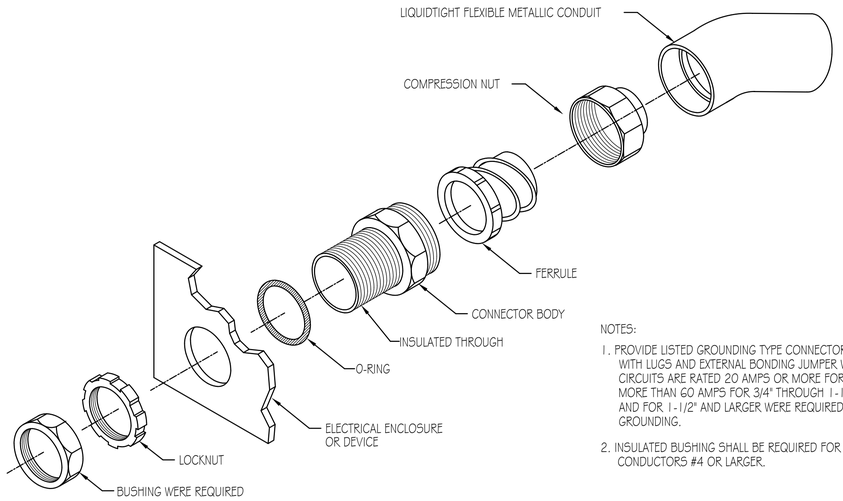


NOTES:

1. PROVIDE LISTED GROUNDING TYPE CONNECTORS WITH LUGS AND EXTERNAL BONDING JUMPER WHEN CIRCUITS ARE RATED 20 AMPS OR MORE FOR 1/2", MORE THAN 60 AMPS FOR 3/4" THROUGH 1-1/4", AND FOR 1-1/2" AND LARGER WERE REQUIRED FOR GROUNDING.
2. INSULATED BUSHING SHALL BE REQUIRED FOR CONDUCTORS #4 OR LARGER.

## TYPICAL FLEXIBLE CONDUIT CONNECTION DETAIL

5 / E-503

SCALE: NONE

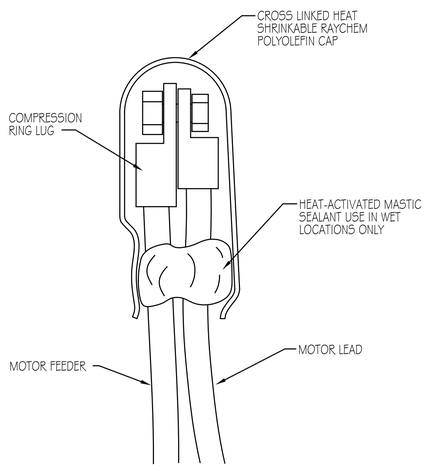


## TYPICAL MOTOR LEAD TERMINATION

4 / E-503

SCALE: NONE
TYPICAL

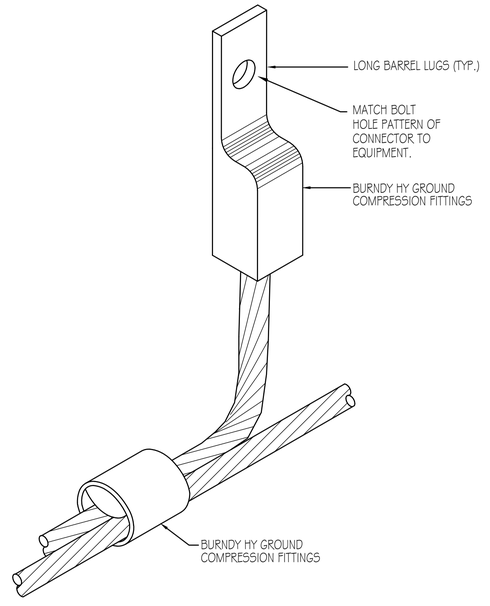


## EQUIPMENT GROUNDING CONNECTION

2 / E-503

SCALE: NONE
TYPICAL

PROFESSIONAL ENGINEER
# 11573207-2202
ROBERT J. HILLYER
04/19/2024
STATE OF UTAH

HANSEN ALLEN & LUCE inc ENGINEERS

HEATH Engineering Company

| | | | | | | |
|---|---|---|---|---|---|---|
| DESIGNED RJH | 3 | | . | | | SCALE |
| DRAFTED KGM | 2 | | | | | . |
| CHECKED RJH | 1 | | | | | |
| DATE MAY 26, 2022 | NO. | DATE | REVISIONS | BY | APVD. | |

SOUTH SALT LAKE

DOWNTOWN SEWER IMPROVEMENTS AND PUMP STATION
ELECTRICAL
DETAILS

SHEET
E-503
126.42.300

I:\2005801 - DWG\ELEC\SHEET\2005S - E-503.dwg, 4/19/2024 5:00:57 PM, Heath Engineering csvGJE

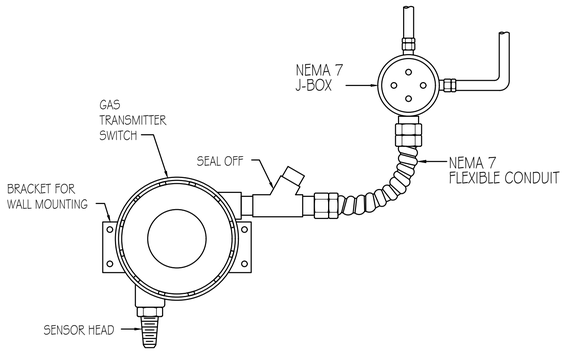


## GAS SENSOR AND TRANSMITTER DETAIL

NO SCALE — 6 / E-504

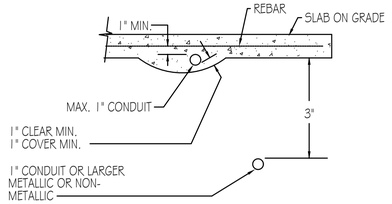


## CONDUIT PLACEMENT

SCALE: NONE
TYPICAL — 4 / E-504

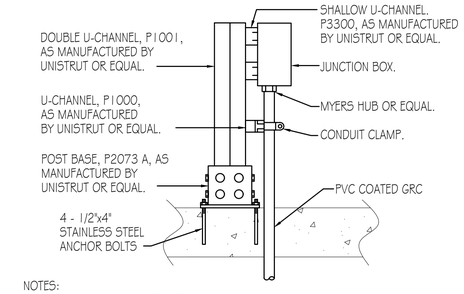


NOTES:
1. IN CORROSIVE AREAS PROVIDE STAINLESS STEEL U-CHANNEL.
2. OMIT POST BASE WHEN MOUNTING TO SIDE OF ABOVE GRADE STRUCTURE.
3. PROVIDE HARDWARE OF SAME MATERIAL AS U-CHANNEL.

## JUNCTION BOX MOUNTING DETAIL

SCALE: NONE — 1 / E-504

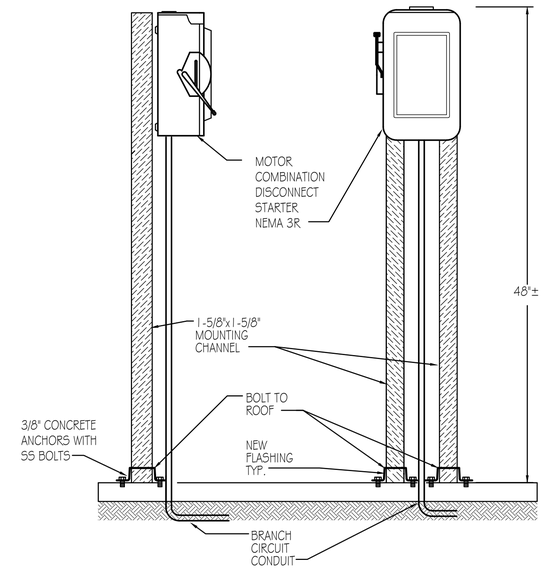


## MOTOR COMBINATION DISCONNECT STARTER DETAIL

SCALE: NONE — 5 / E-504

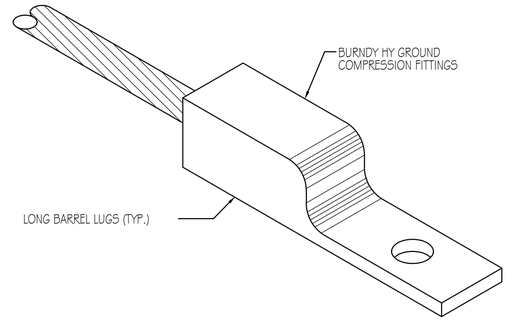


## BONDING LUG

SCALE: NONE — 2 / E-504

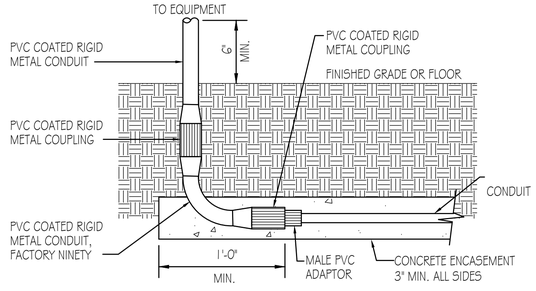


## CONDUIT RISER

SCALE: NONE
TYPICAL — 3 / E-504

ROBERT J. HILLYER
# 11573207-2202
04/19/2024
STATE OF UTAH
PROFESSIONAL ENGINEER

HANSEN ALLEN & LUCE inc ENGINEERS

HEATH Engineering Company

| | | | | | |
|---|---|---|---|---|---|
| DESIGNED RJH | 3 | | | | |
| DRAFTED KGM | 2 | | | | |
| CHECKED RJH | 1 | | | | |
| DATE MAY 26, 2022 | NO. | DATE | REVISIONS | BY | APVD. |

SCALE: .

SOUTH SALT LAKE

DOWNTOWN SEWER IMPROVEMENTS AND PUMP STATION
ELECTRICAL
DETAILS

SHEET
E-504
126.42.300

I:\2005\01 - DWG\ELEC\SHEET\2005S - E-504.dwg, 4/19/2024 5:01:00 PM, Heath Engineering csvGJE

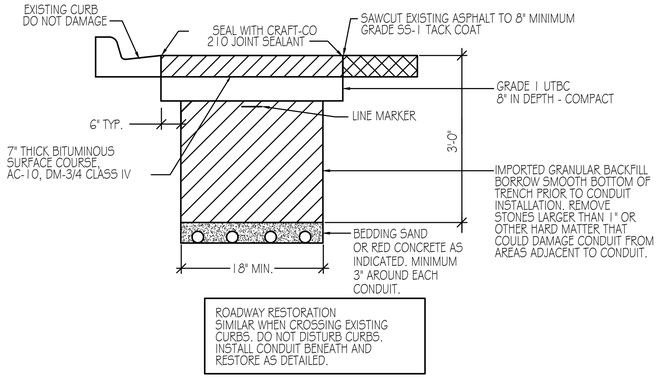


## TRENCH DETAIL-ROADWAY RESTORATION

SCALE: NONE — 6 / E-505

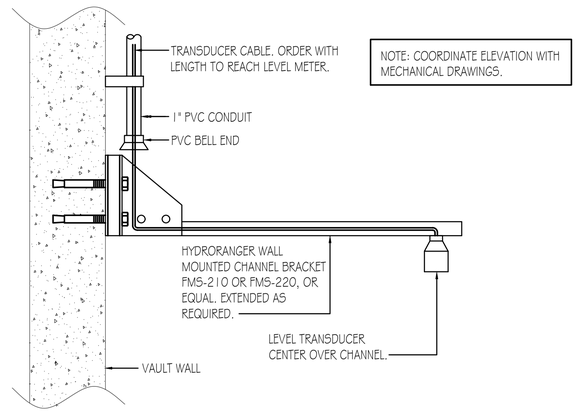


## HEADWORKS TRANSDUCER MOUNTING DETAIL

SCALE: NONE — 3 / E-505

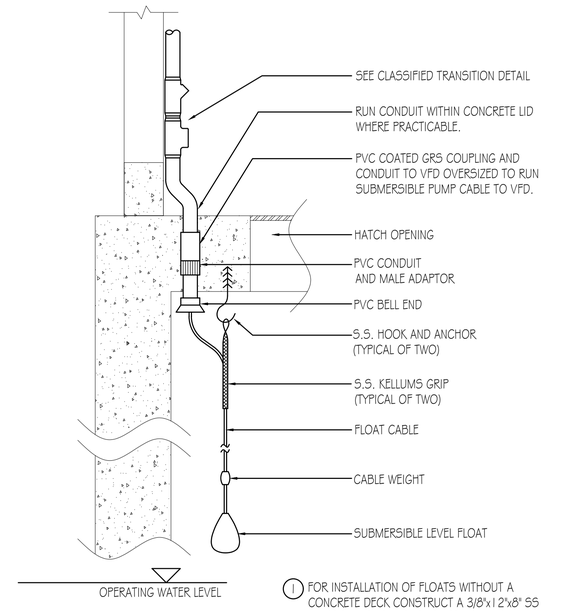


(1) FOR INSTALLATION OF FLOATS WITHOUT A CONCRETE DECK CONSTRUCT A 3/8"x12"x8" SS PLATE SUPPORT ANCHORED TO WALL AT MINIMUM 4 PLACES. WELD A 3/8"x6"x12" SS GUSSET TO THE BOTTOM OF PLATE SUPPORT.

## LEVEL FLOAT MOUNTING DETAIL

SCALE: NONE — 1 / E-505

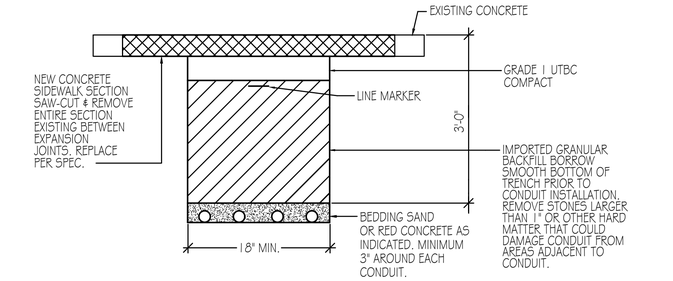


## TRENCH DETAIL-SIDEWALK RESTORATION

SCALE: NONE — 7 / E-505

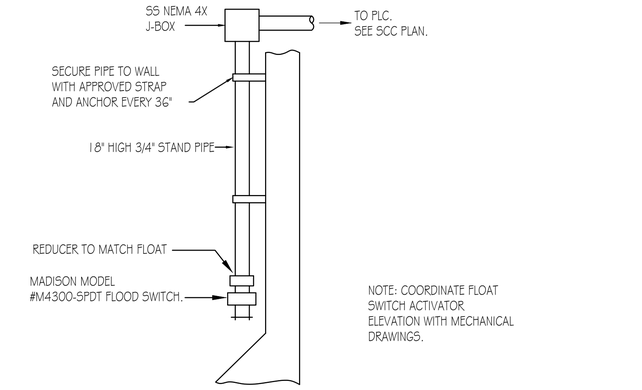


## FLOOD FLOAT SWITCH INSTALLATION

NO SCALE — 4 / E-505

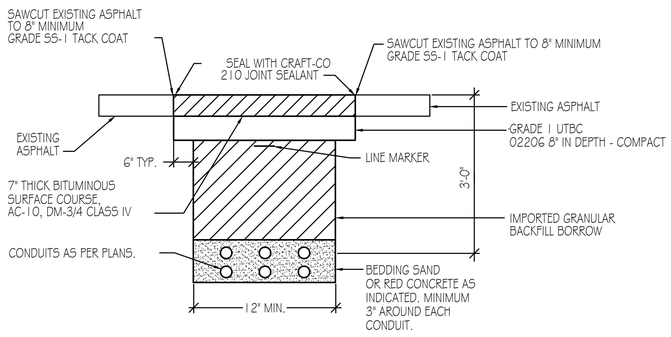


## TRENCH DETAIL-ROADWAY RESTORATION

SCALE: NONE — 8 / E-505

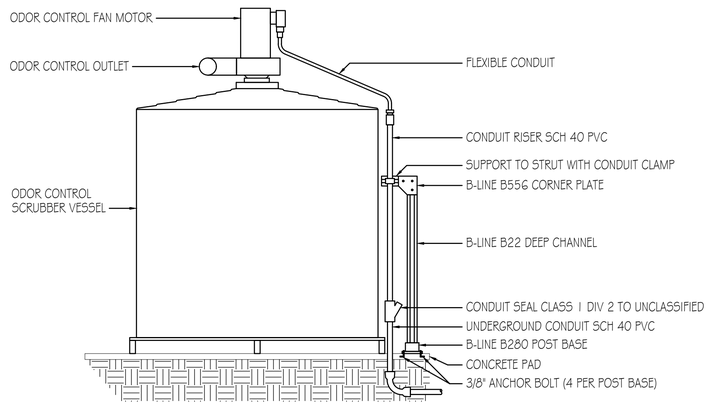


## ODOR CONTROL UNIT DETAIL

NO SCALE — 5 / E-505

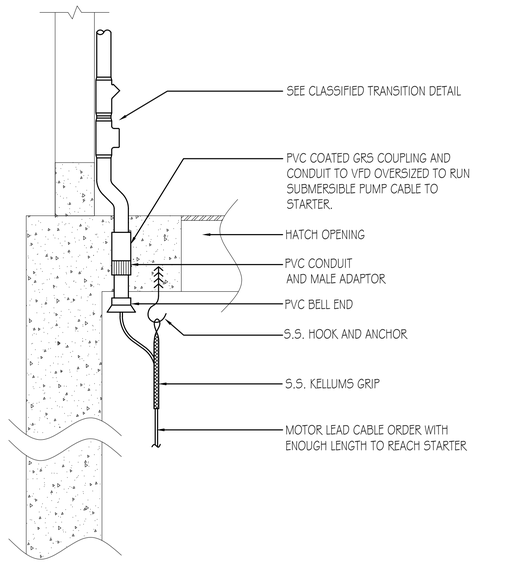


## AERIGATOR LEAD MOUNTING DETAIL

SCALE: NONE — 2 / E-505

PROFESSIONAL ENGINEER
# 11573207-2202
ROBERT J. HILLYER
04/01/2024
STATE OF UTAH

| | | | | | | | |
|---|---|---|---|---|---|---|---|
| HANSEN ALLEN & LUCE inc ENGINEERS | HEATH Engineering Company | DESIGNED RJH | 3 | | · | | |
| | | DRAFTED KGM | 2 | | | | |
| | | CHECKED RJH | 1 | | | | |
| | | DATE MAY 26, 2022 | NO. | DATE | REVISIONS | BY | APVD. |

SCALE: ·

SOUTH SALT LAKE

DOWNTOWN SEWER IMPROVEMENTS AND PUMP STATION
ELECTRICAL
DETAILS

SHEET E-505

126.42.300

I:\2005801 - DWG\ELEC\SHEET\200505 - E-505.dwg, 4/19/2024 5:01:04 PM, Heath Engineering co\GJE

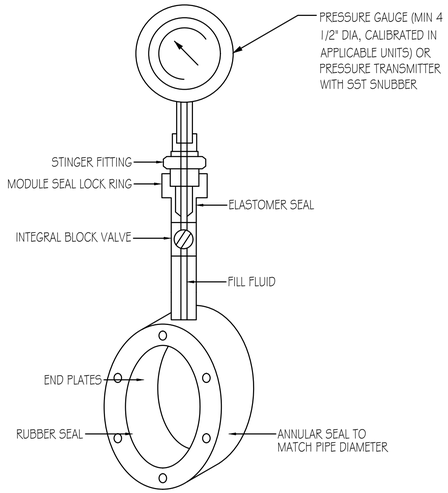


## PRESSURE GAUGE OR PRESSURE SWITCH WITH ANNULAR SEAL

5 E-506

NO SCALE

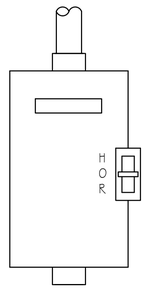


## EQUIPMENT HAND OFF REMOTE SWITCH

6 E-506

NO SCALE OPEN / CLOSE AND POSITION POT SWITCHERS SIMILAR

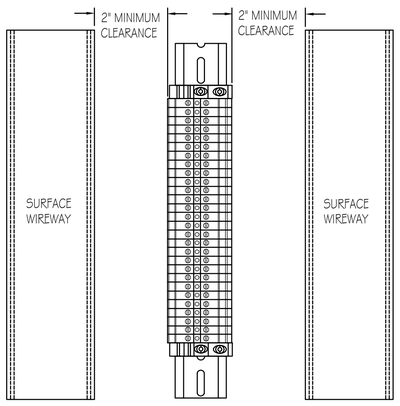


## TERMINAL BLOCK CLEARANCE DETAIL

7 E-506

NO SCALE

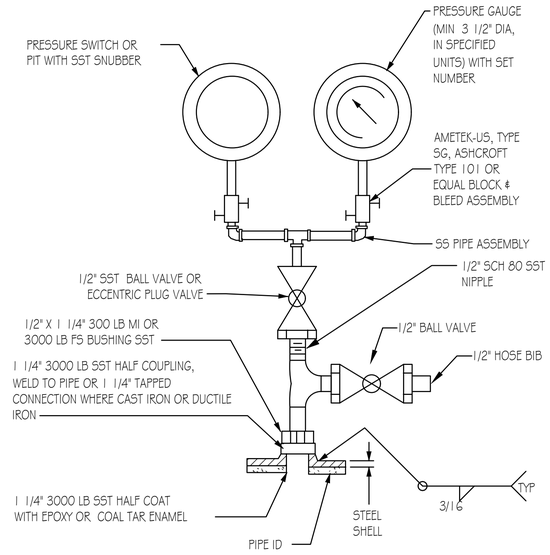


NOTE: SEE SPECIFICATION SECTIONS 15183 AND 17100

## PRESSURE GAUGE AND PRESSURE SWITCH/PIT

3 E-506

NO SCALE (CLEAN WATER ONLY)

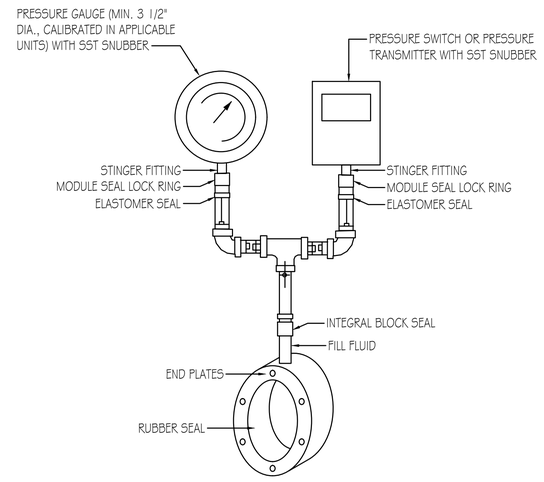


## PRESSURE GAUGE AND PRESSURE SWITCH WITH ANNULAR SEAL

4 E-506

NO SCALE

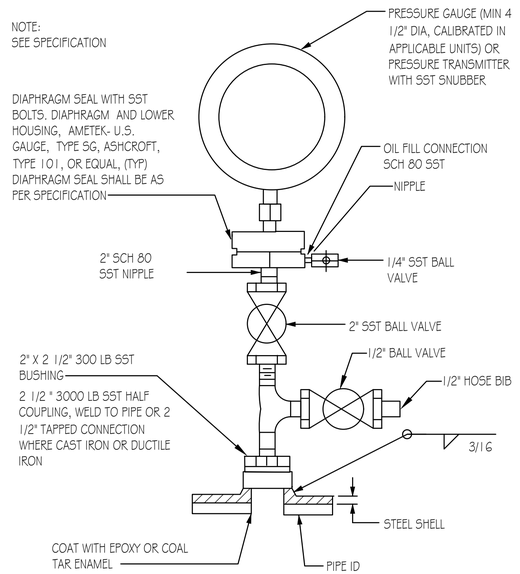


## PRESSURE GAUGE OR PRESSURE SWITCH WITH DIAPHRAGM SEAL

1 E-506

NO SCALE

NOTE:
SEE SPECIFICATIONS:

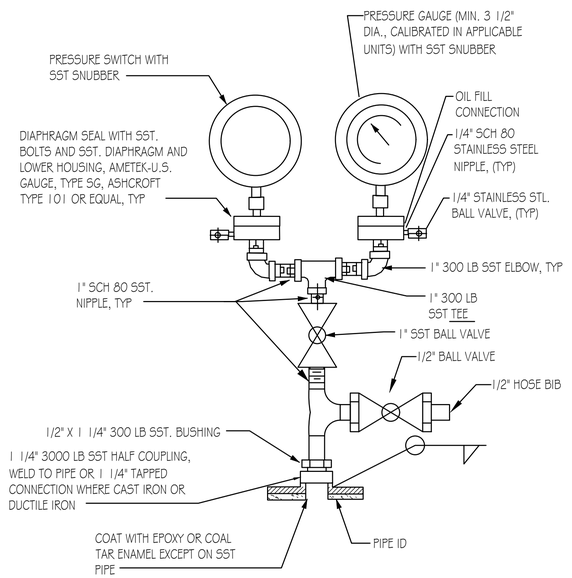


## PRESSURE GAUGE AND PRESSURE SWITCH WITH DIAPHRAGM SEAL

2 E-506

NO SCALE

PROFESSIONAL ENGINEER
# 11573207-2202
ROBERT J. HILLYER
04/19/2024
STATE OF UTAH

| | | | | | | |
|---|---|---|---|---|---|---|
| DESIGNED RJH | 3 | | . | | | SCALE . |
| DRAFTED KGM | 2 | | | | | |
| CHECKED RJH | 1 | | | | | |
| DATE MAY 26, 2022 | NO. | DATE | REVISIONS | BY | APVD. | |

HANSEN ALLEN & LUCE inc ENGINEERS

HEATH Engineering Company

SOUTH SALT LAKE

DOWNTOWN SEWER IMPROVEMENTS AND PUMP STATION
ELECTRICAL
DETAILS

SHEET E-506

126.42.300

I:\126.42.300\01 - DWG\ELEC\SHEET\126.42.300 - E-506.dwg, 4/19/2024 5:01:07 PM, Heath Engineering co\GJE

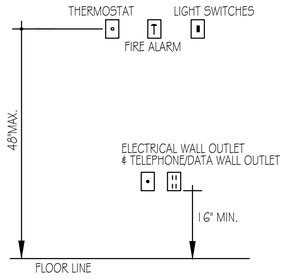


## MOUNTING HEIGHTS FOR ELECTRICAL DEVICES

SCALE: NONE — 6 / E-507

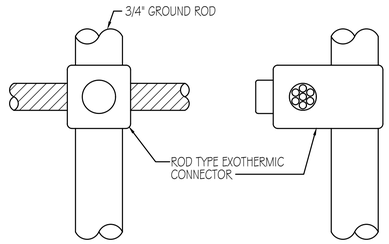


## CABLE TO ROD CONNECTION DETAIL

SCALE: NONE
TYPICAL — 3 / E-507

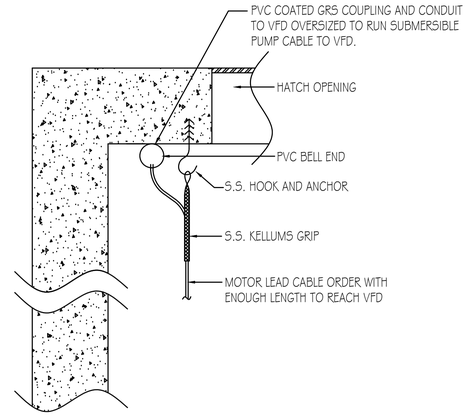


## PUMP MOTOR LEAD MOUNTING DETAIL

SCALE: NONE — 1 / E-507
(MOTOR MONITORING CABLE SIMILAR)

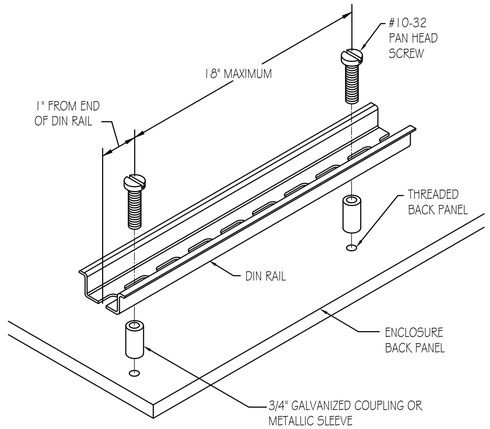


## DIN RAIL MOUNTING DETAIL

NO SCALE — 7 / E-507

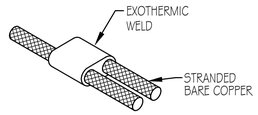


## GROUNDING GRID TIE-IN

SCALE: NONE
TYPICAL — 4 / E-507

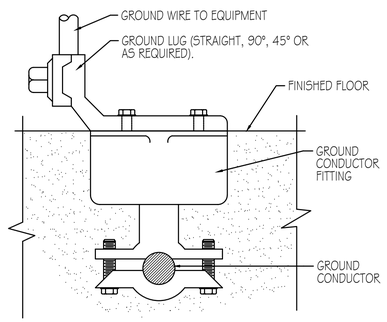


NOTE:
BOLTS SHALL BE INSERTED IN BOLT HOLES BEFORE CONNECTOR IS EMBEDDED.

## GROUND INSERT DETAIL

SCALE: NONE
TYPICAL OF ALL INTERIOR EQUIPMENT GROUNDING — 5 / E-507

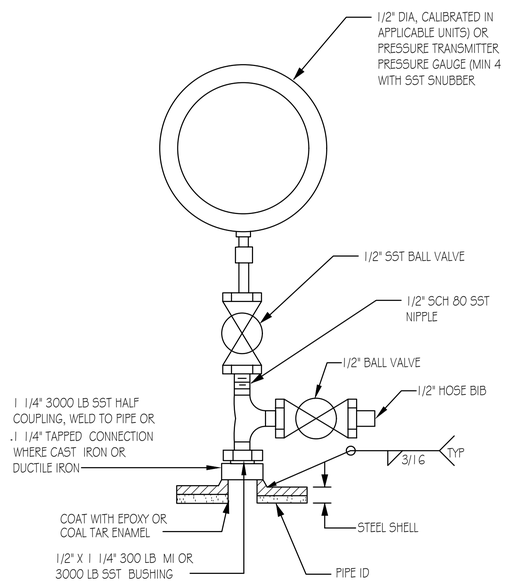


NOTE:
SEE SPECIFICATION SECTIONS 15183 AND 17100

## PRESSURE GAUGE OR PRESSURE SWITCH

SCALE: NONE — (CLEAN WATER ONLY) — 2 / E-507

PROFESSIONAL ENGINEER
# 11573207-2202
ROBERT J. HILLYER
04/19/2024
STATE OF UTAH

HANSEN ALLEN & LUCE inc ENGINEERS

HEATH Engineering Company

| | | | | | | |
|---|---|---|---|---|---|---|
| DESIGNED RJH | 3 | | | | | |
| DRAFTED KGM | 2 | | | | | |
| CHECKED RJH | 1 | | | | | |
| DATE MAY 26, 2022 | NO. | DATE | REVISIONS | | BY | APVD. |

SCALE

SOUTH SALT LAKE

DOWNTOWN SEWER IMPROVEMENTS AND PUMP STATION
ELECTRICAL
DETAILS

SHEET
E-507
126.42.300

I:\2008\801 - DWG\ELEC\SHEET\20058 - E-507.dwg, 4/19/2024 5:01:10 PM, Heath Engineering co\GJE

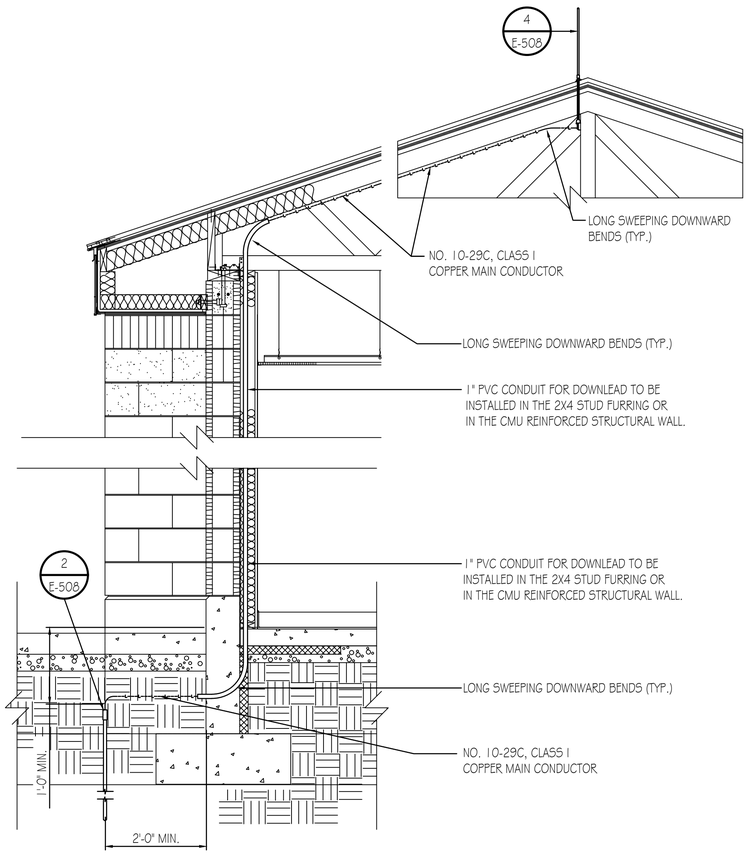


7 E-508 **TYPICAL DOWNLEAD DETAIL**
SCALE: NONE

NO. 40-22618BM, BI-METAL
THRU-ROOF/WALL CONNECTOR

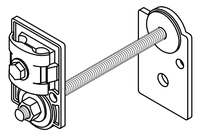

5 E-508 **THRU-ROOF/WALL CONNECTOR**
SCALE: NONE

NO. 40-206C, COPPER ONE
BOLT PARALLEL SPLICER

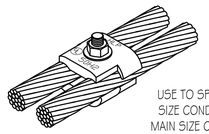

USE TO SPLICE MAIN
SIZE CONDUCTOR TO
MAIN SIZE CONDUCTOR

6 E-508 **CABLE CONNECTOR**
SCALE: NONE

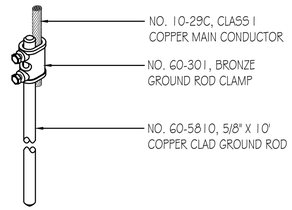


2 E-508 **GROUND ROD DETAIL**
SCALE: NONE

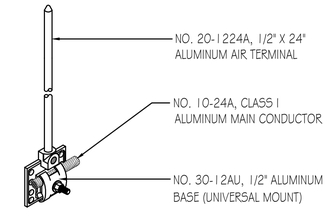


3 E-508 **STACK AIR TERMINAL**
SCALE: NONE

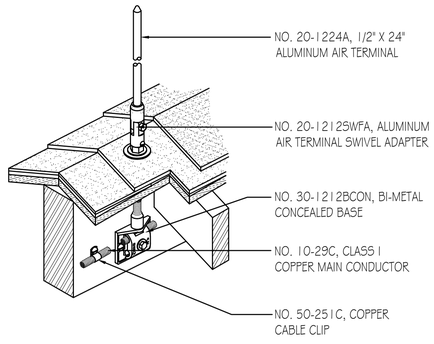


4 E-508 **RIDGE AIR TERMINAL**
SCALE: NONE

NO. 40-208C, COPPER
ONE BOLT PARALLEL SPLICER



USE TO SPLICE MAIN
SIZE CONDUCTOR TO
BONDING CONDUCTOR

NO. 40-216CT,
TIN PLATED BRONZE
BONDING LUG

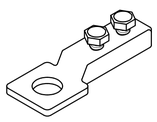

NO. 40-2316C, COPPER
STRAP TYPE PIPE CLAMP

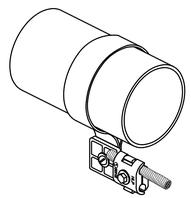

NO. 40-152C, COPPER
U-BOLT PIPE CLAMP
NO. 40-354C, COPPER
U-BOLT PIPE CLAMP

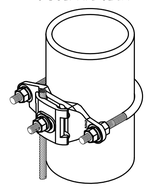

NO. 40-228G, GALVANIZED
ROOF FLASHING

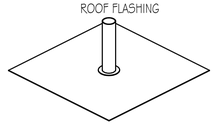

8 E-508 **MISCELLANEOUS DETAILS**
SCALE: NONE

# LEGEND

- AIR TERMINAL AND BASE ASSEMBLY
- MECHANICAL CONNECTION
- THRU-ROOF CONNECTION
- THRU-WALL CONNECTION
- COPPER LIGHTNING PROTECTION CONDUCTOR
- ALUMINUM LIGHTNING PROTECTION CONDUCTOR
- GROUND ROD
- MISCELLANEOUS BOND

# GENERAL CONSTRUCTION NOTES

1. THIS DRAWING IS INTENDED FOR USE AS A CONSTRUCTION DOCUMENT. FIELD VERIFY ACTUAL CONDITIONS PRIOR TO CONSTRUCTION. CONTACT ENGINEER TO CLARIFY ANY DISCREPANCIES.

# GENERAL BONDING NOTES

1. TYPICAL BODIES OF CONDUCTANCE AS NOTED BELOW. USE FULL SIZE CONDUCTOR AND APPROPRIATE FITTING SHOWN FOR CONNECTION.
2. BONDING CONNECTIONS AND FITTINGS SHOWN ARE TYPICAL EXAMPLES. MAKE ALL CONNECTIONS REQUIRED TO MEET CODES AS NOTED BELOW. ADJUST FITTING TYPE AS REQUIRED TO SUIT FIELD CONDITIONS.
3. TYPICAL BODIES OF INDUCTANCE AS NOTED BELOW. USE SECONDARY SIZE (SMALLER) CONDUCTOR AND APPROPRIATE FITTING SHOWN FOR CONNECTION.
4. (PLUMBING STACK) REQUIRES BONDING WITH MAIN SIZE CABLE ONLY IF WITHIN 6'-0" (1,828mm) OF LIGHTNING PROTECTION SYSTEM.

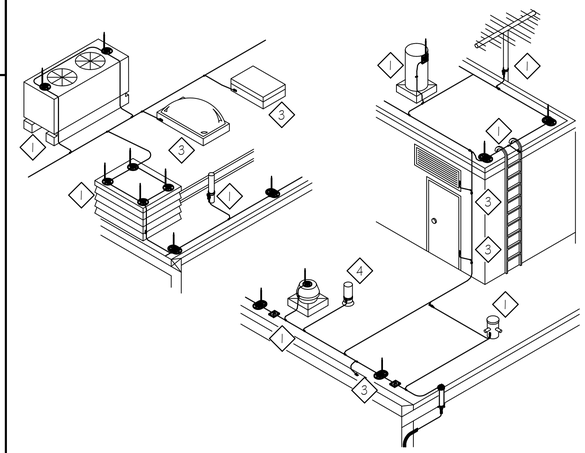


# GENERAL INSTALLATION NOTES

1. LOCATE AIR TERMINALS AS SHOWN. TAKE CARE TO INSURE THAT ALL POINTS ARE WITHIN 2'-0" (609mm) OF OUTSIDE BUILDING EDGE, OUTSIDE CORNERS, RIDGE ENDS, AND THAT MAX SPACING DOES NOT EXCEED 20'-0" (6,096mm), AND THAT MIN PROJECTION ABOVE OBJECT PROTECTED IS 10" (254mm); POINTS PROJECTING 24" (609mm) MAY BE SPACED @ 25'-0" (7,520mm) MAX.
2. MAINTAIN HORIZONTAL OR DOWNWARD COURSING OF MAIN CONDUCTOR. INSURE THAT ALL BENDS HAVE AT LEAST AN 8" (203mm) RADIUS AND DO NOT EXCEED 90 DEGREES.
3. ATTACH ALL EXPOSED ROOF, DOWN LEAD AND BONDING CABLES AT 3'-0" (914mm) ON CENTER MAX. VERIFY COMPATIBILITY OF ADHESIVE ON MEMBRANE ROOF APPLICATIONS PRIOR TO INSTALLATION.
4. GROUND ELECTRODES SHALL BE INSTALLED AS SHOWN, BUT IN NO INSTANCE SHALL THEY BE LESS THAN 1'-0" (304mm) BELOW GRADE AND 2'-0" (609mm) FROM FOUNDATION WALL. DRIVEN RODS SHALL PENETRATE THE EARTH AT LEAST 10'-0" (3,048mm).
5. BOND TO WATER SERVICE AND OTHER PIPING SYSTEMS AS SHOWN AND AS REQUIRED BY CODE.
6. INTERCONNECT LIGHTNING PROTECTION GROUND TO ELECTRIC, TELEPHONE, AND OTHER BUILDING GROUND SYSTEMS AS SHOWN OR AS REQUIRED BY CODE.
7. SYSTEM SHALL BE INSTALLED AS REQUIRED TO INSURE PROPER CODE COMPLIANCE AND SYSTEM CERTIFICATION. ANY MAJOR INSTALLATION VARIANCE SHALL BE RESUBMITTED FOR APPROVAL.
8. RECORD DOCUMENTS SHALL BE SUBMITTED IN ACCORDANCE WITH CERTIFICATION PROCEDURES.
9. ALL MATERIALS TO BE UNDERWRITER'S LABORATORIES APPROVED WITH "A" LABELS ON CONDUCTORS @ 10'-0" (3,048mm) INTERVALS AND "B" LABELS ON ALL AIR TERMINALS.
10. COMPLETED INSTALLATION SHALL BEAR U.L. MASTER LABEL "C" TO BE SECURED BY SYSTEM INSTALLER PER UL96A.
11. INSTALLATION SHALL BE MADE UNDER THE SUPERVISION OF AN L.P.I. CERTIFIED MASTER INSTALLER.

NO. 40-223C, BRONZE
FLANGE BONDING PLATE

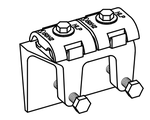

1 E-508 **STEEL CONNECTION**
SCALE: NONE

PROFESSIONAL ENGINEER
# 11573207-2202
ROBERT J.
HILLYER
09/11/2024
STATE OF UTAH

HANSEN ALLEN & LUCE inc ENGINEERS

HEATH Engineering Company

| | | | | | | |
|---|---|---|---|---|---|---|
| DESIGNED RJH | 3 | | · | | | SCALE · |
| DRAFTED KGM | 2 | | | | | |
| CHECKED RJH | 1 | | | | | |
| DATE MAY 26, 2022 | NO. | DATE | REVISIONS | BY | APVD. | |

SOUTH SALT LAKE

DOWNTOWN SEWER IMPROVEMENTS AND PUMP STATION
ELECTRICAL
DETAILS

SHEET
E-508
126.42.300

I:\2005801 - DWG\ELEC\SHEET\200S8 - E-508.dwg, 4/19/2024 5:01:15 PM, Heath Engineering co\GJE

# DRAWING NOTES

1. COMBINATION FUSED SWITCH (30 / 3 / FUSE PER NAMEPLATE / 3R / HD / 600) AND SIZE 00 MAGNETIC STARTER WITH H-O-A, SOLID STATE
2. DISCONNECT AT GRINDER VAULT. 30 / 3 / NF / 3R / 600 / HD.
3. DISCONNECT AT UNIT. 30 / 3 / FUSE PER NAME PLATE / 3R / 600 / HD.
4. DISCONNECT ON BUILDING EXTERIOR WALL IN SIGHT OF ODOR CONTROL UNIT OUT OF CLASSIFIED AREA. 30 / 3 / FUSE PER NAMEPLATE / 3R / 600 / HD.
5. CRANE HOIST DISCONNECT 60 / 3 / FUSE PER NAMEPLATE / 1 / 250 / HD WIRING FOR CRANE HOIST SHALL FOLLOW MANUFACTURER'S RECOMMENDATION.
6. DISCONNECT OUTDOORS OUTSIDE OF CLASSIFIED AREA NEAR ROLL UP DOOR. 30 / 3 / NF / 3R / 600 / HD

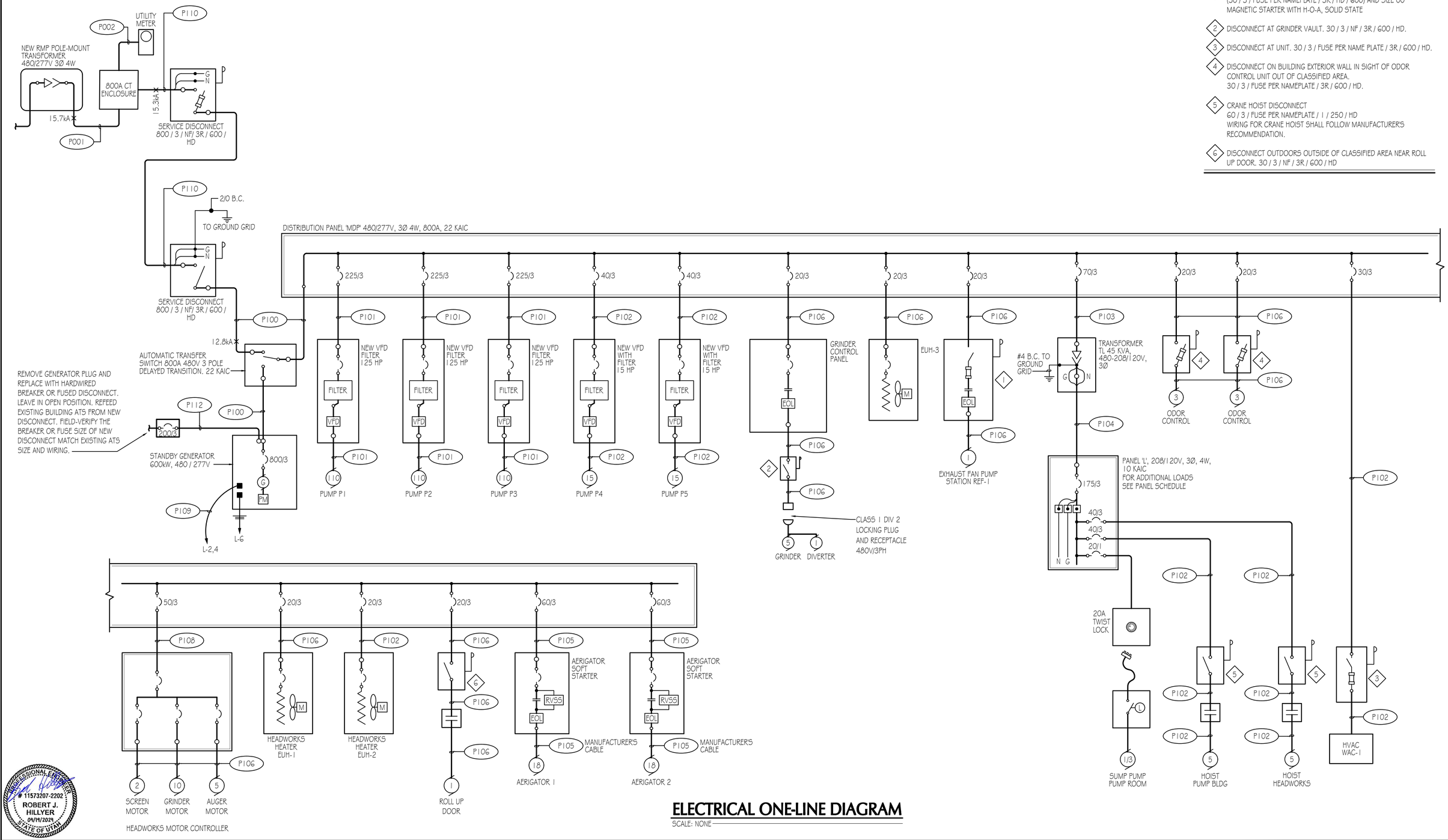


## ELECTRICAL ONE-LINE DIAGRAM

SCALE: NONE

PROFESSIONAL ENGINEER # 11573207-2202 ROBERT J. HILLYER 04/19/2024 STATE OF UTAH

| | | | | | | | |
|---|---|---|---|---|---|---|---|
| HANSEN ALLEN & LUCE inc ENGINEERS | HEATH Engineering Company | DESIGNED RJH | 3 | | | | SCALE |
| | | DRAFTED KGM | 2 | | | | |
| | | CHECKED RJH | 1 | | | | |
| | | DATE MAY 26, 2022 | NO. | DATE | REVISIONS | BY APVD. | |

SOUTH SALT LAKE

DOWNTOWN SEWER IMPROVEMENTS AND PUMP STATION
ELECTRICAL
ONE-LINE DIAGRAM

SHEET E-601

126.42.300

I:\2005801 - DWG\ELEC\SHEET\2005S - E-601.dwg, 4/19/2024 5:01:31 PM, Heath Engineering co/GJE

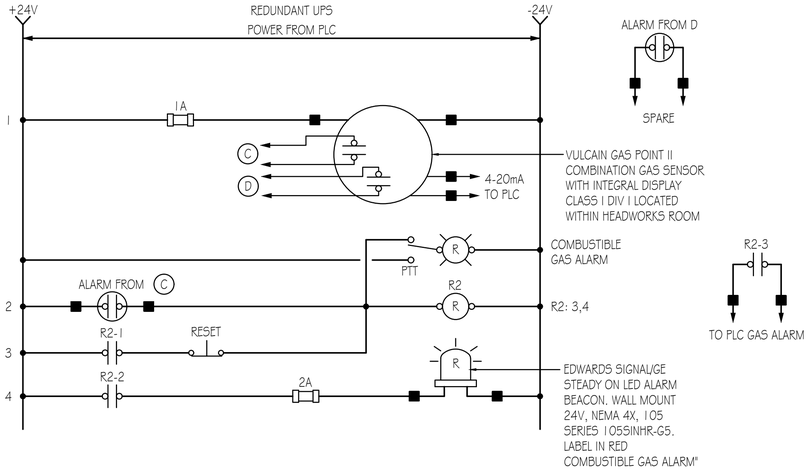


## HEADWORKS GAS ALARM PANEL CONTROL DIAGARM

SCALE: NONE

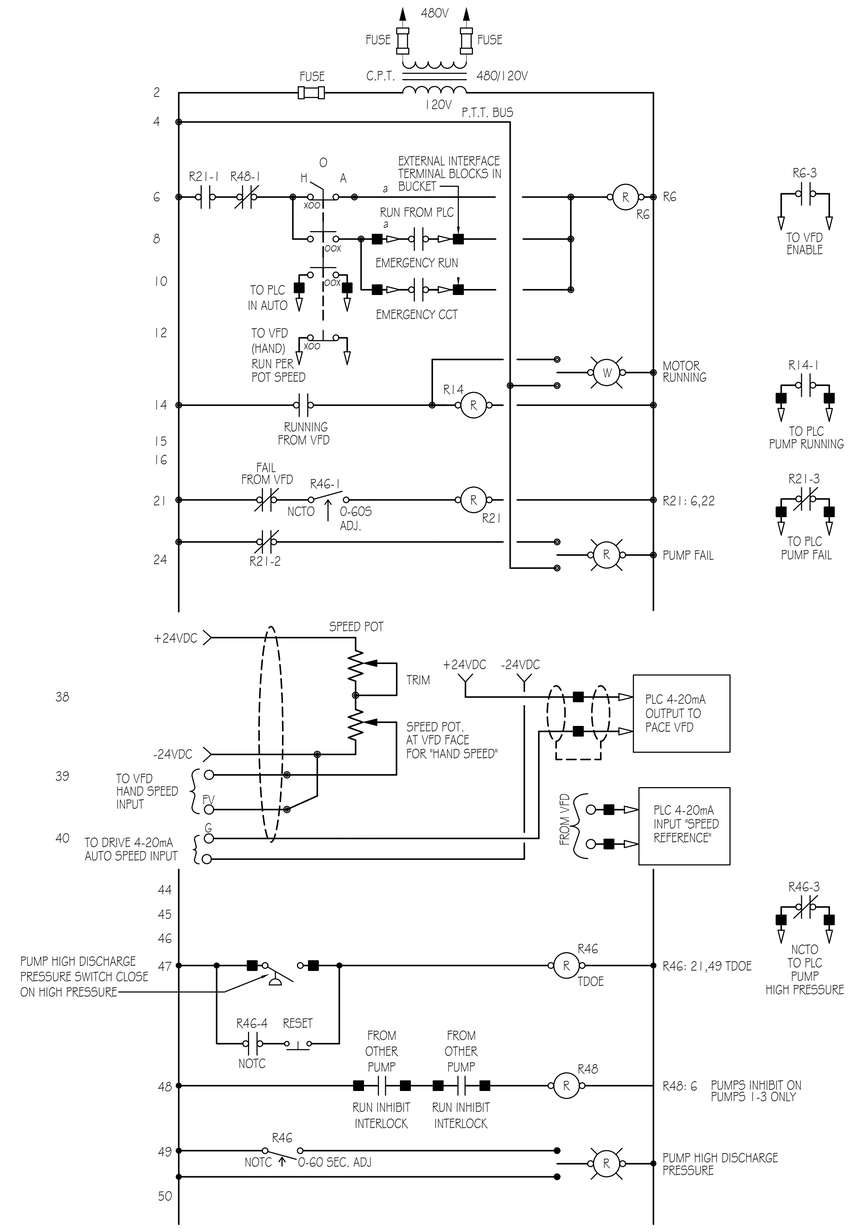


## PRIMARY SEWAGE PUMPS VFD WIRING DIAGRAM

SCALE: NONE — TYPICAL OF: 5 LIFT PUMPS

## GENERAL NOTES

1. PROVIDE AND SIZE OVER CURRENT DEVICES PER THE UTILIZATION EQUIPMENT MANUFACTURERS RECOMMENDATIONS.
2. DIAGRAMS ARE INTENDED TO REFLECT THE GENERAL CONTROL STRATEGY. ACTUAL CIRCUITRY WILL VARY FOR THE SPECIFIC EQUIPMENT SUPPLIED. THE NUMBER AND THE TYPE OF DEVICES SHALL BE FURNISHED AS REQUIRED FOR THE PROPER OPERATION OF THE EQUIPMENT.

PROFESSIONAL ENGINEER
# 11573207-2202
ROBERT J. HILLYER
04/19/2024
STATE OF UTAH

HANSEN ALLEN & LUCE inc ENGINEERS

HEATH Engineering Company

| | | | | | |
|---|---|---|---|---|---|
| DESIGNED RJH | 3 | | . | | |
| DRAFTED KGM | 2 | | | | |
| CHECKED RJH | 1 | | | | |
| DATE MAY 26, 2022 | NO. | DATE | REVISIONS | BY | APVD. |

SCALE: .

SOUTH SALT LAKE

DOWNTOWN SEWER IMPROVEMENTS AND PUMP STATION
ELECTRICAL
CONTROL DIAGRAMS

SHEET E-602

126.42.300

I:\2005801 - DWG\ELEC\SHEET\2005S - E-602.dwg, 4/19/2024 5:01:42 PM, Heath Engineering co/GJE

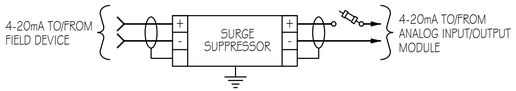


## TYPICAL ANALOG INPUT/OUTPUT DIAGRAM

SCALE: NONE

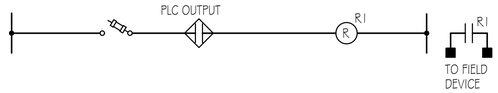


## TYPICAL DISCRETE OUTPUT DIAGRAM

SCALE: NONE

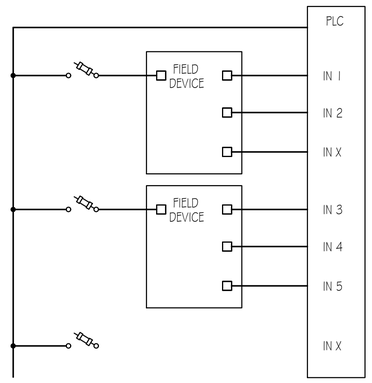


## TYPICAL DISCRETE INPUT DIAGRAM

SCALE: NONE

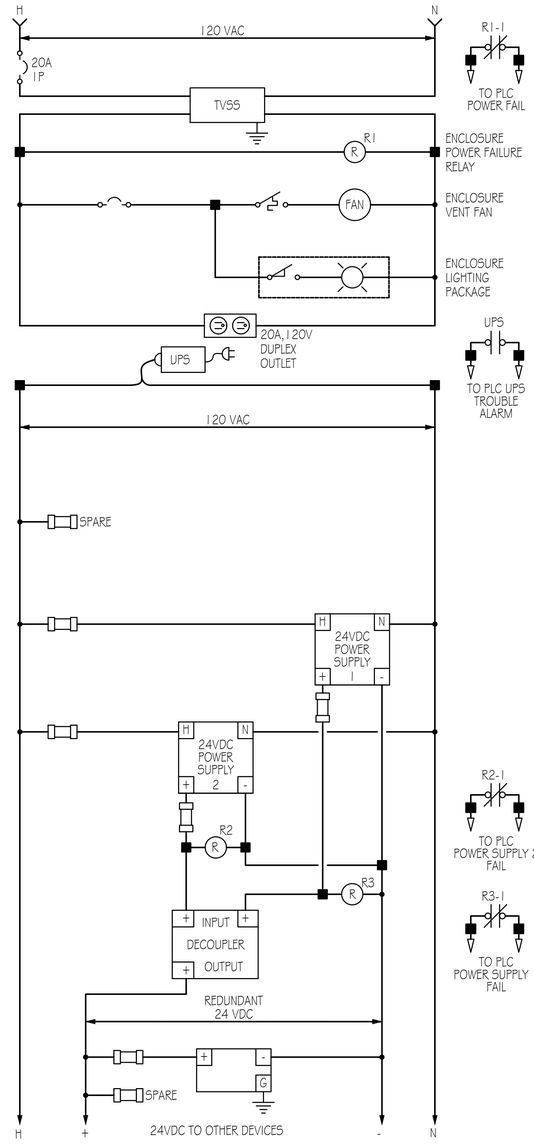


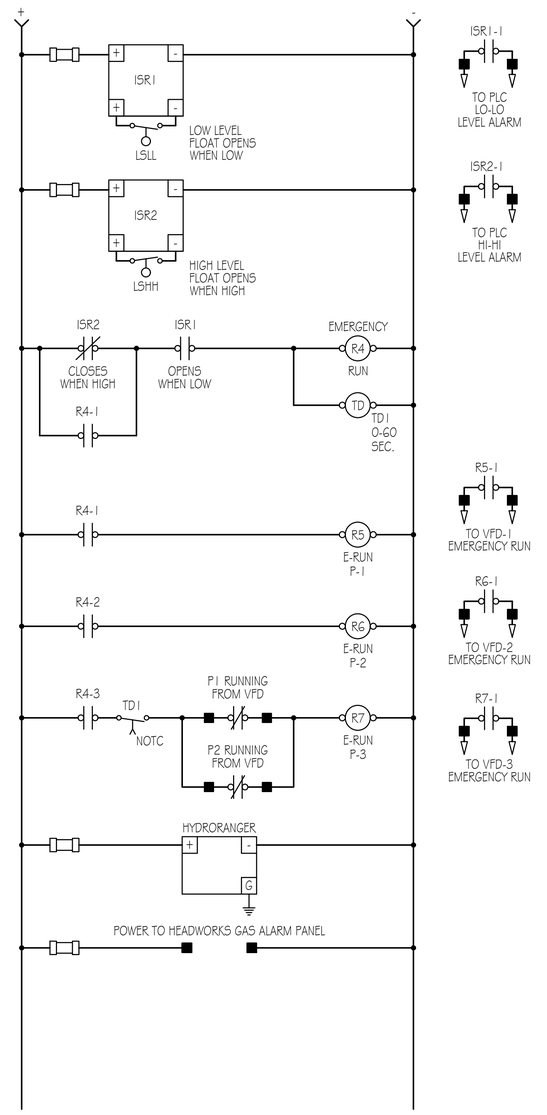


## GENERAL NOTES

1. PROVIDE AND SIZE OVER CURRENT DEVICES PER THE UTILIZATION EQUIPMENT MANUFACTURERS RECOMMENDATIONS.
2. DIAGRAMS ARE INTENDED TO REFLECT THE GENERAL WIRING STRATEGY. ACTUAL CIRCUITRY MAY VARY FOR THE SPECIFIC EQUIPMENT SUPPLIED. THE NUMBER AND THE TYPE OF DEVICES SHALL BE FURNISHED AS REQUIRED FOR THE PROPER OPERATION OF THE EQUIPMENT.
3. EACH DC POWER SUPPLY SHALL BE SIZED TO OPERATE AT 60% OF CAPACITY MAXIMUM WHILE CARRYING THE ENTIRE PLC/RTU ENCLOSURE DC LOAD.
4. ADJUST THE DC POWER SUPPLY VOLTAGES FOR REDUNDANT APPLICATION AS RECOMMENDED BY THE MANUFACTURER.
5. SEE SPECIFICATIONS FOR CONTROL NARRATIVE

## PLC/RTU ENCLOSURE POWER WIRING DIAGRAM

SCALE: NONE

PROFESSIONAL ENGINEER
# 11573207-2202
ROBERT J. HILLYER
04/19/2024
STATE OF UTAH

HANSEN ALLEN & LUCE inc ENGINEERS

HEATH Engineering Company

| | | | | | |
|---|---|---|---|---|---|
| DESIGNED RJH | 3 | | . | | |
| DRAFTED KGM | 2 | | | | |
| CHECKED RJH | 1 | | | | |
| DATE MAY 26, 2022 | NO. | DATE | REVISIONS | BY | APVD. |

SCALE .

SOUTH SALT LAKE

DOWNTOWN SEWER IMPROVEMENTS AND PUMP STATION
ELECTRICAL
CONTROL DIAGRAMS

SHEET E-603

126.42.300

T:\2065\501 - DWG\ELEC\SHEET\2065S - E-603.dwg, 4/19/2024 5:01:45 PM, Heath Engineering cowGJE

## PRIMARY ELEMENT SYMBOLS

- PARSHALL FLUME
- ORIFICE PLATE
- FLOW TUBE
- ROTAMETER
- ULTRASONIC FLOWMETER
- ELECTROMAGNETIC FLOWMETER
- PROPELLER METER
- LEVEL (BUBBLE TUBE)
- LEVEL (CONDUCTIVE)
- DM — DENSITY METER
- PRESSURE SENSING ANNULAR RING TYPE SEAL
- AE DO — DO SENSOR
- AE ORP — ORP SENSOR
- AE pH — pH SENSOR
- AIT DO — DO ANALYZER
- AIT ORP — ORP ANALYZER
- AIT pH — pH ANALYZER
- LS — FLOAT SWITCH
- HS HOA — HAND SWITCH
- PRESSURE SENSING DIAPHRAGM SEAL, DISK TYPE
- K BEACON — BEACON
- YL G STOP — INDICATING LIGHT
- FIT — INSERTION TYPE MASS FLOW METER
- FIT MASS — MASS FLOW METER ANNUBAR TYPE
- LE — ULTRASONIC OR RADAR LEVEL TRANSDUCER

## VALVE SYMBOLS

- GATE VALVE
- E — MOTOR OPERATED GATE VALVE
- K — KNIFE GATE VALVE
- BUTTERFLY VALVE
- E — MOTOR OPERATED BUTTERFLY VALVE
- GLOBE VALVE
- BALL VALVE
- V — VEE-BALL VALVE
- PLUG VALVE
- E — MOTOR OPERATED PLUG VALVE
- SEAT PORT ECCENTRIC PLUG VALVE
- E — MOTOR OPERATED ECCENTRIC PLUG VALVE
- DIAPHRAGM VALVE
- PINCH VALVE
- E — MOTOR OPERATED PINCH VALVE
- NEEDLE VALVE
- SWING CHECK VALVE
- S — SOLENOID VALVE
- DOUBLE LEAF CHECK VALVE
- RPBP — BACKFLOW PREVENTER (REDUCED PRESSURE ZONE TYPE)
- BALL CHECK VALVE
- MULTI-PORT VALVES (BALL VALVE SHOWN, FOR OTHER VALVE TYPES, APPROPRIATE VALVE SYMBOL SHOWN.) ARROWS INDICATE FLOW PATTERN. SEAT PORTS ARE IMPLIED BY INDICATED FLOW PATTERN.
- TELESCOPING VALVE
- S — SAMPLE TAP
- MUD VALVE
- PRESSURE RELIEF VALVE
- AIR AND/OR VACUUM RELEASE VALVE
- REGULATED SIDE PRESSURE CONTROL VALVE
- AIR RELEASE VALVE (ARV) OR COMBINATION AIR-VACUUM RELIEF VALVE (CAV)
- RUPTURE DISK
- E — MOTOR OPERATED SLEEVE VALVE
- SURGE ANTICIPATOR VALVE
- IPS CORP. STOP
- PVC DIFFUSER W/ IPS CORP. STOP

## MISCELLANEOUS MECHANICAL SYMBOLS

- M — FLOCCULATOR OR SUBMERSIBLE MIXER
- M — AERATOR
- M — MOTOR
- DIFFUSERS
- CL2 — CHLORINE TANK
- FILTER
- SILENCER
- INLET SILENCER AND FILTER

## P&ID LINE TYPES

- MAJOR PROCESS PIPING OR FLOW CHANNEL
- SECONDARY PROCESS PIPING
- MISCELLANEOUS PIPING
- EXISTING OR FUTURE MAJOR PROCESS PIPING OR FLOW CHANNEL
- EXISTING OR FUTURE SECONDARY PROCESS PIPING
- EXISTING OR FUTURE MISCELLANEOUS PIPING
- PROCESS LINES CROSSING (NOT CONNECTED)
- FLOW ARROW FOR PROCESS PIPING
- EXISTING PIPING OR EQUIPMENT OR FUTURE PIPING OR EQUIPMENT
- ? ? — PROCESS OR SIGNAL LINE GOING TO ANOTHER SHEET
- ? ? — PROCESS OR SIGNAL LINE FROM ANOTHER SHEET (MATCH LETTERS)
- -----L-----L----- HYDRAULIC SIGNAL
- // // PNEUMATIC SIGNAL
- ---------- DISCRETE SIGNAL
- ---------A--------- ANALOG SIGNAL
- ---------P--------- PULSE SIGNAL
- INTERNAL SYSTEM SIGNAL LINK (SOFTWARE OR DATA LINK)
- ELECTRICAL DIRECTION ARROW
- SIGNAL CONNECTION POINT
- PACKAGED SYSTEMS

## PUMP AND COMPRESSOR SYMBOLS

- XX — CENTRIFUGAL PUMP (DRY PIT)
- XX — CENTRIFUGAL WET PIT PUMP
- XX — PERISTALTIC CHEMICAL FEED PUMP
- XX — DIAPHRAGM PUMP
- XX — GEAR PUMP OR BLOWER (POSITIVE DISPLACEMENT)
- XX — METERING PUMP WITH MANUAL STROKE CONTROL
- XX — PROGRESSIVE CAVITY PUMP
- XX — AIR OPERATED DOUBLE DIAPHRAGM PUMP
- XX — PISTON PUMP
- XX — GEAR PUMP OR BLOWER
- XX — PROGRESSING CAVITY PUMP
- XX — COMPRESSOR (CENTRIFUGAL)
- XX — COMPRESSOR (PISTON)
- XX — ROTARY LOBE PUMP
- XX — BLOWER OR FAN (CENTRIFUGAL)
- XX — VERTICAL TURBINE PUMP

NOTE: XX:AS ADJUSTABLE SPEED
CS-1 CONSTANT SPEED (SINGLE SPEED)
CS-2 CONSTANT SPEED (TWO SPEED)

## PROCESS DEVICE SYMBOLS

- SIGHT GLASS
- PRESSURE REGULATOR
- DIAPHRAGM
- CARTRIDGE FILTER
- AIR FILTER
- DIAPHRAGM WITH POSITIONER
- STRAINER
- PULSATION DAMPENER
- CL2 FLOW METER
- DRAIN
- WATER LEVEL
- SAMPLER
- CAP OR PLUG
- QUICK DISC. COUPLING
- EJECTOR
- BLIND FLANGE
- EXPANSION JOINT
- WEIGHT SCALE

## GATE SYMBOLS

- SLIDE GATE
- BUTTERFLY GATE
- SLUICE GATE
- FLAP GATE
- STOP GATE
- WEIR GATE (DOWNWARD OPENING)

## ACTUATOR SYMBOLS

- P — PNEUMATIC
- E — ELECTRIC WITH POSITIONER
- S — SOLENOID
- P E — PNEUMATIC WITH POSITIONER
- E — ELECTRIC
- H — HYDRAULIC

NOTE: ON LOSS OF PRIMARY POWER (PNEUMATIC OR ELECTRICAL)
XX — FO = FAIL OPEN; FC = FAIL CLOSED; FLP = FAIL LAST POSITION

## MISCELLANEOUS ELECTRICAL SYMBOLS

- 120/1 — VOLTAGE & POWER SUPPLY PHASE(S) AS NOTED
- ISR — INTRINSICALLY SAFE RELAY
- PLUG
- E E — CONVERTER
- S — SMOKE DETECTOR
- DIESEL GENERATOR

PROFESSIONAL ENGINEER # 11573207-2202 ROBERT J. HILLYER 04/19/2024 STATE OF UTAH

HANSEN ALLEN & LUCE inc ENGINEERS

HEATH Engineering Company

| | | | | | |
|---|---|---|---|---|---|
| DESIGNED RJH | 3 | | | | |
| DRAFTED KGM | 2 | | | | |
| CHECKED RJH | 1 | | | | |
| DATE MAY 26, 2022 | NO. | DATE | REVISIONS | BY | APVD. |

SCALE .

SOUTH SALT LAKE

DOWNTOWN SEWER IMPROVEMENTS AND PUMP STATION
ELECTRICAL
P & ID SYMBOL LEGEND

SHEET I-01

126.42.300

I:\2305801 - DWG\ELEC\SHEET\20058 - I-01.dwg, 4/19/2024 5:02:15 PM, Heath Engineering co\GJE

## ISA INSTRUMENT IDENTIFICATION TABLE

| | FIRST LETTERS | | SUCCEEDING LETTERS | | |
|---|---|---|---|---|---|
| | MEASURED OR INITIATING VARIABLE | MODIFIER | READOUT OR PASSIVE FUNCTION | OUTPUT FUNCTION | MODIFIER |
| A | ANALYZER | | ALARM | | AUTO |
| B | BURNER, COMBUSTION | | | | |
| C | CONDUCTIVITY | | | CONTROL | CLOSED |
| D | DENSITY | DIFFERENTIAL | | | |
| E | VOLTAGE | | ELEMENT | | |
| F | FLOW | RATIO | | | |
| G | GAUGE | | GLASS, VIEWING DEVICE | | |
| H | HAND | | | | HIGH |
| I | CURRENT | | INDICATE | | |
| J | POWER | SCAN | | | |
| K | TIME OR TIME SCHEDULE | TIME RATE OF CHANGE | | CONTROL STATION | |
| L | LEVEL | | LIGHT | | LOW |
| M | MOTION OR MOISTURE | | | | MIDDLE |
| N | INTRUSION | | | | NORMAL |
| O | TORQUE | | ORIFICE, RESTRICTION | | OPEN |
| P | PRESSURE | | POINT CONNECTION | | STOP |
| Q | QUANTITY | INTEGRATE, TOTALIZE | | | |
| R | RADIATION | | RECORD OR PRINT | RESET | RUN OR REMOTE |
| S | SPEED OR FREQUENCY | SAFETY | | SWITCH | START |
| T | TEMPERATURE | | | TRANSMIT | |
| U | MULTIVARIABLE | | MULTIFUNCTION | MULTIFUNCTION | MULTIFUNCTION |
| V | VIBRATION | | | VALVE, LOUVER | |
| W | WEIGHT OR FORCE | | WELL | | |
| X | MOTOR | X–AXIS | UNCLASSIFIED | UNCLASSIFIED | UNCLASSIFIED |
| Y | EVENT, STATE, OR PRESENCE | Y–AXIS | | RELAY, COMPUTE, CONVERT | |
| Z | POSITION | Z–AXIS | | DRIVER, ACTUATOR, FINAL CONTROL ELEMENT | |

## P&ID INTERFACE SYMBOLS

NOTE:
REFER TO ISA INSTRUMENT IDENTIFICATION TABLE FOR DEFINITION OF LETTERS BBB INSIDE THE BUBBLES. CCC REPRESENTS LOOP ID (IF USED). SEE ABBREVIATIONS LIST FOR SUPERSCRIPT AAA.

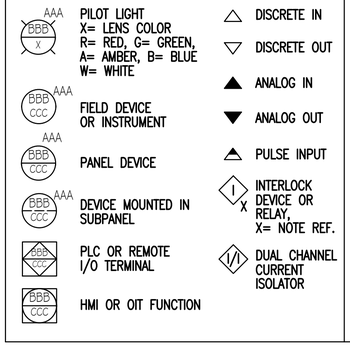


## TAG NUMBERS AND ADDITIONAL DESIGNATIONS

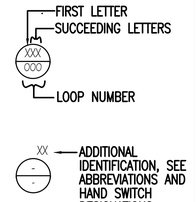


## ABBREVIATIONS

| | |
|---|---|
| A | AMPERE OR AIR |
| AC | ALTERNATING CURRENT |
| AFD | ADJUSTABLE FREQUENCY DRIVE |
| AI | ANALOG INPUT |
| AIC | AMPS INTERRUPTING CAPACITY |
| AM | AUTO–MANUAL |
| ARV | AIR RELIEF VALVE |
| AO | ANALOG OUTPUT |
| AS | AIR SUPPLY |
| ATS | AUTOMATIC TRANSFER SWITCH |
| AUTO | AUTOMATIC |
| BFP | BELT FILTER PRESS |
| BR | BRINE SOLUTION |
| BW | BACKWASH |
| BWL | BOTTOM WATER LEVEL |
| CB | CIRCUIT BREAKER |
| CD | CYCLONE DRAIN |
| CL2 | CHLORINE (TYPICAL: USE STANDARD CHEMICAL ELEMENT ABBREVIATION) |
| CNDT | CONDUCTIVITY |
| CP–X | CONTROL PANEL NO. X |
| CPM | CUSTOMER POWER MONITORING UNIT |
| CON | CONTACTOR |
| CSI | CYCLONE SEPARATOR INFLUENT |
| CU | COPPER, BARE |
| CV | CONTROL VALVE |
| CW | CYCLONE WASTE |
| DC | DIRECT CURRENT |
| DCS | DISTRIBUTED CONTROL SYSTEM |
| DI | DISCRETE INPUT |
| DO | DISCRETE OUTPUT OR DISSOLVED OXYGEN |
| DP | DIFFERENTIAL PRESSURE |
| DSW | DRUM SCREEN WASTE |
| DWG | DRAWING |
| E | VOLTAGE |
| ETM | ELAPSED TIME METER |
| ETMf | ELAPSED TIME METER (FAST SPEED) |
| ETMs | ELAPSED TIME METER (SLOW SPEED) |
| EOL | ELECTRONIC OVERLOAD |
| ES | EMERGENCY STOP |
| EXIST, (E) | EXISTING |
| FA | FOUL AIR |
| FC | FAIL CLOSED |
| FE | FINAL EFFLUENT |
| FLT | FILTER |
| FMR | FEEDER MANAGEMENT RELAY |
| FR | FORWARD–REVERSE |
| FVNR | FULL VOLTAGE NON–REVERSING |
| FW | FINISHED WATER |
| GAL | GALLONS |
| GCP | GENERATOR CONTROL PANEL |
| GND | GROUND |
| GPD | GALLONS PER DAY |
| GPH | GALLONS PER HOUR |
| GPM | GALLONS PER MINUTE |
| H, HI | HIGH |
| H2S | HYDROGEN SULFIDE |
| HMI | HUMAN MACHINE INTERFACE |
| I | CURRENT |
| ICR | INTERMITTENT CYCLE |
| IO | REACTOR INPUT/OUTPUT |
| IOE | INTERNAL – OFF – EXTERNAL |
| IS | INTERCHANGE SLUDGE |
| JB | JUNCTION BOX |
| L, LO | LOW |
| LAN | LOCAL AREA NETWORK |
| LC | LOOP CONTROLLER |
| LCP | LOCAL CONTROL PANEL |
| LEL | LOWER EXPLOSIVE LIMIT |
| M | MOTOR |
| MA | MANUAL/AUTO, MILLIAMPS |
| MC | MANUFACTURER CABLE |
| MCC | MOTOR CONTROL CENTER |
| MCP | MOTOR CIRCUIT PROTECTOR MAIN CONTROL INSTRUMENT PANEL |
| MFR(S) | MANUFACTURER(S) |
| MGD | MILLION GALLONS PER DAY |
| MGL | MILLIGRAMS PER LITER |
| MH | MANHOLE |
| ML | MIXED LIQUOR |
| MLR | MIXED LIQUOR RECYCLE |
| MLSS | MIXED LIQUOR SUSPENDED SOLIDS |
| MO | MOISTURE |
| MOD | MODULATED |
| MOG | MOTOR OPERATED GATE |
| MS | MOISTURE SWITCH |
| MTU | MASTER TELEMETRY UNIT |
| NADH | NICOTINAMIDE ADENINE DINUCLEOTIDE |
| NIA | NOT IN AUTO |
| NPW | NON–POTABLE WATER |
| NS | NITROGEN SUPPLY |
| NTU | TURBIDITY |
| OC | OPEN/CLOSE |
| OIT | OPERATOR INTERFACE TERMINAL |
| OL | OVERLOAD |
| ORP | OXYGEN REDUCTION POTENTIAL |
| OTA | OVER TORQUE ALARM |
| OTW | OVER TORQUE WARNING |
| P | PRESSURE |
| PD | PLANT DRAIN |
| PER | PERMISSIVE |
| PLC | PROGRAMMABLE LOGIC CONTROLLER |
| PNL | PANEL |
| PO | PULSE OUTPUT |
| POS | POSITION |
| POT | POTENTIOMETER |
| PPH | POUNDS PER HOUR |
| PPM | PARTS PER MILLION |
| PR | PAIR |
| PRES | PRESSURE |
| PRV | PRESSURE REDUCING VALVE |
| PSI | POUNDS PER SQUARE INCH |
| PV | PROCESS VARIABLE |
| PWR | POWER |
| RAS | RETURN ACTIVATED SLUDGE |
| RAW | RAW WATER |
| REM | REMOTE |
| RF | RADIO FREQUENCY |
| RIO | REMOTE INPUT/OUTPUT |
| RS | RAW SEWAGE, RUNNING STATUS |
| RSP | RAW SEWAGE PUMP |
| RST | RESET |
| RTU | REMOTE TELEMETRY UNIT |
| RUNf | RUN (FAST SPEED) |
| RUNs | RUN (SLOW SPEED) |
| SB | SLUDGE BLANKET |
| SCC | SCUM SECONDARY CLARIFIER |
| SE | SECONDARY EFFLUENT |
| SEQ | SERVICE ENTRANCE EQUIPMENT |
| SES | SERVICE ENTRANCE SECTION |
| SHC | SODIUM HYPOCHLORITE |
| SLC | SINGLE LOOP CONTROLLER |
| SLG | SLUICE GATE |
| SO2 | SULFUR DIOXIDE |
| SOV | SOLENOID OPERATED VALVE |
| SP | SET POINT |
| SPC | SET POINT CONTROLLER |
| SPD | SPEED |
| SPR | SPARE |
| SSS | SOLID STATE STARTER (SOFT START) |
| T/M | TEMPERATURE AND/OR MOISTURE |
| TEMP | TEMPERATURE |
| TSS | TOTAL SUSPENDED SOLIDS |
| TWL | TOP WATER LEVEL |
| Tu | TURBIDITY |
| UG | UNDERGROUND |
| UW | UTILITY WATER |
| V | VOLT |
| V* | VENDOR EQUIPMENT |
| VCP | VENDOR CONTROL PANEL |
| VFD | VARIABLE FREQUENCY DRIVE |
| VTP | VERTICAL TURBINE PUMP |
| VIB | VIBRATION |
| W | WATT, WIRE |
| WAS | WASTE ACTIVATED SLUDGE |
| WS | WASTE SLUDGE |

## HAND SWITCH DESIGNATIONS

| | |
|---|---|
| ES | EMERGENCY STOP |
| HOA | HAND – OFF – AUTO |
| HOR | HAND – OFF – REMOTE |
| HORA | HAND – OFF – REMOTE – AUTO |
| JOA | JOG – OFF – AUTO |
| JR | JOG REVERSE |
| LOAR | LOWER – OFF – AUTO – RAISE |
| LOR | LOCAL – OFF – REMOTE |
| LOS | LOCKOUT STOP |
| LR | LOCAL – REMOTE |
| OC | OPEN – CLOSE |
| OCA | OPEN – CLOSE – AUTO |
| OO | ON – OFF |
| OOA | ON – OFF – AUTO |
| OSC | OPEN – STOP – CLOSE |
| SS | START/STOP (MAINTAINED) |
| USD | UP/STOP/DOWN |

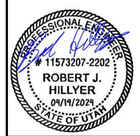


HANSEN ALLEN & LUCE, Inc. ENGINEERS

HEATH Engineering Company

| | | | | | |
|---|---|---|---|---|---|
| DESIGNED | RJH | 3 | | | |
| DRAFTED | KGM | 2 | | | |
| CHECKED | RJH | 1 | | | |
| DATE | MAY 26, 2022 | NO. | DATE | REVISIONS | BY / APVD. |

SCALE

SOUTH SALT LAKE

DOWNTOWN SEWER IMPROVEMENTS AND PUMP STATION
ELECTRICAL
P & ID SYMBOL LEGEND

SHEET
I–02

126.42.300

I:\20085801 - DWG\ELEC\SHEET\20058 - I-02.dwg, 4/19/2024 5:02:18 PM, Heath Engineering co\GJE

## DRAWING NOTES

1. ACCESS HATCH ABOVE
2. TO FLOW METER
3. TO PLC
4. PRESSURE SWITCH SHUTDOWN
5. TO CORRESPONDING VFD.
6. FLOOD SWITCH
7. SUMP PUMP WITH INTEGRAL FLOAT SWITCH
8. LEVEL TRANSMITTER COMPATIBLE WITH SCREEN MANUFACTURER. SEE SECTION.
9. TO HEADWORKS MOTOR CONTROL PANEL IN PUMP BUILDING VIA CLASSIFIED TRANSITION.
10. GAS DETECTOR. SEE SECTION.
11. TO GAS ALARM PANEL VIA CLASSIFIED TRANSITION
12. FLOOD FLOAT SWITCH
13. GRINDER TEMPERATURE SWITCH
14. TO GRINDER CONTROL PANEL VIA CLASSIFIED TRANSITION

## GENERAL NOTES

A. ALL CONDUIT CHANGING CLASSIFIED ZONES REQUIRE A CLASSIFIED TRANSITION. CLASSIFIED TRANSITIONS MAY BE SHARED BY SIGNALS/POWER OF THE SAME TYPE GOING TO THE SAME DESTINATION.

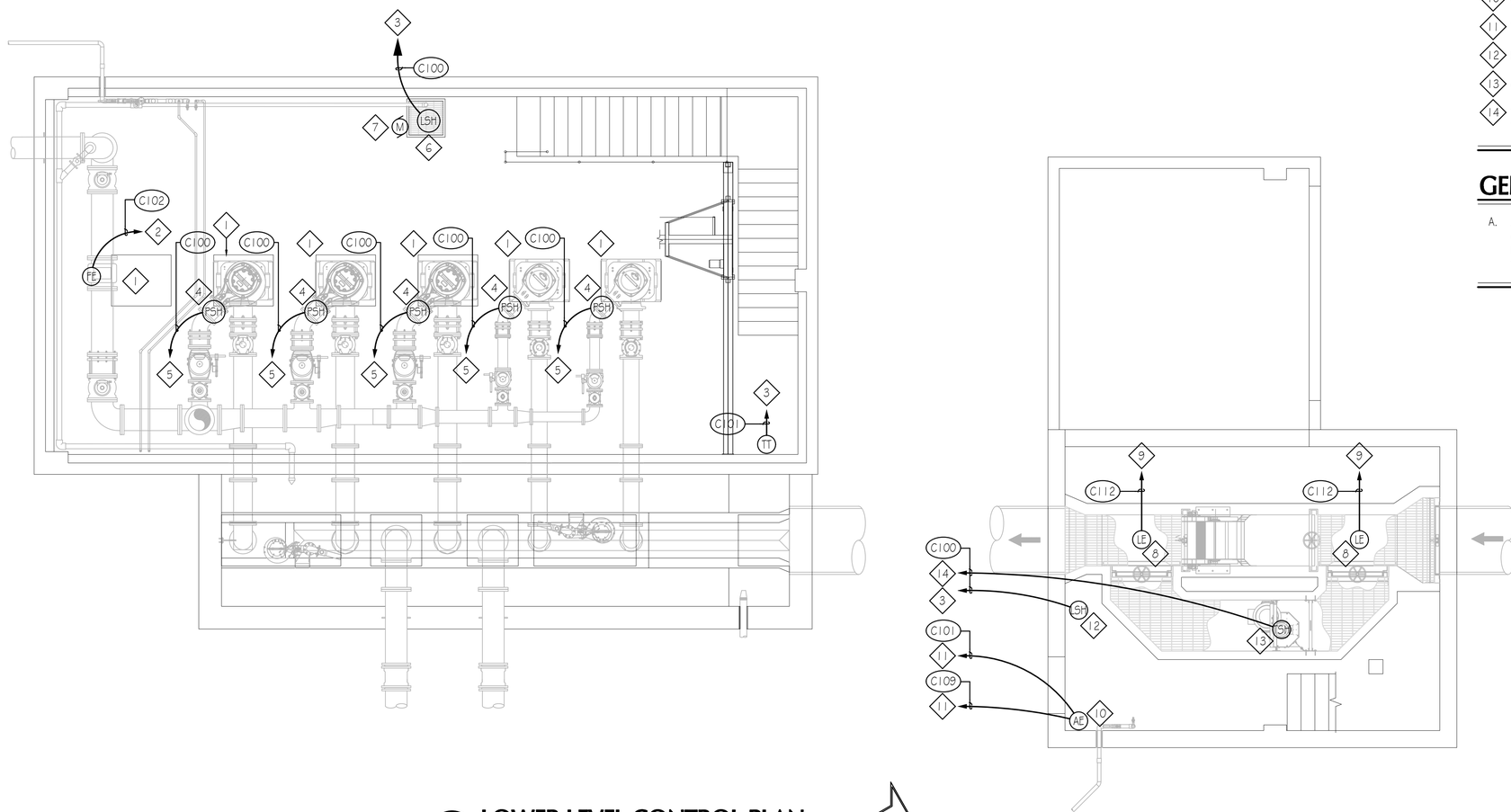


1 / I-100 LOWER LEVEL CONTROL PLAN
SCALE: 1/4"=1'-0"
5 0 10

PROFESSIONAL ENGINEER
# 11573207-2202
ROBERT J. HILLYER
04/19/2024
STATE OF UTAH

| | | | | | | | | |
|---|---|---|---|---|---|---|---|---|
| HANSEN ALLEN & LUCE inc ENGINEERS | HEATH Engineering Company | DESIGNED RJH | 3 | | | | | SCALE |
| | | DRAFTED KGM | 2 | | | | | |
| | | CHECKED RJH | 1 | | | | | |
| | | DATE MAY 26, 2022 | NO. | DATE | REVISIONS | BY | APVD. | |

SOUTH SALT LAKE

DOWNTOWN SEWER IMPROVEMENTS AND PUMP STATION
ELECTRICAL
DRY PIT CONTROL PLAN

SHEET I-100
126.42.300

I:\20058\01 - DWG\ELEC\SHEET\20058 - I-100.dwg, 4/19/2024 5:02:21 PM, Heath Engineering co\GIE

## GENERAL NOTES

A. ALL CONDUIT CHANGING CLASSIFIED ZONES REQUIRE A CLASSIFIED TRANSITION. CLASSIFIED TRANSITIONS MAY BE SHARED BY SIGNALS/POWER OF THE SAME TYPE GOING TO THE SAME DESTINATION.

B. PROVIDE (1) SPARE 1" CONDUIT BETWEEN EVERY ELECTRICAL DEVICE THAT HAS A CONTROL CONDUIT TO THE PLC. PROVIDE (2) SPARE 2" CONDUIT FROM THE GRINDER CONTROLLER TO SCREEN ROOM FOR ANY GRINDER SIGNALS THAT MAY BE REQUIRED.

## DRAWING NOTES

25 PROVIDE PLC 120V POWER FROM NEW PLC CABINET TO SECONDARY INPUT OF DUAL INPUT UPS FOR PLC CABINET IN EXISTING BUILDING TO ENSURE EXISTING PLC HAS POWER ON GENERATOR CIRCUIT. MARK ON EXISTING PLC CABINET "CAUTION! THIS CABINET FED FROM MULTIPLE POWER SOURCES"

26 MODUBS 485 SIGNAL FOR FLOW TOTALIZER AND COMMUNICATIONS.

1 AUTOMATIC TRANSFER SWITCH.
2 MAIN DISTRIBUTION PANEL 'MDP'.
3 VFD
4 NOT USED
5 TO PLC
6 EQUIPMENT ACCESS HATCH.
7 LEVEL METER
8 FLOW METER
9 HEADWORKS SCREEN CONTROL PANEL
10 AERIGATOR
11 AERIGATOR SOFT START. RUN WITH ON / OFF TIMER FROM PLC WITH OPERATOR-SETTABLE TIMER.
12 CLASSIFIED TRANSITION. SEE DETAIL 9 / E-502.
13 MANUFACTURER'S CABLE INCLUDES TEMPERATURE SWITCH SHUTDOWN WIRING.
14 TO HEADWORKS MOTOR CONTROL PANEL IN PUMP BUILDING VIA CLASSIFIED TRANSITION. COMBINE DIGITAL CONTROLS FOR COMMON HOME RUN TO CONTROL PANEL.
15 WASHING PRESS CONSOLE
16 PLC CABINET BY IGOR KOVALENKO SUBCONTRACTED BY GENERAL CONTRACTOR. CABINET, PROGRAMMING, SCADA INTEGRATION BY IGOR. CABINET INSTALLATION AND FIELD WIRING BY ELECTRICAL CONTRACTOR.
17 HEADWORKS VENT FAN CONTROLLER
18 GAS ALARM PANEL
19 TO GAS ALARM PANEL VIA CLASSIFIED TRANSITION
20 GRINDER CONTROL PANEL
21 SEE ALSO POWER PLAN FOR WIRING INSTRUCTIONS.
22 NOT USED
23 TANK LEVEL
24 1-1/4" CONDUIT WITH #14 CONTROL WIRE PAIRS. COORDINATE WITH MANUFACTURER FOR THE FOLLOWING:
-HOPPER SPRAYWASH SOLENOID
-WMP AUGER SPRAYWASH SOLENOID
-SCREEN OVERTORQUE
-SCREEN MOTOR OVERTEMP
-GRINDER MOTOR OVERTEMP
-AUGER MOTOR OVERTEMP
-(2) LOCAL E-STOP
-SCREEN HAND
-SCREEN AUTO
-SCREEN FWD/REV
-GRINDER HAND
-GRINDER AUTO
-GRINDER FWD/REV
-AUGER HAND
-AUGER AUTO
-AUGER FWD/REV
-(3) SPARE PAIRS

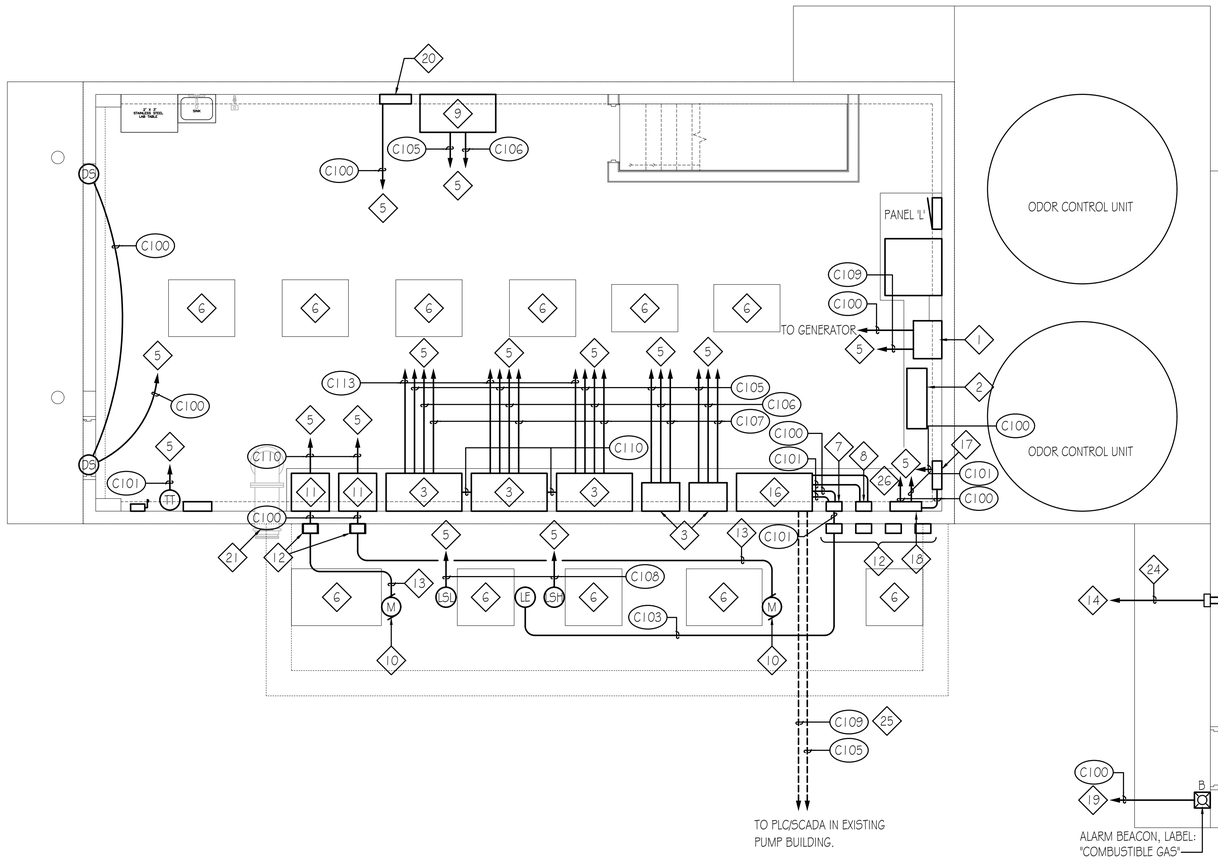


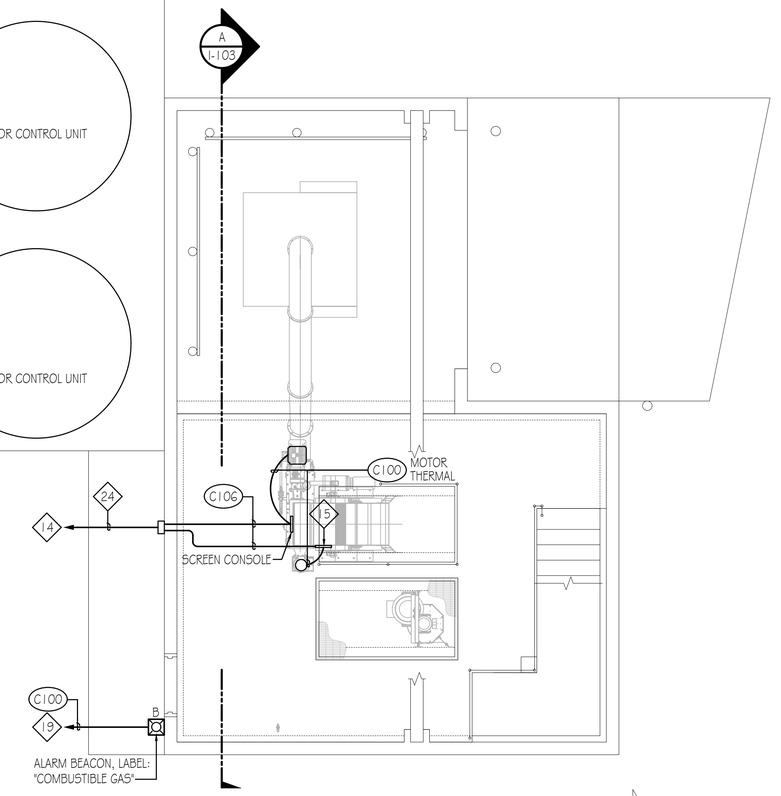


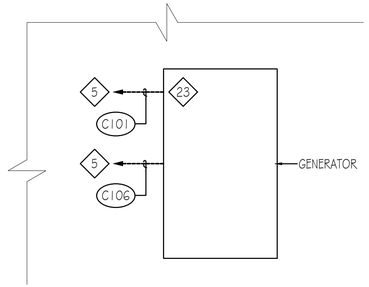


1 I-101 MAIN LEVEL CONTROL PLAN
SCALE: 1/4"= 1'-0"

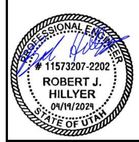


HANSEN ALLEN & LUCE inc ENGINEERS

HEATH Engineering Company

| | | | | | |
|---|---|---|---|---|---|
| DESIGNED RJH | 3 | | | | |
| DRAFTED KGM | 2 | | | | |
| CHECKED RJH | 1 | | | | |
| DATE MAY 26, 2022 | NO. | DATE | REVISIONS | BY | APVD. |

SCALE .

SOUTH SALT LAKE

DOWNTOWN SEWER IMPROVEMENTS AND PUMP STATION
ELECTRICAL
TOP FLOOR CONTROL PLAN

SHEET I-101

126.42.300

I:\2005901 - DWG\ELEC\SHEET\20058 - I-101.dwg, 4/19/2024 5:02:25 PM, Heath Engineering cw:GJE

## DRAWING NOTES

1. LEVEL TRANSDUCERS
2. TO SCREEN CONTROL
3. TO COMBUSTIBLE GAS ALARM PANEL
4. COMBUSTIBLE GAS DETECTOR
5. TO HEADWORKS CONTROL PANEL VIA CLASSIFIED TRANSITION COMBINED WITH OTHER DIGITAL SIGNALS.
6. FLOOD FLOAT SWITCH
7. GRINDER TEMPERATURE SWITCH

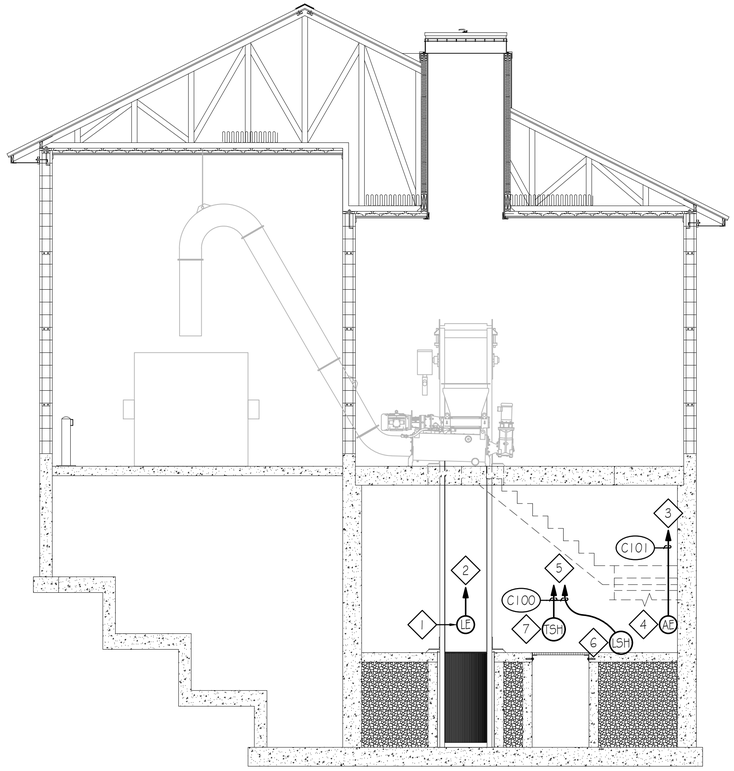


A
I-301
## ELECTRICAL SECTION
SCALE: 1/4"=1'-0"

5 0 10

PROFESSIONAL ENGINEER
# 11573207-2202
ROBERT J. HILLYER
04/19/2024
STATE OF UTAH

HANSEN ALLEN & LUCE inc ENGINEERS

HEATH Engineering Company

| | | | | | | |
|---|---|---|---|---|---|---|
| DESIGNED RJH | 3 | | · | | | SCALE · |
| DRAFTED KGM | 2 | | | | | |
| CHECKED RJH | 1 | | | | | |
| DATE MAY 26, 2022 | NO. | DATE | REVISIONS | BY | APVD. | |

SOUTH SALT LAKE

DOWNTOWN SEWER IMPROVEMENTS AND PUMP STATION
ELECTRICAL
ELECTRICAL CONTROL SECTION

SHEET
I-301
126.42.300

I:\2005801 - DWG\ELEC\SHEET\2005S - I-301.dwg, 4/19/2024 5:02:28 PM, Heath Engineering cox\GJE

## GENERAL NOTES

A. SEE SPECIFICATIONS FOR CONTROL NARRATIVE

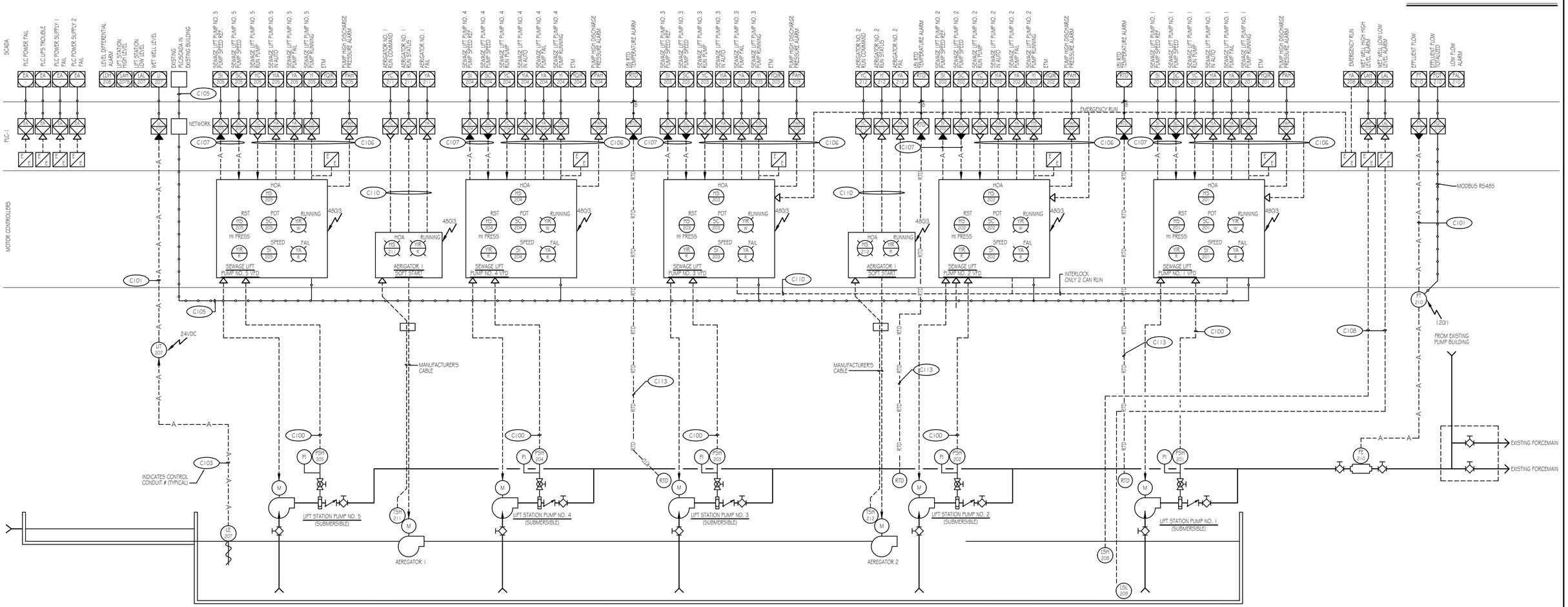


PROFESSIONAL ENGINEER
# 11573207-2202
ROBERT J. HILLYER
04/19/2024
STATE OF UTAH

| | | | | | | | |
|---|---|---|---|---|---|---|---|
| HANSEN ALLEN & LUCE inc ENGINEERS | HEATH Engineering Company | DESIGNED RJH | 3 | | | | |
| | | DRAFTED KGM | 2 | | | | |
| | | CHECKED RJH | 1 | | | | |
| | | DATE MAY 26, 2022 | NO. | DATE | REVISIONS | BY | APVD. |

SCALE

SOUTH SALT LAKE

DOWNTOWN SEWER IMPROVEMENTS AND PUMP STATION
ELECTRICAL
ONE-LINE DIAGRAM

SHEET I-601

126.42.300

I:\26058\01 - DWG\ELEC\SHEET\26058 - I-601.dwg, 4/19/2024 5:02:31 PM, Heath Engineering co\GJE

SCADA

PLC-1

PUMP ROOM HIGH TEMP — TAH 218
PUMP ROOM LOW TEMP — TAL 218
WET WELL PUMP ROOM TEMP — TIR 218 — TI 218
ELEC. ROOM HIGH TEMP — TAH 219
ELEC. ROOM LOW TEMP — TAL 219
ELEC. ROOM TEMP. — TIR 219 — TI 219
DRY PIT HIGH LEVEL — LAH 228 — LAH 228
GRINDER RUNNING — XI -
GRINDER ALARM — XI -
SCREEN RUNNING — XI -
AUGER RUNNING — XI -
MOTOR CONTROL ALARM — YA -
SCREEN ROOM HIGH LEVEL — LAH -
SCREEN INFLUENT LEVEL — LT -
SCREEN EFFLUENT LEVEL — LT -
SCREEN HIGH LEVEL ALARM — LAHH -
FLAMMABLE GAS LEL — AT -
FLAMMABLE GAS ALARM HI — AAH - — 10%
FLAMMABLE GAS ALARM HI-HI — AAHH - — 20%
LOW LOW FUEL LEVEL — LALL 222
LOW FUEL LEVEL — LAL 222
FUEL STORAGE TANK LEVEL — LI 222 — LI 222
FUEL STORAGE TANK LEAK ALARM — YA 223 — YA 223
GEN PR-ALARM — YA1 220
GENERATOR RUNNING — YIR 220
GENERATOR NOT IN AUTO — YA2 220
GENERATOR FAILURE — YA3 220
ATS NORMAL POSITION — YI1 221 — YI1 221
ATS STANDBY POSITION — YI2 221 — YI2 221
ELECTRICAL ROOM DOOR OPEN — YA 230 — ZA 230

COM
COM
NETWORK
C106
C105
HEADWORKS SCREEN CONTROLLER
MULTIPLE SIGNALS. SEE PLANS
C112
LE -
LE -
FROM HEADWORKS
TO SYSTEM
HEADWORKS SCREEN

C100
GRINDER CONTROLLER
HEADWORKS EQUIPMENT

LSH 229
FLOOD SWITCH

C101
R
24V
GAS PANEL
C109
C101
AE

C101
C101

C106
C109

GENERATOR ALARM RELAY CONTACTS
C110
HOA — HS 220
ESTOP — HS 220
RUNNING — YI 220
FAIL — YA 220
IN AUTO — YI 220
FAIL — YI 220
RUN
C100
GENERATOR

LT 223
YA 223
FUEL STORAGE TANK

ATS-1

C100

TIT 218 — PUMP ROOM TEMP.
TIT 219 — ELECTRICAL ROOM TEMP.
LSH 228 — FLOOD SWITCH

DS 230A
DS 230B
C100

PROFESSIONAL ENGINEER
# 11573207-2202
ROBERT J. HILLYER
09/19/2024
STATE OF UTAH

HANSEN ALLEN & LUCE inc ENGINEERS
HEATH Engineering Company

| | | | | | | |
|---|---|---|---|---|---|---|
| DESIGNED RJH | 3 | | · | | | |
| DRAFTED KGM | 2 | | | | | |
| CHECKED RJH | 1 | | | | | |
| DATE MAY 26, 2022 | NO. | DATE | REVISIONS | BY | APVD. | |

SCALE ·

SOUTH SALT LAKE

DOWNTOWN SEWER IMPROVEMENTS AND PUMP STATION
ELECTRICAL
ONE-LINE DIAGRAM

SHEET I-602
126.42.300

I:\2065\501 - DWG\ELEC\SHEET\2065S - I-602.dwg, 4/19/2024 5:02:34 PM, Heath Engineering csv\GJE