# SPANISH FORK CITY CORPORATION

## SPANISH FORK & MAPLETON WRF

### JULY 2022

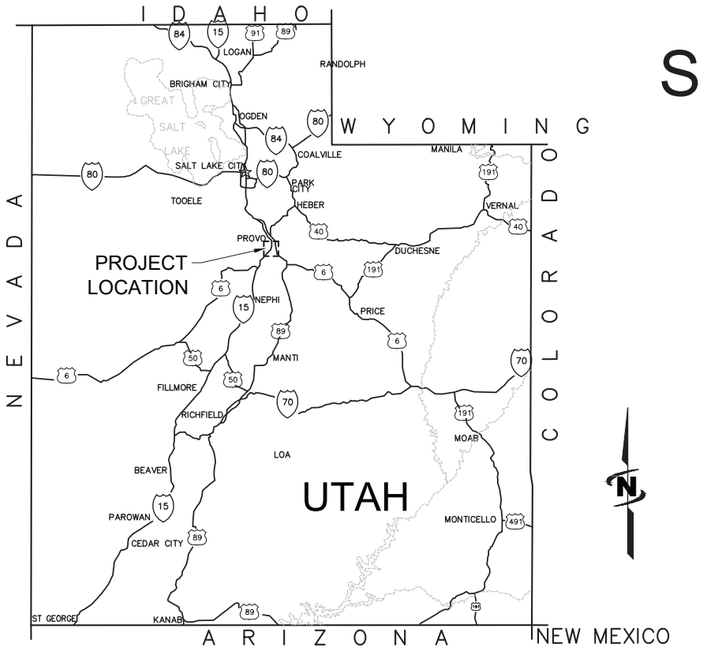


AREA MAP

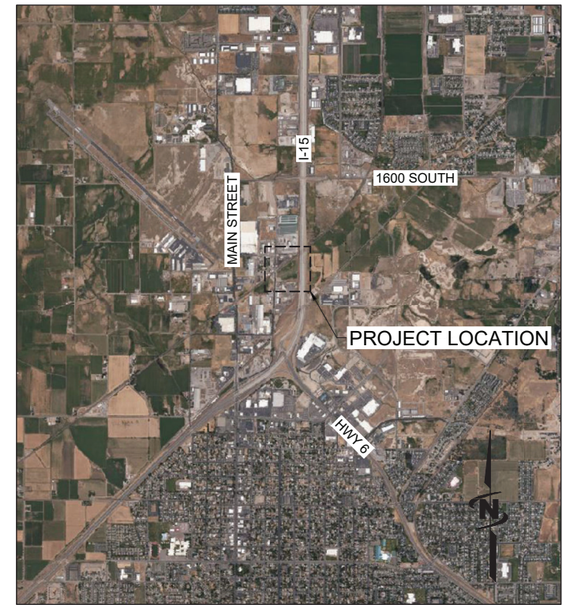


VICINITY MAP

CITY OF SPANISH FORK

MIKE MENDENHALL, MAYOR
CHAD ARGYLE, CITY COUNCIL
STACY BECK, CITY COUNCIL
BRANDON GORDON, CITY COUNCIL
KEVIN OYLER, CITY COUNCIL
SHANE MARSHALL, CITY COUNCIL
SETH PERRINS, CITY MANAGER
CHRIS THOMPSON, PUBLIC WORKS DIRECTOR / CITY ENGINEER
JORDAN HALES, FINANCE DIRECTOR
JERED JOHNSON, ENGINEERING DIVISION MANAGER
KEITH BROADHEAD, ENGINEERING PROJECT MANAGER
CORY PIERCE, WASTEWATER DIVISION MANAGER

CITY OF MAPLETON

STEVEN LORD, PUBLIC WORKS DIRECTOR / CITY ENGINEER

AGENCY REVIEW

VOLUMES

| | |
|---|---|
| VOLUME I | FRONT END DOCUMENTS |
| VOLUME II | TECHNICAL SPECIFICATIONS |
| VOLUME III | DRAWINGS |
| VOLUME IV | EQUIPMENT PROCUREMENT CONTRACT DOCUMENTS |

PROJECT NO. 55-20-124


**J-U-B ENGINEERS, INC.**

392 E. Winchester St., Suite 300, Salt Lake City, UT 84107
*p* 801 886 9052 *w* www.jub.com

OTHER J-U-B COMPANIES THE LANGDON GROUP GATEWAY MAPPING INC.

Stantec

OLSEN & PETERSON consulting engineers, inc.

THALMANN ARCHITECT


811 Know what's below. Call before you dig.

**CALL 2 BUSINESS DAYS IN ADVANCE BEFORE YOU DIG, GRADE, OR EXCAVATE FOR THE MARKING OF UNDERGROUND MEMBER UTILITIES**


REUSE OF DOCUMENTS

J-U-B grants to CLIENT a nonexclusive, non-transferable license to use the Drawings, Specifications and/or Contract Documents (Documents) as follows:

CLIENT may make and retain copies of the Documents for reference, but J-U-B shall retain all common law, statutory and other reserved rights, including the copyright thereto, and the same shall not be reused on this Project or any other Project without J-U-B's prior written consent. Distribution of Documents to meet regulatory or permitting requirements, or for similar purposes, in connection with the Project, including but not limited to distribution to contractors or subcontractors for the performance of their work, is not to be construed as publication adversely affecting the reserved rights of J-U-B. The Documents are not intended for use in creating dtm for grading or earthwork, survey staking layout (unless specifically identified as such in the documents), or property boundary layouts.

Any reuse without written consent by J-U-B, or without verification or adoption by J-U-B for the specific purpose intended by the reuse, will be at CLIENT's sole risk and without liability or legal exposure to J-U-B. The CLIENT shall release, defend, indemnify, and hold J-U-B harmless from any claims, damages, actions or causes of action, losses, and expenses, including reasonable attorneys' and expert fees, arising out of or resulting from such reuse.

If the Documents are provided in electronic format, the electronic documents are subject to the provisions of J-U-B's "electronic document/data limited license" found at edocs.jub.com


LAST UPDATED: 7/8/2022

DRAWING: 00-G-001

SHEET: 1 OF 691


Plot Date:7/7/2022 11:47 AM Plotted By: Jeremy Burns
Date Created:7/7/2022 \\JUB.COM\CENTRAL\CLIENTS\UT\SPANISHFORK\CITYPROJECTS\55-20-124_SPANISHFORK&MAPLETONWRFDESIGN\DESIGN\CAD\SHEET\GENERALONSITE\55-20-124_00G-001X.DWG
00G-001X.DWG

| VOLUME III | | |
|---|---|---|
| NUMBER | DRAWING | TITLE |
| GENERAL (G) | | |
| 1 | 00-G-001 | COVER SHEET |
| 2 | 00-G-002 | ENGINEER STAMPS |
| 3 | 00-G-003 | SHEET INDEX - I |
| 4 | 00-G-004 | SHEET INDEX - II |
| 5 | 00-G-005 | GENERAL NOTES |
| 6 | 00-G-006 | DRAWING DESIGNATORS |
| 7 | 00-G-007 | EQUIPMENT AND PIPE SERVICE ABBREVIATIONS |
| 8 | 00-G-008 | SURVEYING AND SITE CIVIL SYMBOLS |
| 9 | 00-G-009 | MECHANICAL AND MISCELLANEOUS SYMBOLS |
| 10 | 00-G-010 | DESIGN CRITERIA - I |
| 11 | 00-G-011 | DESIGN CRITERIA - II |
| 12 | 00-G-012 | HYDRAULIC PROFILES - I |
| 13 | 00-G-013 | HYDRAULIC PROFILES - II |
| 14 | 00-G-014 | HYDRAULIC PROFILES - III |
| 15 | 00-G-015 | PROCESS FLOW DIAGRAM |
| 16 | 00-G-016 | FACILITY LAYOUT MAP |
| 17 | 00-G-017 | PIPE SCHEDULE |
| 18 | 00-G-018 | PIPE MATERIAL SCHEDULE |
| 19 | 00-G-019 | EQUIPMENT SCHEDULE - I |
| 20 | 00-G-020 | EQUIPMENT SCHEDULE - II |
| 21 | 00-G-021 | VALVE SCHEDULE - I |
| 22 | 00-G-022 | VALVE SCHEDULE - II |
| 23 | 00-G-023 | VALVE SCHEDULE - III |
| 24 | 00-G-024 | VALVE SCHEDULE - IV |
| 25 | 00-G-025 | VALVE SCHEDULE - V |
| 26 | 00-G-026 | VALVE SCHEDULE - VI |
| 27 | 00-G-027 | GATE SCHEDULE |
| SURVEY (V) | | |
| 28 | 05-V-101 | SURVEY CONTROL |
| 29 | 05-V-102 | ALIGNMENTS |
| CIVIL (C) | | |
| 30 | 00-C-901 | STANDARD DETAILS - I |
| 31 | 00-C-902 | STANDARD DETAILS - II |
| 32 | 00-C-903 | STANDARD DETAILS - III |
| 33 | 05-C-001 | SHEET KEY |
| 34 | 05-C-101 | SITE LAYOUT |
| 35 | 05-C-102 | OVERALL GRADING PLAN |
| 36 | 05-C-103 | OVERALL UTILITY PLAN |
| 37 | 05-C-104 | EXISTING SITE TOPOGRAPHY |
| 38 | 05-C-105 | GEOTECHNICAL INVESTIGATION LOCATIONS |
| CIVIL (C): CIVIL GRADING (CG) | | |
| 39 | 05-CG-101 | PARTIAL GRADING PLAN AREA A |
| 40 | 05-CG-102 | PARTIAL GRADING PLAN AREA B |
| 41 | 05-CG-103 | PARTIAL GRADING PLAN AREA C |
| 42 | 05-CG-104 | PARTIAL GRADING PLAN AREA D |
| 43 | 05-CG-105 | PARTIAL GRADING PLAN AREA E |
| 44 | 05-CG-106 | PARTIAL GRADING PLAN AREA F |
| 45 | 05-CG-107 | PARTIAL GRADING PLAN AREA G |
| 46 | 05-CG-108 | PARTIAL GRADING PLAN AREA H |
| 47 | 05-CG-201 | 200 EAST PLAN & PROFILE - I |
| 48 | 05-CG-202 | 200 EAST PLAN & PROFILE - II |
| 49 | 05-CG-301 | GRADING CROSS SECTIONS - I |
| 50 | 05-CG-302 | GRADING CROSS SECTIONS - II |
| 51 | 05-CG-303 | GRADING CROSS SECTIONS - III |
| 52 | 05-CG-501 | DETAILS - I |
| 53 | 05-CG-502 | DETAILS - II |
| 54 | 05-CG-503 | DETAILS - III |
| CIVIL (C): CIVIL UTILITIES (CU) | | |
| 55 | 05-CU-101 | PARTIAL UTILITY PLAN AREA A |
| 56 | 05-CU-102 | PARTIAL UTILITY PLAN AREA B |
| 57 | 05-CU-103 | PARTIAL UTILITY PLAN AREA C |
| 58 | 05-CU-104 | PARTIAL UTILITY PLAN AREA D |
| 59 | 05-CU-105 | PARTIAL UTILITY PLAN AREA E |
| 60 | 05-CU-106 | PARTIAL UTILITY PLAN AREA F |
| 61 | 05-CU-107 | PARTIAL UTILITY PLAN AREA G |
| 62 | 05-CU-108 | PARTIAL UTILITY PLAN AREA H |
| 63 | 05-CU-201 | SSWR PROFILE - I |
| 64 | 05-CU-202 | SSWR PROFILE - II |
| 65 | 05-CU-203 | SSWR PROFILE - III |
| 66 | 05-CU-204 | UPRR PLAN & PROFILE |
| 67 | 05-CU-205 | 200 EAST PLAN & PROFILE |
| 68 | 05-CU-502 | METERING MANHOLE DETAIL |
| 69 | 05-CU-503 | MAG METER VAULT DETAILS |
| 70 | 05-CU-504 | CONNECTION DETAILS - I |
| 71 | 05-CU-506 | STORM DRAIN DETAILS |
| 72 | 70-CU-101 | EXISTING WRF UTILITY PLAN |
| 73 | 70-CU-102 | EXISTING WRF YARD PIPING PLAN - I |
| 74 | 70-CU-103 | EXISTING WRF YARD PIPING PLAN - II |
| 75 | 70-CU-104 | EXISTING WRF YARD PIPING PLAN - III |
| 76 | 70-CU-201 | EXISTING WRF YARD PIPING PROFILE |
| 77 | 70-CU-501 | YARD PIPING DETAILS - I |
| LANDSCAPE (L) | | |
| 78 | 05-LP-001 | PLANTING NOTES - I |
| 79 | 05-LP-101 | PLANTING PLAN |
| 80 | 05-LP-501 | PLANTING DETAILS |
| 81 | 05-LI-001 | IRRIGATION NOTES AND MATERIAL SCHEDULE |
| 82 | 05-LI-101 | IRRIGATION PLAN |
| 83 | 05-LI-102 | SUPPLEMENTAL TREE WATERING SYSTEM |
| 84 | 05-LI-501 | IRRIGATION DETAILS - I |
| 85 | 05-LI-502 | IRRIGATION DETAILS - II |
| 86 | 05-LI-503 | IRRIGATION DETAILS - III |
| STRUCTURAL (S) | | |
| 87 | 00-S-001 | GENERAL NOTES - I |
| 88 | 00-S-002 | GENERAL NOTES - II |
| 89 | 00-S-901 | STANDARD DETAILS - I |
| 90 | 00-S-902 | STANDARD DETAILS - II |
| 91 | 00-S-903 | STANDARD DETAILS - III |
| 92 | 00-S-904 | STANDARD DETAILS - IV |
| 93 | 00-S-905 | STANDARD DETAILS - V |
| 94 | 00-S-906 | STANDARD DETAILS - VI |
| 95 | 00-S-907 | STANDARD DETAILS - VII |
| 96 | 00-S-908 | STANDARD DETAILS - VIII |
| 97 | 00-S-909 | STANDARD DETAILS - IX |
| 98 | 00-S-910 | STANDARD DETAILS - X |

| VOLUME III | | |
|---|---|---|
| NUMBER | DRAWING | TITLE |
| 99 | 00-S-911 | STANDARD DETAILS - XI |
| 100 | 00-S-912 | STANDARD DETAILS - XII |
| 101 | 00-S-913 | STANDARD DETAILS - XIII |
| 102 | 00-S-914 | STANDARD DETAILS - XIV |
| 103 | 00-S-915 | STANDARD DETAILS - XV |
| 104 | 00-S-916 | STANDARD DETAILS - XVI |
| 105 | 00-S-917 | STANDARD DETAILS - XVII |
| 106 | 00-S-918 | STANDARD DETAILS - XVIII |
| 107 | 00-S-919 | STANDARD DETAILS - XIX |
| 108 | 00-S-920 | STANDARD DETAILS - XX |
| 109 | 10-S-001 | ISOMETRIC VIEW |
| 110 | 10-S-101 | BASEMENT FOUNDATION PLAN |
| 111 | 10-S-102 | TRENCH FOUNDATION PLAN |
| 112 | 10-S-103 | GROUND LEVEL FOUNDATION & FLOOR FRAMING PLAN - OVERALL |
| 113 | 10-S-104 | GROUND LEVEL FOUNDATION & FLOOR FRAMING PLAN - AREA A & AREA C |
| 114 | 10-S-105 | GROUND LEVEL FOUNDATION & FLOOR FRAMING PLAN - AREA B |
| 115 | 10-S-106 | LOWER ROOF FRAMING PLAN - AREA A & AREA C |
| 116 | 10-S-107 | UPPER LEVEL FRAMING PLAN - AREA B |
| 117 | 10-S-108 | UPPER ROOF FRAMING PLAN - AREA B |
| 118 | 10-S-201 | BASEMENT CEILING EMBED & BRIDGE CRANE PLAN |
| 119 | 10-S-202 | GROUND LEVEL CEILING EMBED & MONORAIL PLAN |
| 120 | 10-S-301 | BUILDING SECTION - I |
| 121 | 10-S-302 | BUILDING SECTION - II |
| 122 | 10-S-303 | BUILDING SECTION - III |
| 123 | 10-S-304 | BUILDING SECTION - IV |
| 124 | 10-S-305 | BUILDING SECTION - V |
| 125 | 10-S-401 | BASEMENT STRUCTURAL SLAB REBAR LAYOUT PLAN |
| 126 | 10-S-402 | BASEMENT STRUCTURAL SLAB REBAR LAYOUT SECTION |
| 127 | 10-S-403 | GROUND LEVEL STRUCTURAL SLAB REBAR LAYOUT PLAN |
| 128 | 10-S-404 | GROUND LEVEL STRUCTURAL SLAB REBAR LAYOUT SECTIONS |
| 129 | 10-S-405 | UPPER LEVEL STRUCTURAL SLAB REBAR LAYOUT PLAN |
| 130 | 10-S-411 | ENLARGED CONCRETE SECTION - I |
| 131 | 10-S-412 | ENLARGED CONCRETE SECTION - II |
| 132 | 10-S-413 | ENLARGED CONCRETE SECTION - III |
| 133 | 10-S-414 | ENLARGED CONCRETE SECTION - IV |
| 134 | 10-S-415 | ENLARGED CONCRETE SECTION - V |
| 135 | 10-S-416 | ENLARGED CONCRETE SECTION - VI |
| 136 | 10-S-417 | ENLARGED CONCRETE SECTION - VII |
| 137 | 10-S-420 | ENLARGED CMU WALL SECTIONS - I |
| 138 | 10-S-421 | ENLARGED CMU WALL SECTIONS - II |
| 139 | 10-S-422 | ENLARGED CMU WALL SECTIONS - III |
| 140 | 10-S-423 | ENLARGED CMU WALL SECTIONS - IV |
| 141 | 10-S-424 | ENLARGED CMU WALL SECTIONS - V |
| 142 | 10-S-425 | ENLARGED CMU WALL SECTIONS - VI |
| 143 | 10-S-426 | CONCRETE PAD FOR GAC TANK |
| 144 | 10-S-501 | DETAILS - I |
| 145 | 10-S-502 | DETAILS - II |
| 146 | 10-S-503 | DETAILS - III |
| 147 | 10-S-504 | DETAILS - IV |
| 148 | 10-S-505 | DETAILS - V |
| 149 | 10-S-506 | DETAILS - VI |
| 150 | 10-S-507 | DETAILS - VII |
| 151 | 10-S-508 | DETAILS - VIII |
| 152 | 10-S-509 | DETAILS - IX |
| 153 | 10-S-510 | DETAILS - X |
| 154 | 10-S-511 | DETAILS - XI |
| 155 | 10-S-512 | DETAILS - XII |
| 156 | 10-S-513 | DETAILS - XIII |
| 157 | 10-S-514 | DETAILS - IX |
| 158 | 10-S-521 | DETAILS - XIV |
| 159 | 10-S-522 | DETAILS - XV |
| 160 | 10-S-701 | ROOF TRUSS DESIGN LOADS |
| 161 | 20-S-001 | ISOMETRIC VIEWS |
| 162 | 20-S-101 | OVERALL FOUNDATION PLAN |
| 163 | 20-S-102 | OVERALL CONTROL JOINT PLAN |
| 164 | 20-S-103 | TOP OF WALKWAY PLAN |
| 165 | 20-S-201 | ELEVATIONS |
| 166 | 20-S-301 | BASIN SECTIONS - I |
| 167 | 20-S-302 | BASIN SECTIONS - II |
| 168 | 20-S-303 | BASIN SECTIONS - III |
| 169 | 20-S-304 | BASIN SECTIONS - IV |
| 170 | 20-S-401 | FOUNDATION PLAN - I |
| 171 | 20-S-402 | FOUNDATION PLAN - II |
| 172 | 20-S-403 | FOUNDATION PLAN - III |
| 173 | 20-S-404 | FOUNDATION PLAN - IV |
| 174 | 20-S-411 | ENLARGED FLOOR FRAMING PLAN - I |
| 175 | 20-S-412 | ENLARGED FLOOR FRAMING PLAN - II |
| 176 | 20-S-413 | ENLARGED FLOOR FRAMING PLAN - III |
| 177 | 20-S-414 | ENLARGED FLOOR FRAMING PLAN - IV |
| 178 | 20-S-421 | ENLARGED CONCRETE SECTIONS - I |
| 179 | 20-S-422 | ENLARGED CONCRETE SECTIONS - II |
| 180 | 20-S-423 | ENLARGED CONCRETE SECTIONS - III |
| 181 | 20-S-424 | ENLARGED CONCRETE SECTIONS - IV |
| 182 | 20-S-425 | ENLARGED CONCRETE SECTIONS - V |
| 183 | 20-S-426 | ENLARGED CONCRETE SECTIONS - VI |
| 184 | 20-S-501 | DETAILS - I |
| 185 | 20-S-502 | DETAILS - II |
| 186 | 20-S-503 | DETAILS - III |
| 187 | 20-S-504 | DETAILS - IV |
| 188 | 20-S-505 | DETAILS - V |
| 189 | 20-S-506 | DETAILS - VI |
| 190 | 20-S-510 | DETAILS - VII |
| 191 | 20-S-511 | DETAILS - VIII |
| 192 | 20-S-512 | DETAILS - IV |
| 193 | 20-S-521 | METAL FABRICATION DETAILS - I |
| 194 | 20-S-522 | METAL FABRICATION DETAILS - II |
| 195 | 20-S-523 | METAL FABRICATION DETAILS - III |
| 196 | 20-S-530 | METAL STAIR SYSTEM - I |
| 197 | 20-S-531 | METAL STAIR SYSTEM - II |
| 198 | 20-S-532 | METAL STAIR SYSTEM - III |
| 199 | 20-S-533 | METAL STAIR SYSTEM - IV |
| 200 | 20-S-534 | METAL STAIR SYSTEM - V |
| 201 | 20-S-535 | METAL STAIR SYSTEM - VI |
| 202 | 30-S-001 | ISOMETRIC VIEWS |
| 203 | 30-S-101 | FOUNDATION PLAN & TOP OF PLATFORM PLANS |

| VOLUME III | | |
|---|---|---|
| NUMBER | DRAWING | TITLE |
| 204 | 30-S-102 | ROOF AND CRANE RAIL FRAMING PLANS |
| 205 | 30-S-301 | OVERALL BASIN SECTION |
| 206 | 30-S-401 | ENLARGED CONCRETE SECTIONS - I |
| 207 | 30-S-402 | ENLARGED CONCRETE SECTIONS - II |
| 208 | 30-S-403 | ENLARGED CONCRETE SECTIONS - III |
| 209 | 30-S-404 | ENLARGED CONCRETE SECTIONS - IV |
| 210 | 30-S-405 | ENLARGED CONCRETE SECTIONS - V |
| 211 | 30-S-406 | ENLARGED CONCRETE SECTIONS - VI |
| 212 | 30-S-407 | ENLARGED CONCRETE SECTIONS - VII |
| 213 | 30-S-501 | DETAILS - I |
| 214 | 30-S-502 | DETAILS - II |
| 215 | 30-S-503 | DETAILS - III |
| 216 | 30-S-504 | DETAILS - IV |
| 217 | 35-S-001 | ISOMETRIC VIEWS |
| 218 | 35-S-101 | FOUNDATION PLAN |
| 219 | 35-S-102 | ROOF FRAMING PLAN |
| 220 | 35-S-301 | BUILDING SECTIONS |
| 221 | 35-S-401 | ENLARGED PLANS |
| 222 | 35-S-402 | ENLARGED INTERIOR CMU WALL SECTION - I |
| 223 | 35-S-403 | ENLARGED INTERIOR CMU WALL SECTION - II |
| 224 | 35-S-404 | ENLARGED CMU WALL SECTIONS - I |
| 225 | 35-S-405 | ENLARGED CMU WALL SECTIONS - II |
| 226 | 35-S-406 | ENLARGED CMU WALL SECTIONS - III |
| 227 | 35-S-407 | ENLARGED CMU WALL SECTIONS - IV |
| 228 | 35-S-421 | PIPE SUPPORT PLAN |
| 229 | 35-S-501 | DETAILS - I |
| 230 | 35-S-502 | DETAILS - II |
| 231 | 35-S-503 | DETAILS - III |
| 232 | 35-S-504 | DETAILS - IV |
| 233 | 35-S-505 | DETAILS - V |
| 234 | 35-S-506 | DETAILS - VI |
| 235 | 35-S-507 | DETAILS - VII |
| 236 | 35-S-701 | DETAILS - VIII |
| 237 | 50-S-001 | ISOMETRIC VIEWS |
| 238 | 50-S-101 | MAT FOUNDATION PLAN |
| 239 | 50-S-102 | FOUNDATION PLAN |
| 240 | 50-S-103 | ROOF FRAMING PLAN |
| 241 | 50-S-301 | BUILDING SECTIONS - I |
| 242 | 50-S-302 | BUILDING SECTIONS - II |
| 243 | 50-S-401 | ENLARGED CONCRETE SECTIONS - I |
| 244 | 50-S-402 | ENLARGED CONCRETE SECTIONS - II |
| 245 | 50-S-403 | ENLARGED CONCRETE SECTIONS - III |
| 246 | 50-S-404 | ENLARGED CONCRETE SECTIONS - IV |
| 247 | 50-S-405 | ENLARGED CONCRETE SECTIONS - V |
| 248 | 50-S-501 | DETAILS - I |
| 249 | 50-S-502 | DETAILS - II |
| 250 | 50-S-503 | DETAILS - III |
| 251 | 50-S-504 | DETAILS - IV |
| 252 | 50-S-505 | DETAILS - V |
| 253 | 50-S-701 | ROOF TRUSS DESIGN LOADS |
| 254 | 60-S-001 | ISOMETRIC VIEW |
| 255 | 60-S-101 | FOUNDATION PLAN |
| 256 | 60-S-301 | BASIN SECTION |
| 257 | 60-S-401 | ENLARGED CONCRETE WALL SECTION - I |
| 258 | 60-S-402 | ENLARGED CONCRETE WALL SECTION - II |
| 259 | 60-S-403 | ENLARGED CONCRETE WALL SECTION - III |
| ARCHITECTURAL (A) | | |
| 260 | 00-A-601 | SCHEDULES - I |
| 261 | 00-A-602 | SCHEDULES - II |
| 262 | 00-A-603 | SCHEDULES - III |
| 263 | 00-A-604 | SCHEDULES - IV |
| 264 | 00-A-901 | TYPICAL DETAILS - I |
| 265 | 00-A-902 | TYPICAL DETAILS - II |
| 266 | 00-A-903 | TYPICAL DETAILS - III |
| 267 | 00-A-904 | TYPICAL DETAILS - IV |
| 268 | 00-A-905 | TYPICAL DETAILS - V |
| 269 | 10-A-001 | CODE SUMMARY |
| 270 | 10-A-002 | EGRESS PLANS - I |
| 271 | 10-A-003 | EGRESS PLANS - II |
| 272 | 10-A-101 | OVERALL BASEMENT LEVEL PLAN |
| 273 | 10-A-102 | OVERALL GROUND LEVEL PLAN |
| 274 | 10-A-103 | OVERALL UPPER LEVEL PLAN |
| 275 | 10-A-104 | OVERALL ROOF PLAN |
| 276 | 10-A-105 | BASEMENT LEVEL PLANS AREAS B |
| 277 | 10-A-106 | GROUND LEVEL PLAN AREAS A AND C |
| 278 | 10-A-107 | GROUND LEVEL PLAN AREA B |
| 279 | 10-A-108 | UPPER LEVEL AREA PLAN AREA B |
| 280 | 10-A-109 | ROOF PLANS AREAS A AND C |
| 281 | 10-A-110 | ROOF PLAN AREA B |
| 282 | 10-A-111 | BASEMENT LEVEL REFLECTED CEILING PLAN AREAS B |
| 283 | 10-A-112 | GROUND LEVEL REFLECTED CEILING PLAN AREAS A AND C |
| 284 | 10-A-113 | GROUND LEVEL REFLECTED CEILING PLAN AREA B |
| 285 | 10-A-114 | UPPER LEVEL REFLECTED CEILING PLAN AREA B |
| 286 | 10-A-201 | ELEVATIONS - I |
| 287 | 10-A-202 | ELEVATIONS - II |
| 288 | 10-A-203 | ELEVATIONS - III |
| 289 | 10-A-204 | ELEVATIONS - IV |
| 290 | 10-A-301 | SECTIONS - I |
| 291 | 10-A-302 | SECTIONS - II |
| 292 | 10-A-303 | SECTIONS - III |
| 293 | 10-A-304 | SECTIONS - IV |
| 294 | 10-A-305 | SECTIONS - V |
| 295 | 10-A-401 | STAIR PLANS |
| 296 | 10-A-501 | DETAILS - I |
| 297 | 10-A-502 | DETAILS - II |
| 298 | 35-A-001 | CODE SUMMARY |
| 299 | 35-A-002 | EGRESS PLAN |
| 300 | 35-A-101 | OVERALL FLOOR PLAN |
| 301 | 35-A-102 | OVERALL ROOF PLAN |
| 302 | 35-A-103 | FLOOR PLAN AREA A |
| 303 | 35-A-104 | FLOOR PLAN AREA B |
| 304 | 35-A-105 | ROOF PLAN AREA A |
| 305 | 35-A-106 | ROOF PLAN AREA B |
| 306 | 35-A-107 | REFLECTED CEILING PLAN AREA A |
| 307 | 35-A-108 | REFLECTED CEILING PLAN AREA B |

| VOLUME III | | |
|---|---|---|
| NUMBER | DRAWING | TITLE |
| 308 | 35-A-201 | ELEVATIONS - I |
| 309 | 35-A-202 | ELEVATIONS - II |
| 310 | 35-A-301 | SECTIONS - I |
| 311 | 35-A-302 | SECTIONS - II |
| 312 | 35-A-501 | DETAILS - I |
| 313 | 35-A-502 | DETAILS - II |
| 314 | 35-A-901 | ENLARGE PLANS - I |
| 315 | 35-A-902 | ENLARGE PLANS - II |
| 316 | 35-A-903 | INTERIOR ELEVATIONS - I |
| 317 | 35-A-904 | INTERIOR ELEVATIONS - II |
| 318 | 35-A-905 | INTERIOR ELEVATIONS - III |
| 319 | 50-A-001 | CODE SUMMARY |
| 320 | 50-A-101 | FLOOR PLAN |
| 321 | 50-A-102 | ROOF PLAN |
| 322 | 50-A-103 | REFLECTED CEILING PLAN |
| 323 | 50-A-201 | ELEVATIONS - I |
| 324 | 50-A-202 | ELEVATIONS - II |
| 325 | 50-A-301 | SECTIONS |
| 326 | 50-A-501 | DETAILS |


J-U-B ENGINEERS, INC.

J-U-B ENGINEERS, INC.
392. E. Winchester St., Suite 300
Salt Lake City, UT 84107
Phone: 801.547.0393
www.jub.com

Subconsultant:

Stantec

Stantec
2890 E Cottonwood Pkwy
Suite 300, Salt Lake City, Ut
84121
Tel: +1.801.617.3200
www.stantec.com


AGENCY

REVIEW


REUSE OF DRAWINGS
J-U-B SHALL RETAIN ALL COMMON LAW STATUTORY, COPYRIGHT AND OTHER RESERVED RIGHTS OF THESE DRAWINGS, AND THE SAME SHALL NOT BE REUSED WITHOUT J-U-B'S PRIOR WRITTEN CONSENT. ANY REUSE WITHOUT WRITTEN CONSENT BY J-U-B WILL BE AT CLIENTS SOLE RISK AND WITHOUT LIABILITY OR LEGAL EXPOSURE TO J-U-B.


| NO. | DESCRIPTION | BY | APP'L | DATE |
|---|---|---|---|---|
| | REVISION | | | |

SPANISH FORK & MAPLETON WRF
SPANISH FORK CITY CORPORATION

00 - GENERAL
SHEET INDEX - I

FILE : 55-20-124 00G-001X
JUB PROJ. # : 55-20-124
DRAWN BY: JTB
DESIGN BY: JJG
CHECKED BY: GMV
ONE INCH
AT FULL SIZE, IF NOT ONE INCH, SCALE ACCORDINGLY
LAST UPDATED: 7/8/2022

DRAWING:
00-G-003

SHEET: 3 OF 691


Plot Date:7/7/2022 11:47 AM Plotted By: Jeremy Burns
Date Created:7/7/2022 \\JUB.COM\CENTRAL\CLIENTS\UT\SPANISHFORKCITY\PROJECTS\55-20-124_SPANISHFORK&MAPLETONWRFDESIGN\DESIGN\CADD\SHEETS\GENERAL\ONSITE\55-20-124_00G-001X.DWG

| VOLUME III | | |
|---|---|---|
| NUMBER | DRAWING | TITLE |
| PROCESS MECHANICAL (D) | | |
| 327 | 00-D-901 | STANDARD DETAILS - I |
| 328 | 00-D-902 | STANDARD DETAILS - II |
| 329 | 00-D-903 | STANDARD DETAILS - III |
| 330 | 00-D-904 | STANDARD DETAILS - IV |
| 331 | 00-D-905 | STANDARD DETAILS - V |
| 332 | 00-D-906 | STANDARD DETAILS - VI |
| 333 | 00-D-907 | STANDARD DETAILS - VII |
| 334 | 00-D-908 | STANDARD DETAILS - VIII |
| 335 | 00-D-909 | STANDARD DETAILS - IX |
| 336 | 00-D-910 | STANDARD DETAILS - X |
| 337 | 00-D-911 | STANDARD DETAILS - XI |
| 338 | 00-D-912 | STANDARD DETAILS - XII |
| 339 | 00-D-913 | STANDARD DETAILS - XIII |
| 340 | 00-D-914 | STANDARD DETAILS - XIV |
| 341 | 00-D-915 | STANDARD DETAILS - XV |
| 342 | 10-D-001 | BUILDING ISOMETRICS |
| 343 | 10-D-101 | BASEMENT PLAN VIEW |
| 344 | 10-D-102 | GROUND FLOOR PLAN VIEW |
| 345 | 10-D-103 | UPPER FLOOR PLAN VIEW |
| 346 | 10-D-301 | COARSE SCREENS SECTION VIEW |
| 347 | 10-D-302 | OVERALL BUILDING SECTION VIEW - I |
| 348 | 10-D-303 | OVERALL BUILDING SECTION VIEW - II |
| 349 | 10-D-400 | COARSE SCREENING ROOM ISOMETRIC |
| 350 | 10-D-401 | COARSE SCREENING ROOM |
| 351 | 10-D-402 | GRIT WASHING AND DEWATERING AREA |
| 352 | 10-D-403 | COARSE SCREENING ROOM SECTION VIEW |
| 353 | 10-D-404 | COARSE SCREENING AND WASH PRESS SECTION VIEW |
| 354 | 10-D-405 | GRIT WASHER SECTION VIEW - I |
| 355 | 10-D-406 | GRIT WASHER SECTION VIEW - II |
| 356 | 10-D-407 | WASH PRESS DRAIN SECTION |
| 357 | 10-D-408 | GRIT CHAMBER SECTION VIEW |
| 358 | 10-D-410 | DRY WELL PUMP ROOM ISOMETRIC |
| 359 | 10-D-411 | DRY WELL PUMP ROOM |
| 360 | 10-D-412 | DRY WELL PUMP ROOM SECTION VIEW |
| 361 | 10-D-413 | WET AND DRY WELL SECTION VIEW |
| 362 | 10-D-414 | GRIT PUMPS SECTION VIEWS |
| 363 | 10-D-420 | FINE SCREENING WASHPRESS ROOM |
| 364 | 10-D-421 | FINE SCREENING ROOM |
| 365 | 10-D-422 | FINE SCREENING SECTION VIEW |
| 366 | 10-D-423 | FINE SCREENING DISCHARGE SECTION AND ENLARGED PLAN |
| 367 | 10-D-501 | COARSE SCREENING/GRIT LODOR DETAILS |
| 368 | 10-D-502 | FINE SCREENING LODOR DETAILS |
| 369 | 10-D-503 | NPW BOOSTER PUMP STATION - I |
| 370 | 10-D-504 | NPW BOOSTER PUMP STATION - II |
| 371 | 10-D-505 | GAC SYSTEM ISOMETRIC AND PLAN |
| 372 | 10-D-506 | GAC SYSTEM SECTION VIEWS |
| 373 | 10-D-507 | DETAILS |
| 374 | 20-D-001 | ISO VIEW |
| 375 | 20-D-101 | LOWER OVERALL PLAN |
| 376 | 20-D-102 | LOWER PARTIAL PLAN - I |
| 377 | 20-D-103 | LOWER PARTIAL PLAN - II |
| 378 | 20-D-104 | LOWER PARTIAL PLAN - III |
| 379 | 20-D-105 | LOWER PARTIAL PLAN - IV |
| 380 | 20-D-106 | UPPER OVERALL PLAN |
| 381 | 20-D-107 | UPPER PARTIAL PLAN - I |
| 382 | 20-D-108 | UPPER PARTIAL PLAN - II |
| 383 | 20-D-109 | UPPER PARTIAL PLAN - III |
| 384 | 20-D-110 | UPPER PARTIAL PLAN - IV |
| 385 | 20-D-301 | SECTIONS - I |
| 386 | 20-D-302 | SECTIONS - II |
| 387 | 20-D-303 | SECTIONS - III |
| 388 | 20-D-304 | SECTIONS - IV |
| 389 | 20-D-305 | SECTIONS - V |
| 390 | 20-D-306 | SECTIONS - VI |
| 391 | 20-D-307 | SECTIONS - VII |
| 392 | 20-D-308 | SECTIONS - VIII |
| 393 | 30-D-001 | ISO VIEW - I |
| 394 | 30-D-002 | ISO VIEW - II |
| 395 | 30-D-101 | LOWER PLAN |
| 396 | 30-D-102 | UPPER PLAN |
| 397 | 30-D-301 | SECTIONS - I |
| 398 | 30-D-302 | SECTIONS - II |
| 399 | 30-D-303 | SECTIONS - III |
| 400 | 30-D-304 | SECTIONS - IV |
| 401 | 30-D-305 | SECTIONS - V |
| 402 | 30-D-401 | ENLARGED PLAN AND SECTIONS |
| 403 | 30-D-402 | ENLARGED PLAN - I |
| 404 | 30-D-403 | ENLARGED PLAN - II |
| 405 | 35-D-001 | ISO VIEW - I |
| 406 | 35-D-002 | ISO VIEW - II |
| 407 | 35-D-101 | OVERALL PLAN |
| 408 | 35-D-102 | PARTIAL PLAN - PROCESS ROOM |
| 409 | 35-D-103 | PARTIAL PLAN - BLOWER ROOM |
| 410 | 35-D-104 | PARTIAL PLAN - CHEMICAL STORAGE ROOM |
| 411 | 35-D-301 | SECTIONS - I |
| 412 | 35-D-302 | SECTIONS - II |
| 413 | 35-D-303 | SECTIONS - III |
| 414 | 35-D-304 | SECTIONS - IV |
| 415 | 35-D-305 | SECTION - V |
| 416 | 35-D-306 | SECTION - VI |
| 417 | 35-D-401 | ENLARGED PLAN – RAS PUMPS AREA |
| 418 | 35-D-402 | ENLARGED PLAN – PERMEATE PUMPS AREA |
| 419 | 35-D-403 | ENLARGED SECTION - I |
| 420 | 35-D-404 | ENLARGED SECTION - II |
| 421 | 35-D-405 | ENLARGED SECTION - III |
| 422 | 50-D-001 | ISOMETRIC VIEW |
| 423 | 50-D-101 | OVERALL PLAN |
| 424 | 50-D-102 | PARTIAL PLAN - PLANT WATER PUMP STATION |
| 425 | 50-D-103 | PARTIAL PLAN - BLOWER ROOM |
| 426 | 50-D-301 | SECTION - I |
| 427 | 50-D-302 | SECTION - II |
| 428 | 50-D-303 | SECTION - III |
| 429 | 60-D-101 | OVERALL PLAN |
| 430 | 60-D-301 | SECTIONS |

| VOLUME III | | |
|---|---|---|
| NUMBER | DRAWING | TITLE |
| 431 | 70-D-101 | DIGESTER CONTROL BUILDING MAIN FLOOR PLAN VIEW |
| 432 | 70-D-102 | DIGESTER CONTROL BUILDING BASEMENT PLAN VIEW |
| 433 | 70-D-103 | SOLIDS HANDLING TANK PLAN VIEW |
| 434 | 70-D-104 | PLANT DRAIN LIFT STATION PLAN VIEW |
| 435 | 70-D-301 | DIGESTER CONTROL BUILDING SECTION VIEW |
| 436 | 70-D-302 | SOLIDS HANDLING TANK SECTION VIEW - I |
| 437 | 70-D-303 | SOLIDS HANDLING TANK SECTION VIEW - II |
| 438 | 70-D-304 | SOLIDS HANDLING TANK SECTION VIEW - III |
| 439 | 70-D-305 | PLANT DRAIN LIFT STATION SECTION VIEW |
| 440 | 70-DD-701 | DIGESTER CONTROL BUILDING MAIN FLOOR DEMOLITION PLAN |
| 441 | 70-DD-702 | DIGESTER CONTROL BUILDING BASEMENT DEMOLITION PLAN |
| 442 | 70-DD-703 | DIGESTER CONTROL BUILDING DEMOLITION SECTION |
| 443 | 70-DD-704 | DIGESTER DEMOLITION SECTION VIEW |
| BUILDING MECHANICAL (M) | | |
| 444 | 10-M-101 | BASEMENT LEVEL |
| 445 | 10-M-102 | GROUND FLOOR LEVEL |
| 446 | 10-M-103 | UPPER FLOOR |
| 447 | 10-M-104 | ROOF PLAN |
| 448 | 10-M-501 | DETAILS |
| 449 | 10-M-502 | AIRFLOW SCHEMATIC |
| 450 | 10-M-601 | SCHEDULES |
| 451 | 35-M-101 | OVERALL MECHANICAL PLAN |
| 452 | 35-M-102 | ROOF PLAN |
| 453 | 35-M-501 | DETAILS - I |
| 454 | 35-M-502 | DETAILS - II |
| 455 | 35-M-601 | SCHEDULES |
| 456 | 50-M-101 | MECHANICAL |
| 457 | 50-M-102 | ROOF PLAN |
| 458 | 50-M-501 | DETAILS |
| 459 | 70-M-101 | DIGESTER CONTROL - BUILDING MECHANICAL PLAN - PHASE 2 |
| PLUMBING (P) | | |
| 460 | 10-P-101 | BASEMENT LEVEL PLUMBING PLAN |
| 461 | 10-P-102 | GROUND FLOOR LEVEL PLUMBING PLAN |
| 462 | 10-P-103 | UPPER FLOOR PLUMBING PLAN |
| 463 | 10-P-401 | ENLARGED PLUMBING PLAN |
| 464 | 10-P-501 | DETAILS |
| 465 | 10-P-601 | SCHEDULES |
| 466 | 35-FP-101 | FIRE PROTECTION |
| 467 | 35-FP-501 | FIRE PROTECTION DETAILS |
| 468 | 35-P-101 | OVERALL PLUMBING PLAN |
| 469 | 35-P-401 | ENLARGED PLANS |
| 470 | 35-P-501 | DETAILS |
| 471 | 35-P-601 | SCHEDULES |
| 472 | 50-P-101 | PLUMBING |
| 473 | 50-P-501 | DETAILS |
| INSTRUMENTATION (I) | | |
| 474 | 00-I-001 | SYMBOLS AND NOMENCLATURE - I |
| 475 | 00-I-002 | SYMBOLS AND NOMENCLATURE - II |
| 476 | 00-I-003 | SYMBOLS AND NOMENCLATURE - III |
| 477 | 00-I-004 | SYMBOLS AND NOMENCLATURE - IV |
| 478 | 00-I-006 | SAMPLE WIRING DIAGRAM - I |
| 479 | 00-I-007 | SAMPLE WIRING DIAGRAM - II |
| 480 | 00-I-601 | NETWORK BLOCK DIAGRAM |
| 481 | 00-I-602 | HEADWORKS NETWORK BLOCK DIAGRAM |
| 482 | 00-I-603 | AERATION BLOWERS NETWORK BLOCK DIAGRAM |
| 483 | 00-I-604 | MBR NETWORK BLOCK DIAGRAM |
| 484 | 00-I-901 | INSTALLATION DETAILS - I |
| 485 | 00-I-902 | INSTALLATION DETAILS - II |
| 486 | 00-I-903 | INSTALLATION DETAILS - III |
| 487 | 00-I-904 | INSTALLATION DETAILS - IV |
| 488 | 00-I-905 | INSTALLATION DETAILS - V |
| 489 | 00-I-906 | INSTALLATION DETAILS - VI |
| 490 | 00-I-907 | INSTALLATION DETAILS - VII |
| 491 | 00-I-908 | INSTALLATION DETAILS - VIII |
| 492 | 00-I-909 | INSTALLATION DETAILS - IX |
| 493 | 00-I-910 | INSTALLATION DETAILS - X |
| 494 | 00-I-911 | INSTALLATION DETAILS - XI |
| 495 | 00-I-912 | INSTALLATION DETAILS - XII |
| 496 | 00-I-913 | INSTALLATION DETAILS - XIII |
| 497 | 00-I-914 | INSTALLATION DETAILS - XIV |
| 498 | 00-I-915 | INSTALLATION DETAILS - XV |
| 499 | 00-I-916 | INSTALLATION DETAILS - XVI |
| 500 | 00-I-917 | INSTALLATION DETAILS - XVII |
| 501 | 05-I-601 | BACKUP GENERATOR SYSTEM - P&ID |
| 502 | 05-I-602 | PLANT DRAINS AND METERING VAULT P&ID |
| 503 | 10-I-601 | COARSE BAR SCREENS - I P&ID |
| 504 | 10-I-602 | COARSE BAR SCREENS - II P&ID |
| 505 | 10-I-603 | COARSE BAR SCREENS - III P&ID |
| 506 | 10-I-604 | COARSE SCREENING WASHER PRESS - P&ID |
| 507 | 10-I-605 | GRIT CHAMBERS P&ID |
| 508 | 10-I-606 | GRIT PUMPS P&ID |
| 509 | 10-I-607 | GRIT WASHERS P&ID |
| 510 | 10-I-608 | LIFT STATION - P&ID |
| 511 | 10-I-609 | FINE DRUM SCREENS - I P&ID |
| 512 | 10-I-610 | FINE DRUM SCREENS - II P&ID |
| 513 | 10-I-611 | FINE DRUM SCREENS - III P&ID |
| 514 | 10-I-612 | FINE DRUM SCREENS - IV P&ID |
| 515 | 10-I-613 | FINE DRUM SCREENS - V P&ID |
| 516 | 10-I-614 | FINE DRUM SCREENS - VI P&ID |
| 517 | 10-I-615 | FINE DRUM SCREENINGS WASH PRESS - I P&ID |
| 518 | 10-I-616 | FINE DRUM SCREENINGS WASH PRESS - II P&ID |
| 519 | 10-I-617 | FINE DRUM SCREENINGS WASH PRESS - III P&ID |
| 520 | 10-I-618 | FINE DRUM SCREENINGS WASH PRESS - IV P&ID |
| 521 | 10-I-619 | FINE DRUM SCREENINGS WASH PRESS - V P&ID |
| 522 | 10-I-620 | FINE DRUM SCREENINGS WASH PRESS - VI P&ID |
| 523 | 10-I-621 | HEADWORKS ODOR CONTROL P&ID |
| 524 | 10-I-622 | HEADWORKS BOOSTER PUMP SKID - P&ID |
| 525 | 10-I-623 | HEADWORKS GAS DETECTION P&ID |
| 526 | 20-I-601 | BNR SPLITTER BOX P&ID |
| 527 | 20-I-602 | BIOLOGICAL NUTRIENT REACTION TRAIN NO 1 - I P&ID |
| 528 | 20-I-603 | BIOLOGICAL NUTRIENT REACTION TRAIN NO 1 - II P&ID |
| 529 | 20-I-604 | BIOLOGICAL REACTION TRAIN NO 2 - I P&ID |
| 530 | 20-I-605 | BIOLOGICAL REACTION TRAIN NO 2 - II P&ID |
| 531 | 20-I-606 | AERATION BLOWERS - I P&ID |
| 532 | 20-I-607 | AERATION BLOWERS - II P&ID |

| VOLUME III | | |
|---|---|---|
| NUMBER | DRAWING | TITLE |
| 533 | 20-I-608 | AERATION BLOWERS - III P&ID |
| 534 | 20-I-609 | AERATION BLOWERS DISTRIBUTION - P&ID |
| 535 | 20-I-610 | BNR TRAIN NO 1 AERATION CONTROL P&ID |
| 536 | 20-I-611 | BNR TRAIN NO 2 AERATION CONTROL P&ID |
| 537 | 30-I-601 | MBR BASIN NO 1 P&ID |
| 538 | 30-I-602 | MBR BASIN NO 2 P&ID |
| 539 | 30-I-603 | MBR BASIN NO 3 P&ID |
| 540 | 30-I-604 | MBR BASIN NO 4 P&ID |
| 541 | 30-I-605 | MBR BASIN NO 5 P&ID |
| 542 | 30-I-606 | MBR BASIN NO 6 P&ID |
| 543 | 30-I-607 | RAS / WAS CHANNEL P&ID |
| 544 | 35-I-601 | MBR BASIN NO 1 PERMEATE PUMP P&ID |
| 545 | 35-I-602 | MBR BASIN NO 2 PERMEATE PUMP P&ID |
| 546 | 35-I-603 | MBR BASIN NO 3 PERMEATE PUMP P&ID |
| 547 | 35-I-604 | MBR BASIN NO 4 PERMEATE PUMP P&ID |
| 548 | 35-I-605 | MBR BASIN NO 5 PERMEATE PUMP P&ID |
| 549 | 35-I-606 | MBR BASIN NO 6 PERMEATE PUMP P&ID |
| 550 | 35-I-607 | MBR COMBINED PERMEATE HEADER P&ID |
| 551 | 35-I-608 | MBR COMBINED PERMEATE WET PANEL P&ID |
| 552 | 35-I-609 | RAS PUMPS - I P&ID |
| 553 | 35-I-610 | RAS PUMPS - II P&ID |
| 554 | 35-I-611 | AIR SCOUR BLOWERS - I P&ID |
| 555 | 35-I-612 | AIR SCOUR BLOWERS - II P&ID |
| 556 | 35-I-613 | AIR SCOUR BLOWERS - III P&ID |
| 557 | 35-I-614 | CITRIC ACID STORAGE AND FEED - I |
| 558 | 35-I-615 | CITRIC ACID STORAGE AND FEED - II P&ID |
| 559 | 35-I-616 | CITRIC ACID STORAGE AND FEED - III P&ID |
| 560 | 35-I-617 | SODIUM HYPOCHLORITE STORAGE AND FEED - I P&ID |
| 561 | 35-I-618 | SODIUM HYPOCHLORITE STORAGE AND FEED - II P&ID |
| 562 | 35-I-619 | ALUM STORAGE AND FEED - I |
| 563 | 35-I-620 | ALUM STORAGE AND FEED - II |
| 564 | 35-I-621 | MBR INSTRUMENT AIR SYSTEM P&ID |
| 565 | 50-I-601 | UV SYSTEM P&ID |
| 566 | 55-I-601 | UTILITY WATER SYSTEM P&ID |
| 567 | 60-I-601 | REAERATION BLOWERS P&ID |
| 568 | 60-I-602 | REAERATION BASIN P&ID |
| 569 | 70-I-601 | SOLIDS HOLDING TANK AND SLUDGE FEED PUMPS P&ID |
| 570 | 70-I-602 | SOLIDS HOLDING TANK NO 2 - P&ID |
| 571 | 70-I-603 | AERATION BLOWERS P&ID |
| 572 | 70-I-604 | LIFT STATION - P&ID |
| ELECTRICAL (E) | | |
| 573 | 00-E-001 | SYMBOLS - I |
| 574 | 00-E-002 | SYMBOLS - II |
| 575 | 00-E-003 | NOTES AND ABBREVIATIONS |
| 576 | 00-E-901 | STANDARD DETAILS - I |
| 577 | 00-E-902 | STANDARD DETAILS - II |
| 578 | 00-E-903 | STANDARD DETAILS - III |
| 579 | 00-E-904 | STANDARD DETAILS - IV |
| 580 | 00-E-905 | STANDARD DETAILS - V |
| 581 | 00-E-906 | FIXTURE SCHEDULE |
| 582 | 00-E-910 | SPANISH FORK POWER AND LIGHT DETAILS |
| 583 | 05-E-001 | OVERALL SINGLE LINE DIAGRAM |
| 584 | 00-E-002 | GENERATOR SWITCHGEAR SINGLE LINE DIAGRAM |
| 585 | 00-E-003 | GENERATOR SWITCHGEAR ELEVATION |
| 586 | 05-E-101 | OVERALL SITE PLAN |
| 587 | 05-E-102 | AREA 1 SITE PLAN |
| 588 | 05-E-103 | AREA 2 SITE PLAN |
| 589 | 05-E-104 | AREA 3 SITE PLAN |
| 590 | 05-E-105 | AREA 4 SITE PLAN |
| 591 | 05-E-601 | SITE CONDUIT DEVELOPMENT - I |
| 592 | 05-E-602 | SITE CONDUIT DEVELOPMENT - II |
| 593 | 05-E-603 | SITE SCHEDULES |
| 594 | 10-E-001 | SINGLE LINE DIAGRAM - I |
| 595 | 10-E-002 | SINGLE LINE DIAGRAM - II |
| 596 | 10-E-101 | BASEMENT FLOOR AREA CLASSIFICATION PLAN |
| 597 | 10-E-102 | GROUND FLOOR AREA CLASSIFICATION PLAN |
| 598 | 10-E-103 | UPPER FLOOR AREA CLASSIFICATION PLAN |
| 599 | 10-E-104 | OVERALL BASEMENT FLOOR PLAN |
| 600 | 10-E-105 | OVERALL GROUND FLOOR PLAN |
| 601 | 10-E-106 | OVERALL UPPER FLOOR PLAN |
| 602 | 10-E-401 | BASEMENT FLOOR PLAN |
| 603 | 10-E-402 | GROUND FLOOR PARTIAL PLAN - I |
| 604 | 10-E-403 | GROUND FLOOR PARTIAL PLAN - II |
| 605 | 10-E-404 | GROUND FLOOR PARTIAL PLAN - III |
| 606 | 10-E-405 | GROUND FLOOR PARTIAL PLAN - IV |
| 607 | 10-E-406 | ROOF POWER PLAN |
| 608 | 10-E-407 | BASEMENT FLOOR LIGHTING, RECEPTACLE AND GROUNDING PLAN - I |
| 609 | 10-E-408 | GROUND FLOOR LIGHTING, RECEPTACLE AND GROUNDING PLAN - I |
| 610 | 10-E-409 | GROUND FLOOR LIGHTING, RECEPTACLE AND GROUNDING PLAN - II |
| 611 | 10-E-410 | GROUND FLOOR LIGHTING, RECEPTACLE AND GROUNDING PLAN - III |
| 612 | 10-E-411 | GROUND FLOOR LIGHTING, RECEPTACLE AND GROUNDING PLAN - IV |
| 613 | 10-E-412 | UPPER FLOOR LIGHTING, RECEPTABLE AND GROUNDING PLAN |
| 614 | 10-E-601 | CONDUIT DEVELOPMENT - I |
| 615 | 10-E-602 | CONDUIT DEVELOPMENT - II |
| 616 | 10-E-603 | CONDUIT DEVELOPMENT - III |
| 617 | 10-E-604 | CONDUIT DEVELOPMENT - IV |
| 618 | 10-E-605 | CONDUIT DEVELOPMENT - V |
| 619 | 10-E-610 | PANEL SCHEDULES |
| 620 | 10-E-611 | CONTROL SCHEMATICS - I |
| 621 | 10-E-612 | CONTROL SCHEMATICS - II |
| 622 | 10-E-613 | CONTROL SCHEMATICS - III |
| 623 | 10-E-614 | CONTROL SCHEMATICS - IV |
| 624 | 10-E-615 | CONTROL SCHEMATICS - V |
| 625 | 10-E-616 | CONTROL SCHEMATICS - VI |
| 626 | 20-E-101 | AREA CLASSIFICATION PLAN |
| 627 | 20-E-102 | OVERALL LOWER PLAN |
| 628 | 20-E-103 | OVERALL UPPER PLAN |
| 629 | 20-E-401 | LOWER FLOOR POWER PLAN - I |
| 630 | 20-E-402 | LOWER FLOOR POWER PLAN - II |
| 631 | 20-E-403 | UPPER FLOOR POWER PLAN - I |
| 632 | 20-E-404 | UPPER FLOOR POWER PLAN - II |
| 633 | 20-E-405 | UPPER FLOOR POWER PLAN - III |
| 634 | 20-E-406 | UPPER FLOOR POWER PLAN - IV |
| 635 | 20-E-407 | OVERALL LIGHTING PLAN |
| 636 | 20-E-601 | CONDUIT DEVELOPMENT - I |

| VOLUME III | | |
|---|---|---|
| NUMBER | DRAWING | TITLE |
| 637 | 20-E-602 | CONDUIT DEVELOPMENT - II |
| 638 | 20-E-603 | CONDUIT DEVELOPMENT - III |
| 639 | 20-E-604 | CONDUIT DEVELOPMENT - IV |
| 640 | 30-E-101 | AREA CLASSIFICATION PLAN |
| 641 | 30-E-102 | LOWER LEVEL ELECTRICAL PLAN |
| 642 | 30-E-103 | UPPER LEVEL POWER AND EQUIPMENT PLAN |
| 643 | 30-E-104 | LIGHTING AND GROUNDING PLAN |
| 644 | 30-E-601 | CONDUIT DEVELOPMENT - I |
| 645 | 30-E-602 | CONDUIT DEVELOPMENT - II |
| 646 | 35-E-001 | SINGLE LINE DIAGRAM - I |
| 647 | 35-E-002 | SINGLE LINE DIAGRAM - II |
| 648 | 35-E-003 | SINGLE LINE DIAGRAM - III |
| 649 | 35-E-101 | OVERALL ELECTRICAL PLAN |
| 650 | 35-E-401 | POWER PARTIAL PLAN - I |
| 651 | 35-E-402 | POWER PARTIAL PLAN - II |
| 652 | 35-E-403 | POWER PARTIAL PLAN - III |
| 653 | 35-E-404 | POWER PARTIAL PLAN - IV |
| 654 | 35-E-405 | ROOF POWER PLAN |
| 655 | 35-E-406 | LIGHTING, RECEPTACLE AND GROUNDING PARTIAL PLAN - I |
| 656 | 35-E-407 | LIGHTING, RECEPTACLE AND GROUNDING PARTIAL PLAN - II |
| 657 | 35-E-408 | LIGHTING, RECEPTACLE AND GROUNDING PARTIAL PLAN - III |
| 658 | 35-E-409 | LIGHTING, RECEPTACLE AND GROUNDING PARTIAL PLAN - IV |
| 659 | 35-E-601 | CONDUIT DEVELOPMENT - I |
| 660 | 35-E-602 | CONDUIT DEVELOPMENT - II |
| 661 | 35-E-603 | CONDUIT DEVELOPMENT - III |
| 662 | 35-E-604 | CONDUIT DEVELOPMENT - IV |
| 663 | 35-E-605 | CONDUIT DEVELOPMENT - V |
| 664 | 35-E-610 | PANEL SCHEDULES - I |
| 665 | 35-E-611 | PANEL SCHEDULES - II |
| 666 | 35-E-612 | CONTROL SCHEMATICS - I |
| 667 | 35-E-613 | CONTROL SCHEMATICS - II |
| 668 | 35-E-614 | CONTROL SCHEMATICS - III |
| 669 | 35-E-615 | CONTROL SCHEMATICS - IV |
| 670 | 35-E-616 | CONTROL SCHEMATICS - V |
| 671 | 35-E-617 | CONTROL SCHEMATICS - VI |
| 672 | 50-E-001 | SINGLE LINE DIAGRAM |
| 673 | 50-E-101 | OVERALL ELECTRICAL PLAN |
| 674 | 50-E-401 | POWER PARTIAL PLAN - I |
| 675 | 50-E-402 | POWER PARTIAL PLAN - II |
| 676 | 50-E-403 | POWER PARTIAL PLAN - III |
| 677 | 50-E-404 | LIGHTING, RECEPTACLE AND GROUNDING PARTIAL PLAN - I |
| 678 | 50-E-405 | LIGHTING, RECEPTACLE AND GROUNDING PARTIAL PLAN - II |
| 679 | 50-E-406 | LIGHTING, RECEPTACLE AND GROUNDING PARTIAL PLAN - III |
| 680 | 50-E-407 | OVERALL ELECTRICAL ROOF PLAN |
| 681 | 50-E-601 | CONDUIT DEVELOPMENT - I |
| 682 | 50-E-602 | CONDUIT DEVELOPMENT - II |
| 683 | 50-E-610 | PANEL SCHEDULES |
| 684 | 50-E-611 | CONTROL SCHEMATICS - I |
| 685 | 50-E-612 | CONTROL SCHEMATICS - II |
| 686 | 70-E-001 | SINGLE LINE DIAGRAM |
| 687 | 70-E-101 | SITE PLAN |
| 688 | 70-E-102 | DIGESTER CONTROL BUILDING |
| 689 | 70-E-103 | SOLIDS HOLDING TANK |
| 690 | 70-E-601 | SCHEMATICS |
| 691 | 70-E-602 | CONDUIT DEVELOPMENT |


J-U-B ENGINEERS, INC.

J-U-B ENGINEERS, INC.
392. E. Winchester St., Suite 300
Salt Lake City, UT 84107
Phone: 801.547.0393
www.jub.com

Subconsultant:

Stantec
Stantec
2890 E Cottonwood Pkwy
Suite 300, Salt Lake City, Ut
84121
Tel: +1.801.617.3200
www.stantec.com


AGENCY

REVIEW


REUSE OF DRAWINGS
J-U-B SHALL RETAIN ALL COMMON LAW STATUTORY, COPYRIGHT AND OTHER RESERVED RIGHTS OF THESE DRAWINGS, AND THE SAME SHALL NOT BE REUSED WITHOUT J-U-B'S PRIOR WRITTEN CONSENT. ANY REUSE WITHOUT WRITTEN CONSENT BY J-U-B WILL BE AT CLIENTS SOLE RISK AND WITHOUT LIABILITY OR LEGAL EXPOSURE TO J-U-B.


| NO. | DESCRIPTION | BY | APP'L | DATE |
|---|---|---|---|---|
| REVISION | | | | |

SPANISH FORK & MAPLETON WRF
SPANISH FORK CITY CORPORATION

00 - GENERAL
SHEET INDEX - II

FILE : 55-20-124_00G-001X
JUB PROJ. # : 55-20-124
DRAWN BY: JTB
DESIGN BY: JJG
CHECKED BY: GMV

ONE INCH
AT FULL SIZE, IF NOT ONE INCH, SCALE ACCORDINGLY

LAST UPDATED: 7/8/2022

DRAWING:
00-G-004

SHEET: 4 OF 691


Plot Date:7/7/2022 11:47 AM Plotted By: Jeremy Burns
Date Created:7/7/2022 \\JUB.COM\CENTRAL\CLIENTS\UT\SPANISHFORKCITY\PROJECTS\55-20-124_SPANISHFORK&MAPLETONWRFDESIGN\DESIGN\CAD\SHEET\GENERALONSITE\55-20-124_00G-001X.DWG

## INSTRUMENTATION CALL - OUT

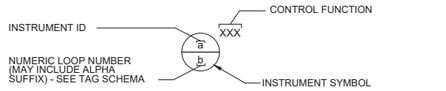


## INSTRUMENT SYMBOLS

XXX a b — FIELD MOUNTED INSTRUMENT

XXX a b — FIELD MOUNTED SHARED DISPLAY/CONTROL

XXX a b — FRONT OF PANEL INSTRUMENT

XXX a b — CONTROL SYSTEM SHARED DISPLAY/CONTROL (ACCESSIBLE VIA OI / HMI)

XXX a b — INSTRUMENT MOUNTED WITHIN PANEL

XXX a b — CONTROL SYSTEM SHARED DISPLAY/CONTROL (ACCESSIBLE FROM WITHIN PANEL)

XXX XXX — SINGLE INSTRUMENT WITH MULTIPLE FUNCTIONS

I — RELAY INTERLOCK LOGIC

I — GENERIC SOFTWARE INTERLOCK / CONTROL LOGIC (NORMALLY ACCESSIBLE TO OPERATOR) *

I — GENERIC SOFTWARE INTERLOCK / CONTROL LOGIC (OPERATOR INACCESSIBLE) *

DATA ROUTING ARROW

CR — CONTROL RELAY

1 — ON-PAGE LOGIC LINK REFERENCE

LSA — LIGHTNING SURGE ARRESTOR

a — INSTRUMENT IDENTIFICATION / TAG NUMBER (SEE MODIFIED ISA TABLE FOR MORE INFO)

XXXV — PRIMARY ELECTRICAL POWER (e.g. 24VDC, 120VAC, 220VAC, 480VAC)

b — INSTRUMENT LOOP NUMBER

NOTE: IF INSTRUMENT POWER NOT INDICATED, REFER TO INSTRUMENT SCHEDULE FOR CONFIRMATION.

XXX — CONTROL FUNCTION

* REFER TO SPEC SECTION 409300 (PROJECT CONTROL PHILOSOPHY) FOR DETAILS.

### PLC / REMOTE I/O POINTS

ANALOG INPUT — DISCRETE INPUT — DATA SIGNAL ANALOG INPUT * — DATA SIGNAL DISCRETE INPUT *

ANALOG OUTPUT — DISCRETE OUTPUT — DATA SIGNAL ANALOG OUTPUT * — DATA SIGNAL DISCRET OUTPUT *

* FIELD NETWORK INTERFACE. SEE SPECIFICATION FOR MORE INFORMATION

### COMPUTING OR CONVERTING FUNCTIONS

COMPUTING

CONVERTING

| | | | |
|---|---|---|---|
| SUMMING | DERIVATIVE | EXPONENTIAL | E VOLTAGE |
| MULTIPLYING | AVERAGING | BIAS | I CURRENT |
| DIVIDING | RATIO | HIGH LIMITING | P PNEUMATIC |
| SQ ROOT EXTRACTION | DIFFERENCE | LOW LIMITING | R RESISTANCE (ELECT) |
| PROPORTIONAL | HIGH SELECTING | LINEARIZER | D DIGITAL |
| INTEGRAL | LOW SELECTING | | A ANALOG |
| | | | B BINARY |
| | | | H HYDRAULIC |

### CONTROL FUNCTION DESIGNATIONS

| | | | |
|---|---|---|---|
| AHC | AUTO / HOLD / CLOSE | OLH | OFF / LOW / HIGH |
| AM | AUTO / MANUAL | O/O | ON / OFF |
| AS | AIR SUPPLY | O/R | OVERRIDE |
| BEAR | BEARING | OOR | OUT OF RANGE |
| CLSD | CLOSED | OSC | OPEN / STOP / CLOSE |
| CV | CONTROL VARIABLE | PID | PROPORTIONAL / INTEGRAL / DERIVATIVE |
| DEV | DEVIATION | POT | POTENTIOMETER |
| E-STOP | EMERGENCY STOP | PV | PROCESS VARIABLE |
| ETM | ELAPSED TIME METER | RDY | READY |
| FOR | FORWARD /OFF /REVERSE | R/L | RAISE / LOWER |
| HML | HIGH / MID / LOW | RSL | RAISE / STOP / LOWER |
| HOA | HAND / OFF / AUTO | RST | RESET |
| HOR | HAND / OFF / REMOTE | RTD | RESISTANCE TEMPERATURE DETECTOR |
| LEAK | MOISTURE INTRUSION | SD | SHUTDOWN |
| LOR | LOCAL / OFF / REMOTE | SEL | SELECT |
| L/R | LOCAL / REMOTE | SP | SET POINT |
| LSR | LOCAL / STOP / REMOTE | S/R | START / RESET |
| MOA | MANUAL / OFF / AUTO | S/S | START / STOP |
| MN | MAINTENANCE / NORMAL | STR | START |
| O/C | OPEN / CLOSE | STP | STOP |
| OCA | OPEN / CLOSE / AUTO | TMR | TIMER |
| OL | OVERLOAD | WIND | WINDING |

NOTE:

1. REFER TO DRAWING 00-I-002 FOR ANALYTICAL INSTRUMENT DESIGNATIONS.

## ISA TABLE (MODIFIED)

| | FIRST LETTER | | SUCCEEDING LETTER(S) | | |
|---|---|---|---|---|---|
| | MEASURED OR INITIATING VARIABLE | MODIFIER | READOUT OR PASSIVE FUNCTION | OUTPUT FUNCTION | MODIFIER |
| A | ANALYSIS | | ALARM | | |
| B | BURNER, COMBUSTION | | | | |
| C | CONDUCTIVITY | | | CONTROL | CLOSED |
| D | DENSITY | DIFFERENTIAL | | | |
| E | VOLTAGE | | SENSOR (PRIMARY ELEMENT) | | |
| F | FLOW RATE | RATIO (FRACTION) | | | FORWARD |
| G | | | GAUGE, GLASS, VIEWING DEVICE | | |
| H | HAND | | | | HIGH |
| I | CURRENT (ELECTRICAL) | | INDICATE | | |
| J | POWER | SCAN | | | |
| K | TIME, TIME SCHEDULE | TIME RATE OF CHANGE | | CONTROL STATION | |
| L | LEVEL | | LIGHT | | LOW |
| M | MOISTURE | MOMENTARY | | | MIDDLE, INTERMEDIATE |
| N | TORQUE | | ISOLATE | ISOLATOR | |
| O | | | ORIFICE, RESTRICTION | | OPEN |
| P | PRESSURE, VACUUM | | POINT (TEST) CONNECTION | | |
| Q | QUANTITY | INTEGRATE, TOTALIZE | | | |
| R | RADIATION | | RECORD | | REVERSE |
| S | SPEED, FREQUENCY | SAFETY | | SWITCH | |
| T | TEMPERATURE | | | TRANSMIT | |
| U | MULTIVARIABLE | | MULTIFUNCTION | MULTIFUNCTION | MULTIFUNCTION |
| V | VIBRATION, MECHANICAL ANALYSIS | | | VALVE, DAMPER, LOUVER | |
| W | WEIGHT, FORCE | | WELL | | |
| X | INTRUSION | X AXIS | | | |
| Y | EVENT, STATE, OR PRESENCE | Y AXIS | | COMPUTE, CONVERT | |
| Z | POSITION, DIMENSION | Z AXIS | | DRIVER, ACTUATOR, FINAL CONTROL ELEMENT | |

## TAG SCHEMA

### TYPICAL INSTRUMENT & CONTROL VALVE TAGGING




10-TIC-1101B – – INSTRUMENT SCHEDULE (FULL TAG)
TIC-1101B – – P&ID (PARTIAL TAG)
10 – – – – – – – – PROCESS AREA
TIC – – – – – – INSTRUMENT / VALVE ID
1101 – – – TAG NUMBER
B – – SUFFIX

NOTE: REFER TO GENERAL SHEET 00-I-004 FOR STANDARD INSTRUMENT & CONTROL VALVE CALLOUTS.

### TYPICAL EQUIPMENT TAG FORMAT



10-P-1101B

10-P-1101B – – EQUIPMENT SCHEDULE (FULL TAG)
10 – – – – – – PROCESS AREA
P – – – – – EQUIPMENT ID
1101 - – - TAG NUMBER
B - - SUFFIX

NOTE: REFER TO GENERAL SHEET 00-I-004 FOR STANDARD EQUIPMENT CALLOUTS.

### TYPICAL VALVE TAG / SPEC FORMAT

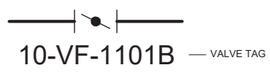


10-VF-1101B – – MANUAL VALVE SCHEDULE (FULL TAG)
10 – – – – – – – PROCESS AREA
VF – – – – – BUTTERFLY VALVE
1101 - – - TAG NUMBER
B - - SUFFIX

NOTE: REFER TO GENERAL SHEET 00-I-004 FOR STANDARD VALVE CALLOUTS.

### TYPICAL PIPE LINE TAG FORMAT

12"-RW (CS08) - - - - - PIPE LINE SCHEDULE (FULL TAG)
12" – – – – – – – – – – NOMINAL PIPE DIAMETER
RW – – – – – – – – FLUID CODE
(CS08) - - - - - PIPE SPEC

## SIGNAL AND PROCESS OFF-PAGE CONNECTORS

PROCESS OR LOGIC CONNECTION TO DRAWING 00-I-001 — 00-I-001 (A)

PROCESS OR LOGIC CONNECTION FROM DRAWING 00-I-001 — 00-I-001 (A)

PROCESS OR LOGIC CONNECTION TO/FROM DRAWING 00-I-001 — 00-I-001 (A)

PROCESS OR LOGIC CONNECTION CONTINUES TO UNREPRESENTED DRAWING

NOTE: REFER TO INSTRUMENTATION LINE SYMBOLOGY FOR PROCESS AND LOGIC LINESTYLE DEFINITION.

## GENERAL INSTRUMENTATION NOTES

1. THE SYMBOLS AND NOMENCLATURE SHEETS ARE REPRESENTATIVE OF A GENERAL STANDARD. THEREFORE, IT SHOULD BE UNDERSTOOD THAT NOT ALL INFORMATION PRESENTED WILL BE RELEVANT TO THIS PROJECT.
2. ADDITIONAL INSTRUMENTATION AND CONTROL SYMBOLS MAY BE USED ASREQUIRED. SYMBOLS AND NOMENCLATURE WILL BE EITHER BASED ON ISA STANDARD 5.1-INSTRUMENTATION SYMBOLS AND IDENTIFICATION OR DEFINED ELSEWHERE IN THE P&ID SET.
3. SEE ELECTRICAL AND PROJECT GENERAL SHEETS FOR ADDITIONAL SYMBOLS AND ABBREVIATIONS.
4. TO CAPTURE THE COMPLETE PROCESS CONTROL INTENT, THE P&IDS MUST TO BE REVIEWED IN CONJUNCTION WITH THE PROJECT CONTROL PHILOSOPHY (SPEC SECTION 409300). THE PROJECT I/O AND INSTRUMENT SCHEDULES AND OTHER SECTIONS REFERENCED HEREIN.

## INSTRUMENTATION LINE SYMBOLOGY

PRIMARY PROCESS LINE

SECONDARY PROCESS LINE

WORK (UNSCREENED)

EXISTING (SCREENED)

EXISTING TO BE DEMOLISHED

FUTURE EQUIPMENT

VENDOR SKID LIMIT

### INSTRUMENT LINE DEFINITIONS
(UNLESS SPECIFICALLY NOTED OTHERWISE PER DRAWING LEGEND)

DATA LINK OR SYSTEM BUS BETWEEN DEVICES

FIBER OPTIC LINK BETWEEN DEVICES

ELECTRICAL SIGNAL

ULTRASONIC SIGNAL

HYDRAULIC SIGNAL

MECHANICAL LINK

PNEUMATIC SIGNAL

AS — AIR SUPPLY

### COMMUNICATION LINE DEFINITIONS
(UNLESS SPECIFICALLY NOTED OTHERWISE PER DRAWING LEGEND)

E — E — UTP (CAT 5e OR CAT 6 AS NOTED)

M — M — MODBUS (RS485)

SINGLE MODE FIBER

MULTIMODE FIBER

VENDOR SIGNAL CABLE

## AREA NUMBERING

| | |
|---|---|
| GENERAL | 00 |
| SITE CIVIL | 05 |
| HEADWORK | 10 |
| FLOW EQUALIZATION (FUTURE) | 15 |
| BNR PROCESS | 20 |
| MBR PROCESS | 30 |
| MBR SUPPORT BUIDLING | 35 |
| TERTIARY TREATMENT (FUTURE) | 40 |
| DISINFECTION | 50 |
| UTILITY WATER | 55 |
| REAERATION | 60 |
| SOLIDS HANDLING | 70 |


J-U-B ENGINEERS, INC.
J-U-B ENGINEERS, INC.
392, E. Winchester St., Suite 300
Salt Lake City, UT 84107
Phone: 801.547.0393
www.jub.com

Subconsultant:
Stantec
Stantec
2890 E Cottonwood Pkwy
Suite 300, Salt Lake City, Ut 84121
Tel: +1.801.617.3200
www.stantec.com


AGENCY

REVIEW


REUSE OF DRAWINGS
J-U-B SHALL RETAIN ALL COMMON LAW STATUTORY, COPYRIGHT AND OTHER RESERVED RIGHTS OF THESE DRAWINGS, AND THE SAME SHALL NOT BE REUSED WITHOUT J-U-B'S PRIOR WRITTEN CONSENT. ANY REUSE WITHOUT WRITTEN CONSENT BY J-U-B WILL BE AT CLIENTS SOLE RISK AND WITHOUT LIABILITY OR LEGAL EXPOSURE TO J-U-B.


| NO. | DESCRIPTION | BY (APR.) | DATE |
|---|---|---|---|
| | REVISION | | |

SPANISH FORK & MAPELTON WRF
SPANISH FORK CITY CORPORATION

INSTRUMENTATION AND CONTROL
SYMBOLS AND NOMENCLATURE - I

FILE : 55-20-124_00I-001
JUB PROJ. # : 55-20-124
DRAWN BY: VBK
DESIGN BY: BH
CHECKED BY: SR
ONE INCH
AT FULL SIZE, IF NOT ONE INCH, SCALE ACCORDINGLY
LAST UPDATED: 6/30/2022

DRAWING:
00-I-001

SHEET: 474 OF 691


Plot Date:6/30/2022 8:02 PM Plotted By: Pinnaduwa-Hewage, Ranga
Date Created:3/2/2021 C:\PLANTCACHE\181301159_SPNSH FRK MAPLTN WRF DESIGN\PID DWG\55-20-124_00I-001.DWG

## FLOW INSTRUMENTS

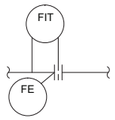


ORIFICE PLATE WITH VENA CONTRACTA, RADIUS, OR PIPE TAPS CONNECTED TO DIFFERENTIAL-PRESSURE -TYPE FLOW TRANSMITTER

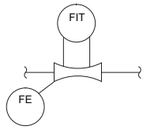


VENTURI TUBE WITH (DIFFERENTIAL PRESSURE) FLOW TRANSMITTER

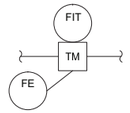


THERMAL MASS FLOW METER

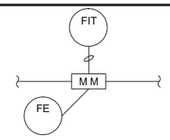


MAGNETIC FLOWMETER WITH REMOTE FLOW TRANSMITTER

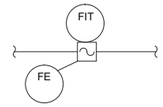


SONIC FLOWMETER DOPPLER OR TRANSIT TIME

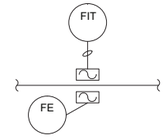


SONIC FLOWMETER CLAMP ON TYPE

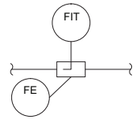


SINGLE PORT PITOT TUBE OR PITOT-VENTURI TUBE

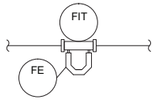


CORIOLIS FLOWMETER

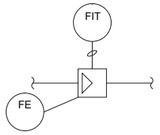


VORTEX FLOW METER




VARIABLE AREA FLOW INDICATOR (ROTAMETER)

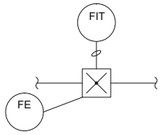


PADDLE WHEEL FLOW METER

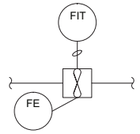


TURBINE OR PROPELLER TYPE FLOW METER

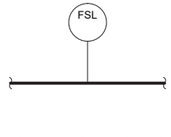


FLOW DETECTION SWITCH THERMAL TYPE

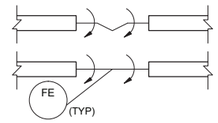


WEIR

## LEVEL INSTRUMENTS

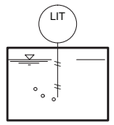


LEVEL TRANSMITTER BUBBLER TYPE

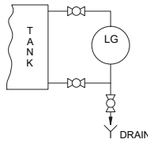


GAUGE GLASS (EXTERNALLY CONNECTED)

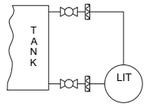


LEVEL TRANSMITTER, SEALED DIFFERENTIAL PRESSURE TYPE (MOUNTED ON TANK)

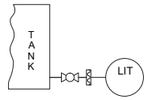


LEVEL TRANSMITTER PRESSURE ACTUATED

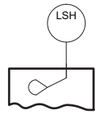


LEVEL DETECTION SWITCH FLOAT ACTUATED TYPE




LEVEL DETECTION SWITCH VIBRATING FORK TYPE




LEVEL DETECTION SWITCH CONDUCTANCE TYPE

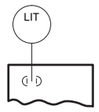


LEVEL TRANSMITTER CAPACITANCE OR DIELECTRIC OR RF ADMITTANCE TYPE

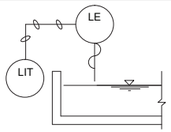


LEVEL TRANSMITTER NON-CONTACTING ULTRASONIC TYPE REMOTE MOUNTED

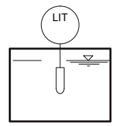


LEVEL TRANSMITTER HYDROSTATIC TYPE

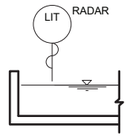


LEVEL TRANSMITTER NON-CONTACTING RADAR TYPE

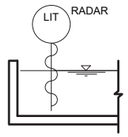


LEVEL TRANSMITTER GUIDED WAVE RADAR TYPE

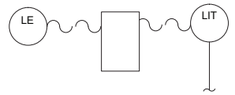


LEVEL TRANSMITTER RADIOACTIVE OR SONIC TYPE WITH INTEGRAL SENSOR

## POSITION INSTRUMENTS

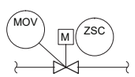


LIMIT SWITCH ON MOTORIZED VALVE INDICATING CLOSED POSITION

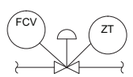


VALVE POSITION TRANSMITTER ON PNEUMATIC ACTUATED VALVE

## TEMPERATURE INSTRUMENTS

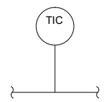


BIMETALLIC TYPE THERMOMETER, GLASS THERMOMETER, OR OTHER LOCAL UNCLASSIFIED TEMPERATURE INDICATOR

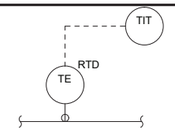


THERMOCOUPLE, RESISTANCE BULB (RTD) OR THERMISTOR (TH) TEMPERATURE TRANSMITTER WITH THERMOWELL

## WEIGHT INSTRUMENTS

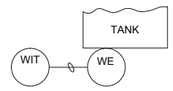


STRAIN GAUGE CONNECTED TO SEPARATE WEIGHT TRANSMITTER (TAG STRAIN GAUGE WE)

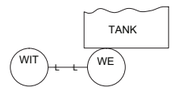


HYDRAULIC ACTUATED WEIGHT TRANSMITTER

## PRESSURE OR VACUUM INSTRUMENTS

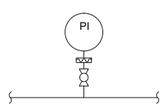


PRESSURE GAUGE WITH DIAPHRAGM SEAL

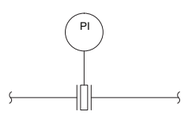


PRESSURE GAUGE WITH LIQUID FILLED ANNULAR SEAL SYSTEM

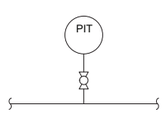


PRESSURE INDICATING TRANSMITTER

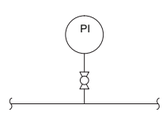


PRESSURE INDICATOR DIRECT - CONNECTED

## ANALYTICAL INSTRUMENTS

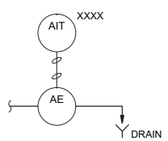


FLOW THROUGH ANALYZING ELEMENT WITH REMOTE TRANSMITTER

| | |
|---|---|
| ALK | ALKALINITY |
| $CL_2$ | CHLORINE CONCENTRATION |
| COMB | COMBUSTIBLE GAS |
| COND | CONDUCTIVITY |
| COD | CHEMICAL OXYGEN DEMAND |
| DO | DISSOLVED OXYGEN |
| HC | HYDROCARBON |
| $H_2O_2$ | HYDROGEN PEROXIDE |
| $H_2S$ | HYDROGEN SULFIDE |
| LEL | LOWER EXPLOSIVE LIMIT |
| $NO_3$ / $NO_2$ | NITRATE / NITRITE |
| $NH_3$ / $NH_4$ | AMMONIA / AMMONIUM |
| $O_2$ | OXYGEN CONCENTRATION |
| $O_3$ | OZONE |
| ORP | OXIDATION - REDUCTION POTENTIAL |
| PC | PARTICLE COUNTER |
| pH | HYDROGEN ION CONCENTRATION |
| SCU | STREAMING CURRENT UNIT |
| SO | SULFUR DIOXIDE |
| TH 2 | TOTAL HARDNESS |
| TKN | TOTAL KJELDAHL NITROGEN |
| TN | TOTAL NITROGEN |
| TOC | TOTAL ORGANIC CARBON |
| TURB | TURBIDITY |
| TSS | TOTAL SUSPENDED SOLIDS |
| UVI | ULTRA VIOLET INTENSITY |
| UVT | ULTRA VIOLET TRANSMITTANCE |

NOTE : IN THE CASE WHERE MULTIPLE SENSORS ARE TIED TO A SINGLE TRANSMITTER OR IN THE CASE OF GAS DETECTION, THE ANALYTIC CALLOUT WILL BE ASSIGNED TO THE SENSOR.


REUSE OF DRAWINGS
J-U-B SHALL RETAIN ALL COMMON LAW, STATUTORY, COPYRIGHT AND OTHER RESERVED RIGHTS OF THESE DRAWINGS, AND THE SAME SHALL NOT BE REUSED WITHOUT J-U-B'S PRIOR WRITTEN CONSENT. ANY REUSE WITHOUT WRITTEN CONSENT BY J-U-B WILL BE AT CLIENTS SOLE RISK AND WITHOUT LIABILITY OR LEGAL EXPOSURE TO J-U-B.


| NO. | DESCRIPTION | BY | APP'L | DATE |
|---|---|---|---|---|
| | REVISION | | | |


J-U-B ENGINEERS, INC.
J-U-B ENGINEERS, INC.
392 E. Winchester St., Suite 300
Salt Lake City, UT 84107
Phone: 801.547.0393
www.jub.com

Subconsultant:
Stantec
Stantec
2890 E Cottonwood Pkwy
Suite 300, Salt Lake City, Ut 84121
Tel: +1.801.617.3200
www.stantec.com


AGENCY

REVIEW

SPANISH FORK & MAPELTON WRF
SPANISH FORK CITY CORPORATION

INSTRUMENTATION AND CONTROL
SYMBOLS AND NOMENCLATURE - II

FILE : 55-20-124_001-002
JUB PROJ. # : 55-20-124
DRAWN BY: VBK
DESIGN BY: BH
CHECKED BY: SR
ONE INCH
AT FULL SIZE, IF NOT ONE INCH, SCALE ACCORDINGLY
LAST UPDATED: 6/30/2022

DRAWING:
00-I-002

SHEET: 475 OF 691


Plot Date:6/30/2022 8:02 PM Plotted By:Pinnaduwa-Hewage, Ranga
Date Created:4/29/2021 C:\PLANTCACHE\181301139_SPNSH FRK MAPLTN WRF DESIGN\PID DWG\55-20-124_001-002.DWG

## VALVES

| | |
|---|---|
| | 3 WAY MULTI-PORT VALVE |
| | 4 WAY MULTI-PORT VALVE |
| | AIR VACUUM, AIR RELEASE, OR COMBINATION AIR VACUUM AND AIR RELEASE ASSEMBLY |
| | ANGLE VALVE |
| | BACK-PRESSURE VALVE |
| | BACKFLOW PREVENTER VALVE |
| | BALL VALVE |
| | BUTTERFLY VALVE |
| | CHECK VALVE |
| | CONE VALVE |
| | DIAPHRAGM VALVE |
| | FLAP VALVE |
| | GATE VALVE |
| | GLOBE VALVE |
| | HOSE BIBB VALVE |
| | NEEDLE VALVE |
| | PINCH VALVE |
| | PLUG VALVE |
| | PRESSURE REGULATING VALVE |
| | PRESSURE RELIEF VALVE |
| | SLEEVE VALVE |
| | TELESCOPING VALVE |
| | FLOAT VALVE |
| | BALL CHECK VALVE |
| | MUD VALVE |

## VALVE AND GATE ACTUATORS

| | |
|---|---|
| | DIAPHRAGM ACTUATOR |
| S | E/H = ELECTROHYDRAULIC<br>P = PNEUMATIC<br>S = SOLENOID |
| M | MOTOR ACTUATOR |
| | PISTON ACTUATOR |
| | WEIGHT BALANCED ACTUATOR |

## GATES

| | |
|---|---|
| | SLIDE GATE |
| | STOP GATE OR SHEAR GATE |

## WASTEWATER EQUIPMENT

| | |
|---|---|
| | BELT FILTER PRESS |
| | SHAFTLESS CONVEYOR |
| | SCREW CONVEYOR |
| | CENTRIFUGE |
| | GRAVITY BELT THICKENER |
| | BELT CONVEYOR |
| | SLUDGE GRINDER |

## HVAC

| | |
|---|---|
| | AIR CONDITIONING UNIT |
| | DUCT AIR FILTER |
| | AIR HANDLING UNIT |
| | NON-MOTORIZED DAMPER |
| M | MOTORIZED DAMPER |
| | DEHUMIDIFIER |
| S | DUCT SMOKE DETECTOR |
| | EVAPORATIVE COOLER |
| | HEATER |
| | HVAC BOILER |
| | HVAC FAN |
| | VENT FAN |
| | HVAC LOUVER |
| T | THERMOSTAT |
| | STEAM GENERATOR |
| | UNIT HEATER |
| WH | WATER HEATER |
| | AFTER COOLER |

## PUMPS & COMPRESSORS

| | |
|---|---|
| | SLUDGE DIAPHRAGM PUMP |
| | HORIZONTAL CENTRIFUGAL PUMP |
| | GENERIC PUMP |
| | CHEMICAL METERING PUMP |
| | DRUM PUMP |
| | ROTARY GEAR PUMP |
| | SPLIT-CASE PUMP |
| | HOSE / PERISTALTIC PUMP |
| | PLUNGER / PISTON PUMP |
| | PROGRESSIVE CAVITY PUMP |
| | ROTARY LOBE PUMP |
| | SUBMERSIBLE SUMP PUMP |
| | SUBMERSIBLE TURBINE PUMP |
| | VERTICAL TURBINE PUMP |
| | VERTICAL CENTRIFUGAL PUMP |
| | INCLINED ARCHIMEDES SCREW PUMP |
| | VERTICAL SUMP PUMP |
| | RECIPROCATING COMPRESSOR |
| | ROTARY SCREW COMPRESSOR |

## PIPING ACCESSORIES

| | |
|---|---|
| | ANNULAR SEAL |
| | ATMOSPHERIC VENT |
| | BLIND FLANGE |
| | CAP - BREATHER |
| | CAP - SCREW / THREADED |
| | CAP - WELDED |
| | CAP - QUICK DISCONNECT |
| | CHLORINE INJECTOR OR CHEMICAL EDUCTOR |
| | DIAPHRAGM SEAL |
| | DRAIN |
| | EXPANSION CHAMBER WITH RUPTURE DISK |
| | EDUCTOR |
| | FLANGED |
| OR | FLEXIBLE CONNECTION - BELLOWS TYPE |
| FA | FLAME ARRESTOR |
| FCO<br>FCO | FLOOR CLEANOUT |
| F | FILTER |
| | HUB DRAIN |
| | INLINE MIXER |
| | PIPE MATERIAL CHANGE |
| | PULSATION DAMPENER |
| | REDUCER - CONCENTRIC |
| | REDUCER - ECCENTRIC |
| | REMOVABLE SPOOL PIECE |
| | UNION |
| | RUPTURE DISK |
| | STRAINER - BASKET TYPE |
| | STRAINER - DUPLEX BASKET TYPE |
| | STRAINER - WYE TYPE |
| | SLOPE |
| T | TRAP |
| OR WCO<br>WCO | WALL CLEANOUT |
| TP | TIE-IN POINT |

## BLOWERS

| | |
|---|---|
| | AERATOR |
| | BLOWER |
| | POSITIVE DISPLACEMENT BLOWER |
| | SINGLE STAGE CENTRIFUGAL BLOWER |

## MISCELLANEOUS

| | |
|---|---|
| | BRIDGE CRANE |
| | CALIBRATION COLUMN |
| | CONTAINER SCALE |
| | CARTRIDGE FILTER |
| | DEMISTOR |
| | FIRE HYDRANT |
| | GAS BOTTLE |
| | HEAT EXCHANGER - PLATE TYPE |
| | HEAT EXCHANGER - STRAIGHT TYPE |
| | HEAT EXCHANGER - U TUBE |
| | HEATER |
| | HORN |
| | PANEL-MOUNTED HORN |
| | BEACON |
| | MISCELLANEOUS EQUIPMENT |
| | MIXER |
| M | MOTOR SYMBOL |
| | HORIZONTAL PRESSURE VESSEL |
| | VERTICAL PRESSURE VESSEL |
| | RADIO ANTENNA |
| | REFRIGERATOR DRYER |
| | SAMPLE COOLER |
| | AUTO-BACKWASHING STRAINER |
| | TANK WITH CONE SHAPED ROOF |
| | TANK WITH DOME ROOF |
| | TANK WITH FLOATING COVER |
| | TANK, VESSEL, OR BIN |
| | TEMPERING TANK |
| | TOTE TANK |
| | WATER LEVEL |
| | GENERATOR |


J-U-B ENGINEERS, INC.

J-U-B ENGINEERS, INC.
392 E. Winchester St., Suite 300
Salt Lake City, UT 84107
Phone: 801.547.0393
www.jub.com

Subconsultant:

Stantec
Stantec
2890 E Cottonwood Pkwy
Suite 300, Salt Lake City, Ut
84121
Tel: +1.801.617.3200
www.stantec.com


AGENCY

REVIEW


REUSE OF DRAWINGS
J-U-B SHALL RETAIN ALL COMMON LAW, STATUTORY, COPYRIGHT AND OTHER RESERVED RIGHTS OF THESE DRAWINGS, AND THE SAME SHALL NOT BE REUSED WITHOUT J-U-B'S PRIOR WRITTEN CONSENT. ANY REUSE WITHOUT WRITTEN CONSENT BY J-U-B WILL BE AT CLIENTS SOLE RISK AND WITHOUT LIABILITY OR LEGAL EXPOSURE TO J-U-B.


| NO. | DESCRIPTION | BY | APP'L | DATE |
|---|---|---|---|---|
| REVISION | | | | |

SPANISH FORK & MAPELTON WRF
SPANISH FORK CITY CORPORATION

INSTRUMENTATION AND CONTROL
SYMBOLS AND NOMENCLATURE - III

FILE : 55-20-124_00I-003
JUB PROJ. # : 55-20-124
DRAWN BY: VBK
DESIGN BY: BH
CHECKED BY: SR
ONE INCH
AT FULL SIZE, IF NOT ONE INCH, SCALE ACCORDINGLY
LAST UPDATED: 6/30/2022

DRAWING:
00-I-003

SHEET: 476 OF 691


Plot Date:6/30/2022 8:02 PM Plotted By: Pinnaduwa-Hewage, Ranga
Date Created:4/29/2021 C:\PLANTCAD\HE\181301159_SPNSH FRK MAPLTN WRF DESIGN\PID DWG\55-20-124_00I-003.DWG

## PROCESS ABBREVIATIONS

| | |
|---|---|
| AERATION | A |
| ALUMINUM SULFATE (LIQUID ALUM) | ALS |
| AMMONIUM HYDROXIDE (AQUEOUS AMMONIA) | AMH |
| AUTOMATIC SPRINKLER RISER | ASR |
| BLEND | B |
| BALLASTED FLOCCULATION POLYMER | BFP |
| BALLASTED FLOCCULATION SOLIDS | BFS |
| BLENDED PRODUCT | BP |
| CONDENSATE | C |
| CALCIUM HYDROXIDE (HYDRATED LIME) | CAH |
| CALCIUM OXIDE (QUICK LIME) | CAO |
| CHANNEL AGITATION WATER | CAW |
| MEMBRANE CLEANING CONCENTRATE RETURN | CCR |
| CHEMICAL DRAIN | CD |
| CONDENSER WATER RETURN | CDR |
| CONDENSER WATER SUPPLY | CDS |
| CHILLED WATER RETURN | CHR |
| CHILLED WATER SUPPLY | CHS |
| CORROSION INHIBITOR | CI |
| CHLORINE (GAS OR LIQUID) | CL |
| CHLORINE SOLUTION | CLS |
| CHLORINE GAS UNDER VACUUM | CLV |
| CENTRATE | CN |
| CONDENSATE DRAIN | CND |
| CHEMICAL CONTAINMENT | CP |
| MEMBRANE CLEANING PERMEATE RETURN | CPR |
| CIRCULATED SLUDGE | CSL |
| CITRIC ACID | CTA |
| CALCIUM THIOSULFATE | CTH |
| CHLORINATOR VENT AND DETECTION | CV |
| CHEMICAL DRAIN VENT | CVT |
| COAGULATED WATER | CW |
| COOLING WATER RETURN | CWR |
| COOLING WATER SUPPLY | CWS |
| DEFOAMING CHEMICAL | DC |
| DOMESTIC COLD WATER | DCW |
| DIESEL FUEL OIL | DFO |
| DEMINERALIZED WATER | DMW |
| DECANT | DN |
| DRAIN | DR |
| DIGESTED SLUDGE | DSL |
| DOMESTIC HOT WATER RETURN | DWR |
| DOMESTIC HOT WATER SUPPLY | DWS |
| ENGINE EXHAUST | EE |
| ENGINE COOLING WATER RETURN | EWR |
| ENGINE COOLING WATER SUPPLY | EWS |
| FOUL AIR | FA |
| FILTER AIR WASH | FAW |
| FILTER BACKWASH | FBW |
| FINAL EFFLUENT | FE |
| FERRIC CHLORIDE | FEC |
| FERRIC SULFATE | FES |
| FILTER INFLUENT | FI |
| FILTERED WATER | FLW |
| FORCE MAIN | FM |
| FUEL OIL RETURN | FOR |
| FUEL OIL SUPPLY | FOS |
| FIRE PROTECTION | FP |
| FROTH | FR |
| FROTH SPRAY | FS |
| FILTER SURFACE WASHWATER | FSW |
| FILTER TO WASTE | FTW |
| FINISHED WATER | FW |
| FILTER WASTE WASHWATER | FWW |
| GRIT | G |
| GRANULAR ACTIVATED CARBON | GAC |
| GASEOUS OXYGEN | GOX |
| HYDROCHLORIC ACID | HCA |
| HYDROGEN PEROXIDE | HDP |
| HYDROFLUOSILICIC ACID | HFA |
| HEATING WATER RETURN | HWR |
| HEATING WATER SUPPLY | HWS |
| INSTRUMENT AIR | IA |
| INTERMEDIATE EFFLUENT | IE |
| LANDFILL GAS | LFG |
| LUBE OIL | LO |
| LIQUID OXYGEN | LOX |
| LIQUEFIED PETROLEUM GAS | LPG |
| LIME SLURRY | LS |
| LANDSCAPING SPRINKLER SYSTEM | LSP |
| MEMBRANE CONCENTRATE | MC |
| MEMBRANE CLEANING RETURN | MCR |
| MEMBRANE CLEANING SUPPLY | MCS |
| MEMBRANE CLEANING WASTE | MCW |
| MECHANICAL DEWATERING POLYMER | MDP |
| MEMBRANE FEED | MF |
| METHANE GAS | MG |
| MIXED LIQUOR | ML |
| MIXED LIQUOR RECYCLE | MLR |
| MEMBRANE PERMEATE | MP |
| MURIATIC ACID | MRA |
| NATURAL GAS | NG |
| NON-LEADED GASOLINE | NLG |
| OVERFLOW | OF |
| OFFGAS | OG |
| OXIDATION TOWER EFFLUENT | OTE |
| OZONE | OZG |
| OZONATED WATER | OZW |
| PLANT AIR | PA |
| POWDERED ACTIVATED CARBON | PAC |
| POLYALUMINUM CHLORIDE | PCL |
| PLANT DRAIN | PDR |
| PRIMARY EFFLUENT | PE |
| PLANT INFLUENT | PI |
| PLANT EFFLUENT | PLE |
| PLANT OVERFLOW | PO |
| ANIONIC POLYMER | POA |
| CATIONIC POLYMER | POC |
| FILTER AID POLYMER | POF |
| NONIONIC POLYMER | PON |
| THICKENER POLYMER | POT |
| PRESSURIZED RECYCLE | PRR |
| PRESSATE | PRS |
| POTASSIUM PERMANGANATE | PTP |
| POTABLE WATER | PW |
| RETURN ACTIVATED SLUDGE | RAS |
| RECLAIMED WATER | REW |
| REFRIGERANT LIQUID | RFL |
| REFRIGERANT SUCTION | RFS |
| REFRIGERANT SUCTION | RSL |
| RETURN SECONDARY SLUDGE | RSS |
| RAW WATER | RW |
| RAINWATER LEADER | RWL |
| RAINWATER LEADER OVERFLOW | RWO |
| SCUM | S |
| SAMPLE | SAM |
| SUBNATANT | SBN |
| SUBNATANT OVERFLOW | SBO |
| SCAVENGER SYSTEM DISCHARGE | SCV |
| SANITARY DRAIN | SD |
| SODIUM BISULFITE | SDB |
| SODIUM HYDROXIDE (CAUSTIC SODA) | SDH |
| STORM DRAIN | SDR |
| SANITARY DRAIN VENT | SDV |

## PROCESS ABBREVIATIONS

| | |
|---|---|
| SECONDARY EFFLUENT | SE |
| SLUDGE FILTRATE | SF |
| SULFURIC ACID | SFA |
| SLUDGE GAS | SG |
| SODIUM HYPOCHLORITE | SHC |
| SCALE INHIBITOR | SI |
| SLUDGE | SL |
| SUPERNATANT | SN |
| SAND SLURRY | SND |
| SULFUR DIOXIDE (GAS OR LIQUID) | SO |
| SULFUR DIOXIDE SOLUTION | SOS |
| SULFUR DIOXIDE GAS UNDER VACUUM | SOV |
| SPARE CHEMICAL | SP |
| SUMP PUMP DISCHARGE | SPD |
| SANITARY SEWER | SS |
| SODIUM SILICOFLUORIDE | SSF |
| STEAM | STM |
| STRUCTURE UNDERDRAIN | SU |
| STRUCTURE UNDERDRAIN COLLECTOR | SUC |
| SETTLED WATER | SW |
| SCRUBBER WATER RETURN | SWR |
| TRICKLING FILTER EFFLUENT | TFE |
| TRICKLING FILTER INFLUENT | TFI |
| TRICKLING FILTER RECYCLE | TFR |
| THICKENED SLUDGE | TSL |
| TREATED WATER | TW |
| UNDERDRAIN | UD |
| UTILITY WATER (NON-POTABLE WATER) | UW |
| VACUUM | V |
| VENT | VT |
| WASTE ACTIVATED SLUDGE | WAS |
| WASTE LUBE OIL | WLO |
| WASTE SECONDARY SLUDGE | WSS |

## VALVE ABBREVIATIONS

| | |
|---|---|
| GATE VALVE | VG |
| BALL VALVE | VB |
| BUTTERFLY VALVE | VF |
| CHECK VALVE | VC |
| DIAPHRAGM VALVE | VD |
| GLOBE VALVE | VO |
| NEEDLE VALVE | VN |
| PLUG VALVE | VP |
| SPECIALITY VALVES | VX |
| AIR RELEASE VALVE | ARV |
| FLOW CONTROL VALVE (ACTUATED; MODULATING) | FCV |
| FLOW VALVE (ACTUATED; ON / OFF) | FV |
| HAND (ISOLATION) VALVE | HV |
| PRESSURE REGULATING VALVE | PRV |
| PRESSURE SAFETY VALVE | PSV |
| SOLENOID VALVE | SOV |
| MUD VALVE | VM |
| MOTORIZED VALVE | MOV |
| LEVEL CONTROL VALVE | LCV |
| MOTORIZED GATE | MOG |

## EQUIPMENT ABBREVIATIONS

| | |
|---|---|
| AERATION BASIN | AB |
| AIR COMPRESSOR | AC |
| ACTIVATED CARBON FILTER | ACF |
| AERATOR | AER |
| AIR HANDLING UNIT | AHU |
| BLOWER | BLW |
| BRIDGE CRANE | BC |
| BAFFLE | BFL |
| BACKFLOW PREVENTER | BFP |
| BULK STORAGE TANK | BTK |
| CONDENSER | CD |
| CLEAN-IN-PLACE | CIP |
| CONDENSATE DRAIN | COND |
| CONVEYOR | CONV |
| DUMPSTER | DMP |
| ELECTRIC MOTOR OPERATOR/ACTUATOR | MOV |
| ELECTRIC UNIT HEATER | EHU |
| EXHAUST FAN | EXF |
| FAN | F |
| FILTER (GENERAL) | FLTR |
| AIRFLOW SENSOR | FS |
| GRANULAR ACTIVATED CARBON | GAC |
| GRIT CHAMBER | GCH |
| GRAVITY DAMPER | GD |
| GRAVITY FILTER | GF |
| GAS UNIT HEATER | GUH |
| GRIT WASHER / CLASSIFIER | GWC |
| HOSE BIB | HB |
| HOIST | HST |
| HEATER | HTR |
| INSTRUMENT AIR SUPPLY | IAS |
| LAMP MODULE | LM |
| LOUVER | LOU |
| MOTOR | M |
| MAKEUP AIR UNIT | MAU |
| MEMBRANE BIOREACTOR | MBR |
| MOTORIZED DAMPER | MD |
| MECHANICAL EQUIPMENT (GENERAL) | ME |
| MODULE | MOD |
| MIXER | MXR |
| ODOR CONTROL FAN | OCF |
| ODOR CONTROL SYSTEM | OCS |
| PUMP | P |
| SCRUBBER | SC |
| SCREW PRESS | SCP |
| SCREEN | SCR |
| SOFTENER | SFT |
| SLIDE / WEIR GATE | SG |
| SKIMMER | SKM |
| SAMPLER | SMP |
| SAMPLE PUMP | SP |
| STOP GATE | STG |
| STRAINER | STR |
| SUPPLY FAN | SUF |
| TANK | TNK |
| TURBINE | TRB |
| TRANSFER PUMP | TP |
| ULTRAVIOLET DISINFECTION | UV |
| VENT | V |
| VACUUM BREAKER | VB |
| WASHER COMPACTOR | WC |
| WATER HEATER | WH |
| WASH PRESS | WP |

## CONTROL EQUIPMENT ABBREVIATIONS

| | |
|---|---|
| ATMOSPHERE | ATM |
| AUTO TRANSFER CONTROLLER | ATC |
| CONTACT TIME | CT |
| CONTROL PANEL | CP |
| DISTRIBUTED CONTROL SYSTEM | DCS |
| DIRECT ONLINE STARTER | DOL |
| FAIL CLOSED | FC |
| FIBER OPTIC CABLE | FOC |
| FIBER OPTIC TRANSCEIVER | FOT |
| FULL VOLTAGE NON-REVERSING STARTER | FVNR |
| | |
| HUMAN MACHINE INTERFACE | HMI |
| LOCKED CLOSED | LC |
| LOCAL CONTROL PANEL | LCP |
| LOCAL CONTROL STATION | LCS |
| LOCKED OPEN | LO |
| LIGHTNING SURGE ARRESTOR | LSA |
| MOTOR CONTROL CENTER | MCC |
| MAIN CONTROL PANEL | MCP |
| MULTIMODE FIBER | MMF |
| MOTOR STARTER | MS |
| MOTOR | MTR |
| NOT APPLICABLE | N/A |
| NORMALLY CLOSED | NC |
| NOT IN CONTRACT | NIC |
| NORMALLY OPEN | NO |
| OPERATOR INTERFACE | OI |
| OPERATOR INTERFACE TERMINAL | OIT |
| | |
| PERSONAL COMPUTER | PC |
| PROGRAMMABLE LOGIC CONTROLLER | PLC |
| | |
| PLANT CONTROL NETWORK | PCN |
| | |
| POWER DISTRIBUTION UNIT | PDU |
| REMOTE I/O | RIO |
| REDUCED VOLTAGE SOLID-STATE STARTER | RVSS |
| FULL-VOLTAGE REVERSING | FVR |
| FULL-VOLTAGE NON-REVERSING | FVNR |
| | |
| REMOTE TERMINAL UNIT | RTU |
| SINGLE MODE FIBER | SMF |
| SOLID STATE METER | SSM |
| SHIELDED TWISTED PAIR | STP |
| THERMOCOUPLE | TC |
| UNINTERRUPTABLE POWER SUPPLY | UPS |
| | |
| UNSHIELDED TWISTED PAIR | UTP |
| VENDOR CONTROL PANEL | VCP |
| VARIABLE FREQUENCY DRIVE | VFD |
| VARIABLE SPEED DRIVE | VSD |


J-U-B ENGINEERS, INC.

J-U-B ENGINEERS, INC.
392. E. Winchester St., Suite 300
Salt Lake City, UT 84107
Phone: 801.547.0393
www.jub.com

Subconsultant:

Stantec

Stantec
2890 E Cottonwood Pkwy
Suite 300, Salt Lake City, Ut
84121
Tel: +1.801.617.3200
www.stantec.com


AGENCY

REVIEW


REUSE OF DRAWINGS:
J-U-B SHALL RETAIN ALL COMMON LAW, STATUTORY, COPYRIGHT AND OTHER RESERVED RIGHTS OF THESE DRAWINGS, AND THE SAME SHALL NOT BE REUSED WITHOUT J-U-B'S PRIOR WRITTEN CONSENT. ANY REUSE WITHOUT WRITTEN CONSENT BY J-U-B WILL BE AT CLIENT'S SOLE RISK AND WITHOUT LIABILITY OR LEGAL EXPOSURE TO J-U-B.


| NO. | DESCRIPTION | BY | APP'L | DATE |
|---|---|---|---|---|
| | REVISION | | | |

SPANISH FORK & MAPELTON WRF
SPANISH FORK CITY CORPORATION

INSTRUMENTATION AND CONTROL
SYMBOLS AND NOMENCLATURE - IV

FILE : 55-20-124_00I-004
JUB PROJ. # : 55-20-124
DRAWN BY: VBK
DESIGN BY: BH
CHECKED BY: SR
ONE INCH
AT FULL SIZE, IF NOT ONE INCH, SCALE ACCORDINGLY
LAST UPDATED: 6/30/2022

DRAWING:
00-I-004

SHEET: 477 OF 691


Plot Date:6/30/2022 8:02 PM Plotted By:-Pinnaduwa-Hewage, Ranga
Date Created:4/29/2021 C:\PLANTCACHE\181301139_SPNSH FRK MAPLTN WRF DESIGN\PID DWG\55-20-124_00I-004.DWG

| FIELD | | CONTROL PANEL |
|---|---|---|
| FIELD DEVICE | FIELD JUNCTION BOX | |

## SAMPLE ANALOG INSTRUMENT WIRING DIAGRAM (HARDWIRE)

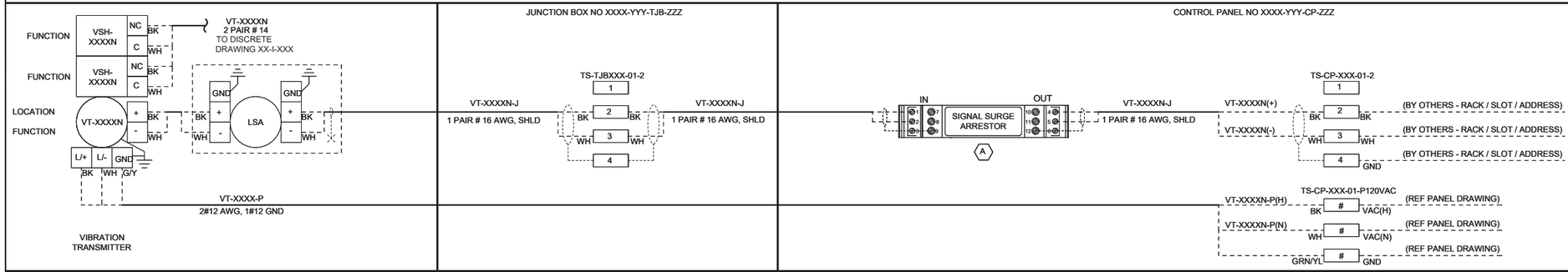


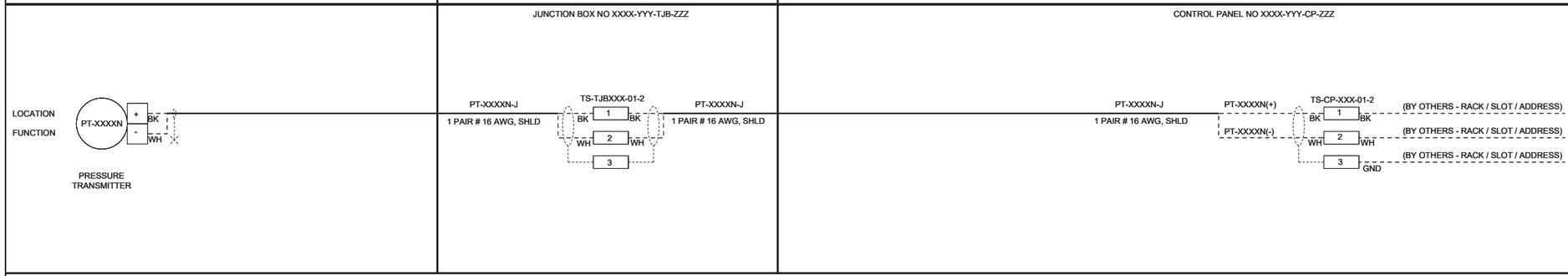


## LEGENDS

### SIGNAL CABLE / CONDUCTOR LABEL

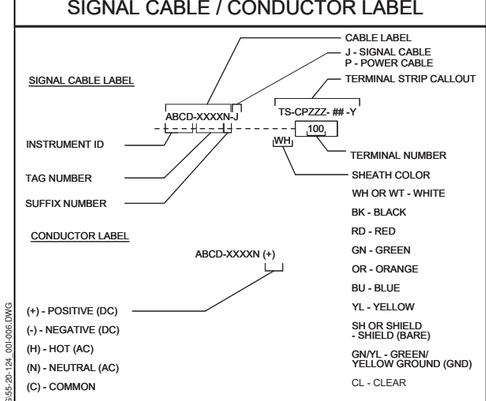


### PANEL AND TERMINAL STRIP LABEL

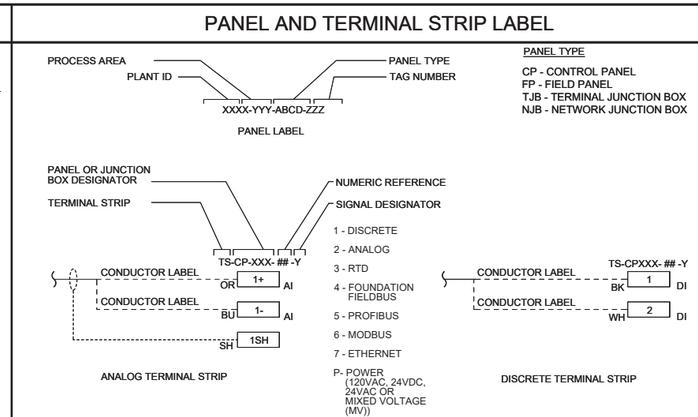


### MISCELLANEOUS SYMBOLS

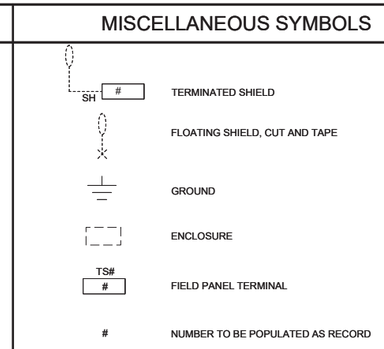


### WIRING DIAGRAM LINE SYMBOLOGY

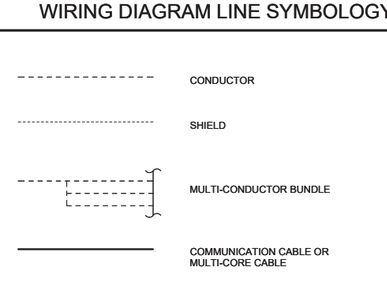


## GENERAL SHEET NOTES

1. WIRING INTERNAL TO THE CONTROL PANEL (BETWEEN THE FIELD TERMINALS AND THE CONTROLLER), SHALL BE FURNISHED, INSTALLED, TERMINATED, LABELED, AND TESTED BY THE CONTROL PANEL SUPPLIER. CONTROL PANEL SUPPLIER SHALL ALSO POPULATE THE RACK / SLOT / ADDRESS OF EACH POINT.
2. SHEATH CUTBACK TO BE MINIMIZED WHERE APPLICABLE.
3. CABLES SHALL HAVE APPROVED CABLE MARKERS AT BOTH ENDS, TAGGED AS SHOWN.
4. REFER TO SPECIFICATION SECTION 26_05_19 FOR CABLE AND WIRING GUIDELINES.
5. CABLE SHIELD AND OVERALL SHIELD TO BE CUT BACK AND TAPED IN THE FIELD.
6. INTERNAL JUNCTION BOX WIRES SHALL BE FERRULED AND LABELED IN ACCORDANCE WITH DIVISION 26 SPECIFICATIONS.
7. SPARE CONDUCTORS SHALL BE TERMINATED AND LABELED AS SPARE.

## SHEET KEYNOTES

A. REFER TO SPECIFICATION SECTION 40_91_00 FOR LIGHTNING AND SURGE ARRESTOR SUPPLY REQUIREMENTS.


J-U-B ENGINEERS, INC.

J-U-B ENGINEERS, INC.
392. E. Winchester St., Suite 300
Salt Lake City, UT 84107
Phone: 801.547.0393
www.jub.com

Subconsultant:

Stantec
Stantec
2890 E Cottonwood Pkwy
Suite 300, Salt Lake City, Ut
84121
Tel: +1.801.617.3200
www.stantec.com


AGENCY

REVIEW


REUSE OF DRAWINGS
J-U-B SHALL RETAIN ALL COMMON LAW, STATUTORY, COPYRIGHT AND OTHER RESERVED RIGHTS OF THESE DRAWINGS, AND THE SAME SHALL NOT BE REUSED WITHOUT J-U-B'S PRIOR WRITTEN CONSENT. ANY REUSE WITHOUT WRITTEN CONSENT BY J-U-B WILL BE AT CLIENTS SOLE RISK AND WITHOUT LIABILITY TO J-U-B. CLIENT SHALL DEFEND, INDEMNIFY AND HOLD J-U-B HARMLESS FROM ALL CLAIMS, DAMAGES, AND EXPENSES ARISING OUT OF SUCH REUSE.


| NO. | DESCRIPTION | BY | APP'L | DATE |
|---|---|---|---|---|
| | REVISION | | | |

SPANISH FORK & MAPELTON WRF
SPANISH FORK CITY CORPORATION

INSTRUMENTATION AND CONTROL
SAMPLE WIRING DIAGRAM - I

FILE : 55-20-124_00I-006
JUB PROJ. # : 55-20-124
DRAWN BY: VBK
DESIGN BY: BH
CHECKED BY: SR

ONE INCH
AT FULL SIZE, IF NOT ONE INCH, SCALE ACCORDINGLY

LAST UPDATED: 6/30/2022

DRAWING:
00-I-006

SHEET: 478 OF 691


Plot Date:6/30/2022 8:02 PM Plotted By: Pinnaduwa Hewage, Ranga
Date Created:4/29/2021 C:\PLANTCACHE\181301159_SPNSH FRK MAPLTN WRF DESIGN\PID DWG\55-20-124_00I006.DWG

## SAMPLE DISCRETE INSTRUMENT WIRING DIAGRAM (HARDWIRE INTRINSICALLY SAFE )

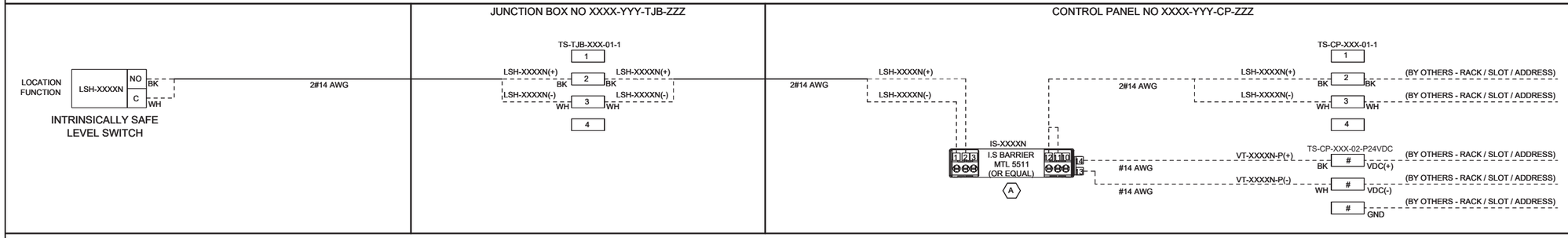


## SAMPLE DISCRETE INSTRUMENT WIRING DIAGRAM (HARDWIRE)

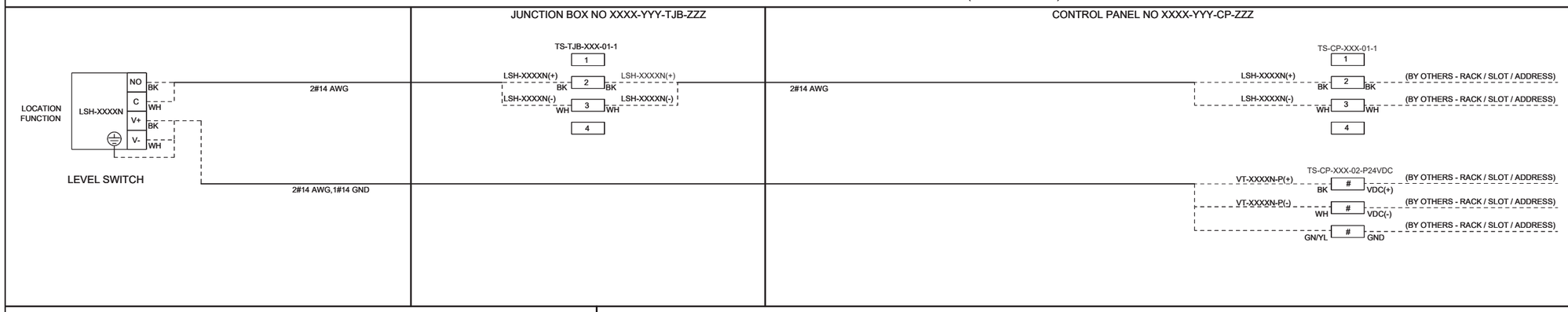


## SAMPLE WIRING DIAGRAM (ETHERNET)

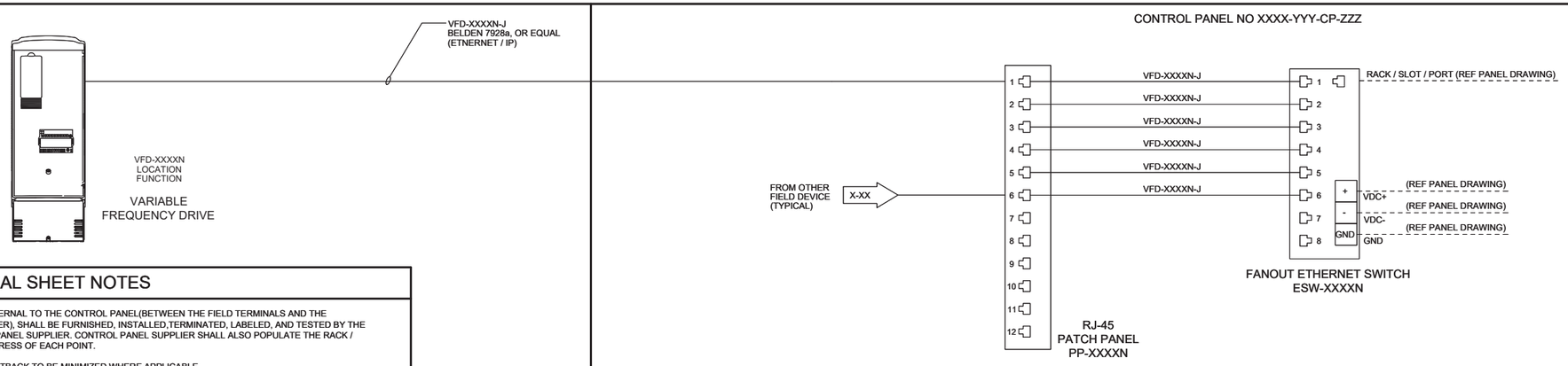


## GENERAL SHEET NOTES

1. WIRING INTERNAL TO THE CONTROL PANEL(BETWEEN THE FIELD TERMINALS AND THE CONTROLLER), SHALL BE FURNISHED, INSTALLED,TERMINATED, LABELED, AND TESTED BY THE CONTROL PANEL SUPPLIER. CONTROL PANEL SUPPLIER SHALL ALSO POPULATE THE RACK / SLOT / ADDRESS OF EACH POINT.
2. SHEATH CUTBACK TO BE MINIMIZED WHERE APPLICABLE.
3. CABLES SHALL HAVE APPROVED CABLE MARKERS AT BOTH ENDS, TAGGED AS SHOWN.
4. REFER TO SPECIFICATION SECTION 26_05_19 FOR CABLE AND WIRING GUIDELINES.
5. INTERNAL JUNCTION BOX WIRES SHALL BE FERRULED AND LABELED IN ACCORDANCE WITH DIVISION 26 SPECIFICATIONS.
6. SPARE CONDUCTORS SHALL BE TERMINATED AND LABELED AS SPARE.

## SHEET KEYNOTES

A. REFER TO SPECIFICATION SECTION 40_95_10 FOR INTRINSICALLY SAFE BARRIER SUPPLY REQUIREMENTS.


J-U-B ENGINEERS, INC.
J-U-B ENGINEERS, INC.
392. E. Winchester St., Suite 300
Salt Lake City, UT 84107
Phone: 801.547.0393
www.jub.com

Subconsultant:
Stantec
Stantec
2890 E Cottonwood Pkwy
Suite 300, Salt Lake City, Ut 84121
Tel: +1.801.617.3200
www.stantec.com


AGENCY

REVIEW


REUSE OF DRAWINGS
J-U-B SHALL RETAIN ALL COMMON LAW, STATUTORY, COPYRIGHT AND OTHER RESERVED RIGHTS OF THESE DRAWINGS, AND THE SAME SHALL NOT BE REUSED WITHOUT J-U-B'S PRIOR WRITTEN CONSENT. ANY REUSE WITHOUT WRITTEN CONSENT BY J-U-B WILL BE AT CLIENTS SOLE RISK AND WITHOUT LIABILITY OR LEGAL EXPOSURE TO J-U-B.


| NO. | DESCRIPTION | BY (APP.) | DATE |
|---|---|---|---|
| | REVISION | | |

SPANISH FORK & MAPELTON WRF
SPANISH FORK CITY CORPORATION

INSTRUMENTATION AND CONTROL
SAMPLE WIRING DIAGRAM - II

FILE : 55-20-124_00I-007
JUB PROJ. # : 55-20-124
DRAWN BY: VBK
DESIGN BY: BH
CHECKED BY: SR
ONE INCH
AT FULL SIZE, IF NOT ONE INCH, SCALE ACCORDINGLY
LAST UPDATED: 6/30/2022

DRAWING:
00-I-007

SHEET: 479 OF 691


Plot Date:6/30/2022 8:03 PM Plotted By: Pinnaduwa Hewage, Ranga
Date Created:4/29/2021 C:\PLANTCACHE\181301159_SPNSH FRK MAPLTN WRF DESIGN\PID DWG\55-20-124_00I-007.DWG

## SHEET KEYNOTES

A. RACK-MOUNTED PRIMARY WIN 2012 STANDARD R2 (64-BIT) FACTOR TALK SE SCADA SERVER. SERVER SHALL BE EQUIPPED WITH (1) DUAL-PORT 10/100/1000 BASE-T AUTOSENSING NETWORK INTERFACE CARD. THE TWO PORTS SHALL BE TEAMED FOR FAST ETHER-CHANNEL SERVICE USING A LINK AGGREGATION CONFIGURATION.

B. ETHERNET READY MASTER POWERSWITCH WITH (12) 120V OUTLETS MINIMUM.

C. 15 PORT (MIN.) MEDIA CONVERTER CHASSIS WITH REDUNDANT POWER SUPPLIES. UNITS SHALL BE POPULATED WITH SUFFICIENT FIBER TO UTP TRANSCEIVERS TO ACCOMMODATE ALL FIBER RUNS PLUS TWO SPARE. FIBER TRANSCEIVERS SUPPLIED SHALL INCLUDE 10BASE-FL TO 10BASE-T AND 100BASE-TX TO 100BASE-FX TO BE USED AS NODE COMMUNICATION SPEEDS DICTATE.

D. CISCO 3850 SERIES CATALYST 24-PORT 10/100/1000 BASE-T STACKABLE ETHERNET SWITCH WITH GIGABIT UPLINK MODULE.

E REFER TO SECTION 409510 FOR ETHERNET SWITCH REDUNDANT STACKING REQUIREMENTS

P. VPN MODEM - FURNISHED, INSTALLED (WALL-MOUNTED) AND CONFIGURED BY OWNER VPN SERVICE PROVIDER.

J. TOWER UPS WITH MODBUS RTU COMMUNICATION INTERFACE (INCLUDING INTEGRAL PASSIVE TERMINATOR) SHALL SUPPORT ALL CONTROL ROOM EQUIPMENT (WITH THE EXCEPTION OF CONSOLE LASER PRINTER) PLUS ALL FIELD PANELS SHOWN. SIZE UPS SUPPLY POWER BREAKER PER MANUFACTURER'S RECOMMENDATION. UPS SHALL BE SIZED TO SUPPORT FULL LOAD ON BATTERY POWER FOR A MINIMUM TIME PERIOD OF 60 MINUTES.

K. FIBER PATCH PANEL.

TO VPN SERVICE PROVIDER NETWORK

RACKMOUNTED FIBER CROSS-CONNECT CABINET
LEVITON RJ-45 PATCH PANEL (24 PORT)
WIRE MANAGEMENT
30-NET-1000 CONTROL SYSTEM SERVER AND COMMUNICATION CABINET

ETHERNET SWITCH PCN
AB CONTROL LOGIX PLC
PS1
PS2
UTP
ETHERNET SWITCH VFD ODD
ETHERNET SWITCH VFD EVEN
CPP
30-MCP-1000 PLANT MCP

DUAL SCREEN WORKSTATION
TOWER UPS
MBR SUPPORT BUILDING CONTROL ROOM

2PR

ETHERNET SWITCH PCN
OPERATOR INTERFACE
AB CONTROLLOGIX PLC
50-VCP-1000 UV SYSTEM VCP

ETHERNET SWITCH PCN
OPERATOR INTERFACE
AB CONTROLLOGIX PLC
ETHERNET SWITCH VFD/DOL
50-LCP-1000 UV BUILDING LCP
TOWER UPS
00-I-XXX TO XXX
UV BUILDING

AB MICROLOGIX 1400 PLC PROCESSOR
10-VCP-5000 ODOR CONTROL VCP

AB MICROLOGIX 1400 PLC PROCESSOR
10-VCP-2120 COARSE SCREENINGS LODOR VCP

AB MICROLOGIX 1400 PLC PROCESSOR
10-VCP-4120 FINE SCREENINGS LODOR VCP

CPP
FPP
FO — FO — FO
ETHERNET SWITCH PCN
ETHERNET SWITCH VFD/DOL
10-LCP-1000 HEADWORKS LCP

TOWER UPS
THIN CLIENT WORKSTATION

HEADWORKS BUILDING

10-VFD-3105 HW LIFT STATION PUMP NO.1
10-VFD-3205 HW LIFT STATION PUMP NO.2
10-VFD-3305 HW LIFT STATION PUMP NO.3
10-VFD-3405 HW LIFT STATION PUMP NO.4

SEE DWG 00-I-602 FOR ADDITIONAL DETAILS
10 -VCP-1000 COARSE SCREENINGS VCP

SEE DWG 00-I-602 FOR ADDITIONAL DETAILS
10-VCP-2000 GRIT SYSTEM VCP

SEE DWG 00-I-602 FOR ADDITIONAL DETAILS
10 -VCP-3000 FINE SCREENINGS VCP

HEADWORKS BUILDING

MBR SUPPORT BUILDING

SEE DWG 00-I-603 FOR ADDITIONAL DETAILS
20-VCP-1000 MASTER BLOWER SYSTEM VCP

SEE DWG 00-I-604 FOR ADDITIONAL DETAILS
30-VCP-1000 MASTER MBR SYSTEM VCP


J-U-B ENGINEERS, INC.
J-U-B ENGINEERS, INC.
392. E. Winchester St., Suite 300
Salt Lake City, UT 84107
Phone: 801.547.0393
www.jub.com

Subconsultant:
Stantec
Stantec
2890 E Cottonwood Pkwy
Suite 300, Salt Lake City, Ut 84121
Tel: +1.801.617.3200
www.stantec.com


AGENCY

REVIEW

| NO. | DESCRIPTION | BY | APR. | DATE |
|---|---|---|---|---|
| | REVISION | | | |


REUSE OF DRAWINGS
J-U-B SHALL RETAIN ALL COMMON LAW STATUTORY, COPYRIGHT AND OTHER RESERVED RIGHTS OF THESE DRAWINGS, AND THE SAME SHALL NOT BE REUSED WITHOUT J-U-B'S PRIOR WRITTEN CONSENT. ANY REUSE WITHOUT WRITTEN CONSENT BY J-U-B WILL BE AT CLIENTS SOLE RISK AND WITHOUT LIABILITY OR LEGAL EXPOSURE TO J-U-B.


SPANISH FORK & MAPELTON WRF
SPANISH FORK CITY CORPORATION

INSTRUMENTATION AND CONTROL
NETWORK BLOCK DIAGRAM

FILE : 55-20-124_001-601
JUB PROJ. # : 55-20-124
DRAWN BY: VBK
DESIGN BY: BH
CHECKED BY: SR
ONE INCH
AT FULL SIZE, IF NOT ONE INCH, SCALE ACCORDINGLY
LAST UPDATED: 6/30/2022

DRAWING:
00-I-601

SHEET: 480 OF 691


Plot Date:6/30/2022 8:03 PM Plotted By: Pimaduwa-Hewage, Ranga
Date Created:5/15/2021 C:\PLANTCACHE\181301139_SPNSH FRK MAPLTN WRF DESIGN\PID DWG\55-20-124_001-601.DWG

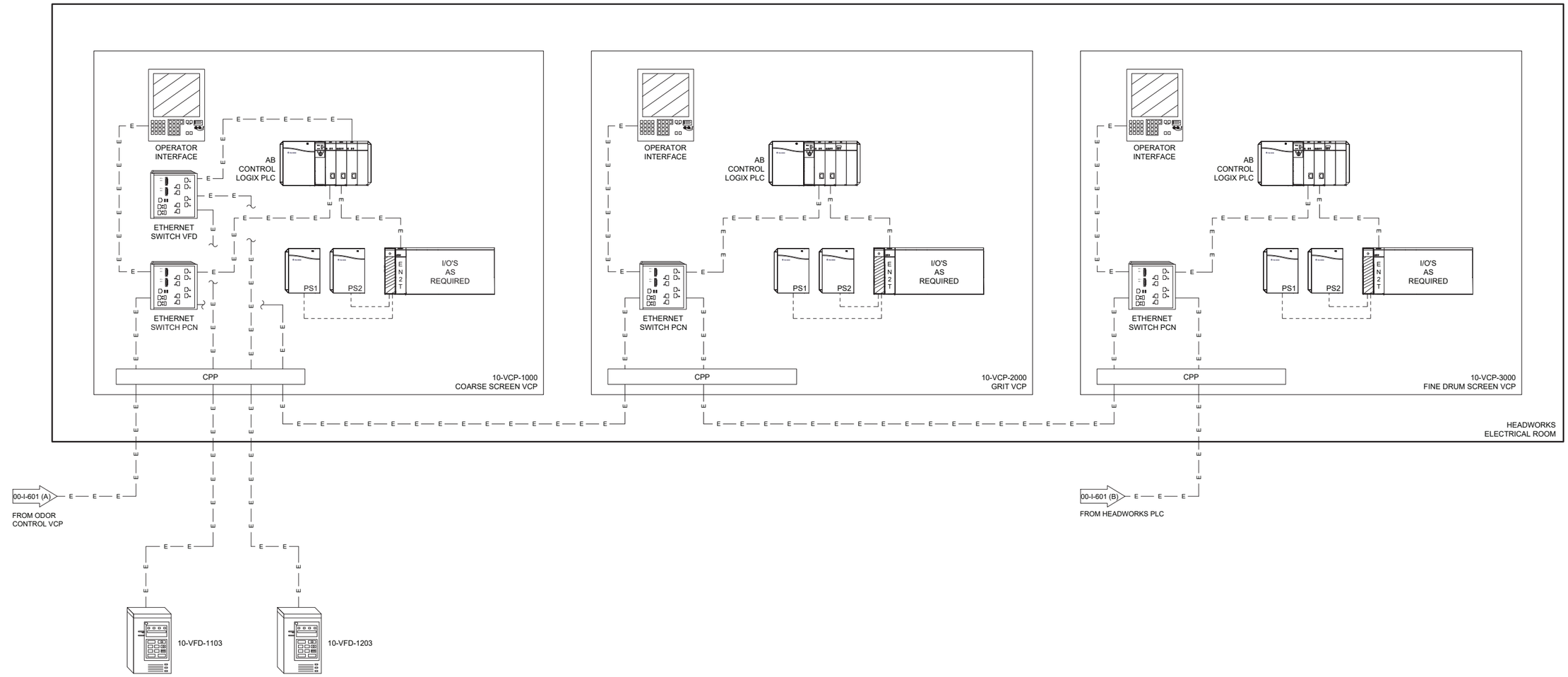


J-U-B ENGINEERS, INC.

J-U-B ENGINEERS, INC.
392. E. Winchester St., Suite 300
Salt Lake City, UT 84107
Phone: 801.547.0393
www.jub.com

Subconsultant:

Stantec

Stantec
2890 E Cottonwood Pkwy
Suite 300, Salt Lake City, Ut
84121
Tel: +1.801.617.3200
www.stantec.com

AGENCY

REVIEW

REUSE OF DRAWINGS
J-U-B SHALL RETAIN ALL COMMON LAW, STATUTORY, COPYRIGHT AND OTHER RESERVED RIGHTS OF THESE DRAWINGS, AND THE SAME SHALL NOT BE REUSED WITHOUT J-U-B'S PRIOR WRITTEN CONSENT. ANY REUSE WITHOUT WRITTEN CONSENT BY J-U-B WILL BE AT CLIENTS SOLE RISK AND WITHOUT LIABILITY OR LEGAL EXPOSURE TO J-U-B.

| NO. | DESCRIPTION | BY | APP. | DATE |
|---|---|---|---|---|
| | REVISION | | | |

SPANISH FORK & MAPELTON WRF
SPANISH FORK CITY CORPORATION

INSTRUMENTATION AND CONTROL
HEADWORKS NETWORK BLOCK DIAGRAM

FILE : 55-20-124_001-602
JUB PROJ. # : 55-20-124
DRAWN BY: VBK
DESIGN BY: BH
CHECKED BY: SR

ONE INCH
AT FULL SIZE, IF NOT ONE INCH, SCALE ACCORDINGLY

LAST UPDATED: 6/30/2022

DRAWING:
00-I-602

SHEET: 481 OF 691

Plot Date:6/30/2022 8:03 PM Plotted By: Pinnaduwa-Hewage, Ranga
Date Created:5/26/2021 C:\PLANTCACHE\181301139_SPNSH FRK MAPLTN WRF DESIGN\PID DWG\55-20-124_001-602.DWG

## GENERAL SHEET NOTES

1. REFER TO SECTION 40 95 10 FOR VENDOR CONTROL PANEL HARDWIRE DETAILS.
2. BLOWER MASTER VENDOR CONTROL PANEL IS PROVIDED BY THE VENDOR AND INSTALLED BY THE CONTRACTOR.

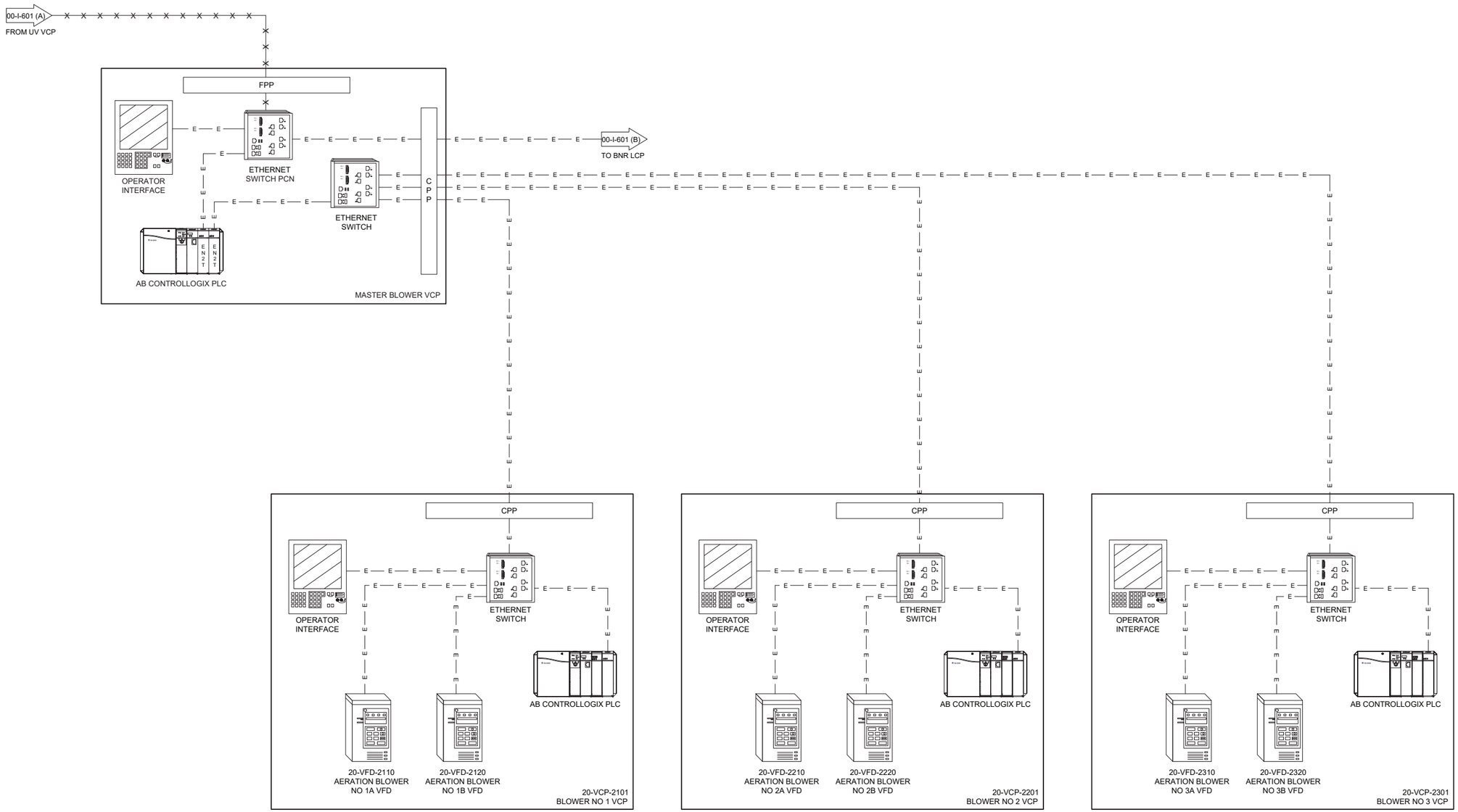



J-U-B ENGINEERS, INC.

J-U-B ENGINEERS, INC.
392 E. Winchester St., Suite 300
Salt Lake City, UT 84107
Phone: 801.547.0393
www.jub.com

Subconsultant:

Stantec
Stantec
2890 E Cottonwood Pkwy
Suite 300, Salt Lake City, Ut 84121
Tel: +1.801.617.3200
www.stantec.com


AGENCY

REVIEW


REUSE OF DRAWINGS
J-U-B SHALL RETAIN ALL COMMON LAW, STATUTORY, COPYRIGHT AND OTHER RESERVED RIGHTS OF THESE DRAWINGS, AND THE SAME SHALL NOT BE REUSED WITHOUT J-U-B'S PRIOR WRITTEN CONSENT. ANY REUSE WITHOUT WRITTEN CONSENT BY J-U-B WILL BE AT CLIENTS SOLE RISK AND WITHOUT LIABILITY OR LEGAL EXPOSURE TO J-U-B.


| NO. | DESCRIPTION | BY | APR. | DATE |
|---|---|---|---|---|
| | REVISION | | | |

SPANISH FORK & MAPELTON WRF
SPANISH FORK CITY CORPORATION

INSTRUMENTATION AND CONTROL
AERATION BLOWERS NETWORK BLOCK DIAGRAM

FILE : 55-20-124_00I-603
JUB PROJ. # : 55-20-124
DRAWN BY: VBK
DESIGN BY: BH
CHECKED BY: SR

ONE INCH
AT FULL SIZE, IF NOT ONE INCH, SCALE ACCORDINGLY

LAST UPDATED: 6/30/2022

DRAWING:
00-I-603

SHEET: 482 OF 691


Plot Date:6/30/2022 8:03 PM Plotted By: Pinnaduwa-Hewage, Ranga
Date Created:5/26/2021 C:\PLANTCACHE\181301139_SPNISH FRK MAPLTN WRF DESIGN\PID DWG\55-20-124_00I-603.DWG

00-I-601 (B)
TO BNR LCP
4-UTP
00-I-601 (A)
FROM HEADWORKS
4-PR
C P P
F P P
ETHERNET SWITCH PCN
AB CONTROL LOGIX PLC
AB CONTROL LOGIX PLC
VFD ODD
ETHERNET SWITCH NO 1
VFD EVEN
ETHERNET SWITCH NO 2
OPERATOR INTERFACE
PS1
PS2
E N 2 T R
E N 2 T
I/O'S AS REQUIRED
ETAP
30-RIO-1004 MBR CHEM RIO
RIO ODD
ETHERNET SWITCH NO 4
RIO EVEN
ETHERNET SWITCH NO 3
CPP
30-VCP-1000 MBR SYSTEM MASTER VCP
10 UTP
1 UTP
8 UTP
3 UTP
6 UTP
4 UTP
35-VFD-5110 CITRIC DOSING PUMP NO 1 VFD
35-VFD-3101 MBR SYSTEM NO 1 RAS PUMP VFD
35-VFD-3301 MBR SYSTEM NO 3 RAS PUMP VFD
35-VFD-5210 SODIUM HYPOCHLORITE PUMP NO 1 VFD
35-VFD-1105 MBR SYSTEM NO 1 PERMEATE / BACKWASH PUMP VFD
35-VFD-1305 MBR SYSTEM NO 3 PERMEATE / BACKWASH PUMP VFD
35-VFD-1505 MBR SYSTEM NO 5 PERMEATE / BACKWASH PUMP VFD
35-VFD-2101 MBR SYSTEM NO 1 SCOUR AIR BLOWER VFD
35-VFD-2301 MBR SYSTEM NO 3 SCOUR AIR BLOWER VFD
35-VFD-2501 MBR SYSTEM NO 5 SCOUR AIR BLOWER VFD
COPPER PATCH PANEL ENCLOSURE (BY THE CM/GC)
35-VFD-3201 MBR SYSTEM NO 2 RAS PUMP VFD
35-VFD-5220 SODIUM HYPOCHLORITE PUMP NO 2 VFD
35-VFD-1205 MBR SYSTEM NO 2 PERMEATE / BACKWASH PUMP VFD
35-VFD-1405 MBR SYSTEM NO 4 PERMEATE / BACKWASH PUMP VFD
35-VFD-1605 MBR SYSTEM NO 6 PERMEATE / BACKWASH PUMP VFD
35-VFD-2201 MBR SYSTEM NO 2 SCOUR AIR BLOWER VFD
35-VFD-2401 MBR SYSTEM NO 4 SCOUR AIR BLOWER VFD
35-VFD-5120 CITRIC DOSING PUMP NO 2 VFD
MBR SUPPORT BUILDING ELECTRICAL ROOM
ETAP2F
MBR NO 1 RIO
MBR NO 2 RIO
MBR NO 3 RIO
MBR NO 4 RIO
MBR NO 5 RIO
MBR NO 6 RIO
30-RIO-1001 MBR RIO NO 1
30-RIO-1002 MBR RIO NO 2
30-RIO-1003 MBR RIO NO 3
MBR SUPPORT BUILDING PROCESS ROOM


J-U-B ENGINEERS, INC.
J-U-B ENGINEERS, INC.
392. E. Winchester St., Suite 300
Salt Lake City, UT 84107
Phone: 801.547.0393
www.jub.com

Subconsultant:
Stantec
Stantec
2890 E Cottonwood Pkwy
Suite 300, Salt Lake City, Ut 84121
Tel: +1.801.617.3200
www.stantec.com


AGENCY

REVIEW


REUSE OF DRAWINGS
J-U-B SHALL RETAIN ALL COMMON LAW, STATUTORY, COPYRIGHT AND OTHER RESERVED RIGHTS OF THESE DRAWINGS, AND THE SAME SHALL NOT BE REUSED WITHOUT J-U-B'S PRIOR WRITTEN CONSENT. ANY REUSE WITHOUT WRITTEN CONSENT BY J-U-B WILL BE AT CLIENTS SOLE RISK AND WITHOUT LIABILITY OR LEGAL EXPOSURE TO J-U-B.


| NO. | DESCRIPTION | BY | APR. | DATE |
|---|---|---|---|---|
| | REVISION | | | |

SPANISH FORK & MAPELTON WRF
SPANISH FORK CITY CORPORATION

INSTRUMENTATION AND CONTROL
MBR NETWORK BLOCK DIAGRAM

FILE : 55-20-124_001-604
JUB PROJ. # : 55-20-124
DRAWN BY: VBK
DESIGN BY: BH
CHECKED BY: SR
ONE INCH
AT FULL SIZE, IF NOT ONE INCH, SCALE ACCORDINGLY
LAST UPDATED: 6/30/2022

DRAWING:
00-I-604

SHEET: 483 OF 691


Plot Date:6/30/2022 8:03 PM Plotted By: Pinnaduwa-Hewage, Ranga
Date Created:8/12/2021 C:\PLANTCACHE\18130\139_SPNSH FRK MAPLTN WRF DESIGN\PID DWG\55-20-124_001-604.DWG

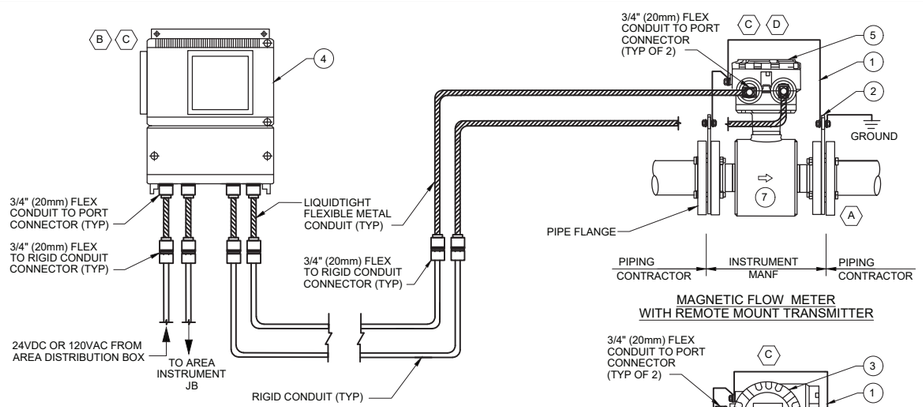


MAGNETIC FLOW METER
WITH REMOTE MOUNT TRANSMITTER

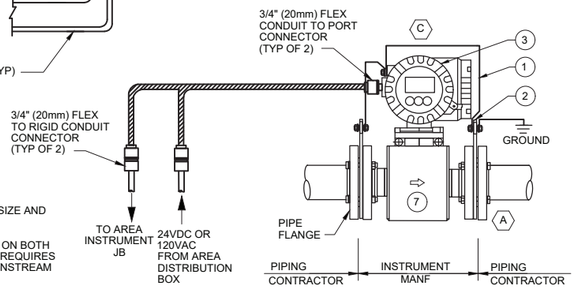


MAGNETIC FLOW METER
WITH INTEGRAL TRANSMITTER

GENERAL NOTES:

1. REFER TO P&IDS AND DATA SHEETS FOR PROCESS PIPING SIZE AND MATERIAL.
2. BIDIRECTIONAL APPLICATION REQUIRES 5 PIPE DIAMETERS ON BOTH SIDES OF METER, MINIMUM. UNIDIRECTIONAL APPLICATION REQUIRES 5 PIPE DIAMETERS UPSTREAM AND 2 PIPE DIAMETERS DOWNSTREAM WITH STABLE PROCESS CONDUCTIVITY.
3. WETTED MATERIALS SHALL BE CHEMICALLY INERT TO THE PROCESS.
4. INSTALLATION OF MATING FLANGES WITH THE FLOW METER SHALL BE CARRIED OUT IN COOPERATION WITH THE PIPING CONTRACTOR USING UPSTREAM AND DOWNSTREAM PIPE REDUCERS AS NECESSARY.
5. PROVIDE MECHANICAL SUPPORT FOR ROUTED CONDUIT.
6. REFER TO DIVISION 26 SPECIFICATIONS FOR FLEX AND RIGID CONDUIT MATERIAL AND USAGE LIMITATIONS.

⬡ KEYNOTES:

A. GROUNDING RINGS REQUIRED FOR METALLIC AND NON-METALLIC PIPE INSTALLATIONS TO SUPPORT PROPER SOLUTION GROUNDING AND / OR LINING PROTECTION.

B. WALL OR INSTRUMENT-STAND MOUNT PER DETAIL I-948.

C. CONFIGURE FOR EMPTY PIPE DETECTION.

D. WHERE TEMPORARY SUBMERGENCE IS POSSIBLE, ELECTRONIC HOUSING SHALL BE POTTED AND SEALED BY MANUFACTURER PRIOR TO SHIPPING TO SITE.

E. CONTRACTOR TO ISOLATE METER FROM THE PIPELINE USING ISOLATION WASHERS AND SLEEVES ON FLANGE BOLTS.

F. 316 SS OR HASTELLOY C PREFERRED. HOWEVER ENGINEER APPROVED FINAL SELECTION BASED ON MATERIAL CHEMICAL COMPATIBILITY.

G. SELECTED GROUNDING RING MATERIAL TO MATCH MEASURING ELECTRODE MATERIAL.

H. FOR INSTALLATION WITHIN CATHODIC PROTECTION SYSTEMS, USE NON-METALLIC LIQUIDTIGHT FLEXIBLE CONDUIT.

J. DISCONNECT COIL SIGNAL SHIELD WIRE AT THE REMOTE TRANSMITTER.

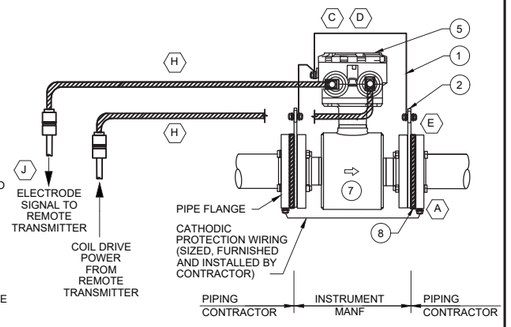


MAGNETIC FLOW METER
WITH REMOTE MOUNT TRANSMITTER
(FOR CATHODIC PIPE PROTECTION APPLICATION)

BILL OF MATERIALS

| ITEM | QTY | DESCRIPTION | SUPPLY | MATERIAL/RATING (WATER) | MATERIAL/RATING (CHEMICAL) |
|---|---|---|---|---|---|
| 1 | 1 | AWG # 8 GROUNDING CONDUCTOR TO GROUND GRID | CONT | COPPER | COPPER |
| 2 | 2 | GROUNDING RING | MANF | 316 SS ⬡ G | 316 SS OR HASTELLOY C ⬡ G |
| 3 | 1 | INTEGRAL TRANSMITTER WITH DISPLAY AND DUAL CONDUIT PORTS | MANF | POWDER COATED ALUMINUM | POWDER COATED ALUMINUM |
| 4 | 1 | REMOTE TRANSMITTER WITH DISPLAY | MANF | POWDER COATED ALUMINUM | POWDER COATED ALUMINUM |
| 5 | 1 | METER REMOTE WIRE HOUSING FOR REMOTE TRANSMITTER WITH DUAL CONDUIT PORTS | MANF | POWDER COATED ALUMINUM | POWDER COATED ALUMINUM |
| 6 | 1 EACH | COIL DRIVE AND ELECTRODE SIGNAL CABLES (SEPARATE CABLES; LENGTH AS REQUIRED) | CONT | PER MANF SPEC | PER MANF SPEC |
| 7 | - | METER MEASURING TUBE / FLANGES (LINER PER MANF RECOMMENDATION) | MANF | 304 SS | ⬡ F |
| 8 | 2 | INSULATING GASKET | CONT | EPDM / NEOPRENE | EPDM / NEOPRENE |

I-101 MAGNETIC FLOW METER
REV 010119

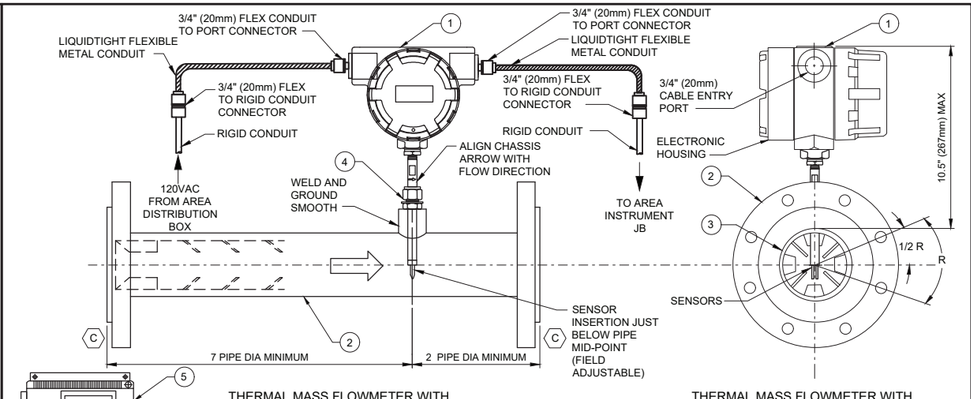


THERMAL MASS FLOWMETER WITH
INTEGRAL TRANSMITTER AND FLOW CONDITIONER
(SIDE VIEW)

THERMAL MASS FLOWMETER REMOTE
TRANSMITTER (SIDE VIEW)




THERMAL MASS FLOWMETER WITH
INTEGRAL TRANSMITTER AND FLOW CONDITIONER
(INLINE VIEW)

THERMAL MASS FLOWMETER REMOTE
TRANSMITTER (INLINE VIEW)

GENERAL NOTES:

1. PROVIDE MECHANICAL SUPPORT FOR ROUTED CONDUIT.
2. REFER TO P&IDS AND DATA SHEETS FOR PROCESS PIPING SIZE AND MATERIAL.
3. INSTALLATION OF FLANGED ELEMENTS SHALL BE CARRIED OUT IN COOPERATION WITH THE PIPING CONTRACTOR WITH ISOLATION OF DISSIMILAR MATERIALS ACCOMMODATED AS NECESSARY.
4. WETTED MATERIALS SHALL BE CHEMICALLY INERT TO THE PROCESS.
5. REFER TO DIVISION 26 SPECIFICATIONS FOR FLEX AND RIGID CONDUIT MATERIAL AND USAGE LIMITATIONS.
6. ENSURE INSTALLED PROBE AND ELECTRONICS ARE A VENDOR MATCHED PAIR.
7. APPLY SEALANT TO MALE THREADS.

⬡ KEYNOTES:

A. 316 SS OR NON-METALLIC MATERIAL PREFERRED. HOWEVER ENGINEER APPROVED FINAL SELECTION BASED ON SYSTEM PRESSURES AND MATERIAL CHEMICAL COMPATIBILITY.

B. IF FLOW CONDITIONING TUBE IS NOT USED, METER MUST BE INSTALLED WITH A MINIMUM OF 15 STRAIGHT PIPE DIAMETERS UPSTREAM AND 5 DOWNSTREAM FOR LINE SIZES OF 6-INCHES OR GREATER. FOR LINE SIZES LESS THAN 6-INCHES, A MINIMUM OF 20 DIAMETERS UPSTREAM AND 9 DOWNSTREAM ARE REQUIRED.

C. MATING FLANGE GASKETS FURNISHED AND INSTALLED BY CONTRACTOR.

D. WALL OR INSTRUMENT-STAND MOUNT PER DETAIL I-701.

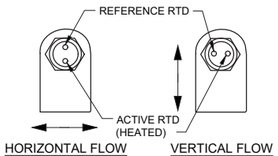


SENSOR ORIENTATION
(TOP VIEW)

BILL OF MATERIALS

| ITEM | QTY | DESCRIPTION | SUPPLY | MATERIAL/RATING (WATER) | MATERIAL/RATING (CHEMICAL) |
|---|---|---|---|---|---|
| 1 | 1 | THERMAL MASS FLOWMETER HOUSING | MANF | EPOXY COATED ALUMINUM | EPOXY COATED ALUMINUM |
| 2 | 1 | FLANGED FLOW CONDITIONING TUBE WITH INTEGRAL STRAIGHTENING VEINS ⬡ C | MANF | ⬡ A | ⬡ A |
| 3 | 1 | FLOW MEASURING ELEMENT (WETTED PARTS) | MANF | 316 SS | 316 SS OR HASTELLOY C |
| 4 | 1 | 3/4" (20mm) NPT PROCESS CONNECTION WITH ADJUSTABLE TEFLON FERRULE. | MANF | 316 SS | 316 SS |
| 5 | 1 | REMOTE TRANSMITTER WITH DISPLAY | MANF | POWDER COATED ALUMINUM | POWDER COATED ALUMINUM |

I-102 THERMAL MASS FLOWMETER
REV 010119

J-U-B ENGINEERS, INC.
J-U-B ENGINEERS, INC.
392 E. Winchester St., Suite 300
Salt Lake City, UT 84107
Phone: 801.547.0393
www.jub.com

Subconsultant:
Stantec
Stantec
2890 E Cottonwood Pkwy
Suite 300, Salt Lake City, Ut
84121
Tel: +1.801.617.3200
www.stantec.com

AGENCY

REVIEW

REUSE OF DRAWINGS
J-U-B SHALL RETAIN ALL COMMON LAW, STATUTORY, COPYRIGHT AND OTHER RESERVED RIGHTS OF THESE DRAWINGS, AND THE SAME SHALL NOT BE REUSED WITHOUT J-U-B'S PRIOR WRITTEN CONSENT. ANY REUSE WITHOUT WRITTEN CONSENT BY J-U-B WILL BE AT CLIENTS SOLE RISK AND WITHOUT LIABILITY OR LEGAL EXPOSURE TO J-U-B

| NO. | REVISION | BY (APP.) | DATE |
|---|---|---|---|
| A | ADDENDUM NO 2 | VBK BH | 04/06/2021 |

SPANISH FORK & MAPELTON WRF
SPANISH FORK CITY CORPORATION

INSTRUMENTATION AND CONTROL
INSTALLATION DETAILS - I

FILE : 55-20-124 00I-901
JUB PROJ. # : 55-20-124
DRAWN BY: VBK
DESIGN BY: BH
CHECKED BY: SR
ONE INCH
AT FULL SIZE, IF NOT ONE INCH, SCALE ACCORDINGLY
LAST UPDATED: 6/30/2022

DRAWING:
00-I-901
SHEET: 484 OF 691

Plot Date:6/30/2022 8:03 PM Plotted By: Pimaduwa Hewage, Ranga
Date Created:8/29/2021 C:\PLANTCAD\HE\181301\99_SPNSH FRK MAPLTN WRF DESIGN\PID DWG\55-20-124_00I-901.DWG

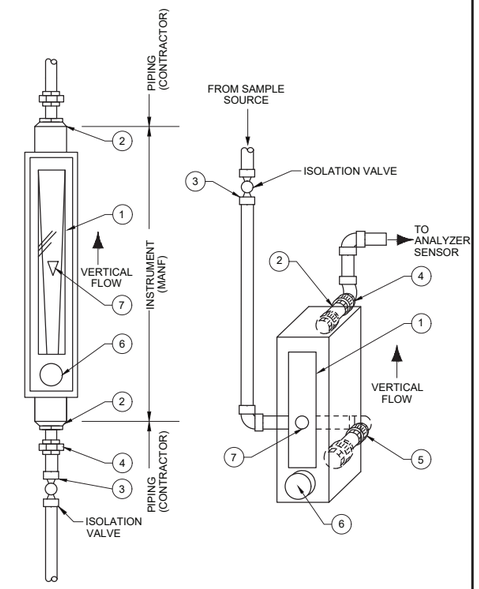


GLASS TUBE ROTAMETER INLINE INSTALLATION

GLASS TUBE ROTAMETER WET PANEL (STAND OFF) INSTALLATION

GENERAL NOTES:

1. WETTED MATERIALS SHALL BE CHEMICALLY INERT TO THE PROCESS.
2. REFER TO P&IDS AND DATA SHEETS FOR PROCESS PIPING SIZE AND MATERIAL.
3. INSTALLATION OF ANY FLANGED UNITS SHALL BE CARRIED OUT IN COOPERATION WITH THE PIPING CONTRACTOR.

KEYNOTES:

A. MATERIAL SELECTION AND SIZE SUBJECT TO PROCESS, PROCESS CONDITIONS AND INSTALLATION ENVIRONMENT.

| BILL OF MATERIALS | | | | | |
|---|---|---|---|---|---|
| ITEM | QTY | DESCRIPTION | SUPPLY | MATERIAL / RATING (WATER) | MATERIAL / RATING (CHEMICAL) |
| 1 | 1 | CALIBRATED GLASS TUBE ENCLOSURE | MANF | 316 SS BODY | 316 SS / POLY-CARBONATE BODY (INDOOR ONLY) |
| 2 | 2 | THREADED END FITTING (FNPT) | MANF | 316 SS | 316 SS / PVC |
| 3 | 3 | BALL ISOLATION VALVE | CONTRACTOR | (A) | (A) |
| 4 | AR | PIPING UNION | CONTRACTOR | (A) | (A) |
| 5 | AR | PIPING ELBOW | CONTRACTOR | (A) | (A) |
| 6 | 1 | INTEGRAL ADJUSTMENT NEEDLE VALVE | MANF | PER MANF | PER MANF |
| 7 | 1 | INTEGRAL FLOAT | MANF | 316 SS | 316 SS / GLASS / PVDF |

I-106 ROTAMETER
REV 010119

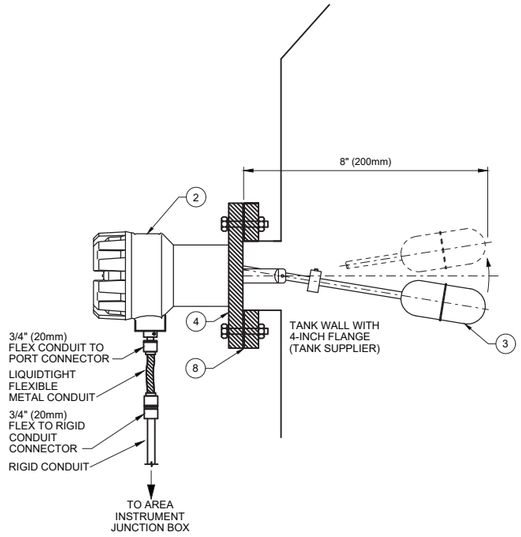


SIDE MOUNT FLANGE INSTALLATION

GENERAL NOTES:

1. PROVIDE MECHANICAL SUPPORT AND FITTINGS FOR ROUTED CONDUIT.
2. SWITCHES SHALL BE MOUNTED AND ORIENTED IN ACCORDANCE WITH THE MANUFACTURER REQUIREMENTS.
3. INSTALLATION OF ANY FLANGED UNITS SHALL BE CARRIED OUT IN COOPERATION WITH THE PIPING AND/ OR TANK SUPPLIER CONTRACTOR.
4. WETTED MATERIALS SHALL BE CHEMICALLY INERT TO THE PROCESS.
5. REFER TO DIVISION 26 SPECIFICATIONS FOR FLEX AND RIGID CONDUIT MATERIAL AND USAGE LIMITATIONS.
6. REFER TO TANK MECHANICAL DATA SHEETS OR DETAILS FOR TANK NOZZLE SIZE AND SPACING. INSTRUMENT INSTALLATION IN THE TANK MANWAY IS NOT PERMITTED.
7. USE PVC COATED SS TIE-WRAPS TO NEATLY COIL AND SECURE ANY EXCESS FLOAT CABLING AS SHOWN.

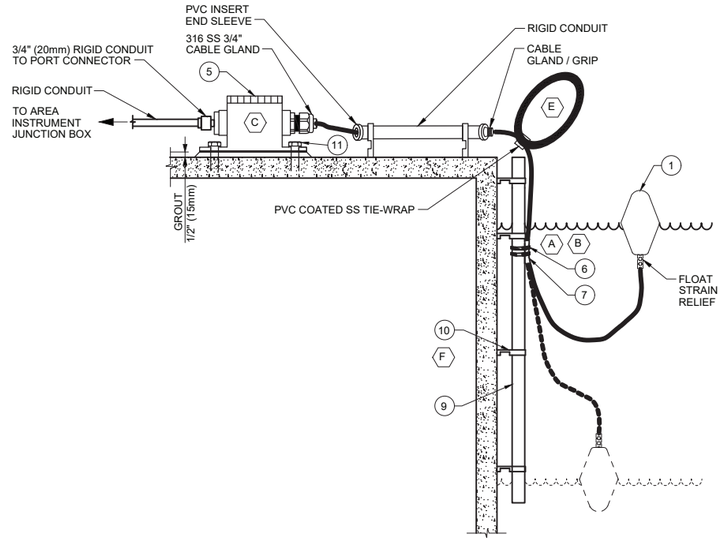


SUSPENDED FLOAT

KEYNOTES:

A. POSITION THE ADJUSTABLE STRAIN RELIEF ON THE CABLE TO ALLOW ONE HALF THE DISTANCE OF THE DIFFERENTIAL BAND BETWEEN THE END OF THE ADJUSTABLE STRAIN RELIEF AND THE END OF THE STRAIN RELIEF ON THE FLOAT.

B. FOR SUSPENDED FLOAT, PROVIDE CABLE TIE AT MIDPOINT AND TOP OF ADJUSTABLE STRAIN RELIEF AS SHOWN, PLUS ONE CABLE TIE FOR EVERY 12" (300mm) OF CABLE LENGTH.

C. TERMINAL JUNCTION BOX SHALL BE WALL OR FLOOR MOUNTED IN EASILY ACCESSED LOCATION WITHIN 30 FEET (10 METERS) OF INSTRUMENT INSTALLATION. FOR FLOOR MOUNT PROVIDE 1/2" (15mm) THICK GROUTING. FOR WALL MOUNT, LOCATE APPROXIMATELY 36" (1 METER) ABOVE GRADE. IF AREA INSTRUMENT JUNCTION BOX IS WITHIN 33 FEET (10 METERS) OF INSTRUMENT INSTALLATION, TERMINAL BOX WILL NOT BE REQUIRED AND INSTRUMENT CABLE MUST BE ROUTED WITHOUT SPLICE OF ANY KIND.

D. 316 SS OR HASTELLOY C PREFERRED. HOWEVER ENGINEER APPROVED FINAL SELECTION BASED ON MATERIAL CHEMICAL COMPATIBILITY.

E. MAINTENANCE LOOP SHALL INCLUDE 3 FEET (1 METER) LENGTH OF CABLE SECURED WITH PVC-COATED SS TIE WRAPS, BEND RADIUS NO LESS THAN 8" (200mm).

F. PROVIDE MOUNTING BRACKET SUPPORT FOR EVERY 3FT (1M) OF PIPE LENGTH.

| BILL OF MATERIALS | | | | | |
|---|---|---|---|---|---|
| ITEM | QTY | DESCRIPTION | SUPPLY | MATERIAL/RATING (WATER) | MATERIAL/RATING (CHEMICAL) |
| 1 | 1 | SUSPENDED BALL FLOAT SWITCH WITH INTEGRAL CABLE | MANF | PVC | PVC |
| 2 | 1 | FLOAT SWITCH HOUSING | MANF | EPOXY COATED ALUMINUM | EPOXY COATED ALUMINUM |
| 3 | 1 | TIPPING FLOAT | MANF | 316 SS | (D) |
| 4 | 1 | 4" (DN100) DIA THREADED FLANGE AND MOUNTING HARDWARE | MANF | 316 SS | (D) |
| 5 | AR | LOCKABLE SCREW LID TERMINAL JUNCTION BOX WITH DIN-RAIL MOUNTED TERMINAL BLOCK (MIN DIMENSIONS: 2" (53mm) (h)x4" (110mm) (Ø)) | MANF | NEMA 4X / GRP | NEMA 4X / GRP |
| 6 | AR | CABLE TIES | CONT | PVC COATED 316 SS | PVC COATED 316 SS |
| 7 | 1 | ADJUSTABLE STRAIN RELIEF | MANF | NEOPRENE | NEOPRENE |
| 8 | AR | FLANGE GASKET | CONT | VITON | VITON |
| 9 | 1 | FLOAT SUPPORT PIPE | CONT | PVC (SCH 80) | PVC (SCH 80) |
| 10 | AR | MOUNTING BRACKET WITH 5/8" (16mm) SS ANCHOR BOLTS (F) | CONT | 316 SS | 316 SS |
| 11 | AR | SS BOLTS / ANCHORS | CONT | 316 SS | 316 SS |

I-151 FLOAT LEVEL DETECTION SWITCH
REV 010119

J-U-B ENGINEERS, INC.
J-U-B ENGINEERS, INC.
392 E. Winchester St., Suite 300
Salt Lake City, UT 84107
Phone: 801.547.0393
www.jub.com

Subconsultant:
Stantec
Stantec
2890 E Cottonwood Pkwy
Suite 300, Salt Lake City, Ut 84121
Tel: +1.801.617.3200
www.stantec.com

AGENCY

REVIEW

REUSE OF DRAWINGS
J-U-B SHALL RETAIN ALL COMMON LAW, STATUTORY, COPYRIGHT AND OTHER RESERVED RIGHTS OF THESE DRAWINGS, AND THE SAME SHALL NOT BE REUSED WITHOUT J-U-B'S PRIOR WRITTEN CONSENT. ANY REUSE WITHOUT WRITTEN CONSENT BY J-U-B WILL BE AT CLIENTS SOLE RISK AND WITHOUT LIABILITY OR LEGAL EXPOSURE TO J-U-B.

| NO. | REVISION / DESCRIPTION | BY (APP) | DATE |
|---|---|---|---|
| A | ADDENDUM NO 2 | VBK (BH) | 04/06/2021 |

SPANISH FORK & MAPELTON WRF
SPANISH FORK CITY CORPORATION

INSTRUMENTATION AND CONTROL
INSTALLATION DETAILS - II

FILE : 55-20-124_001-902
JUB PROJ. # : 55-20-124
DRAWN BY: VBK
DESIGN BY: BH
CHECKED BY: SR
ONE INCH
AT FULL SIZE, IF NOT ONE INCH, SCALE ACCORDINGLY
LAST UPDATED: 6/30/2022

DRAWING:
00-I-902

SHEET: 485 OF 691

Plot Date:6/30/2022 8:03 PM Plotted By: Pimradwee-Hewage, Ranga
Date Created:8/28/2021 C:\PLANTCAD\HE\181301\39_SPNSH FRK MAPLTN WRF DESIGN\PID DWG\55-20-124_001-902.DWG

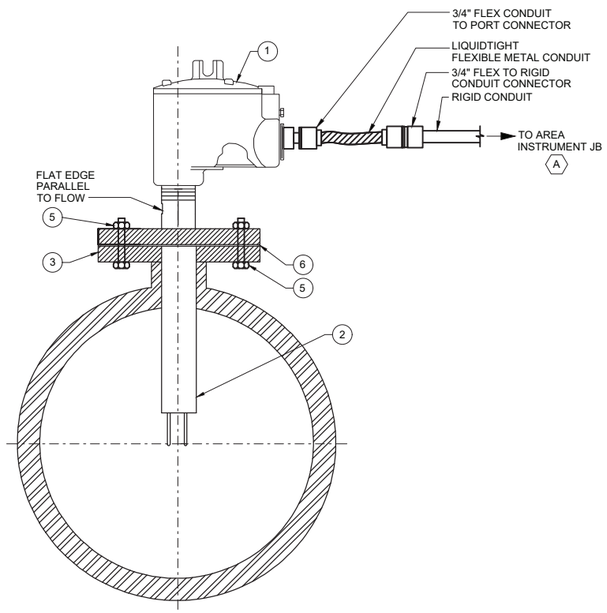


FLANGED PIPE MOUNT

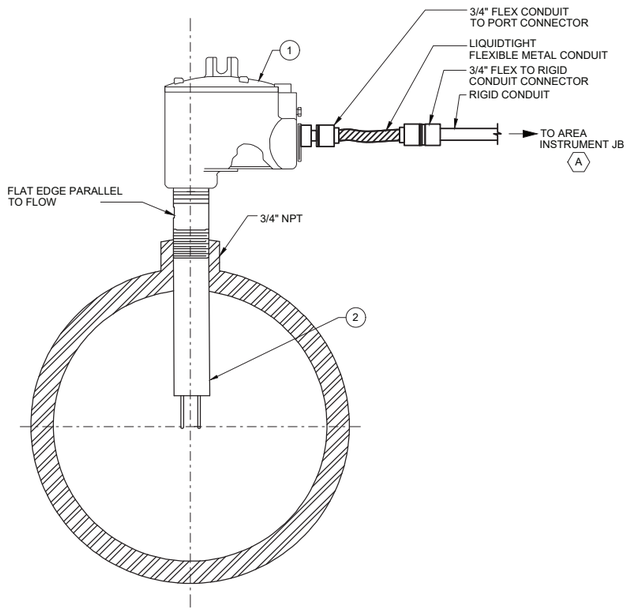


NPT PIPE THREAD MOUNT

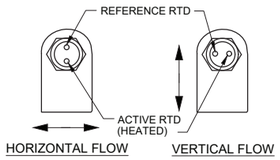


SENSOR ORIENTATION
(TOP VIEW)

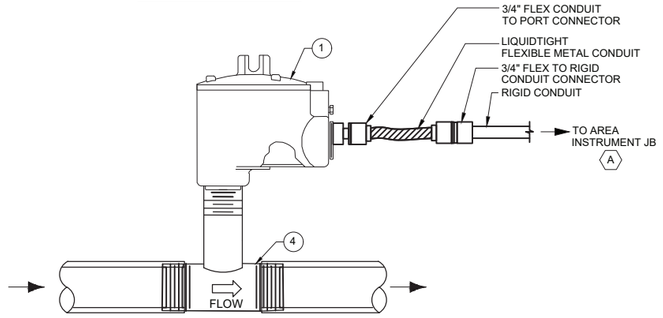


TEE AND SOCKET MOUNT
(IN-LINE FLOW ELEMENT)

GENERAL NOTES:

1. PROVIDE MECHANICAL SUPPORT FOR ROUTED CONDUIT.
2. REFER TO P&IDS AND DATA SHEETS FOR PROCESS PIPING SIZE AND MATERIAL.
3. INSTALLATION OF FLANGED ELEMENTS SHALL BE CARRIED OUT IN COOPERATION WITH THE PIPING CONTRACTOR WITH ISOLATON OF DISSIMILAR MATERIALS ACCOMODATED AS NECESSARY.
4. WETTED MATERIALS SHALL BE CHEMICALLY INERT TO THE PROCESS.
5. REFER TO DIVISION 26 SPECIFICATIONS FOR FLEX AND RIGID CONDUIT MATERIAL AND USAGE LIMITATIONS.
6. APPLY SEALANT TO MALE THREADS.
7. ENSURE INSTALLED PROBE AND ELECTRONICS ARE A VENDOR MATCHED PAIR.

KEYNOTES:

A. 4 WIRE DEVICE EMPLOYING 24VDC OR 120VAC POWER. REFER TO INSTRUMENT SPECS OR DATASHEET.

BILL OF MATERIALS

| ITEM | QTY | DESCRIPTION | SUPPLY | MATERIAL/ RATING (WATER) | MATERIAL/ RATING (CHEMICAL) |
|---|---|---|---|---|---|
| 1 | 1 | THERMAL FLOW SWITCH ELECTRONIC HOUSING | MANF | EPOXY COATED ALUMINUM | EPOXY COATED ALUMINUM |
| 2 | 1 | SENSOR (LENGTH AS RECOMMENDED BY MANUFACTURER) | MANF | 316 SS | 316 SS OR HASTELLOY C |
| 3 | AR | THREADED INSTRUMENT FLANGE (RATING PER PROCESS REQUIREMENT) | MANF | 316 SS | 316 SS OR PVC |
| 4 | 1 | THREADED PROCESS CONNECTION TEE (2x1" MNPT PORTS) | MANF | 316 SS | 316 SS OR HASTELLOY C |
| 5 | AR | FLANGE BOLTS | CONT | 316 SS | 316 SS |
| 6 | 1 | GASKET | CONT | VITON | VITON |

I-152

# THERMAL TYPE FLOW DETECTION SWITCH

REV 010119


J-U-B ENGINEERS, INC.

J-U-B ENGINEERS, INC.
392. E. Winchester St., Suite 300
Salt Lake City, UT 84107
Phone: 801.547.0393
www.jub.com

Subconsultant:

Stantec

Stantec
2890 E Cottonwood Pkwy
Suite 300, Salt Lake City, Ut
84121
Tel: +1.801.617.3200
www.stantec.com


AGENCY

REVIEW


REUSE OF DRAWINGS
J-U-B SHALL RETAIN ALL COMMON LAW, STATUTORY, COPYRIGHT AND OTHER RESERVED RIGHTS OF THESE DRAWINGS, AND THE SAME SHALL NOT BE REUSED WITHOUT J-U-B'S PRIOR WRITTEN CONSENT. ANY REUSE WITHOUT WRITTEN CONSENT BY J-U-B WILL BE AT CLIENTS SOLE RISK AND WITHOUT LIABILITY OR LEGAL EXPOSURE TO J-U-B.


| NO. | REVISION | BY (APP.) | DATE |
|---|---|---|---|
| A | ADDENDUM NO 2 | VBK (BH) | 04/06/2021 |

SPANISH FORK & MAPELTON WRF
SPANISH FORK CITY CORPORATION

INSTRUMENTATION AND CONTROL
INSTALLATION DETAILS - III

FILE : 55-20-124_001-903
JUB PROJ. # : 55-20-124
DRAWN BY: VBK
DESIGN BY: BH
CHECKED BY: SR
ONE INCH
AT FULL SIZE, IF NOT ONE INCH, SCALE ACCORDINGLY
LAST UPDATED: 6/30/2022

DRAWING:
00-I-903

SHEET: 486 OF 691


Plot Date:6/30/2022 8:03 PM Plotted By: Pinnaduwa-Hewage, Ranga
Date Created:8/29/2021 C:\PLANTCAD\HE1181301139_SPNSH FRK MAPLTN WRF DESIGN\PID DWG\55-20-124_001-903.DWG

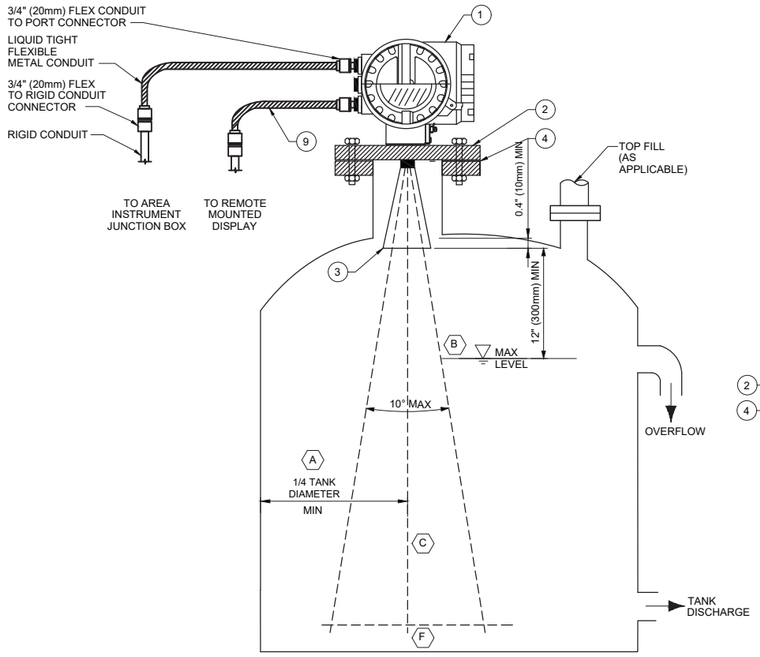


TANK INSTALLED - TOP FLANGE MOUNT WITH REMOTE DISPLAY

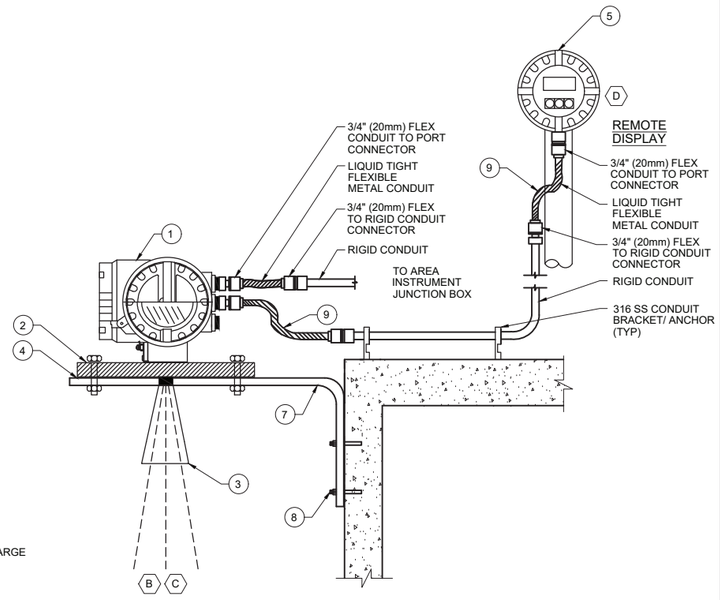


BRACKET INSTALLED - WALL MOUNT WITH REMOTE DISPLAY

GENERAL NOTES:

1. PROVIDE MECHANICAL SUPPORT AND FITTINGS FOR ROUTED CONDUIT.
2. IN APPLICATIONS WITH HEAVY CONDENSATION ANTICIPATED OR TURBULENT LIQUID SURFACE, EMPLOY MANUFACTURER RECOMMENDED LOW FREQUENCY MODEL. SELECTED WAVELENGTH SHOULD BE LARGER THAN ANTICIPATED RIPPLE SIZE.
3. VENDOR FURNISHED CABLING SHALL BE RATED WATERTIGHT AND FOR CONTINUOUS UV EXPOSURE WITHOUT DEGRADATION.
4. ELECTRONIC SUPPRESSION OF INTERFERENCE ECHOES USING MANF. TRANSMITTER TOOLS MAY BE REQUIRED.
5. REFER TO DIVISION 26 SPECIFICATIONS FOR FLEX AND RIGID CONDUIT MATERIAL AND USAGE LIMITATIONS.
6. REFER TO TANK MECHANICAL DATA SHEETS OR DETAILS FOR TANK NOZZLE SIZE AND SPACING. INSTRUMENT INSTALLATION IN THE TANK MANWAY IS NOT PERMITTED.
7. USE PVC COATED SS TIE-WRAPS TO NEATLY COIL AND SECURE ANY EXCESS SENSOR CABLING AS SHOWN.

KEYNOTES:

A. INSTRUMENT SHALL BE FLANGE MOUNTED, AT 0.25 TANK DIAMETER OR 10 INCHES FROM TANK WALL (WHICHEVER IS GREATER BUT SUBJECT TO MANUFACTURER REQUIREMENTS) AND OPPOSITE TO ANY TOP FILL FACILITIES. FOR TANKS CONSTRUCTED OF NON-CONDUCTIVE MATERIAL, BEAM ANGLE SHOULD BE CONTAINED WITHIN THE TANK TO AVOID INTERFERENCE FROM REFLECTIVE MATERIAL LOCATED OUTSIDE THE TANK.

B. THE SENSOR HORN BOTTOM RIM SHALL BE INSTALLED NO LESS THAN 12" (300mm) ABOVE THE MAXIMUM TANK LEVEL AND PROPERLY ALIGNED PER THE MANUFACTURER'S REQUIREMENTS.

C. SENSOR SHALL BE INSTALLED SUCH THAT THE BEAM ANGLE DOES NOT ENCOUNTER ANY PHYSICAL DEVICE OR FLOW STREAM IN THE BEAM'S SENSING PATH.

D. MOUNT DISPLAY ON STANDARD INSTRUMENT STAND PER DETAIL I-701 / 702. SUNSHIELD REQUIRED FOR OUTDOOR INSTALLATION.

E. MANUFACTURE FURNISHED ANGLE BRACKET (WITH MOUNTING HARDWARE) SHALL BE SIZED AND TAPPED TO SUPPORT WALL-MOUNT INSTALLATION. REFER TO INSTRUMENT SCHEDULE OR DATA SHEET FOR MEASURING DEPTH REQUIREMENT.

F. IN THE CASE OF MEDIA WITH LOW DIELECTRIC CONSTANT (WHERE THE TANK BOTTOM IS VISIBLE THROUGH THE MEDIA AT LOW LEVELS) A MANUFACTURER RECOMMENDED REPOSITIONING OF ZERO LEVEL MUST BE OBSERVED.

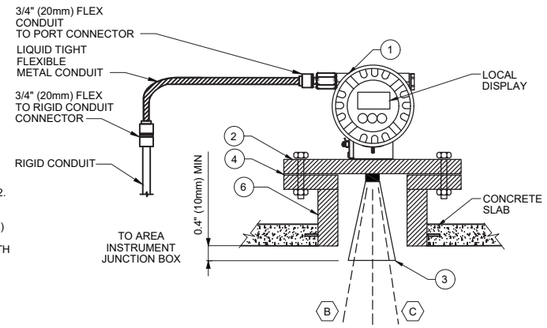


CONCRETE TANK - TOP MOUNT WITH LOCAL DISPLAY

BILL OF MATERIALS

| ITEM | QTY | DESCRIPTION | SUPPLY | MATERIAL/RATING (WATER) | MATERIAL/RATING (CHEMICAL) |
|---|---|---|---|---|---|
| 1 | 1 | TRANSMITTER ELECTRONIC HOUSING | MANF | EPOXY COATED ALUMINUM | EPOXY COATED ALUMINUM |
| 2 | 1 | 6" (DN150) DIA FLANGE (TAPPED TO ACCOMMODATE INSTRUMENT FITTING) AND MOUNTING HARDWARE | MANF | 316 SS | 316 SS |
| 3 | 1 | 3" (DN80) OR 4" (DN100) ANTENNA HORN (LENGTH TO ACHIEVE MAX BEAM ANGLE INDICATED) | MANF | 316 SS | ALLOY-400 OR PTFE |
| 4 | AR | GASKET | CONT | VITON | VITON |
| 5 | 1 | REMOTE DISPLAY | MANF | EPOXY COATED ALUMINUM | EPOXY COATED ALUMINUM |
| 6 | 1 | 6" (150mm) DIA SCH 80 FLANGED PIPE SLEEVE WITH SEEP RING | CONT | 304 SS | 316 SS OR PVC |
| 7 | 1 | WALL-MOUNT ANGLE BRACKET TAPPED FOR INSTRUMENT FITTING (SIZED TO MAINTAIN MINIMUM DISTANCE BETWEEN BEAM AND WALL) (E) | MANF | 316 SS | 316 SS |
| 8 | AR | ANCHOR BOLTS AND MOUNTING HARDWARE | MANF | 316 SS | 316 SS |
| 9 | 1 | IN-CONDUIT REMOTE DISPLAY CABLE LIMIT ROUTING TO 66 FEET (20M) | MANF | PER VENDOR | PER VENDOR |

I-202

# RADAR LEVEL TRANSMITTER

REV 010119

J-U-B ENGINEERS, INC.
J-U-B ENGINEERS, INC.
392. E. Winchester St., Suite 300
Salt Lake City, UT 84107
Phone: 801.547.0393
www.jub.com

Subconsultant:
Stantec
Stantec
2890 E Cottonwood Pkwy
Suite 300, Salt Lake City, Ut 84121
Tel: +1.801.617.3200
www.stantec.com

AGENCY

REVIEW

REUSE OF DRAWINGS
J-U-B SHALL RETAIN ALL COMMON LAW, STATUTORY, COPYRIGHT AND OTHER RESERVED RIGHTS OF THESE DRAWINGS, AND THE SAME SHALL NOT BE REUSED WITHOUT J-U-B'S PRIOR WRITTEN CONSENT. ANY REUSE WITHOUT WRITTEN CONSENT BY J-U-B WILL BE AT CLIENTS SOLE RISK AND WITHOUT LIABILITY OR LEGAL EXPOSURE TO J-U-B.

| NO. | DESCRIPTION | BY (APP.) | DATE |
|---|---|---|---|
| A | ADDENDUM NO 2 | VBK (BH) | 04/06/2021 |

SPANISH FORK & MAPELTON WRF
SPANISH FORK CITY CORPORATION

INSTRUMENTATION AND CONTROL
INSTALLATION DETAILS - IV

FILE : 55-20-124_001-904
JUB PROJ. # : 55-20-124
DRAWN BY: VBK
DESIGN BY: BH
CHECKED BY: SR
ONE INCH
AT FULL SIZE, IF NOT ONE INCH, SCALE ACCORDINGLY
LAST UPDATED: 6/30/2022

DRAWING:
00-I-904

SHEET: 487 OF 691

Plot Date:6/30/2022 8:03 PM Plotted By: Pinnduwa-Hawage, Ranga
Date Created:8/29/2021 C:\PLANTCAD\HE1181301139_SPNSH FRK MAPLTN WRF DESIGN\PID DWG\55-20-124_001-904.DWG

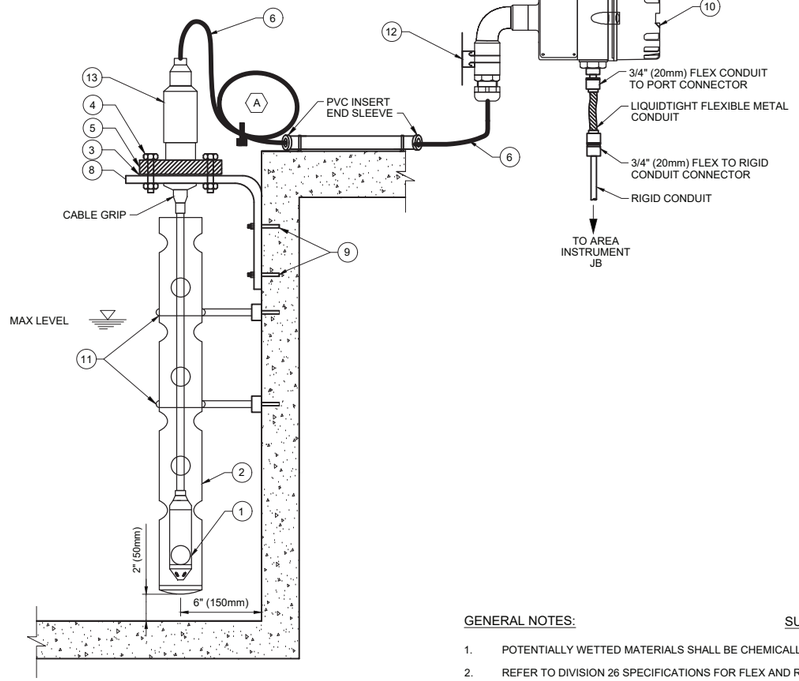


SUBMERSIBLE LEVEL SENSOR - BRACKET MOUNT

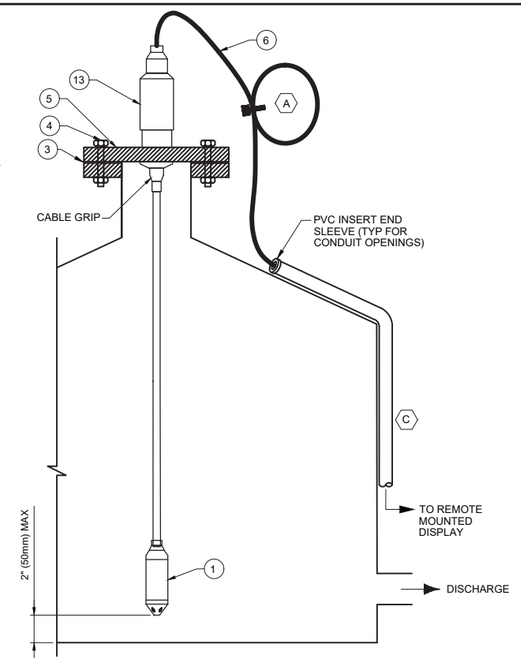


SUBMERSIBLE LEVEL SENSOR - TANK TOP MOUNT

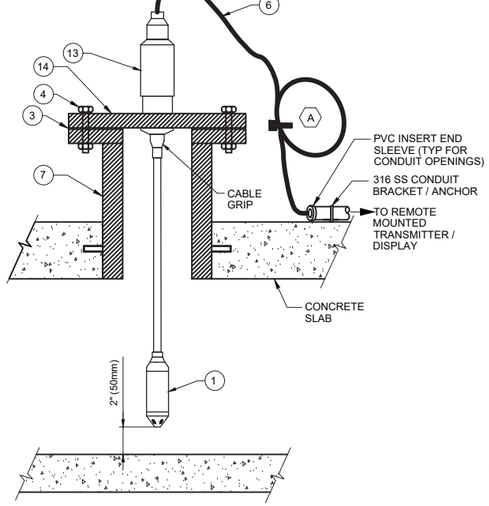


SUBMERSIBLE LEVEL SENSOR - SLAB MOUNT

GENERAL NOTES:

1. POTENTIALLY WETTED MATERIALS SHALL BE CHEMICALLY INERT TO THE PROCESS.
2. REFER TO DIVISION 26 SPECIFICATIONS FOR FLEX AND RIGID CONDUIT MATERIAL AND USAGE LIMITATIONS.
3. SENSOR CABLE SPLICE OF ANY KIND SHALL NOT BE ACCEPTABLE.
4. CONTRACTOR SHALL VERIFY SUITABILITY OF STILLING WELL PERFORATION DENSITY AND SIZING WITH LEVEL SENSOR MANUFACTURER PRIOR TO FINAL ENGINEER APPROVAL FOR INSTALLATION.
5. REFER TO TANK MECHANICAL DATA SHEETS OR DETAILS FOR TANK NOZZLE SIZE AND SPACING. INSTRUMENT INSTALLATION IN THE TANK MANWAY IS NOT PERMITTED.
6. USE PVC COATED SS TIE-WRAPS TO NEATLY COIL AND SECURE ANY EXCESS SENSOR CABLING AS SHOWN.

KEYNOTES:

A. MAINTENANCE LOOP SHALL INCLUDE 3FT (1 M) LENGTH OF CABLE SECURED WITH PVC-COATED SS TIE WRAPS, BEND RADIUS NO LESS THAN 8" (200mm).

B. PROVIDE MOUNTING BRACKET SUPPORT FOR EVERY 3FT (1M) OF PIPE LENGTH.

C. SECURE CONDUIT TO TANK SIDE USING PROJECT APPROVED MEANS PER TANK TYPE.

D. MANUFACTURER FURNISHED ANGLE BRACKET (WITH MOUNTING HARDWARE) SHALL BE SIZED AND TAPPED TO SUPPORT WALL-MOUNT INSTALLATION. REFER TO INSTRUMENT SELECTION OR DATA SHEET FOR MEASURING DEPTH REQUIREMENT.

BILL OF MATERIALS

| ITEM | QTY | DESCRIPTION | SUPPLY | MATERIAL/RATING (WATER) | MATERIAL/RATING (CHEMICAL) |
|---|---|---|---|---|---|
| 1 | 1 | SUBMERSIBLE PRESSURE SENSOR | MANF | PER VENDOR | N/A |
| 2 | 1 | PERFORATED 2"(DN50) SCH 80 PVC PIPE STILLING WELL | CONT | PVC | PVC |
| 3 | 1 | GASKET | CONT | VITON | VITON |
| 4 | AR | FLANGED BOLTS | MANF | 304 SS | 316 SS |
| 5 | 1 | 4" (DN100) DIA FLANGE PLATE (TAPPED FOR INSTRUMENT FITTING) | MANF | 304 SS | 316 SS OR PVC |
| 6 | AR | INTEGRAL UV-RESISTANT SENSOR SIGNAL CABLE | MANF | PER VENDOR | PER VENDOR |
| 7 | 1 | 6" (150mm) DIA SCH 80 FLANGED PIPE SLEEVE WITH SEEP RING | CONT | 304 SS | 316 SS OR PVC |
| 8 | 1 | WALL-MOUNT ANGLE BRACKET TAPPED FOR PROBE FITTING (D) | MANF | 316 SS | 316 SS |
| 9 | AR | ANCHOR BOLTS AND MOUNTING HARDWARE | MANF | 316 SS | 316 SS |
| 10 | 1 | LEVEL TRANSMITTER / DISPLAY | MANF | EPOXY COATED ALUMINUM | EPOXY COATED ALUMINUM |
| 11 | AR | U-BOLTS AND MOUNTING BRACKET HARDWARE (B) | CONT | 316 SS | 316 SS |
| 12 | AR | P1000 (1 5/8") (40mm) UNISTRUT AND MOUNTING STRAP | CONT | 304 SS | 304 SS |
| 13 | 1 | HOUSING ADAPTER | MANF | 316 SS | 316 SS |
| 14 | 1 | 6" (DN150) DIA FLANGE PLATE (TAPPED FOR INSTRUMENT FITTING) | MANF | 316 SS | 316 SS OR PVC |

I-204

# SUBMERSIBLE (HYDROSTATIC) LEVEL SENSOR

REV 010119


J-U-B ENGINEERS, INC.

J-U-B ENGINEERS, INC.
392. E. Winchester St., Suite 300
Salt Lake City, UT 84107
Phone: 801.547.0393
www.jub.com

Subconsultant:

Stantec
Stantec
2890 E Cottonwood Pkwy
Suite 300, Salt Lake City, Ut
84121
Tel: +1.801.617.3200
www.stantec.com


AGENCY

REVIEW


REUSE OF DRAWINGS
J-U-B SHALL RETAIN ALL COMMON LAW, STATUTORY, COPYRIGHT AND OTHER RESERVED RIGHTS OF THESE DRAWINGS, AND THE SAME SHALL NOT BE REUSED WITHOUT J-U-B'S PRIOR WRITTEN CONSENT. ANY REUSE WITHOUT WRITTEN CONSENT BY J-U-B WILL BE AT CLIENTS SOLE RISK AND WITHOUT LIABILITY OR LEGAL EXPOSURE TO J-U-B.


| NO. | REVISION | BY (APP.) | DATE |
|---|---|---|---|
| A | ADDENDUM NO 2 | VBK (BH) | 04/06/2021 |

SPANISH FORK & MAPELTON WRF
SPANISH FORK CITY CORPORATION

INSTRUMENTATION AND CONTROL
INSTALLATION DETAILS - V

FILE : 55-20-124_001-905
JUB PROJ. # : 55-20-124
DRAWN BY: VBK
DESIGN BY: BH
CHECKED BY: SR
ONE INCH
AT FULL SIZE, IF NOT ONE INCH, SCALE ACCORDINGLY
LAST UPDATED: 6/30/2022

DRAWING:
00-I-905

SHEET: 488 OF 691


Plot Date:6/30/2022 8:03 PM Plotted By: Pinnaduwa-Hewage, Ranga
Date Created:8/29/2021 C:\PLANTCAD\IE1181301139_SPNSH FRK MAPLTN WRF DESIGN\PID DWG\55-20-124_001-905.DWG

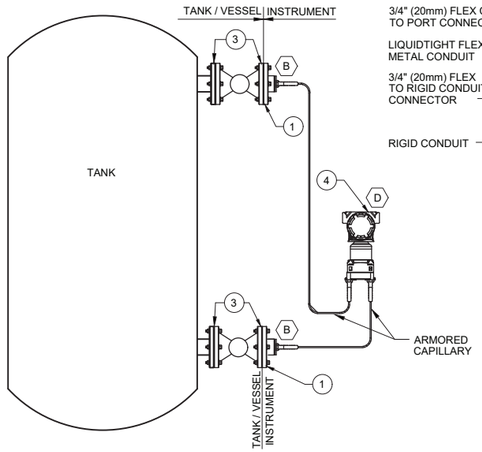


PRESSURIZED TANK WITH DUAL DIAPHRAGM SYSTEM

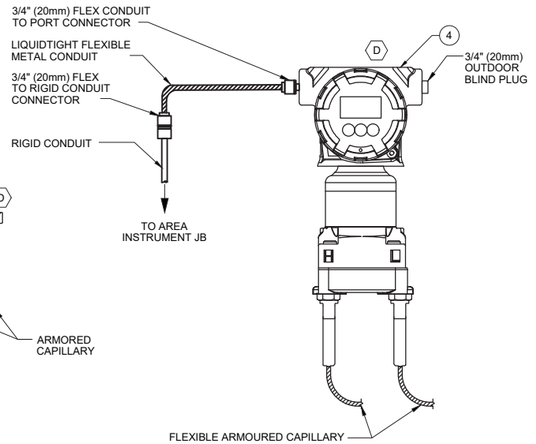


DIFFERENTIAL PRESSURE TRANSMITTER WITH LOCAL DISPLAY

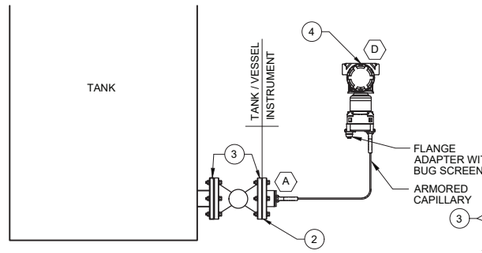


UN-PRESSURIZED TANK WITH SINGLE DIAPHRAGM SYSTEM

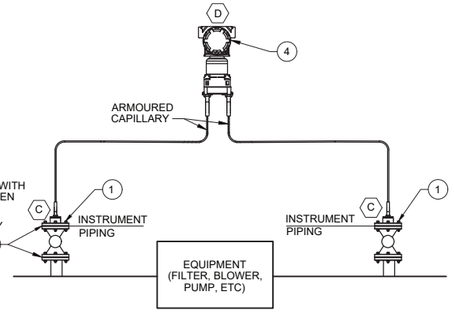


DIFFERENTIAL PRESSURE TRANSMITTER ACROSS EQUIPMENT

GENERAL NOTES:

1. REFER TO P&IDS AND DATA SHEETS FOR PROCESS PIPING SIZE AND MATERIAL.
2. PIPING SIDE ISOLATION VALVES FURNISHED AND INSTALLED BY MECHANICAL CONTRACTOR.
3. REFER TO DIVISION 26 SPECIFICATIONS FOR FLEX AND RIGID CONDUIT MATERIAL AND USAGE LIMITATIONS.
4. REFER TO TANK MECHANICAL DATA SHEETS OR DETAILS FOR TANK NOZZLE SIZE AND SPACING. INSTRUMENT INSTALLATION IN THE TANK MANWAY IS NOT PERMITTED.
5. USE PVC COATED SS TIE-WRAPS TO NEATLY COIL AND SECURE ANY EXCESS SENSOR CABLING AS SHOWN.

KEYNOTES:

A. SINGLE CAPILLARY DIAPHRAGM FOR USE ON UN-PRESSURIZED TANK: CAPILLARY CONNECTION TO HIGH SIDE OF DP TRANSMITTER. PROVIDE BUG SCREEN FOR LOW SIDE.

B. DUAL CAPILLARY DIAPHRAGM SEAL SYSTEM FOR USE ON PRESSURIZED TANK: HIGH SIDE CONNECTION AT BOTTOM OF TANK. LOW SIDE CONNECTION AT TOP OF TANK.

C. DUAL CAPILLARY DIAPHRAGM SEAL SYSTEM: LOW SIDE CONNECTION ON EQUIPMENT INTAKE OR FILTER DISCHARGE; HIGH SIDE CONNECTION ON EQUIPMENT DISCHARGE OR FILTER INTAKE.

D. WALL OR INSTRUMENT-STAND MOUNT PER DETAIL I-701.

E. ARMORED CAPILLARIES: 316 SS. FLANGES: 316 SS OR HASTELLOY C PREFERRED. HOWEVER ENGINEER APPROVED FINAL SELECTION BASED ON MATERIAL CHEMICAL COMPATIBILITY.

F. FOR AMBIENT TEMPERATURE APPLICATIONS LOWER THAN -10 degC, ETHYLENE GLYCOL FILL FLUID REQUIRED IN LIEU OF STANDARD SILICONE OIL.

BILL OF MATERIALS

| ITEM | QTY | DESCRIPTION | SUPPLY | MATERIAL/ RATING (WATER) | MATERIAL/ RATING (CHEMICAL) |
|---|---|---|---|---|---|
| 1 | AR | DUAL CAPILLARY DIAPHRAGM SEAL SYSTEM: HIGH SIDE / LOW SIDE SEAL FLANGES (SIZED AND RATED TO MATCH ISOLATION VALVE FLANGE AND PROCESS REQUIREMENTS) EACH WITH INTEGRAL 1/4" (8mm) ARMORED CAPILLARY TUBE (LENGTH AS REQUIRED); SILICONE OIL FILL FLUID. | MANF | 316 SS (FLANGES AND CAPILLARIES) | E F |
| 2 | AR | SINGLE CAPILLARY DIAPHRAGM SEAL SYSTEM: HIGH SIDE SEAL FLANGE (SIZED AND RATED TO MATCH ISOLATION VALVE FLANGE AND PROCESS REQUIREMENTS) WITH INTEGRAL 1/4" (8mm) ARMORED CAPILLARY TUBE (LENGTH AS REQUIRED); SILICONE OIL FILL FLUID. | MANF | 316 SS (FLANGE AND CAPILLARY) | E F |
| 3 | AR | FLANGE GASKET - COMPATIBLE WITH PROCESS | CONT | VITON | VITON |
| 4 | 1 | DIFFERENTIAL PRESSURE TRANSMITTER HOUSING | MANF | EPOXY COATED ALUMINUM | EPOXY COATED ALUMINUM |

I-205 DIFFERENTIAL PRESSURE TYPE LEVEL TRANSMITTER

REV 010119

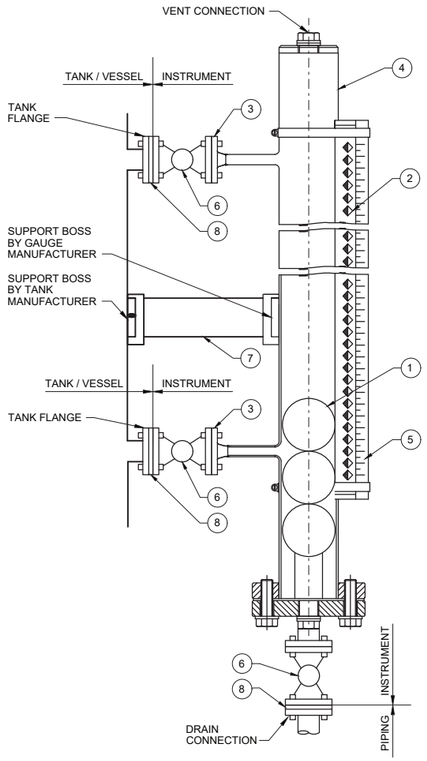


GENERAL NOTES:

1. LEVEL GAUGE SHALL BE SUPPORTED EVERY 3-FT (1M) BY MANUFACTURER SUPPLIED MOUNTING BRACKETS.
2. ALL COMPONENT MATERIALS, INCLUDING MOUNTING SUPPORT BRACKET SHALL BE CHEMICALLY INERT TO THE PROCESS.
3. REFER TO TANK MECHANICAL DATA SHEETS OR DETAILS FOR TANK NOZZLE SIZE AND SPACING.
4. COMBINATION SIDE-TOP MOUNT INSTALLATION OPTION PER TANK VENDOR.

BILL OF MATERIALS

| ITEM | QTY | DESCRIPTION | SUPPLY | MATERIAL / RATING (WATER) | MATERIAL / RATING (CHEMICAL) |
|---|---|---|---|---|---|
| 1 | AR | LEVEL FLOAT | MANF | 316 SS | 316 SS OR HASTELLOY C |
| 2 | 1 | LEVEL INDICATION FLAGS (RED/WHITE) | MANF | PVDF | PVDF |
| 3 | 3 | FLANGE (SIZE PER TANK VENDOR) | MANF | 316 SS | 316 SS OR HASTELLOY C |
| 4 | 1 | LEVEL GAUGE ASSEMBLY BODY | MANF | 316 SS | 316 SS OR HASTELLOY C |
| 5 | 1 | LEVEL SCALE (PER TANK VENDOR) | MANF | PVDF | PVDF |
| 6 | 3 | FLANGED BALL VALVE | MANF | 316 SS | 316 SS OR HASTELLOY C |
| 7 | AR | SUPPORT BRACKETS | MANF | 316 SS | 316 SS |
| 8 | 3 | FLANGE GASKET | CONTRACTOR | VITON | VITON |

I-208 TANK LEVEL SIGHT GAUGE

REV 010119


J-U-B ENGINEERS, INC.

J-U-B ENGINEERS, INC.
392. E. Winchester St., Suite 300
Salt Lake City, UT 84107
Phone: 801.547.0393
www.jub.com

Subconsultant:

Stantec
Stantec
2890 E Cottonwood Pkwy
Suite 300, Salt Lake City, Ut
84121
Tel: +1.801.617.3200
www.stantec.com


AGENCY

REVIEW


REUSE OF DRAWINGS
J-U-B SHALL RETAIN ALL COMMON LAW, STATUTORY, COPYRIGHT AND OTHER RESERVED RIGHTS OF THESE DRAWINGS, AND THE SAME SHALL NOT BE REUSED WITHOUT J-U-B'S PRIOR WRITTEN CONSENT. ANY REUSE WITHOUT WRITTEN CONSENT BY J-U-B WILL BE AT CLIENTS SOLE RISK AND WITHOUT LIABILITY OR LEGAL EXPOSURE TO J-U-B.


| NO. | REVISION | BY (APP) | DATE |
|---|---|---|---|
| A | ADDENDUM NO 2 | VBK (BH) | 04/06/2021 |

SPANISH FORK & MAPELTON WRF
SPANISH FORK CITY CORPORATION

INSTRUMENTATION AND CONTROL
INSTALLATION DETAILS - VI

FILE : 55-20-124_00I-906
JUB PROJ. # : 55-20-124
DRAWN BY: VBK
DESIGN BY: BH
CHECKED BY: SR

ONE INCH
AT FULL SIZE, IF NOT ONE INCH, SCALE ACCORDINGLY

LAST UPDATED: 6/30/2022

DRAWING:
00-I-906

SHEET: 489 OF 691


Plot Date:6/30/2022 8:03 PM Plotted By: Pinnaduwa Hewage, Ranga
Date Created:9/29/2021 C:\PLANTCACHE\181301159_SPNSH FRK MAPLTN WRF DESIGN\PID DWG\55-20-124_00I-906.DWG

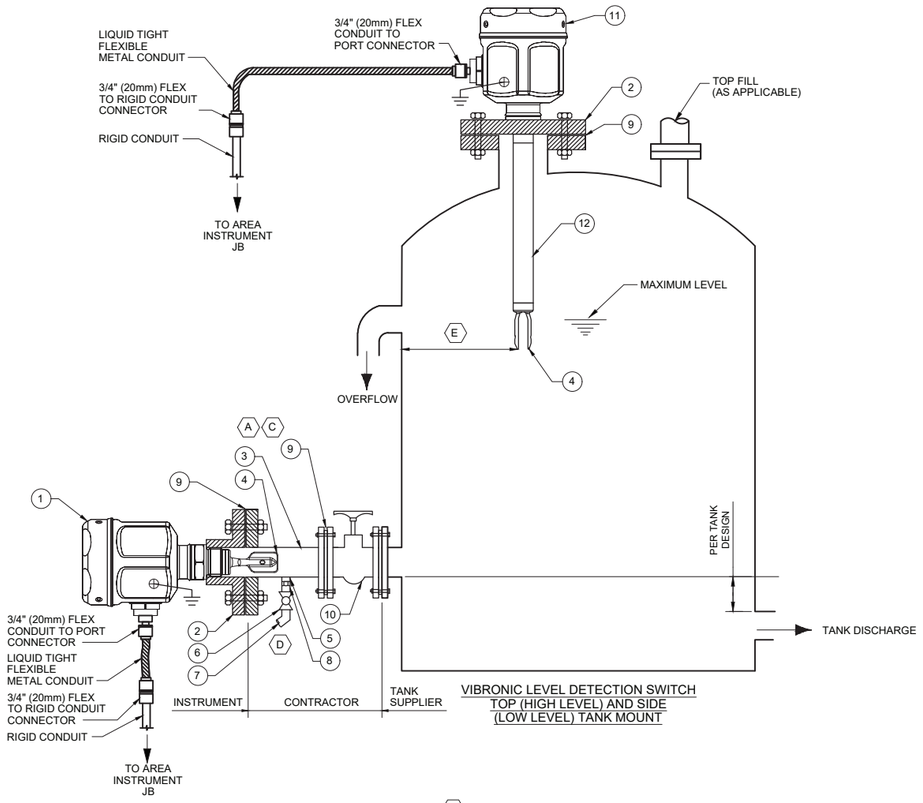


VIBRONIC LEVEL DETECTION SWITCH
TOP (HIGH LEVEL) AND SIDE
(LOW LEVEL) TANK MOUNT

GENERAL NOTES:

1. INSTALLATION OF SENSOR SHALL BE SUCH THAT SENSING FORK DOES NOT COME INTO CONTACT WITH ENTERING / FILLING LIQUIDS, VESSEL WALL, PROCESS BUILD UP, OR ANY OTHER PHYSICAL OBSTRUCTION.
2. PROVIDE MECHANICAL SUPPORT AND FITTINGS FOR ROUTED CONDUIT.
3. REFER TO DIVISION 26 SPECIFICATIONS FOR FLEX AND RIGID CONDUIT MATERIAL AND USAGE LIMITATIONS.
4. REFER TO TANK MECHANICAL DATA SHEETS OR DETAILS FOR TANK NOZZLE SIZE AND SPACING. INSTRUMENT INSTALLATION IN TANK MANWAY IS NOT PERMITTED.

KEYNOTES:

A. MINIMUM INSERTION LENGTH AND MINIMUM REQUIRED SENSOR CLEARANCES PER INSTRUMENT MANUFACTURER.
B. 316 SS OR HASTELLOY C PREFERRED. HOWEVER ENGINEER APPROVED FINAL SELECTION BASED ON MATERIAL CHEMICAL COMPATIBILITY.
C. CONTRACTOR SHALL SIZE FLANGED SPOOL PIECE TO ACCOMMODATE INSTRUMENT SENSOR PER INSTRUMENT MANUFACTURER SPECIFICATIONS. SPOOL PIECE SHALL INCLUDE 1" (DN25) TAP FOR DRAIN LINE WITH ISOLATION BALL VALVE.
D. DRAIN TO SAFE LOCATION.
E. ENSURE SUFFICIENT SPACE BETWEEN TANK WALL AND SENSOR TO PREVENT SENSOR FROM BECOMING COATED IN ANY ANTICIPATED TANK WALL BUILDUP.
F. SIZE AND MATERIAL AS DICTATED BY THE TANK MECHANICAL DETAILS.

BILL OF MATERIALS

| ITEM | QTY | DESCRIPTION | SUPPLY | MATERIAL/ RATING (WATER) | MATERIAL/ RATING (CHEMICAL) |
|---|---|---|---|---|---|
| 1 | 1 | ELECTRONIC HOUSING WITH 1" (25mm) NPT SENSOR | MANF | EPOXY COATED ALUMINUM | EPOXY COATED ALUMINUM |
| 2 | 1 | 3" (DN80) FLANGE (TAPPED FOR INSTRUMENT FITTING) | MANF | 316 SS | 316 SS OR PVC |
| 3 | 1 | 3" (DN80) ANSI 150 SCH 80 PIPE SPOOL | CONT | F | F |
| 4 | 1 | VIBRATING SENSING FORK | MANF | 316 SS | B |
| 5 | 1 | 1" (DN25) ANSI RATED SOCKOLET | CONT | F | F |
| 6 | 1 | 1" (DN25) SPOOL FLUSH / DRAIN BALL VALVE | CONT | F | F |
| 7 | 1 | 1" (DN25) 45° FLUSH / DRAIN ELBOW | CONT | F | F |
| 8 | 1 | 1" (DN25) SCH 40 FLUSH / DRAIN PIPE | CONT | F | F |
| 9 | 1 | SOFT GASKET | CONT | VITON | VITON |
| 10 | AR | 3" FLANGED BALL VALVE WITH MOUNTING HARDWARE | CONT | F | F |
| 11 | 1 | ELECTRONIC HOUSING WITH 1" (25mm) NPT SENSOR EXTENSION | MANF | 316 SS | B |
| 12 | 1 | EXTENSION PIPE | MANF | 316 SS | B |

I-253 VIBRONIC TYPE LEVEL DETECTION SWITCH
REV 010119

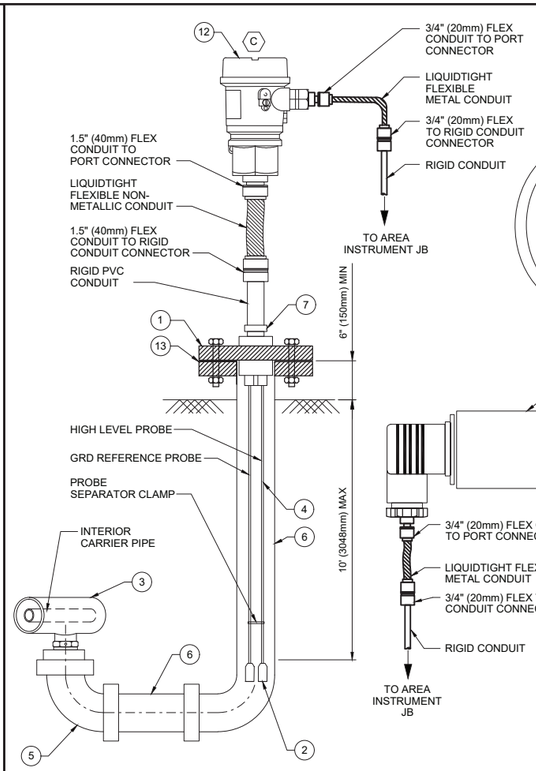


LEAK DETECTION SWITCH - IN BURIED APPLICATION

GENERAL NOTES:

1. POTENTIALLY WETTED MATERIALS SHALL BE CHEMICALLY INERT TO THE PROCESS.
2. REFER TO P&IDS AND DATA SHEETS FOR PROCESS PIPING SIZE AND MATERIAL.
3. REFER TO DIVISION 26 SPECIFICATIONS FOR FLEX AND RIGID CONDUIT MATERIAL AND USAGE LIMITATIONS.
4. DOUBLE CONTAINMENT PIPING AND LEAK DETECTION TRAPS FURNISHED AND INSTALLED BY MECHANICAL CONTRACTOR. INSTRUMENT INSTALLATION SEAL SHALL BE LIQUID-TIGHT.

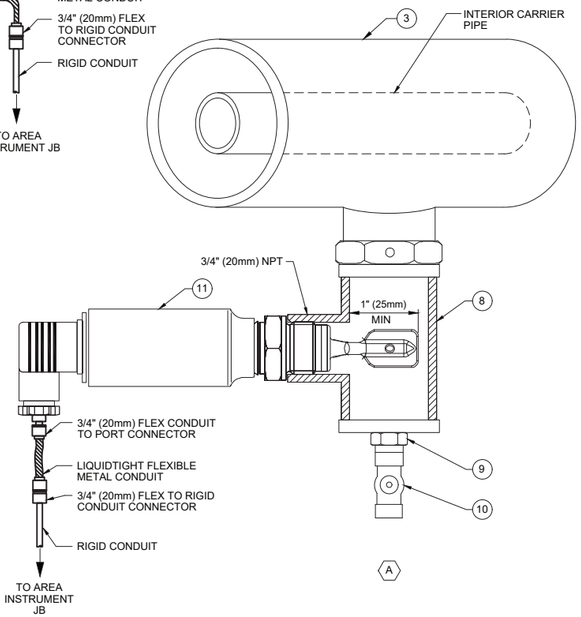


CONTAINMENT LEAK DETECTION SWITCH

KEYNOTES:

A. DIRECT DRAIN TO SAFE LOCATION.
B. INDOOR INSTALLATION: THERMOPLASTIC HOUSING. OUTDOOR INSTALLATION: POWDER COATED ALUMINUM OR OTHER WEATHERPROOF MATERIAL. IF UNAVAILABLE, ENSURE WEATHERSHIELD PROVIDED.
C. WALL OR INSTRUMENT-STAND MOUNT PER DETAIL I-701.

BILL OF MATERIALS

| ITEM | QTY | DESCRIPTION | SUPPLY | MATERIAL/ RATING (WATER) | MATERIAL/ RATING (CHEMICAL) |
|---|---|---|---|---|---|
| 1 | 1 | 4" (DN100) FLANGED PLATE WITH 2" (50mm) NPT THREADED CONNECTION AND MOUNTING HARDWARE | MANF | 304 SS | 304 SS |
| 2 | 2 | CORROSION RESISTANT CONDUCTANCE PROBE WITH TEFLON SHIELD | MANF | - | - |
| 3 | 1 | PVC CONTAINMENT PIPE TEE | CONT | PVC | 316 SS / PVC |
| 4 | 2 | TEFLON INSULATED PROBE CABLE | MANF | - | - |
| 5 | 2 | PVC 90 BEND | CONT | PVC | 316 SS / PVC |
| 6 | AR | PVC PIPE | CONT | PVC | 316 SS / PVC |
| 7 | 1 | 2" NPTM TO 1.5" NPTM BUSHING | CONT | 304 SS | 304 SS |
| 8 | 1 | 2" (50mm) TEE (MIN) | CONT | PVC | 316 SS / PVC |
| 9 | 1 | 3" (75mm) x 1" (25mm) BUSHING | CONT | PVC | 316 SS / PVC |
| 10 | 1 | 1" (25mm) PVC DRAIN BALL VALVE | CONT | PVC | 316 SS / PVC |
| 11 | 1 | VIBRONIC LEAK DETECTION SWITCH (3/4" NPT PROCESS CONNECTOR) | MANF | HOUSING -316 L OR POWDER-COATED ALUMINUM SENSOR - 316 SS | HOUSING - 316 L OR POWDER-COATED ALUMINUM SENSOR - 316SS OR ALLOY C22 |
| 12 | 1 | CONDUCTANCE SWITCH HOUSING | MANF | B | B |
| 13 | 1 | GASKET | CONT | VITON | VITON |

I-254 LEAK DETECTION SWITCH
REV 010119

J-U-B ENGINEERS, INC.
J-U-B ENGINEERS, INC.
392. E. Winchester St., Suite 300
Salt Lake City, UT 84107
Phone: 801.547.0393
www.jub.com

Subconsultant:
Stantec
Stantec
2890 E Cottonwood Pkwy
Suite 300, Salt Lake City, Ut 84121
Tel: +1.801.617.3200
www.stantec.com

AGENCY

REVIEW

REUSE OF DRAWINGS
J-U-B SHALL RETAIN ALL COMMON LAW, STATUTORY, COPYRIGHT AND OTHER RESERVED RIGHTS OF THESE DRAWINGS, AND THE SAME SHALL NOT BE REUSED WITHOUT J-U-B'S PRIOR WRITTEN CONSENT. ANY REUSE WITHOUT WRITTEN CONSENT BY J-U-B WILL BE AT CLIENTS SOLE RISK AND WITHOUT LIABILITY OR LEGAL EXPOSURE TO J-U-B.

| NO. | DESCRIPTION | BY (APP.) | DATE |
|---|---|---|---|
| A | ADDENDUM NO 2 | VBK (BH) | 04/06/2021 |
| | REVISION | | |

SPANISH FORK & MAPELTON WRF
SPANISH FORK CITY CORPORATION

INSTRUMENTATION AND CONTROL
INSTALLATION DETAILS - VII

FILE : 55-20-124 00I-907
JUB PROJ. # : 55-20-124
DRAWN BY: VBK
DESIGN BY: BH
CHECKED BY: SR
ONE INCH
AT FULL SIZE, IF NOT ONE INCH, SCALE ACCORDINGLY
LAST UPDATED: 6/30/2022

DRAWING:
00-I-907

SHEET: 490 OF 691

Plot Date:6/30/2022 8:04 PM Plotted By: Pimradawee Hewage, Ranga
Date Created:8/29/2021 C:\PLANTCAD\HE1813013\9_SPNSH FRK MAPLTN WRF DESIGN\PID DWG\55-20-124_00I-907.DWG

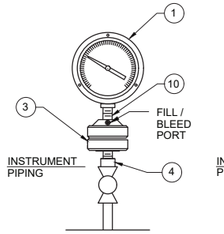


PRESSURE GAUGE OR SWITCH WITH DIAPHRAGM SEAL

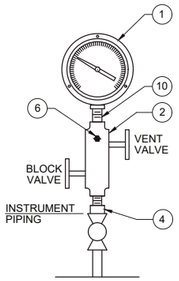


PRESSURE GAUGE OR SWITCH

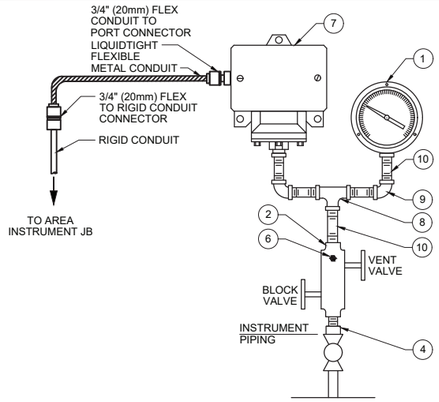


PRESSURE GAUGE AND SWITCH

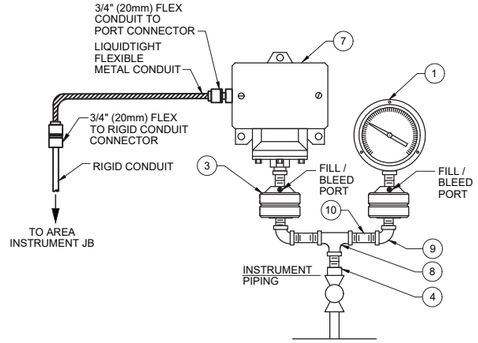


PRESSURE GAUGE AND SWITCH WITH DIAPHRAGM SEALS

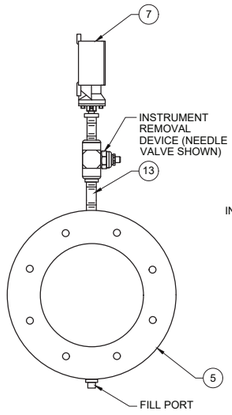


FRONT-VIEW

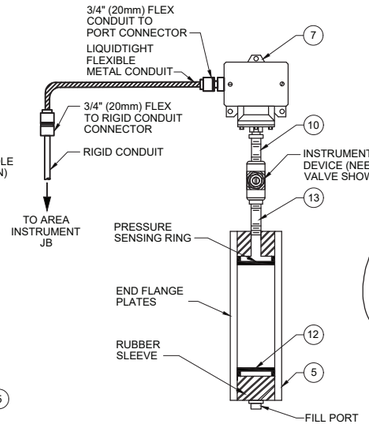


CROSS-SECTION SIDE-VIEW

PRESSURE SWITCH WITH ANNULAR SEAL

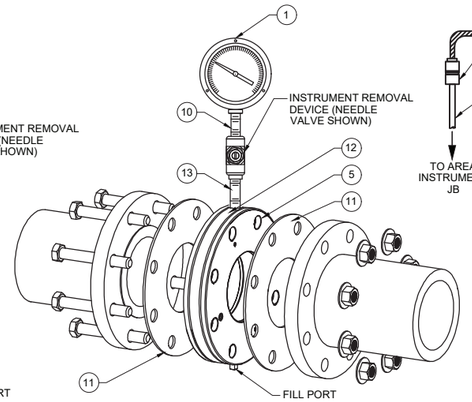


CROSS-SECTION EXPLODED-VIEW

PRESSURE GAUGE WITH ANNULAR SEAL

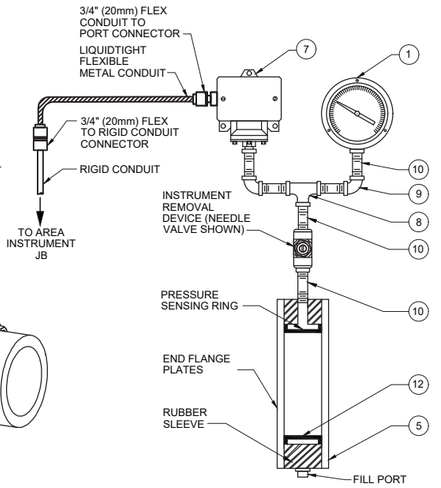


CROSS-SECTION SIDE-VIEW

PRESSURE GAUGE AND SWITCH WITH ANNULAR SEAL

| BILL OF MATERIALS | | | | | |
|---|---|---|---|---|---|
| ITEM | QTY | DESCRIPTION | SUPPLY | MATERIAL/ RATING (WATER / AIR) | MATERIAL/ RATING (CHEMICAL) |
| 1 | 1 | LIQUID-FILLED PRESSURE GAUGE | MANF | PHENOLIC ENCASED | PHENOLIC ENCASED |
| 2 | 1 | 1/2" (15mm) 2 VALVE MANIFOLD WITH INTEGRAL BLEED | MANF | 316 SS | 316 SS OR PVC |
| 3 | AR | ISOLATION DIAPHRAGM SEAL: SILICONE OIL FILL FLUID ⬡A | MANF | 316 SS | HASTELLOY C OR PVC |
| 4 | 1 | HEX REDUCING BUSHING 1"x1/2" (25mmx15mm) | CONT | 316 SS | 316 SS OR PVC |
| 5 | 2 | END FLANGES (CLASS TO SUIT PIPING) | MANF | EPOXY COATED CARBON STEEL | 316 SS OR PVC |
| 6 | 1 | 1/4" NPT VENT PIPE PLUG ⬡B | MANF | 316 SS | 316 SS OR PVC |
| 7 | 1 | PRESSURE SWITCH | MANF | 316 SS | 316 SS OR PVC |
| 8 | 1 | TEE 1/2" (15mm) | CONT | 316 SS | 316 SS OR PVC |
| 9 | 2 | ELBOW 1/2" (15mm) | CONT | 316 SS | 316 SS OR PVC |
| 10 | AR | 1/2" MALE TO MALE NIPPLE | CONT | 316 SS | 316 SS OR PVC |
| 11 | 2 | GASKETS | CONT | VITON | VITON |
| 12 | 1 | ANNULAR SEAL; SILICONE OIL FILL FLUID ⬡A | MANF | TEFLON COATED BUNA-N | PTFE OR TEFLON COATED VITON |
| 13 | 1 | INSTRUMENT REMOVAL DEVICE AND 1/2" STEM | MANF | 316 SS | 316 SS OR PVC |

GENERAL NOTES:

1. POTENTIALLY WETTED MATERIALS SHALL BE CHEMICALLY INERT TO THE PROCESS.
2. REFER TO P&IDS AND DATA SHEETS FOR PROCESS PIPING SIZE AND MATERIAL.
3. PIPING SIDE ISOLATION VALVES FURNISHED AND INSTALLED BY MECHANICAL CONTRACTOR.
4. REFER TO DIVISION 26 SPECIFICATIONS FOR FLEX AND RIGID CONDUIT MATERIAL AND USAGE LIMITATIONS.

⬡ KEYNOTES:

A. FOR AMBIENT TEMPERATURE APPLICATIONS LOWER THAN -10 degC, ETHYLENE GLYCOL FILL FLUID REQUIRED IN LIEU OF STANDARD SILICONE OIL.

B. FURNISH 1/4" (8mm) OD MALE CONNECTOR AND 1/4" OD (1.5mm WALL THICKNESS) 316SS DOWN TURNED DRAIN TUBING FOR FIELD INSTALLATION. ENSURE VENT / DRAIN IS DIRECTED TO SAFE LOCATION.

I-301 PRESSURE GAUGE / SWITCH

REV 010119

Plot Date:5/30/2022 8:04 PM Plotted By: Pinnaduwa-Hewage, Ranga
Date Created:8/29/2021 C:\PLANTCAD\HE1813\01139_SPNSH FRK MAPLTN WRF DESIGN\PID DWG\55-20-124_00I-908.DWG

J-U-B ENGINEERS, INC.
J-U-B ENGINEERS, INC.
392. E. Winchester St., Suite 300
Salt Lake City, UT 84107
Phone: 801.547.0393
www.jub.com

Subconsultant:
Stantec
Stantec
2890 E Cottonwood Pkwy
Suite 300, Salt Lake City, Ut 84121
Tel: +1.801.617.3200
www.stantec.com

AGENCY

REVIEW

REUSE OF DRAWINGS
J-U-B SHALL RETAIN ALL COMMON LAW, STATUTORY, COPYRIGHT AND OTHER RESERVED RIGHTS OF THESE DRAWINGS, AND THE SAME SHALL NOT BE REUSED WITHOUT J-U-B'S PRIOR WRITTEN CONSENT. ANY REUSE WITHOUT WRITTEN CONSENT BY J-U-B WILL BE AT CLIENTS SOLE RISK AND WITHOUT LIABILITY OR LEGAL EXPOSURE TO J-U-B.

| NO. | REVISION | DESCRIPTION | BY (APP.) | DATE |
|---|---|---|---|---|
| A | | ADDENDUM NO 2 | VBK (BH) | 04/06/2021 |

SPANISH FORK & MAPELTON WRF
SPANISH FORK CITY CORPORATION

INSTRUMENTATION AND CONTROL
INSTALLATION DETAILS - VIII

FILE : 55-20-124_00I-908
JUB PROJ. # : 55-20-124
DRAWN BY: VBK
DESIGN BY: BH
CHECKED BY: SR
ONE INCH
AT FULL SIZE, IF NOT ONE INCH, SCALE ACCORDINGLY
LAST UPDATED: 6/30/2022

DRAWING:
00-I-908

SHEET: 491 OF 691

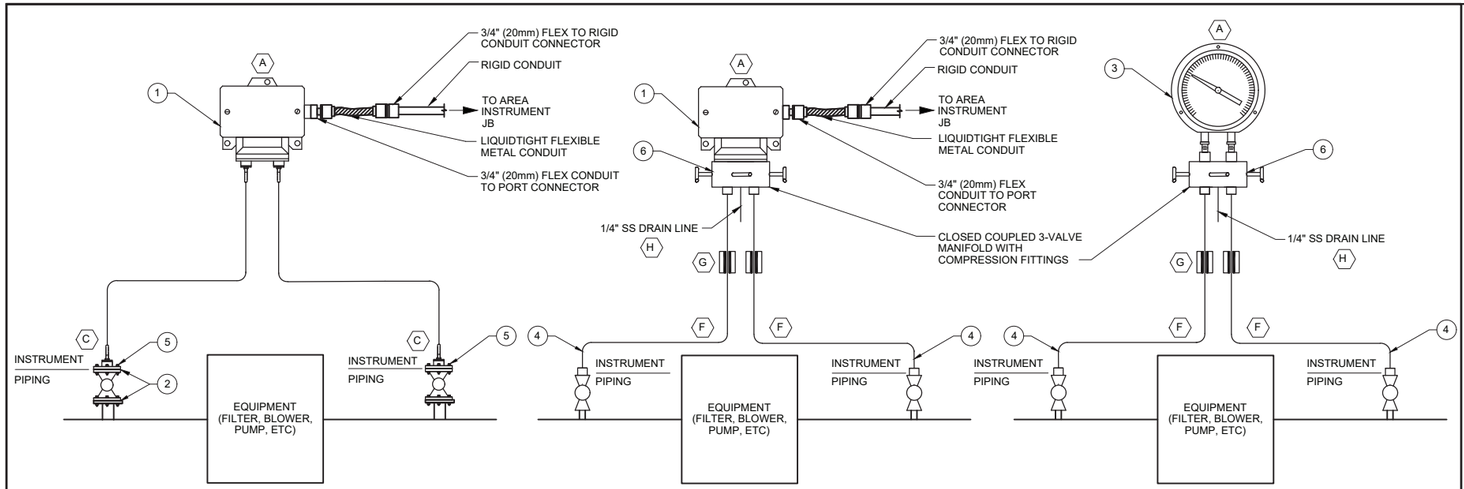


DIFFERENTIAL PRESSURE SWITCH WITH DIAPHRAGM SEALS

DIFFERENTIAL PRESSURE SWITCH

DIFFERENTIAL PRESSURE GAUGE

GENERAL NOTES:

1. REFER TO P&IDS AND DATA SHEETS FOR PROCESS PIPING SIZE AND MATERIAL.
2. PIPING SIDE ISOLATION VALVES FURNISHED AND INSTALLED BY MECHANICAL CONTRACTOR.
3. REFER TO DIVISION 26 SPECIFICATIONS FOR FLEX AND RIGID CONDUIT MATERIAL AND USAGE LIMITATIONS.
4. SEAL ARRANGEMENT: LOW SIDE CONNECTION ON EQUIPMENT INTAKE OR FILTER DISCHARGE; HIGH SIDE CONNECTION ON EQUIPMENT DISCHARGE OR FILTER INTAKE.
5. POTENTIALLY WETTED MATERIALS SHALL BE CHEMICALLY INERT TO THE PROCESS.

KEYNOTES:

A. WALL OR INSTRUMENT-STAND MOUNT PER DETAIL I-701.

B. 316 SS OR HASTELLOY C PREFERRED. HOWEVER ENGINEER APPROVED FINAL SELECTION BASED ON MATERIAL CHEMICAL COMPATIBILITY.

C. DUAL CAPILLARY DIAPHRAGM SEAL SYSTEM.

D. ARMORED CAPILLARIES: 316 SS.
FLANGES: 316 SS OR HASTELLOY C PREFERRED. HOWEVER ENGINEER APPROVED FINAL SELECTION BASED ON MATERIAL CHEMICAL COMPATIBILITY.

E. FOR AMBIENT TEMPERATURE APPLICATIONS LOWER THAN -10 degC, ETHYLENE GLYCOL FILL FLUID REQUIRED IN LIEU OF STANDARD SILICONE OIL.

F. IN GENERAL, FOR GAS APPLICATIONS IMPULSE TUBING SHALL BE SLOPED UP TO THE SWITCH OR GAUGE. FOR LIQUID APPLICATIONS, IMPULSE TUBING SHALL BE SLOPED DOWN TO THE SWITCH OR GAUGE. MINIMUM APPLIED SLOPE SHALL BE 1:12 TUBING LENGTHS SHALL BE APPROXIMATELY EQUALIZED AND KEPT AS SHORT AS POSSIBLE.

G. 1/2" TUBING SHALL BE SUPPORTED / BRACED EVERY 3-FT. THERMALLY INSULATING SPACER MATERIAL SHALL BE APPLIED TO SEPARATE THE TUBING FROM THE SUPPORTS. PIGTAIL LOOP REQUIRED FOR HIGH VIBRATION INSTALLATIONS ONLY.

H. VENT / DRAIN TO SAFE LOCATION (GRADE / DRAIN).

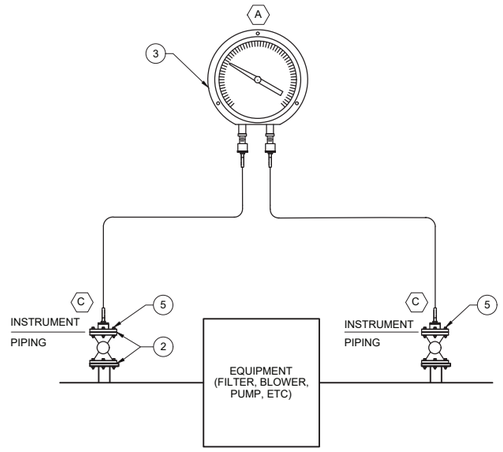


DIFFERENTIAL PRESSURE GAUGE WITH DIAPHRAGM SEALS

BILL OF MATERIALS

| ITEM | QTY | DESCRIPTION | SUPPLY | MATERIAL/ RATING (WATER) | MATERIAL/ RATING (CHEMICAL) |
|---|---|---|---|---|---|
| 1 | 1 | DIFFERENTIAL PRESSURE SWITCH HOUSING | MANF | 316 SS | 316 SS |
| 2 | AR | FLANGE GASKET | CONT | VITON | VITON |
| 3 | 1 | DIFFERENTIAL PRESSURE GAUGE HOUSING | MANF | PHENOLIC-ENCASED | PHENOLIC-ENCASED |
| 4 | AR | IMPULSE TUBING (1/2" (15mm) OD AND 1.5mm WALL THICKNESS) AND COMPRESSION FITTINGS (F) (G) | CONT | 316 SS | (B) |
| 5 | AR | DUAL CAPILLARY DIAPHRAGM SEAL SYSTEM: HIGH SIDE / LOW SIDE SEAL FLANGES (SIZED AND RATED TO MATCH ISOLATION VALVE FLANGE AND PROCESS REQUIREMENTS) EACH WITH INTEGRAL 1/4" (8mm) ARMORED CAPILLARY TUBE (LENGTH AS REQUIRED); SILICONE OIL FILL FLUID. | MANF | 316 SS (FLANGES AND CAPILLARIES) | (D) (E) |
| 6 | 1 | 3 VALVE MANIFOLD WITH DOWNWARD DRAIN LINE | MANF | 316 SS | (B) |

I-302 DIFFERENTIAL PRESSURE SWITCH / GAUGE

REV 010119

J-U-B ENGINEERS, INC.
392. E. Winchester St., Suite 300
Salt Lake City, UT 84107
Phone: 801.547.0393
www.jub.com

Subconsultant:
Stantec
Stantec
2890 E Cottonwood Pkwy
Suite 300, Salt Lake City, Ut 84121
Tel: +1.801.617.3200
www.stantec.com

AGENCY

REVIEW

REUSE OF DRAWINGS
J-U-B SHALL RETAIN ALL COMMON LAW STATUTORY, COPYRIGHT AND OTHER RESERVED RIGHTS OF THESE DRAWINGS, AND THE SAME SHALL NOT BE REUSED WITHOUT J-U-B'S PRIOR WRITTEN CONSENT. ANY REUSE WITHOUT WRITTEN CONSENT BY J-U-B WILL BE AT CLIENTS SOLE RISK AND WITHOUT LIABILITY OR LEGAL EXPOSURE TO J-U-B.

| NO. | DESCRIPTION | BY (APP.) | DATE |
|---|---|---|---|
| A | ADDENDUM NO 2 | VBK (BH) | 04/06/2021 |

REVISION

SPANISH FORK & MAPELTON WRF
SPANISH FORK CITY CORPORATION

INSTRUMENTATION AND CONTROL
INSTALLATION DETAILS - IX

FILE : 55-20-124_00I-909
JUB PROJ. # : 55-20-124
DRAWN BY: VBK
DESIGN BY: BH
CHECKED BY: SR

ONE INCH
AT FULL SIZE, IF NOT ONE INCH, SCALE ACCORDINGLY

LAST UPDATED: 6/30/2022

DRAWING:
00-I-909

SHEET: 492 OF 691

Plot Date:6/30/2022 8:04 PM Plotted By: Pinnaduwa Hewage, Ranga
Date Created:9/29/2021 C:\PLANTCACHE\181301159_SPNSH FRK MAPLTN WRF DESIGN\PID DWG\55-20-124_00I-909.DWG

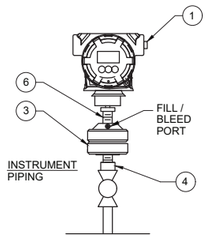


PRESSURE TRANSMITTER WITH DIAPHRAGM SEAL

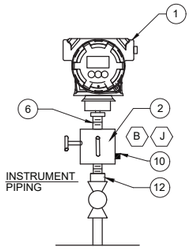


PRESSURE TRANSMITTER

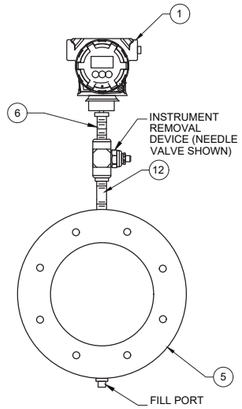


FRONT-VIEW

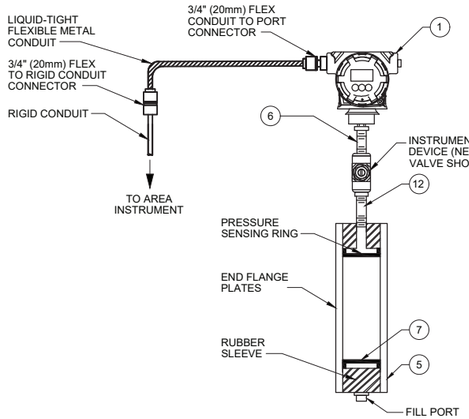


CROSS-SECTION SIDE-VIEW

PRESSURE TRANSMITTER WITH ANNULAR SEAL

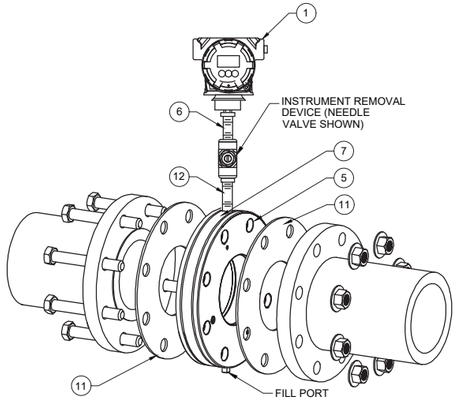


CROSS-SECTION EXPLODED-VIEW

PRESSURE TRANSMITTER WITH ANNULAR SEAL

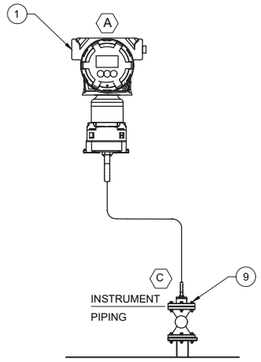


PRESSURE TRANSMITTER WITH CAPILLARY SENSING TUBE

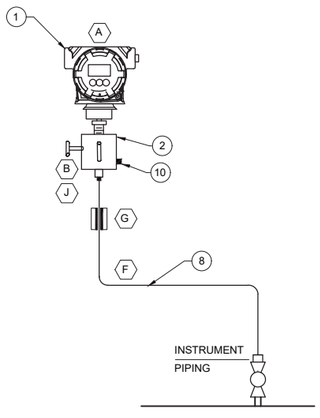


PRESSURE TRANSMITTER- REMOTE MOUNT

GENERAL NOTES:

1. POTENTIALLY WETTED MATERIALS SHALL BE CHEMICALLY INERT TO THE PROCESS.
2. REFER TO P&IDS AND DATA SHEETS FOR PROCESS PIPING SIZE AND MATERIAL.
3. PIPING SIDE ISOLATION VALVES FURNISHED AND INSTALLED BY MECHANICAL CONTRACTOR.
4. REFER TO DIVISION 26 SPECIFICATIONS FOR FLEX AND RIGID CONDUIT MATERIAL AND USAGE LIMITATIONS.

KEYNOTES:

A. WALL OR INSTRUMENT-STAND MOUNT PER DETAIL I-701.

B. FURNISH 1/4" (8mm) OD MALE CONNECTOR AND 1/4" OD (1.5mm WALL THICKNESS) 316SS DOWN-TURNED DRAIN TUBING FOR FIELD INSTALLATION. ENSURE VENT / DRAIN IS DIRECTED TO SAFE LOCATION.

C. CAPILLARY DIAPHRAGM SEAL SYSTEM

D. ARMORED CAPILLARIES: 316 SS.
FLANGE: 316 SS OR HASTELLOY C PREFERRED. HOWEVER ENGINEER APPROVED FINAL SELECTION BASED ON MATERIAL CHEMICAL COMPATIBILITY.

E. FOR AMBIENT TEMPERATURE APPLICATIONS LOWER THAN -10 degC, ETHYLENE GLYCOL FILL FLUID REQUIRED IN LIEU OF STANDARD SILICONE OIL.

F. IN GENERAL, FOR GAS APPLICATIONS IMPULSE TUBING SHALL BE SLOPED UP TO THE SWITCH OR GAUGE. FOR LIQUID APPLICATIONS, IMPULSE TUBING SHALL BE SLOPED DOWN TO THE SWITCH OR GAUGE. MINIMUM APPLIED SLOPE SHALL BE 1:12 TUBING LENGTHS SHALL BE APPROXIMATELY EQUALIZED AND KEPT AS SHORT AS POSSIBLE.

G. 1/2" TUBING SHALL BE SUPPORTED / BRACED EVERY 3-FT. THERMALLY INSULATING SPACER MATERIAL SHALL BE APPLIED TO SEPARATE THE TUBING FROM THE SUPPORTS. PIGTAIL LOOP REQUIRED FOR HIGH VIBRATION INSTALLATIONS ONLY.

H. 316 SS OR HASTELLOY C PREFERRED. HOWEVER ENGINEER APPROVED FINAL SELECTION BASED ON MATERIAL CHEMICAL COMPATIBILITY.

J. VENT / DRAIN TO SAFE LOCATION (GRADE / DRAIN)

BILL OF MATERIALS

| ITEM | QTY | DESCRIPTION | SUPPLY | MATERIAL/ RATING (WATER) | MATERIAL/ RATING (CHEMICAL) |
|---|---|---|---|---|---|
| 1 | 1 | PRESSURE TRANSMITTER ELECTRONIC HOUSING | MANF | EPOXY COATED ALUMINUM | |
| 2 | 1 | 2 VALVE MANIFOLD WITH INTEGRAL BLEED | MANF | 316 SS | 316 SS OR PVC |
| 3 | AR | ISOLATION DIAPHRAGM SEAL; SILICONE OIL FILL FLUID (E) | MANF | 316 SS | HASTELLOY C OR PVC |
| 4 | 1 | HEX REDUCING BUSHING 1"x1/2" (25mmx15mm) | CONT | 316 SS | 316 SS OR PVC |
| 5 | 2 | END FLANGES (CLASS TO SUIT PIPING) | MANF | EPOXY COATED CARBON STEEL | 316 SS OR PVC |
| 6 | AR | 1/2" MALE TO MALE NIPPLE | CONT | 316 SS | 316 SS OR PVC |
| 7 | 1 | ANNULAR SEAL; SILICONE OIL FILL FLUID (E) | MANF | TEFLON COATED BUNA-N | PTFE OR TEFLON COATED VITON |
| 8 | AR | IMPULSE TUBING (1/2" (15mm) OD AND 1.5mm WALL THICKNESS) AND COMPRESSION FITTINGS (F) (G) | CONT | 316 SS | (H) |
| 9 | AR | CAPILLARY DIAPHRAGM SEAL SYSTEM FLANGE (SIZED AND RATED TO MATCH ISOLATION VALVE FLANGE AND PROCESS REQUIREMENTS) WITH INTEGRAL 1/4" (8mm) ARMORED CAPILLARY TUBE (LENGTH AS REQUIRED); SILICONE OIL FILL FLUID. | MANF | 316 SS (FLANGES AND CAPILLARIES) | (D) (E) |
| 10 | 1 | 1/4" NPT VENT PIPE PLUG | MANF | 316 SS | 316 SS OR PVC |
| 11 | 2 | GASKETS | CONT | VITON | VITON |
| 12 | 1 | INSTRUMENT REMOVAL DEVICE AND 1/2" STEM | MANF | 316 SS | 316 SS OR PVC |

I-303 PRESSURE TRANSMITTER
REV 010119


REUSE OF DRAWINGS
J-U-B SHALL RETAIN ALL COMMON LAW STATUTORY, COPYRIGHT AND OTHER RESERVED RIGHTS OF THESE DRAWINGS, AND THE SAME SHALL NOT BE REUSED WITHOUT J-U-B'S PRIOR WRITTEN CONSENT. ANY REUSE WITHOUT WRITTEN CONSENT BY J-U-B WILL BE AT CLIENTS SOLE RISK AND WITHOUT LIABILITY OR LEGAL EXPOSURE TO J-U-B.


| NO. | DESCRIPTION | BY (APP.) | DATE |
|---|---|---|---|
| A | ADDENDUM NO 2 | VBK (BH) | 04/06/2021 |

REVISION


J-U-B ENGINEERS, INC.
J-U-B ENGINEERS, INC.
392. E. Winchester St., Suite 300
Salt Lake City, UT 84107
Phone: 801.547.0393
www.jub.com

Subconsultant:
Stantec
Stantec
2890 E Cottonwood Pkwy
Suite 300, Salt Lake City, Ut 84121
Tel: +1.801.617.3200
www.stantec.com


AGENCY

REVIEW

SPANISH FORK & MAPELTON WRF
SPANISH FORK CITY CORPORATION

INSTRUMENTATION AND CONTROL
INSTALLATION DETAILS - X

FILE: 55-20-124_00I-910
JUB PROJ. #: 55-20-124
DRAWN BY: VBK
DESIGN BY: BH
CHECKED BY: SR
ONE INCH
AT FULL SIZE, IF NOT ONE INCH, SCALE ACCORDINGLY
LAST UPDATED: 6/30/2022

DRAWING:
00-I-910

SHEET: 493 OF 691


Plot Date:6/30/2022 8:04 PM, Plotted By: Pinnaduwa-Hewage, Ranga
Date Created:8/29/2021 C:\PLANTCAD\HE1813\01139_SPNSH FRK MAPLTN WRF DESIGN\PID DWG\55-20-124_00I-910.DWG

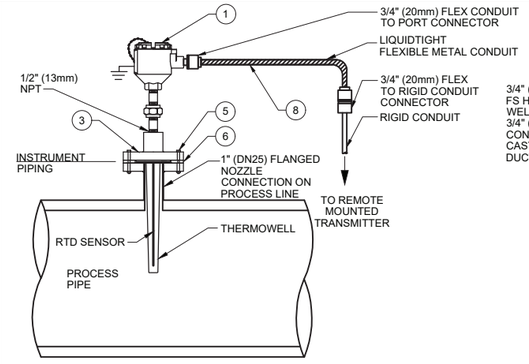


PIPE INSTALLED - INTEGRAL MOUNTED TEMPERATURE TRANSMITTER (FLANGED THERMOWELL)

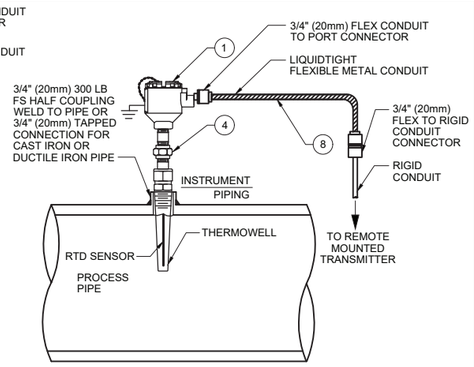


PIPE INSTALLED - INTEGRAL MOUNTED TEMPERATURE TRANSMITTER (THREADED THERMOWELL)

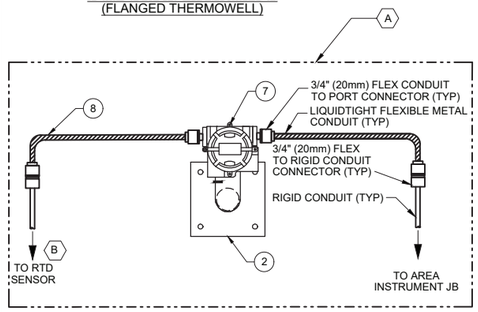


REMOTE MOUNTED TEMPERATURE TRANSMITTER FRONT VIEW

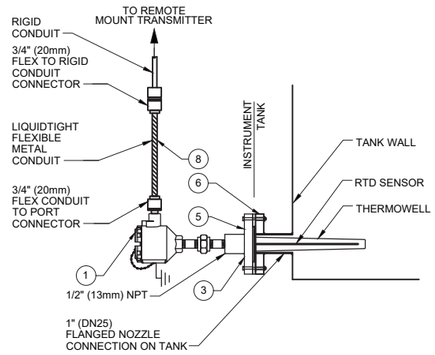


TANK INSTALLED - INTEGRAL MOUNTED TEMPERATURE TRANSMITTER

GENERAL NOTES:

1. PROVIDE MECHANICAL SUPPORT AND FITTINGS FOR ROUTED CONDUIT.
2. REFER TO P&IDS AND DATA SHEETS FOR PROCESS PIPING SIZE AND MATERIAL.
3. REFER TO MECHANICAL SECTIONS AND TANK DATA SHEETS FOR FLANGED NOZZLE SIZE AND MATERIAL.
4. WETTED MATERIALS SHALL BE CHEMICALLY INERT TO THE PROCESS.
5. REFER TO DIVISION 26 SPECIFICATIONS FOR FLEX AND RIGID CONDUIT MATERIAL AND USAGE LIMITATIONS.
6. USE SPRING-LOADED PROBE FOR THERMOWELL INSTALLATION.
7. APPLY SEALANT TO MALE THREADS.

KEYNOTES:

A. WALL OR INSTRUMENT-STAND MOUNT PER DETAIL I-701.
B. SENSOR CABLE SPLICE OF ANY KIND SHALL NOT BE ACCEPTABLE.
C. HASTELLOY C PREFERRED. HOWEVER ENGINEER APPROVED FINAL SELECTION BASED ON PRESSURE, FLOW VELOCITY AND MATERIAL CHEMICAL COMPATIBILITY.
D. INSERTION LENGTH: HALF PIPE DIAMETER OR 4-INCHES, WHICHEVER IS SHORTER.

BILL OF MATERIALS

| ITEM | QTY | DESCRIPTION | SUPPLY | MATERIAL/ RATING (WATER) | MATERIAL/ RATING (CHEMICAL) |
|---|---|---|---|---|---|
| 1 | 1 | ELECTRONIC HOUSING | MANF | EPOXY COATED ALUMINUM | EPOXY COATED ALUMINUM |
| 2 | 1 | MOUNTING SUPPORT BRACKET AND HARDWARE. | CONT | 316 SS | 316 SS |
| 3 | 1 | TEMPERATURE ELEMENT ASSEMBLY, 1"(25mm) FLANGED TAPERED THERMOWELL | MANF | 316 SS | C |
| 4 | 1 | TEMPERATURE ELEMENT ASSEMBLY, 1/2" (15mm) NPT TAPERED THERMOWELL | MANF | 316 SS | C |
| 5 | 4 | BOLTS, WASHER + NUTS | MANF | 316 SS | 316 SS |
| 6 | 1 | GASKET | CONT | VITON | VITON |
| 7 | 1 | TRANSMITTER HOUSING | MANF | EPOXY COATED ALUMINUM | EPOXY COATED ALUMINUM |
| 8 | AS REQ. | TRIAD RTD EXTENSION CABLE (WITHIN CONDUIT) | CONT | PER DIV 26 | - |

I-401 TEMPERATURE TRANSMITTER
REV 010119

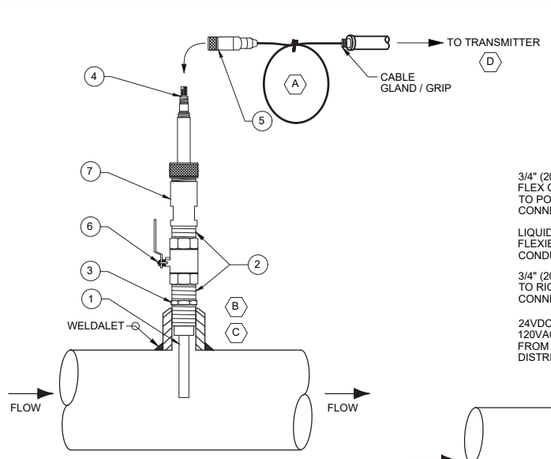


pH, CHLORINE, DISSOLVED OXYGEN, AND OZONE SENSOR RECOMMENDED MOUNTING ORIENTATION

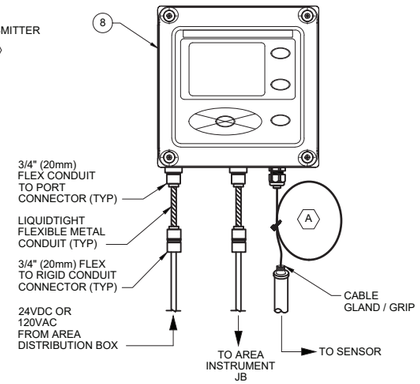


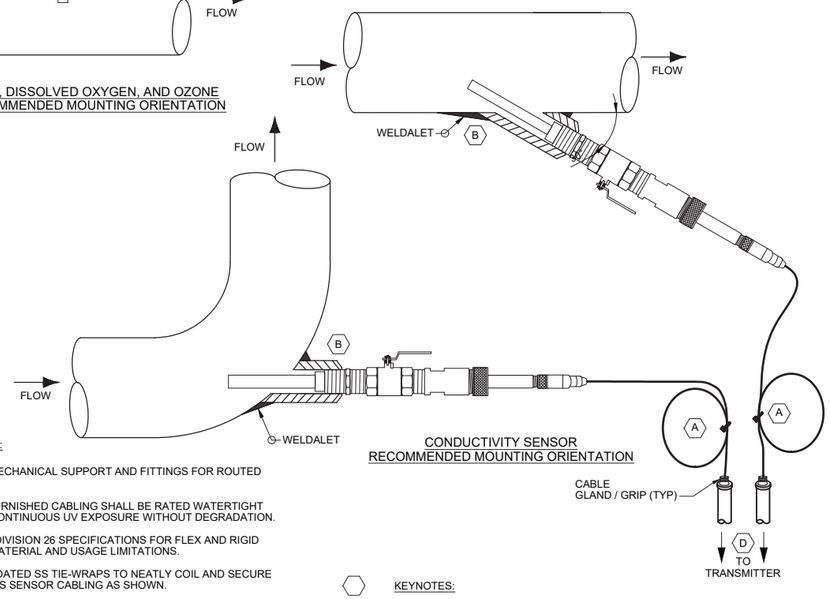


CONDUCTIVITY SENSOR RECOMMENDED MOUNTING ORIENTATION

GENERAL NOTES:

1. PROVIDE MECHANICAL SUPPORT AND FITTINGS FOR ROUTED CONDUIT.
2. VENDOR FURNISHED CABLING SHALL BE RATED WATERTIGHT AND FOR CONTINUOUS UV EXPOSURE WITHOUT DEGRADATION.
3. REFER TO DIVISION 26 SPECIFICATIONS FOR FLEX AND RIGID CONDUIT MATERIAL AND USAGE LIMITATIONS.
4. USE PVC COATED SS TIE-WRAPS TO NEATLY COIL AND SECURE ANY EXCESS SENSOR CABLING AS SHOWN.
5. WRAP THE SENSOR THREADS WITH PIPE TAPE BEFORE INSERTING INTO MOUNTING.
6. RETRACTION ASSEMBLY COMPONENTS SIZED TO ACCOMMODATE SENSOR DIAMETER.
7. MAXIMUM RETRACTION PRESSURE TYPICALLY LIMITED TO APPROXIMATELY 64psi / 440Kpa (OR PER MANUFACTURER DEFINED LIMIT). FOR APPLICATIONS REQUIRING GREATER RETRACTION PRESSURE (BUT LESS THAN 290psi or 2000Kpa), A SUPPORT DRIVE SCREW (AS OFFERED BY THE MANUFACTURER) SHALL BE REQUIRED.

KEYNOTES:

A. MAINTENANCE LOOP SHALL INCLUDE 3FT (1 M) LENGTH OF CABLE SECURED WITH PVC-COATED SS TIE WRAPS, BEND RADIUS NO LESS THAN 8" (200mm).
B. ENSURE MIN OF 1/4" CLEARANCE BETWEEN SENSOR AND PIPE WALL.
C. THE ELECTRODES MUST BE COMPLETELY SUBMERGED IN THE PROCESS LIQUID TO ENSURE PROPER MEASUREMENT.
D. MAX CABLE LENGTH: 50 ft (15M) OR PER MANF. SPECIFICATION.

BILL OF MATERIALS

| ITEM | QTY | DESCRIPTION | SUPPLY | MATERIAL/ RATING (WATER) | MATERIAL/ RATING (CHEMICAL) |
|---|---|---|---|---|---|
| 1 | 1 | SENSOR AND SENSOR INSERTION TUBE | MANF | PER DATASHEET / SPEC | PER DATASHEET / SPEC |
| 2 | 1 | CLOSE NIPPLE | MANF | 316 SS | 316 SS / TITANIUM |
| 3 | 1 | ADAPTER FITTING | MANF | 316 SS | 316 SS / TITANIUM |
| 4 | 1 | VARIOPOLE PLUG (MALE) CONNECTOR | MANF | PER MANF | PER MANF |
| 5 | 1 | FACTORY PREPARED SHIELDED SENSOR CABLE WITH VARIOPOL CONNECTOR (LENGTH AS REQ) D | MANF | PVC JACKET | PVC JACKET |
| 6 | 1 | NPT FULL PORT BALL VALVE | MANF | 316 SS | 316 SS / TITANIUM |
| 7 | 1 | RETRACTION CHAMBER | MANF | 316 SS | 316 SS / TITANIUM |
| 8 | 1 | REMOTE TRANSMITTER WITH DISPLAY | MANF | POLYCARBONATE | POLYCARBONATE |

I-501 INLINE ANALYZER - GENERIC
(CONVERTIBLE STYLE SENSOR BALL VALVE MOUNTING)
REV 010119

J-U-B ENGINEERS, INC.
J-U-B ENGINEERS, INC.
392. E. Winchester St., Suite 300
Salt Lake City, UT 84107
Phone: 801.547.0393
www.jub.com

Subconsultant:
Stantec
Stantec
2890 E Cottonwood Pkwy
Suite 300, Salt Lake City, Ut 84121
Tel: +1.801.617.3200
www.stantec.com

AGENCY

REVIEW

REUSE OF DRAWINGS
J-U-B SHALL RETAIN ALL COMMON LAW, STATUTORY, COPYRIGHT AND OTHER RESERVED RIGHTS OF THESE DRAWINGS, AND THE SAME SHALL NOT BE REUSED WITHOUT J-U-B'S PRIOR WRITTEN CONSENT. ANY REUSE WITHOUT WRITTEN CONSENT BY J-U-B WILL BE AT CLIENTS SOLE RISK AND WITHOUT LIABILITY OR LEGAL EXPOSURE TO J-U-B.

| NO. | REVISION / DESCRIPTION | BY (APP.) | DATE |
|---|---|---|---|
| A | ADDENDUM NO 2 | VBK BH | 04/06/2021 |

SPANISH FORK & MAPELTON WRF
SPANISH FORK CITY CORPORATION

INSTRUMENTATION AND CONTROL
INSTALLATION DETAILS - XI

FILE : 55-20-124_00I-911
JUB PROJ. # : 55-20-124
DRAWN BY: VBK
DESIGN BY: BH
CHECKED BY: SR
ONE INCH
AT FULL SIZE, IF NOT ONE INCH, SCALE ACCORDINGLY
LAST UPDATED: 6/30/2022

DRAWING:
00-I-911

SHEET: 494 OF 691

Plot Date:6/30/2022 8:04 PM Plotted By: Pinnduwa-Hewage, Ranga
Date Created:8/29/2021 C:\PLANTCAD\HE1181301139_SPNSH FRK MAPLTN WRF DESIGN\PID DWG\55-20-124_00I-911.DWG

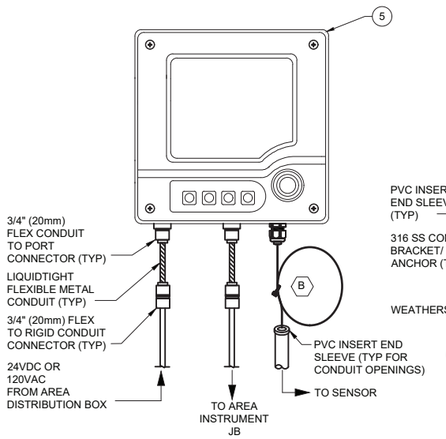


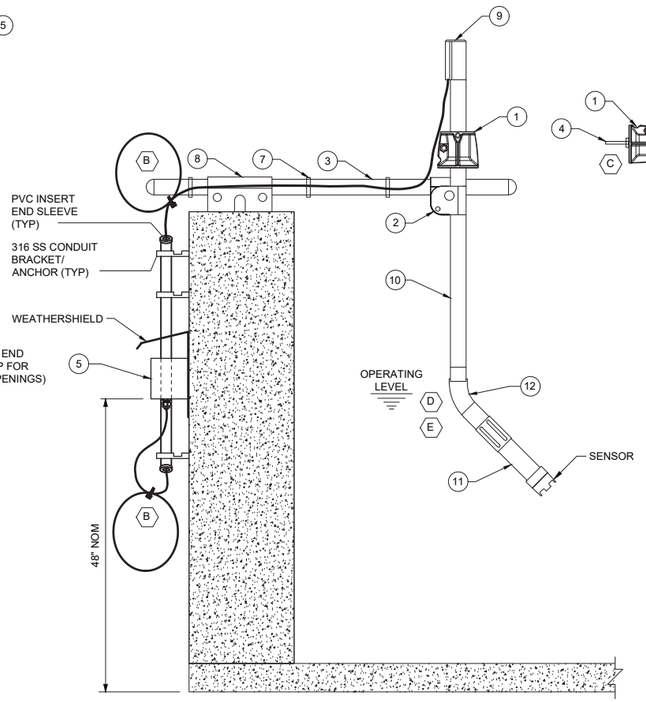


SURFACE MOUNT WITH RIGID
IMMERSION PIPE SUPPORT SYSTEM

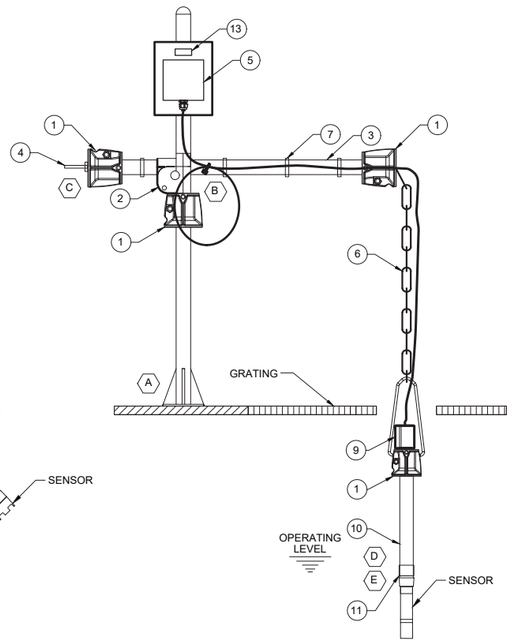


INSTRUMENT STAND MOUNT WITH
CHAIN SUPPORT SYSTEM

GENERAL NOTES:

1. PROVIDE MECHANICAL SUPPORT AND FITTINGS FOR ROUTED CONDUIT.
2. VENDOR FURNISHED CABLING SHALL BE RATED WATERTIGHT AND FOR CONTINUOUS UV EXPOSURE WITHOUT DEGRADATION.
3. REFER TO DIVISION 26 SPECIFICATIONS FOR FLEX AND RIGID CONDUIT MATERIAL AND USAGE LIMITATIONS.
4. USE PVC COATED SS TIE-WRAPS TO NEATLY COIL AND SECURE ANY EXCESS SENSOR CABLING AS SHOWN.

KEYNOTES:

A. REFER TO INSTRUMENT STAND DETAIL I-701 (AND SUNSHIELD DETAIL I-702 AS APPLICABLE).

B. MAINTENANCE LOOP SHALL INCLUDE 3FT (1M) LENGTH OF CABLE SECURED WITH PVC-COATED SS TIE WRAPS, BEND RADIUS NO LESS THAN 8" (200mm).

C. THE TRIANGLE CARABINEER SECURES THE CHAIN AT THE END OF THE PIPE. IT IS USED TO ADJUST THE IMMERSION DEPTH OF THE ASSEMBLY.

D. SUBMERGE SENSOR 12" BELOW MINIMUM NORMAL OPERATING LEVEL.

E. PROCESS LIQUID SHOULD NOT BE PERMITTED TO ENTER THE IMMERSION PIPE.

BILL OF MATERIALS

| ITEM | QTY | DESCRIPTION | SUPPLY | MATERIAL/RATING (WATER) | MATERIAL/RATING (CHEMICAL) |
|---|---|---|---|---|---|
| 1 | 1 | MULTIFUNCTION CLAMP RING | MANF | 316 SS | 316 SS |
| 2 | 1 | CROSS CLAMP (HOLDING THE TRANSVERSE PIPE) | MANF | 316 SS | 316 SS |
| 3 | 1 | TRANSVERSE PIPE 40" (1000mm) | MANF | 316 SS | 316 SS |
| 4 | 1 | TRIANGLE CARABINEER (FOR CHAIN ADJUSTMENT) | MANF | 316 SS | 316 SS |
| 5 | 1 | REMOTE TRANSMITTER WITH DISPLAY | MANF | POLYCARBONATE | POLYCARBONATE |
| 6 | 1 | SUPPORT CHAIN | MANF | 316 SS | 316 SS OR PVC |
| 7 | AR | HOOK AND LOOP CABLE TIES | CONT | BLACK NYLON | BLACK NYLON |
| 8 | 1 | FLAT SURFACE MOUNT CLAMP AND MOUNTING HARDWARE | MANF | 316 SS | 316 SS |
| 9 | 1 | SPLASH PROTECTION CAP | MANF | 316 SS | 316 SS OR PVC |
| 10 | 1 | IMMERSION PIPE (LENGTH AS REQUIRED) | MANF | 316 SS | 316 SS OR PVC |
| 11 | 1 | SENSOR ADAPTER 3/4" NPT (20 mm) | MANF | 316 SS | 316 SS OR PVC |
| 12 | 1 | CONNECTION KNEE 45° | MANF | 316 SS | 316 SS OR PVC |
| 13 | 1 | NAMEPLATE | MANF | PER DATASHEET | PER DATASHEET |

I-502 TANK MOUNT IN-SITU ANALYTICAL - GENERIC
REV 010119

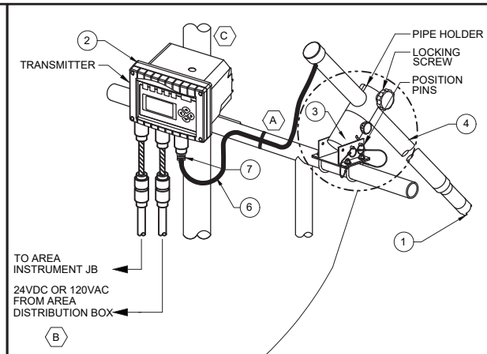


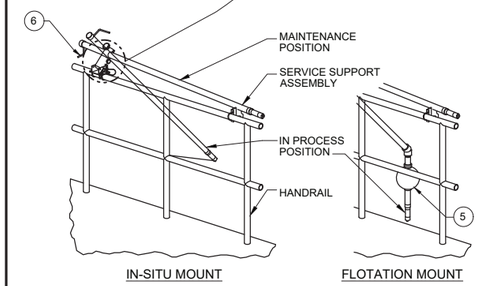


GENERAL NOTES:

1. ENSURE PROBE TIP IS SUBMERGED 1-FT BELOW SURFACE.
2. REFER TO DIVISION 26 SPECIFICATIONS FOR FLEX AND RIGID CONDUIT MATERIAL AND USAGE LIMITATATIONS.
3. USE BLACK NYLON TIE-WRAPS TO SECURE SENSOR CABLING.

KEYNOTES:

A. TIE WRAP SENSOR CABLE TO HANDRAIL EVERY 12-INCHES LEAVING SUFFICIENT SLACK TO SUPPORT EASY TRANSITION FROM MAINTENANCE TO SERVICE.

B. ONLY REQUIRED FOR 4-WIRE INSTRUMENTS.

C. MOUNT TRANSMITTER / DISPLAY, ON STANDARD INSTRUMENT STAND PER DETAIL I-701 / 702. SUNSHIELD REQUIRED FOR OUTDOOR INSTALLATIONS.

BILL OF MATERIALS

| ITEM | QTY | DESCRIPTION | SUPPLY | MATERIAL/ RATING (WATER) | MATERIAL/ RATING (CHEMICAL) |
|---|---|---|---|---|---|
| 1 | 1 | SENSOR | MANF | PER VENDOR | PER VENDOR |
| 2 | 1 | TRANSMITTER | MANF | POWDER COATED ALUMINIUM | POWDER COATED ALUMINIUM |
| 3 | 1 | PIPE AND SWIVEL LOCKING SCREWS | MANF | 316 SS | 316 SS |
| 4 | 1 | 1 1/2" (40mm) DIA EXTENSION PIPE; LENGTH AS REQUIRED | MANF | PVC | PVC |
| 5 | 1 | FLOAT | MANF | PVC | PVC |
| 6 | 1 | SENSOR CABLE; LENGTH AS REQUIRED | MANF | PER VENDOR | PER VENDOR |
| 7 | 1 | SENSOR CABLE GRIP | MANF | PVC | PVC |

I-504 RAIL-MOUNT IN-SITU ANALYTICAL - GENERIC
(TYPICAL FOR DO, pH, CONDUCTIVITY AND ORP IN-SITU PROBES)
REV 010119

REUSE OF DRAWINGS:
J-U-B SHALL RETAIN ALL COMMON LAW, STATUTORY, COPYRIGHT AND OTHER RESERVED RIGHTS OF THESE DRAWINGS, AND THE SAME SHALL NOT BE REUSED WITHOUT J-U-B'S PRIOR WRITTEN CONSENT. ANY REUSE WITHOUT WRITTEN CONSENT BY J-U-B WILL BE AT CLIENTS SOLE RISK AND WITHOUT LIABILITY OR LEGAL EXPOSURE TO J-U-B.

| NO. | REVISION | BY (APP.) | DATE |
|---|---|---|---|
| A | ADDENDUM NO 2 | VBK (BH) | 04/06/2021 |

J-U-B ENGINEERS, INC.
J-U-B ENGINEERS, INC.
392 E. Winchester St., Suite 300
Salt Lake City, UT 84107
Phone: 801.547.0393
www.jub.com

Subconsultant:
Stantec
Stantec
2890 E Cottonwood Pkwy
Suite 300, Salt Lake City, Ut
84121
Tel: +1.801.617.3200
www.stantec.com

AGENCY

REVIEW

SPANISH FORK & MAPELTON WRF
SPANISH FORK CITY CORPORATION

INSTRUMENTATION AND CONTROL
INSTALLATION DETAILS - XII

FILE : 55-20-124_001-912
JUB PROJ. # : 55-20-124
DRAWN BY: VBK
DESIGN BY: BH
CHECKED BY: SR
ONE INCH
AT FULL SIZE, IF NOT ONE INCH, SCALE ACCORDINGLY
LAST UPDATED: 6/30/2022

DRAWING:
00-I-912

SHEET: 495 OF 691

Plot Date:6/30/2022 8:04 PM, Plotted By: Pinnaduwa-Hewage, Ranga
Date Created:8/29/2021 C:\PLANTCAD\HE\181301\39_SPNSH FRK MAPLTN WRF DESIGN\PID DWG\55-20-124_001-912.DWG

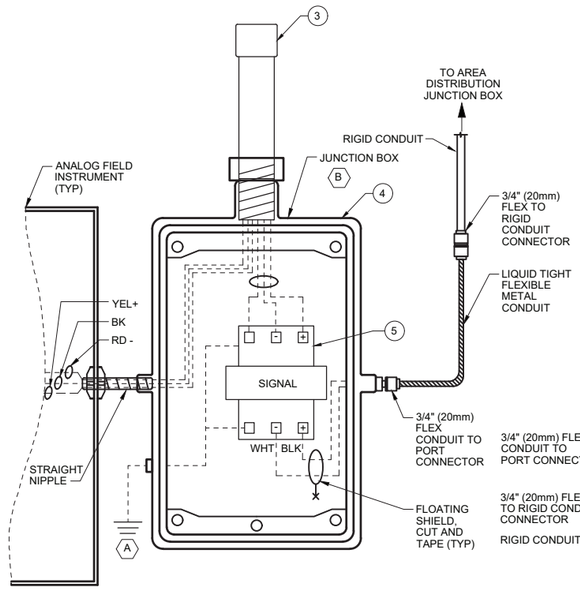


ANALOG SIGNAL SURGE ARRESTOR
(LOOP POWERED INSTRUMENTS)

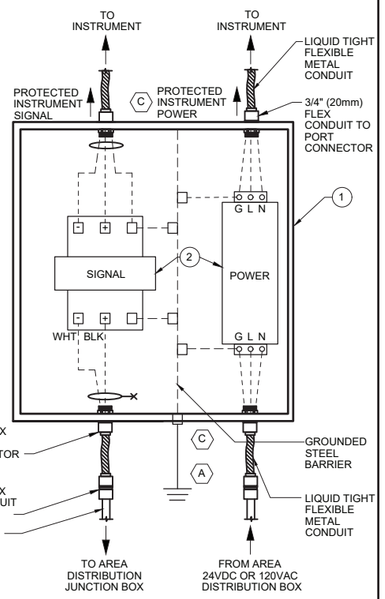


ANALOG SIGNAL SURGE ARRESTOR
(FOUR WIRE INSTRUMENTS)

GENERAL NOTES:

1. PROVIDE MECHANICAL SUPPORT AND FITTINGS FOR ROUTED CONDUIT.
2. REFER TO DIVISION 26 SPECIFICATIONS FOR FLEX AND RIGID CONDUIT MATERIAL AND USAGE LIMITATIONS.
3. JUNCTION BOXES AND ENCLOSURES NEMA RATING TO MEET INSTALL ENVIRONMENT PER DIV 40 SPECIFICATIONS .

KEYNOTES:

A. SOLID COPPER GROUND WIRE SHALL NOT EXCEED 5 Ohm RESISTANCE OR 120" (3 METER) DISTANCE TO THE GROUND.

B. JUNCTION BOX ONLY REQUIRED IF SPARE PORT NOT AVAILABLE ON INSTRUMENT TRANSMITTER HOUSING.

C. DO NOT CROSS SIGNAL AND POWER CABLES.

BILL OF MATERIALS

| ITEM | QTY | DESCRIPTION | SUPPLY | MATERIAL/ RATING (WATER) | MATERIAL/ RATING (CHEMICAL) |
|---|---|---|---|---|---|
| 1 | 1 | NEMA RATED ENCLOSURE MOUNTED ON INSTRUMENT STAND | CONT | 316 SS | 316 SS |
| 2 | AR | DIN-RAIL MOUNTED SIGNAL AND AC POWER SURGE SUPPRESSOR / FILTER | MANF | - | - |
| 3 | 1 | MULTISTAGE SIGNAL SURGE SUPPRESSOR HOUSING. THREADED FITTING. | MANF | 316 SS | 316 SS |
| 4 | 1 | NEMA RATED JUNCTION BOX (C) | CONT | 316 SS | 316 SS |
| 5 | 1 | DIN-RAIL MOUNTED TERMINAL BLOCK | CONT | PER DIV 26 SPEC | PER DIV 26 SPEC |

I-602 FIELD INSTRUMENT SIGNAL SURGE ARRESTOR (LSA)

REV 010119


J-U-B ENGINEERS, INC.

J-U-B ENGINEERS, INC.
392. E. Winchester St., Suite 300
Salt Lake City, UT 84107
Phone: 801.547.0393
www.jub.com

Subconsultant:

Stantec
Stantec
2890 E Cottonwood Pkwy
Suite 300, Salt Lake City, Ut
84121
Tel: +1.801.617.3200
www.stantec.com


AGENCY

REVIEW


REUSE OF DRAWINGS
J-U-B SHALL RETAIN ALL COMMON LAW STATUTORY, COPYRIGHT AND OTHER RESERVED RIGHTS OF THESE DRAWINGS, AND THE SAME SHALL NOT BE REUSED WITHOUT J-U-B'S PRIOR WRITTEN CONSENT. ANY REUSE WITHOUT WRITTEN CONSENT BY J-U-B WILL BE AT CLIENTS SOLE RISK AND WITHOUT LIABILITY OR LEGAL EXPOSURE TO J-U-B.


| NO. | DESCRIPTION | BY (APP.) | DATE |
|---|---|---|---|
| A | ADDENDUM NO 2 | VBK BH | 04/06/2021 |

REVISION

SPANISH FORK & MAPELTON WRF
SPANISH FORK CITY CORPORATION

INSTRUMENTATION AND CONTROL
INSTALLATION DETAILS - XIII

FILE : 55-20-124_00I-913
JUB PROJ. # : 55-20-124
DRAWN BY: VBK
DESIGN BY: BH
CHECKED BY: SR
ONE INCH
AT FULL SIZE, IF NOT ONE INCH, SCALE ACCORDINGLY
LAST UPDATED: 6/30/2022

DRAWING:
00-I-913

SHEET: 496 OF 691


Plot Date:6/30/2022 8:04 PM Plotted By: Pinnaduwa-Hewage, Ranga
Date Created:8/29/2021 C:\PLANTCAD\HE1813011\39_SPNSH FRK MAPLTN WRF DESIGN\PID DWGS\55-20-124_00I-913.DWG

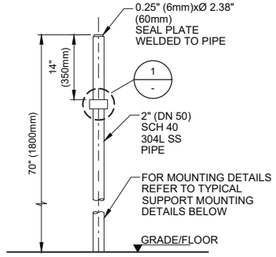


GRADE / FLOOR MOUNTED

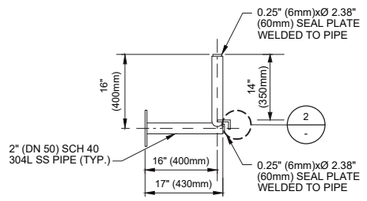


WALL / COLUMN MOUNTED

SINGLE INSTRUMENT SUPPORT (B) (F)

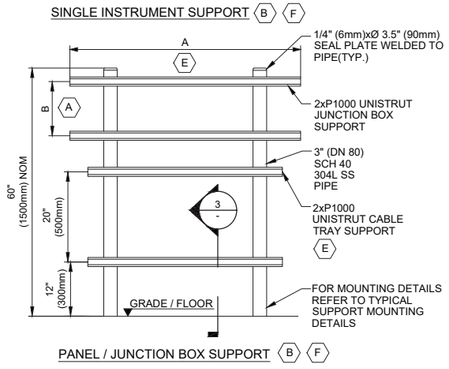


PANEL / JUNCTION BOX SUPPORT (B) (F)

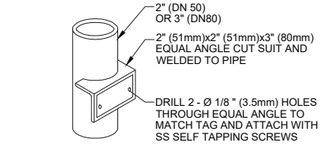


1 - DETAIL

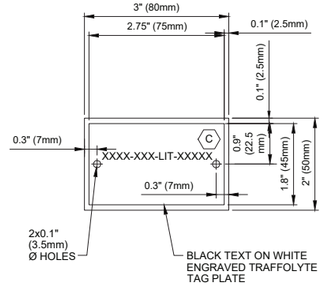


INSTRUMENT TAG AND MOUNTING PLATE (B) (F)

2 - DETAIL

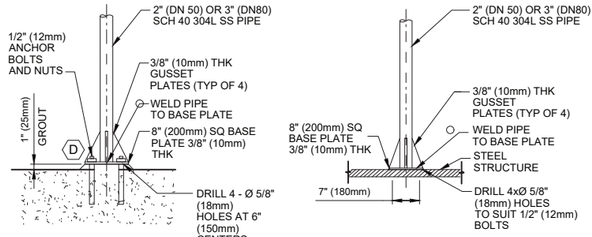


CONCRETE SLAB MOUNTING

STEEL STRUCTURE MOUNTING

GENERAL NOTES:

1. INSTRUMENT DISPLAY SHALL BE SITUATED 48" (1220mm) ABOVE GRADE. REQUEST FOR DEVIATION SHALL BE SUBMITTED IN WRITING TO THE ENGINEER FOR APPROVAL.
2. REFER TO WEATHER SHIELD INSTALLATION DETAILS I-702 FOR WEATHER SHIELD SPECIFICS AND ADDITIONAL INSTALLATION REQUIREMENTS.
3. AFTER FABRICATION REMOVE ALL SHARP EDGES, BURRS ETC.
4. ALL WELDS SHALL BE 0.2" (6mm) CONTINUOUS FILLET WELDS FULL PERIMETER UNLESS NOTED OTHERWISE.
5. STANDS ARE TYPICAL; SITE MODIFICATION MAY BE NECESSARY TO ACCOMMODATE INSTALLATION.

KEYNOTES:

A. DIMENSION "B" TO SUIT JUNCTION BOX MOUNTING BRACKETS.
B. ALL HEAT AFFECTED WELD AREAS TO BE PAINTED WITH ZINC CHROMATE.
C. REFER TO PROJECT INSTRUMENT SCHEDULE FOR TAG NUMBERING DETAILS.
D. BASEPLATES TO BE FIXED TO CONCRETE USING 1/2" (12mm) 316 SS ANCHOR BOLTS (QTY=4) USING MULTI EPOXY ADHESIVE ANCHORS. IF CONCRETE THICKNESS IS INSUFFICIENT FOR MOUNTING VERTICAL BASE PLATES, EMPLOY A THROUGH BOLTED CONNECTION.
E. DIMENSION "A" LENGTH AND CABLE TRAY SUPPORT LENGTH AS REQUIRED TO SUIT NUMBER OF JUNCTION BOXES OR CONTROL PANELS.
F. SUPPORT ASSEMBLY SHALL BE HOT DIP GALVANIZED AFTER FABRICATION.

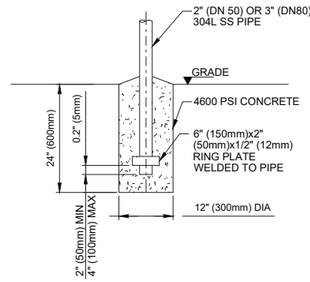


YARD MOUNTING

TYPICAL SUPPORT MOUNTING DETAILS

3 - SECTION

I-701 INSTRUMENT STAND
REV 010119

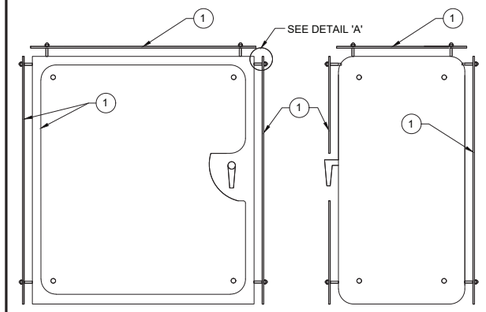


OUTDOOR-MOUNTED CONTROL PANEL SUNSHIELD (FRONT VIEW)

OUTDOOR-MOUNTED CONTROL PANEL SUNSHIELD (SIDE VIEW)

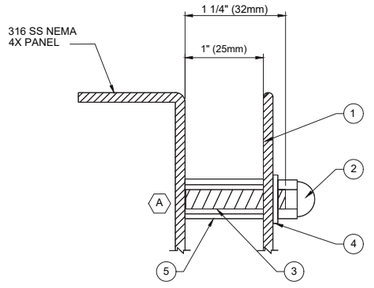


DETAIL"A"

GENERAL NOTES:

1. SUNSHIELD SHALL BE REQUIRED FOR ALL OUTDOOR CONTROL PANELS UNLESS SPECIFICALLY NOTED OTHERWISE.
2. SUNSHIELD PANEL CORNERS MUST BE ROUNDED AND ALL EDGES GROUND SMOOTH, COMPLETELY DE-BURRED.

KEYNOTES:

A. STAINLESS STEEL STUDS SHALL BE WELDED ONTO PANEL EXTERIOR. PENETRATION OF THE PANEL TO SUPPORT SUNSHIELD INSTALLATION WILL NOT BE ACCEPTABLE.

BILL OF MATERIALS

| ITEM | QTY | DESCRIPTION | SUPPLY | MATERIAL/ RATING (WATER) | MATERIAL/ RATING (CHEMICAL) |
|---|---|---|---|---|---|
| 1 | 5 | SUN-SHIELD PANEL | MANF | 316 SS | 316 SS |
| 2 | 20 | 1/4" (8mm) ACORN NUT | MANF | 316 SS | 316 SS |
| 3 | 20 | 1/4" (8mm)x1 1/4" (32mm) LONG STUD | MANF | 316 SS | 316 SS |
| 4 | 20 | 1/4" (8mm) IDx3/4" (20mm) OD FLAT WASHER | MANF | 316 SS | 316 SS |
| 5 | 20 | SPACER 1/4" (8mm)x1" (25mm) LONG | MANF | UV-RESISTANT BLACK NYLON | UV-RESISTANT BLACK NYLON |

I-703 PANEL SUNSHIELD
REV 010119

J-U-B ENGINEERS, INC.
J-U-B ENGINEERS, INC.
392 E. Winchester St., Suite 300
Salt Lake City, UT 84107
Phone: 801.547.0393
www.jub.com

Subconsultant:
Stantec
Stantec
2890 E Cottonwood Pkwy
Suite 300, Salt Lake City, Ut 84121
Tel: +1.801.617.3200
www.stantec.com

AGENCY REVIEW

REUSE OF DRAWINGS
J-U-B SHALL RETAIN ALL COMMON LAW STATUTORY, COPYRIGHT AND OTHER RESERVED RIGHTS OF THESE DRAWINGS, AND THE SAME SHALL NOT BE REUSED WITHOUT J-U-B'S PRIOR WRITTEN CONSENT. ANY REUSE WITHOUT WRITTEN CONSENT BY J-U-B WILL BE AT CLIENTS SOLE RISK AND WITHOUT LIABILITY OR LEGAL EXPOSURE TO J-U-B.

| NO. | DESCRIPTION | BY (APP.) | DATE |
|---|---|---|---|
| A | ADDENDUM NO 2 | VBK (BH) | 04/06/2021 |

REVISION

SPANISH FORK & MAPELTON WRF
SPANISH FORK CITY CORPORATION

INSTRUMENTATION AND CONTROL
INSTALLATION DETAILS - XIV

FILE : 55-20-124_00I-914
JUB PROJ. # : 55-20-124
DRAWN BY: VBK
DESIGN BY: BH
CHECKED BY: SR
ONE INCH
AT FULL SIZE, IF NOT ONE INCH, SCALE ACCORDINGLY
LAST UPDATED: 6/30/2022

DRAWING:
00-I-914

SHEET: 497 OF 691

Plot Date:6/30/2022 8:04 PM Plotted By: Pinnaduwa-Hewage, Ranga
Date Created:8/29/2021 C:\PLANTCACHE\181301139_SPNSH FRK MAPLTN WRF DESIGN\PID DWG\55-20-124_00I-914.DWG

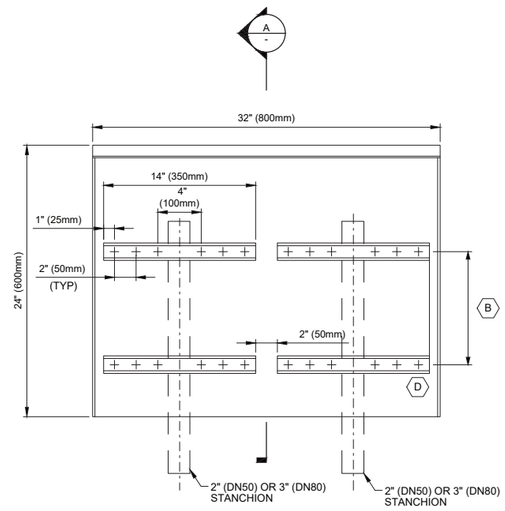


TYPE 32" (800mm) FRONT VIEW

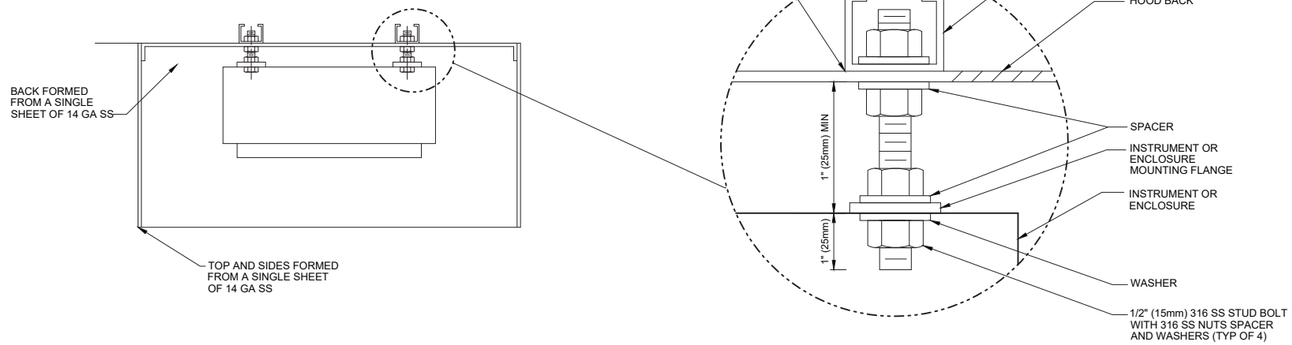


TOP VIEW WITH MOUNTED ELEMENT

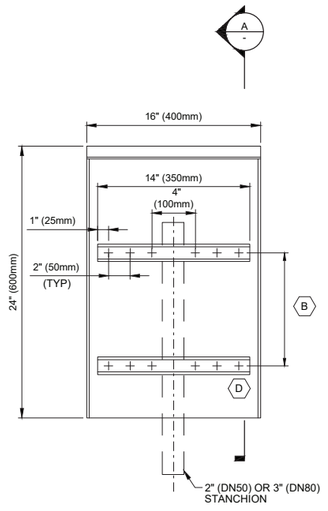


TYPE 16" (400mm) FRONT VIEW

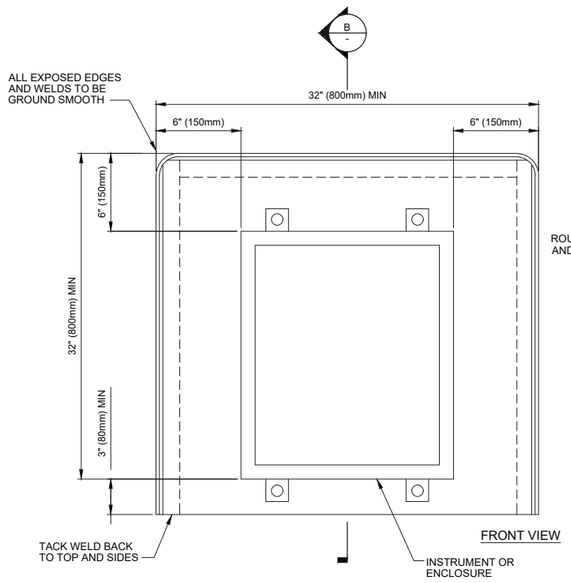


FRONT VIEW WITH MOUNTED ELEMENT

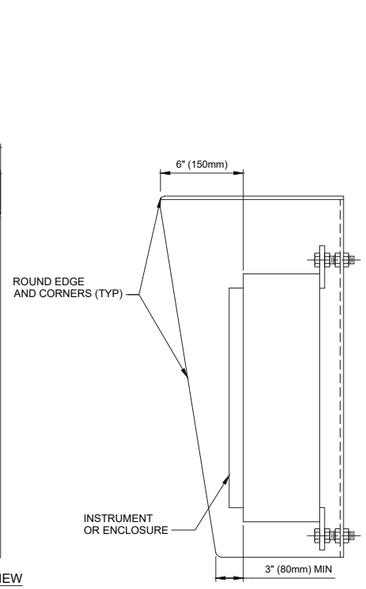


B SECTION

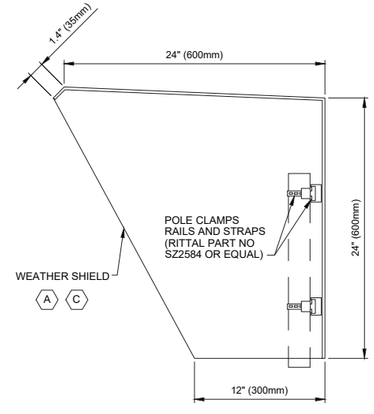


A SECTION

GENERAL NOTES:

1. REFER TO INSTRUMENT STAND INSTALLATION DETAIL I-701 FOR STANCHION SUPPORT DETAILS.
2. CROSS RAILS TO HAVE MOUNTING HOLES DRILLED AS DETAILED.

KEYNOTES:

A. 304 STAINLESS STEEL.
B. WEATHER SHIELD MOUNTING HOLES ARE TO BE DRILLED ON SITE TO SUIT JUNCTION BOX POSITION, HOLES TO BE SMOOTH AND DEBURRED.
C. WEATHER SHIELD OPEN AT FRONT AND BOTTOM.
D. WEATHER SHIELD ATTACHED TO CROSS RAILS WITH 1/4" (6mm) DIA BY 3/4" (20mm) LONG 316SS BOLTS, 1/4" (6mm) DIA NUTS AND WASHERS.

I-702 INSTRUMENT WEATHER SHIELD

REV 010119


J-U-B ENGINEERS, INC.

J-U-B ENGINEERS, INC.
392. E. Winchester St., Suite 300
Salt Lake City, UT 84107
Phone: 801.547.0393
www.jub.com

Subconsultant:

Stantec

Stantec
2890 E Cottonwood Pkwy
Suite 300, Salt Lake City, Ut
84121
Tel: +1.801.617.3200
www.stantec.com


AGENCY

REVIEW


REUSE OF DRAWINGS
J-U-B SHALL RETAIN ALL COMMON LAW, STATUTORY, COPYRIGHT AND OTHER RESERVED RIGHTS OF THESE DRAWINGS, AND THE SAME SHALL NOT BE REUSED WITHOUT J-U-B'S PRIOR WRITTEN CONSENT. ANY REUSE WITHOUT WRITTEN CONSENT BY J-U-B WILL BE AT CLIENTS SOLE RISK AND WITHOUT LIABILITY OR LEGAL EXPOSURE TO J-U-B.


| NO. | REVISION | BY (APP.) | DATE |
|---|---|---|---|
| A | ADDENDUM NO 2 | VBK (BH) | 04/06/2021 |

SPANISH FORK & MAPELTON WRF
SPANISH FORK CITY CORPORATION

INSTRUMENTATION AND CONTROL
INSTALLATION DETAILS - XV

FILE : 55-20-124_00I-915
JUB PROJ. # : 55-20-124
DRAWN BY: VBK
DESIGN BY: BH
CHECKED BY: SR
ONE INCH
AT FULL SIZE, IF NOT ONE INCH, SCALE ACCORDINGLY
LAST UPDATED: 6/30/2022

DRAWING:
00-I-915

SHEET: 498 OF 691


Plot Date:6/30/2022 8:04 PM Plotted By: Pirnadiwa-Hewage, Ranga
Date Created:8/29/2021 C:\PLANTCAD\HE\181301\39_SPNSH FRK MAPLTN WRF DESIGN\PID DWG\55-20-124_00I-915.DWG

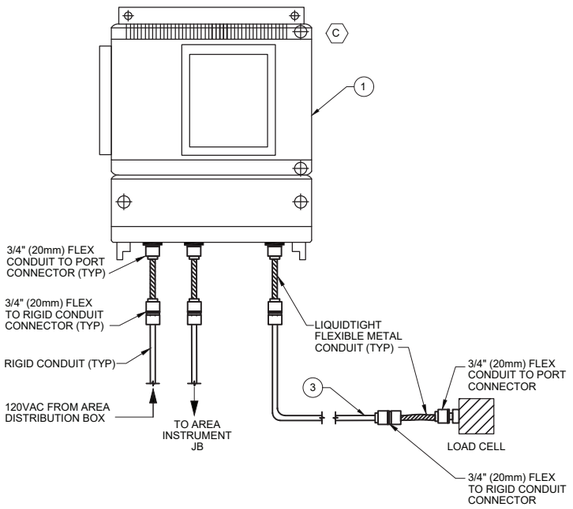


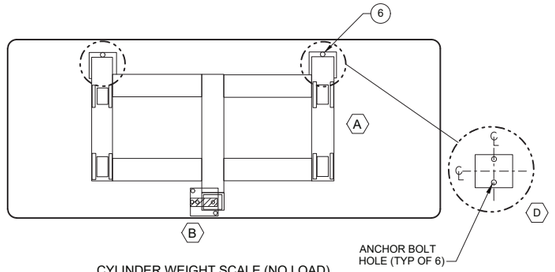


CYLINDER WEIGHT SCALE (NO LOAD)
PLAN VIEW

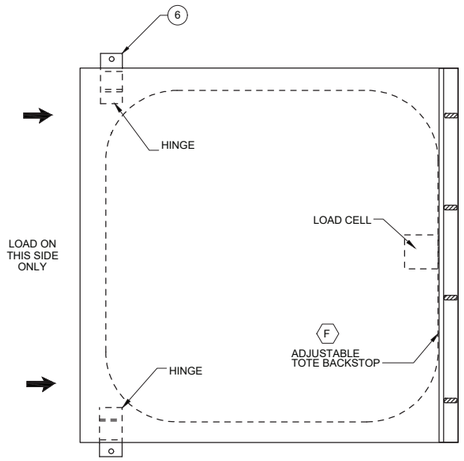


TOTE WEIGHT SCALE (NO LOAD)
PLAN VIEW

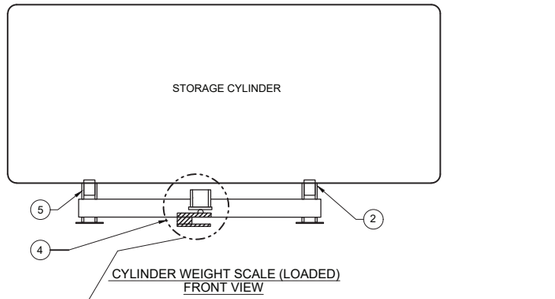


CYLINDER WEIGHT SCALE (LOADED)
FRONT VIEW

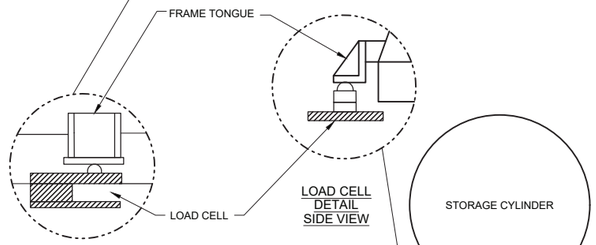


LOAD CELL DETAIL
FRONT VIEW

CYLINDER WEIGHT SCALE (LOADED)
SIDE VIEW

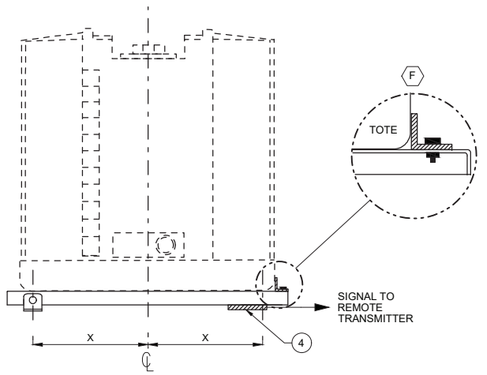


TOTE WEIGH SCALE (LOADED)
SIDE VIEW

GENERAL NOTES:

1. TRUNNION BASE AND LOAD CELL INSTALLATION PER MANUFACTURER'S REQUIREMENTS. STORAGE CYLINDER SUPPORTING CHAINS / STRAPS NOT SHOWN.
2. REFER TO DIVISION 26 SPECIFICATIONS FOR FLEX AND RIGID CONDUIT MATERIAL AND USAGE LIMITATIONS.
3. FOR TOTE WEIGH SCALE: COORDINATE TOTE WEIGH SCALE INSTALLATION WITH ANTICIPATED LOAD / UNLOAD METHOD.
   A. FORKLIFT METHOD: INSTALL AS REQUIRED FOR FORKLIFT ACCESS.
   B. PALLET JACK METHOD: SCALE PLATFORM MUST BE FLUSH WITH FLOOR.
4. REFER TO SPEC 05500 - MISC METALS FOR ADDITIONAL ANCHORING REQUIREMENTS.

KEYNOTES:

A. TRUNNION BASE DIMENSIONS PER VENDOR TO SAFELY ACCOMMODATE REQUIRED LOAD.
B. POSITION LOAD CELL PARALLEL WITH SCALE FRAME.
C. WALL OR INSTRUMENT-STAND MOUNT PER DETAIL I-701.
D. DRILL CONCRETE AND FASTEN WITH REDHEAD ANCHORS. DO NOT PRE-POUR ANCHOR BOLTS IN CONCRETE SLAB.
E. ANCHOR BOLT SIZE TO BE CONFIRMED BY MANUFACTURER.
F. FOR ACCURATE MEASUREMENT, ADJUST BACKSTOP SO THAT TOTE IS CENTERED ON PLATFORM.

BILL OF MATERIALS

| ITEM | QTY | DESCRIPTION | SUPPLY | MATERIAL/ RATING (WATER) | MATERIAL/ RATING (CHEMICAL) |
|---|---|---|---|---|---|
| 1 | 1 | ELECTRONIC DISPLAY / TRANSMITTER HOUSING | MANF | NON-METALLIC, UV RESISTANT | NON-METALLIC, UV RESISTANT |
| 2 | PER CYL | SINGLE CYLINDER TRUNNION BASE WITH LOAD CELL (A) | MANF | ASTM-A36 EPOXY POWDER COATED STEEL | ASTM-A36 EPOXY POWDER COATED STEEL |
| 3 | 1 PER SCALE | LOAD CELL SIGNAL CABLE (LENGTH AS REQUIRED) | MANF | JACKET PER MANF | JACKET PER MANF |
| 4 | 1 PER SCALE | SHEAR BEAM, STRAIN GAUGE TYPE LOAD CELL | MANF | PER MANF | PER MANF |
| 5 | 4 PER SCALE | BRUSHED BEARING ROLLER | MANF | PER MANF | PER MANF |
| 6 | AS REQ BY MANF | 5/8" (16mm) DIA x1 1/2" (38mm) LONG SS REDHEAD ANCHOR BOLTS (E) | MANF | PER MANF | PER MANF |

I-802 WEIGHT SCALE
REV 010119

Plot Date:6/30/2022 8:04 PM Plotted By: Pinnaduwa-Hewage, Ranga
Date Created:8/29/2021 C:\PLANTCACHE\181301139_SPNSH FRK MAPLTN WRF DESIGN\PID DWG\55-20-124_00I-916.DWG

J-U-B ENGINEERS, INC.
J-U-B ENGINEERS, INC.
392. E. Winchester St., Suite 300
Salt Lake City, UT 84107
Phone: 801.547.0393
www.jub.com

Subconsultant:
Stantec
Stantec
2890 E Cottonwood Pkwy
Suite 300, Salt Lake City, Ut 84121
Tel: +1.801.617.3200
www.stantec.com

AGENCY

REVIEW

J-U-B SHALL RETAIN ALL COMMON LAW, STATUTORY, COPYRIGHT AND OTHER RESERVED RIGHTS OF THESE DRAWINGS, AND THE SAME SHALL NOT BE REUSED WITHOUT J-U-B'S PRIOR WRITTEN CONSENT. ANY REUSE WITHOUT WRITTEN CONSENT BY J-U-B WILL BE AT CLIENTS SOLE RISK AND WITHOUT LIABILITY OR LEGAL EXPOSURE TO J-U-B.
REUSE OF DRAWINGS

| NO. | REVISION | BY (APP.) | DATE |
|---|---|---|---|
| A | ADDENDUM NO 2 | VBK (BH) | 04/06/2021 |

SPANISH FORK & MAPELTON WRF
SPANISH FORK CITY CORPORATION

INSTRUMENTATION AND CONTROL
INSTALLATION DETAILS - XVI

FILE : 55-20-124_00I-916
JUB PROJ. # : 55-20-124
DRAWN BY: VBK
DESIGN BY: BH
CHECKED BY: SR
ONE INCH
AT FULL SIZE, IF NOT ONE INCH, SCALE ACCORDINGLY
LAST UPDATED: 6/30/2022

DRAWING:
00-I-916

SHEET: 499 OF 691

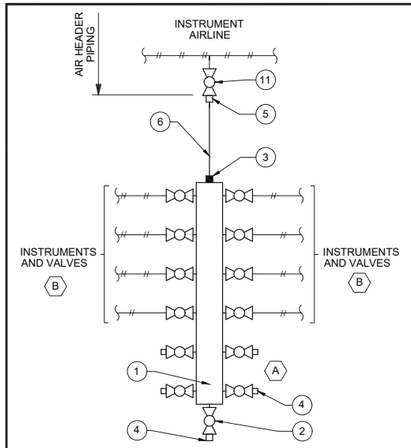


12 WAY AIR SUPPLY MANIFOLD

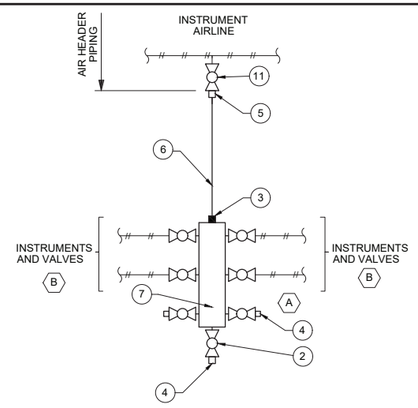


6 WAY AIR SUPPLY MANIFOLD

C

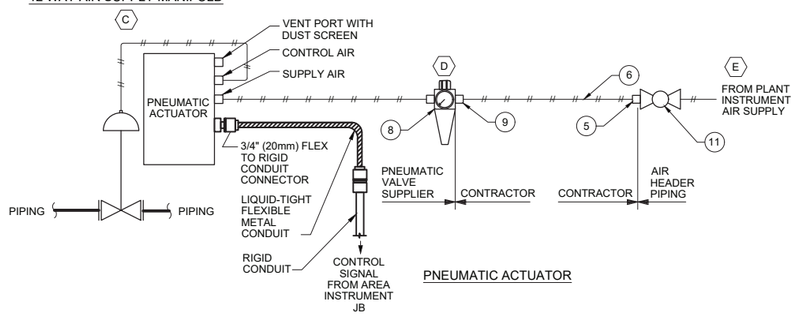


PNEUMATIC ACTUATOR

GENERAL NOTES:

1. THREAD SEALANT / LUBRICANT TO BE USED ON ALL THREADED CONNECTIONS. MATERIAL TO SUIT AIR SERVICE CONDITIONS.
2. INSTALLATION SHALL BE CARRIED OUT IN COOPERATION WITH PIPING CONTRACTOR.
3. ALL TUBING AND COMPRESSION FITTINGS, INCLUDING ISOLATION AND BYPASS VALVES SHALL BE AS MANUFACTURED BY SWAGELOK OR ENGINEER APPROVED EQUAL.
4. ALL COMPONENTS, TUBING AND COMPRESSION FITTINGS SHALL BE IMMUNE TO THE CORROSIVE EFFECTS OF OIL AND CONDENSED MOISTURE. PRESSURE AND TEMPERATURE RATINGS SHALL BE AS DETAILED IN THE AIR COMPRESSOR SYSTEM MECHANICAL SPECIFICATION.
5. TUBING SHALL BE CONSIDERED TO BE SELF SUPPORTING UP TO LENGTHS OF 24-INCHES (610mm). FOR LONGER LENGTHS, TUBING SHALL BE SUPPORTED OVER THE FULL LENGTH AND FIXED TO THE SUPPORT AT APPROXIMATELY 3-FT (1m) INTERVALS WITH RUBBER-CUSHIONED STAINLESS STEEL CLAMPS AS MANUFACTURED BY SWAGELOK OR ENGINEER APPROVED EQUAL.

KEYNOTES:

A. PLUGS TO BE FITTED ON UNUSED VALVE PORTS.
B. EACH MANIFOLD ISOLATION VALVE TO BE LABELED TO SHOW WHICH INSTRUMENT IT SUPPLIES. SPARE VALVES TO BE LABELED AS SPARE.
C. ALL INSTRUMENT TUBING AND MANIFOLD SHALL BE PROVIDED WITH ADEQUATE MECHANICAL SUPPORT.
D. PNEUMATIC ACTUATED/CONTROLLED VALVE INSTALLATIONS SHALL INCLUDE A PRESSURE REGULATOR WITH INTEGRAL PRESSURE GAUGE PER INSTALLATION EXCEPT WHERE SPECIFICALLY NOTED OTHERWISE.
E. EMPLOY INSTRUMENT AIR MANIFOLD WHERE MORE THAN TWO INSTRUMENT AIR SUPPLY POINTS ARE REQUIRED.

BILL OF MATERIALS

| ITEM | QTY | DESCRIPTION | SUPPLY | PLANT/ INSTRUMENT AIR |
|---|---|---|---|---|
| 1 | 1 | 8 MANIFOLD, 12 PORT INSTRUMENT AIR 1/2" (15mm) NPTF IN/OUT | CONT | 316 SS |
| 2 | 1 | BALL VALVE, 1/2" (15mm) FNPT | CONT | 316 SS |
| 3 | 2 | MALE CONNECTOR 1/2" (15mm) OD TUBINGx1/2" (15mm) NPT | CONT | 316 SS |
| 4 | AR | HEX HEAD PLUG, 1/2" (15mm) NPTM | CONT | 316 SS |
| 5 | 1 | REDUCING BUSH 1" (25mm) NPTx1/2" (15mm) OD TUBING | CONT | 316 SS |
| 6 | AR | 1/2" (15mm) TUBE, 0.049" (1.25mm) WALL | CONT | 316 SS |
| 7 | 1 | 4 MANIFOLD, 6 PORT INSTRUMENT AIR 1/2" (15mm) NPTF IN/OUT | CONT | 316 SS |
| 8 | PER INSTALL | PRESSURE REDUCING REGULATOR WITH BLEED TAP AND INTEGRAL PRESSURE GAUGE | VALVE SUPPLIER | 316 SS |
| 9 | PER INSTALL | MALE REDUCING CONNECTOR 1/2" (15mm) TUBE TO 3/8" (10mm) NPTM | CONT | 316 SS |
| 10 | PER INSTALL | MALE CONNECTOR 1/2" (15mm) TUBE TO 1/2" (15mm) MNPT | CONT | 316 SS |
| 11 | 1 | BALL VALVE, 1" (25mm) FNPT | CONT | 316 SS |

I-804

AIR SUPPLY MANIFOLD

REV 010119

Plot Date:6/30/2022 8:04 PM Plotted By: Pinnadwa+Hawaje, Ranga
Date Created:8/29/2021 C:\PLANTCAD\HE1618130139_SPNSH FRK MAPLTN WRF DESIGN\PID DWG\55-20-124_00I-917.DWG

J-U-B ENGINEERS, INC.
J-U-B ENGINEERS, INC.
392. E. Winchester St., Suite 300
Salt Lake City, UT 84107
Phone: 801.547.0393
www.jub.com

Subconsultant:
Stantec
Stantec
2890 E Cottonwood Pkwy
Suite 300, Salt Lake City, Ut 84121
Tel: +1.801.617.3200
www.stantec.com

AGENCY

REVIEW

REUSE OF DRAWINGS
J-U-B SHALL RETAIN ALL COMMON LAW, STATUTORY, COPYRIGHT AND OTHER RESERVED RIGHTS OF THESE DRAWINGS, AND THE SAME SHALL NOT BE REUSED WITHOUT J-U-B'S PRIOR WRITTEN CONSENT. ANY REUSE WITHOUT WRITTEN CONSENT BY J-U-B WILL BE AT CLIENTS SOLE RISK AND WITHOUT LIABILITY OR LEGAL EXPOSURE TO J-U-B.

| NO. | DESCRIPTION | BY (APP.) | DATE |
|---|---|---|---|
| A | ADDENDUM NO 2 | VBK (BH) | 04/06/2021 |

REVISION

SPANISH FORK & MAPELTON WRF
SPANISH FORK CITY CORPORATION

INSTRUMENTATION AND CONTROL
INSTALLATION DETAILS - XVII

FILE : 55-20-124_00I-917
JUB PROJ. # : 55-20-124
DRAWN BY: VBK
DESIGN BY: BH
CHECKED BY: SR
ONE INCH
AT FULL SIZE, IF NOT ONE INCH, SCALE ACCORDINGLY
LAST UPDATED: 6/30/2022

DRAWING:
00-I-917

SHEET: 500 OF 691

GENERATOR NO 1

| E-STOP | GEN POWER FAIL | UTILITY POWER FAIL | GEN POWER ON | UTILITY POWER ON | GEN RAEDY | RUPTURE TANK LEAK | FUEL LEVEL HIGH | FUEL LEVEL LOW | OIL TEMP | COOLANT LEVEL | BATT. VOLTAGE |
|---|---|---|---|---|---|---|---|---|---|---|---|
| QA 100A | QA 100B | QA 100C | JI 100A | JI 100B | QL 100 | YA 100 | LAH 100 | LAL 100 | TAHH 100 | LALL 100 | EALL 100 |

HMI

| QA 100A | QA 100B | QA 100C | JI 100A | JI 100B | QL 100 | YA 100 | LAH 100 | LAL 100 |
|---|---|---|---|---|---|---|---|---|

PLANT PLC

GENERATOR SWITCHGEAR

FIELD

| AUTO/TEST /MAN | START | RUPTURE TANK LEAK | GEN POWER KVA | GEN VOLTAGE | BATT VOLT | OIL PRESSURE | EXHAUST TEMP | | |
|---|---|---|---|---|---|---|---|---|---|
| HS 100A | HMS 100A | LAH 100A | JL 100A | EI 100A | EI 100B | PI 100 | TI 100A | | |
| E-STOP | STOP | FUEL LEVEL | POWER FACTOR | FREQUENCY | RUN HOURS | GEN POWER ON | COOLANT LEVEL | READY | EXERCISE DUTY STATION INDICATION |
| HS 100B | HMS 100B | LAH 100B | JL 100B | SI 100A | KI 100A | JL 100C | LI 100 | YL 100 | KY 100 |
| ALARM RESET | | FUEL LEVEL | CURRENT | ENGINE RPM | ENGINE HOURS | OIL TEMP | COOLANT TEMP | GEN FAULT | |
| HMS 100C | | LAL 100 | II 100 | SI 100B | KI 100B | TI 100C | TI 100B | YA 100 | |

OI

05-LCP-100
GENERATOR LCP

ENGINE START

TP 100

FILL STATION

LI 102

LSH 101

TANK RUPTURE

LSH 102

LSL 102

05-GEN-100
GENERATOR NO 1

05-ME-100
GENERATOR VENDOR SKID NO 1

GENERATOR NO 2

| E-STOP | GEN POWER FAIL | UTILITY POWER FAIL | GEN POWER ON | UTILITY POWER ON | GEN RAEDY | RUPTURE TANK LEAK | FUEL LEVEL HIGH | FUEL LEVEL LOW | OIL TEMP | COOLANT LEVEL | BATT. VOLTAGE |
|---|---|---|---|---|---|---|---|---|---|---|---|
| QA 200A | QA 200B | QA 200C | JI 200A | JI 200B | QL 200 | YA 200 | LAH 200 | LAL 200 | TAHH 200 | LALL 200 | EALL 200 |

HMI

| QA 200A | QA 200B | QA 200C | JI 200A | JI 200B | QL 200 | YA 200 | LAH 200 | LAL 200 |
|---|---|---|---|---|---|---|---|---|

PLANT PLC

GENERATOR SWITCHGEAR

FIELD

| AUTO/TEST /MAN | START | RUPTURE TANK LEAK | GEN POWER KVA | GEN VOLTAGE | BATT VOLT | OIL PRESSURE | EXHAUST TEMP | | |
|---|---|---|---|---|---|---|---|---|---|
| HS 200A | HMS 200A | LAH 200A | JL 200A | EI 200A | EI 200B | PI 200 | TI 200A | | |
| E-STOP | STOP | FUEL LEVEL | POWER FACTOR | FREQUENCY | RUN HOURS | GEN POWER ON | COOLANT LEVEL | READY | EXERCISE DUTY STATION INDICATION |
| HS 200B | HMS 200B | LAH 200B | JL 200B | SI 200A | KI 200A | JL 200C | LI 200 | YL 200 | KY 200 |
| ALARM RESET | | FUEL LEVEL | CURRENT | ENGINE RPM | ENGINE HOURS | OIL TEMP | COOLANT TEMP | GEN FAULT | |
| HMS 200C | | LAL 200 | II 200 | SI 200B | KI 200B | TI 200C | TI 200B | YA 200 | |

OI

05-LCP-200
GENERATOR LCP

ENGINE START

TP 200

FILL STATION

LI 202

LSH 201

TANK RUPTURE

LSH 202

LSL 202

05-GEN-200
(FUTURE)
GENERATOR NO 2

05-ME-100
(FUTURE) GENERATOR VENDOR SKID NO 2


J-U-B ENGINEERS, INC.

J-U-B ENGINEERS, INC.
392 E. Winchester St., Suite 300
Salt Lake City, UT 84107
Phone: 801.547.0393
www.jub.com

Subconsultant:

Stantec
Stantec
2890 E Cottonwood Pkwy
Suite 300, Salt Lake City, Ut
84121
Tel: +1.801.617.3200
www.stantec.com


AGENCY

REVIEW


REUSE OF DRAWINGS
J-U-B SHALL RETAIN ALL COMMON LAW, STATUTORY, COPYRIGHT AND OTHER RESERVED RIGHTS OF THESE DRAWINGS, AND THE SAME SHALL NOT BE REUSED WITHOUT J-U-B'S PRIOR WRITTEN CONSENT. ANY REUSE WITHOUT WRITTEN CONSENT BY J-U-B WILL BE AT CLIENTS SOLE RISK AND WITHOUT LIABILITY OR LEGAL EXPOSURE TO J-U-B.


| NO. | DESCRIPTION | BY | APP'L | DATE |
|---|---|---|---|---|
| | REVISION | | | |

SPANISH FORK & MAPELTON WRF
SPANISH FORK CITY CORPORATION

INSTRUMENTATION AND CONTROL
BACKUP GENERATOR SYSTEM - P&ID

| | |
|---|---|
| FILE : | 55-20-124_05I-601 |
| JUB PROJ. # : | 55-20-124 |
| DRAWN BY: | ARB |
| DESIGN BY: | BH |
| CHECKED BY: | SR |

ONE INCH
AT FULL SIZE, IF NOT ONE INCH, SCALE ACCORDINGLY

LAST UPDATED: 6/30/2022

DRAWING:
05-I-601

SHEET: 501 OF 691


Plot Date:6/30/2022 6:04 PM, Plotted By: Pinnaduwe-Hewage, Ranga
Date Created:6/12/2021 C:\PLANTCACHE\181301139_SPNSH FRK MAPLTN WRF DESIGN\PID DWG\55-20-124_05I-601.DWG

| SHEET KEYNOTES | |
|---|---|
| 1 | TRANSMITTER TO BE LOCATED IN THE HEADWORKS. |

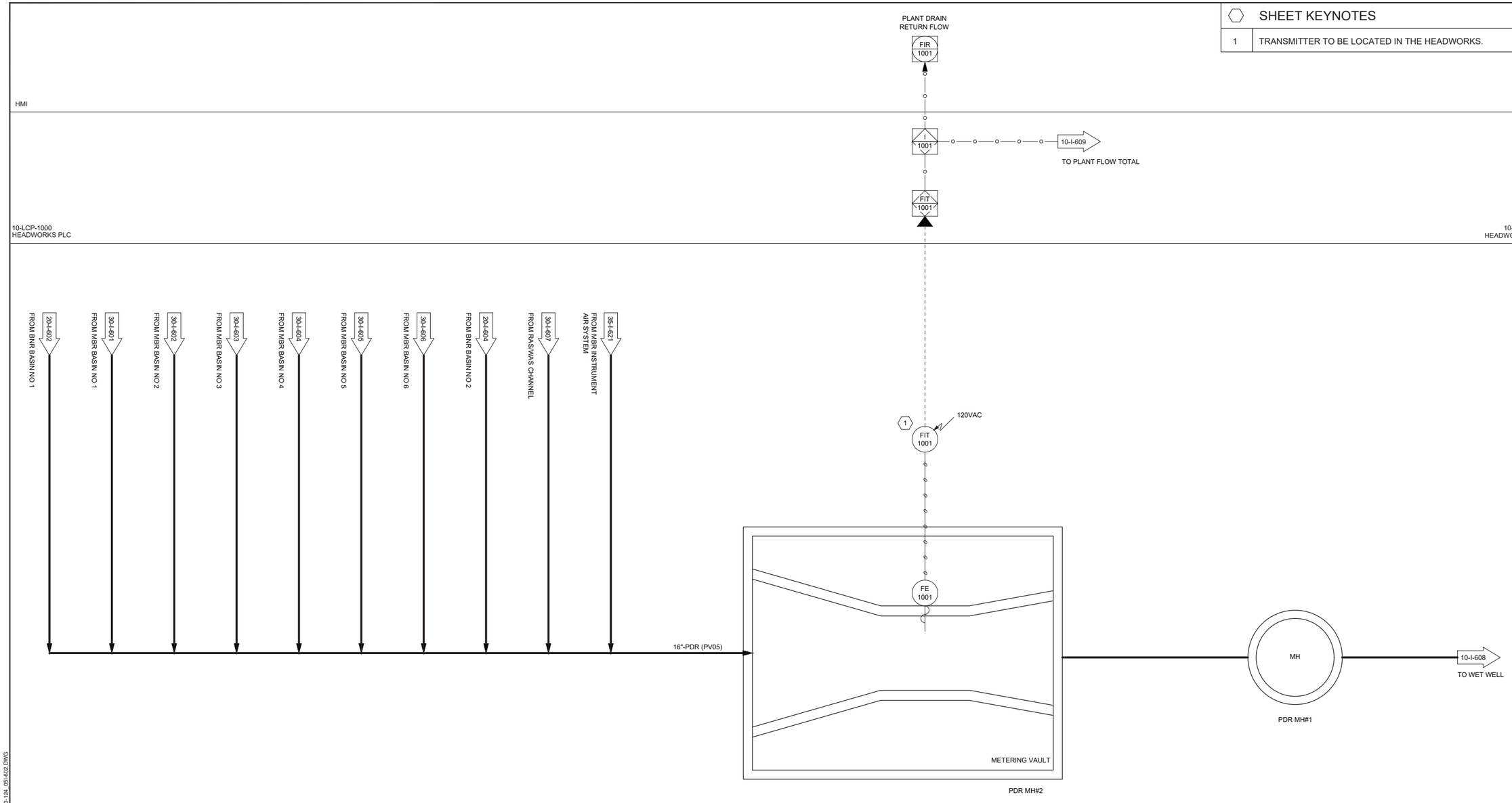



J-U-B ENGINEERS, INC.

J-U-B ENGINEERS, INC.
392. E. Winchester St., Suite 300
Salt Lake City, UT 84107
Phone: 801.547.0393
www.jub.com

Subconsultant:

Stantec

Stantec
2890 E Cottonwood Pkwy
Suite 300, Salt Lake City, Ut
84121
Tel: +1.801.617.3200
www.stantec.com


AGENCY

REVIEW


REUSE OF DRAWINGS
J-U-B SHALL RETAIN ALL COMMON LAW STATUTORY, COPYRIGHT AND OTHER RESERVED RIGHTS OF THESE DRAWINGS, AND THE SAME SHALL NOT BE REUSED WITHOUT J-U-B'S PRIOR WRITTEN CONSENT. ANY REUSE WITHOUT WRITTEN CONSENT BY J-U-B WILL BE AT CLIENTS SOLE RISK AND WITHOUT LIABILITY OR LEGAL EXPOSURE TO J-U-B.


| NO. | DESCRIPTION | BY | APR. | DATE |
|---|---|---|---|---|
| | REVISION | | | |

SPANISH FORK & MAPELTON WRF
SPANISH FORK CITY CORPORATION

INSTRUMENTATION AND CONTROL
PLANT DRAINS AND METERING VAULT P&ID

| | |
|---|---|
| FILE : | 55-20-124_05I-602 |
| JUB PROJ. # : | 55-20-124 |
| DRAWN BY: | VBK |
| DESIGN BY: | BH |
| CHECKED BY: | SR |

ONE INCH
AT FULL SIZE, IF NOT ONE INCH, SCALE ACCORDINGLY

LAST UPDATED: 6/30/2022

DRAWING:
05-I-602

SHEET: 502 OF 691


Plot Date:6/30/2022 8:04 PM Plotted By: Pinnaduwa-Hewage, Ranga
Date Created:1/5/2022 C:\PLANTCACHE\181301159_SPNSH FRK MAPLTN WRF DESIGN\PID DWG\55-20-124_05I-602.DWG

## SHEET KEYNOTES

| | |
|---|---|
| 1 | INSTRUMENTS, FITTINGS AND INSTALLATION SHALL BE SUITABLE FOR CLASS 1, DIV 1 AREA CLASSIFICATION. |
| 2 | FURNISHED BY COARSE SCREENINGS VENDOR. |
| 3 | FURNISHED AND INSTALLED BY CONTRACTOR. |
| 4 | EQUIPMENT SHALL BE LOCATED OUTSIDE THE HAZARDOUS AREA BOUNDARY. |


J-U-B ENGINEERS, INC.
J-U-B ENGINEERS, INC.
392 E. Winchester St., Suite 300
Salt Lake City, UT 84107
Phone: 801.547.0393
www.jub.com

Subconsultant:
Stantec
Stantec
2890 E Cottonwood Pkwy
Suite 300, Salt Lake City, Ut 84121
Tel: +1.801.617.3200
www.stantec.com


AGENCY

REVIEW


REUSE OF DRAWINGS
J-U-B SHALL RETAIN ALL COMMON LAW, STATUTORY, COPYRIGHT AND OTHER RESERVED RIGHTS OF THESE DRAWINGS, AND THE SAME SHALL NOT BE REUSED WITHOUT J-U-B'S PRIOR WRITTEN CONSENT. ANY REUSE WITHOUT WRITTEN CONSENT BY J-U-B WILL BE AT CLIENTS SOLE RISK AND WITHOUT LIABILITY OR LEGAL EXPOSURE TO J-U-B.


| NO. | DESCRIPTION | BY | APR. | DATE |
|---|---|---|---|---|
| | REVISION | | | |

SPANISH FORK & MAPELTON WRF
SPANISH FORK CITY CORPORATION

INSTRUMENTATION AND CONTROL
COARSE BAR SCREENS - I P&ID

FILE : 55-20-124_10I-601
JUB PROJ. # : 55-20-124
DRAWN BY: ARB
DESIGN BY: BH
CHECKED BY: SR
ONE INCH
AT FULL SIZE, IF NOT ONE INCH, SCALE ACCORDINGLY
LAST UPDATED: 7/6/2022

DRAWING:
10-I-601

SHEET: 503 OF 691


Plot Date:7/6/2022 1:02 PM Plotted By: Pimaduwa-Hewage, Ranga
Date Created:3/1/2021 C:\PLANTCAD\HE\181301\39_SPNSH FRK MAPLTN WRF DESIGN\PID DWG\55-20-124_10I-601.DWG

COARSE SCREEN NO 2

LEVEL CONTROL LOGIC

HMI

HEADWORKS PLC

HEADWORKS PLC

10-VCP-1000
COARSE SCREEN PLC

HOME POS
ZL 1203

ZS 1203

ETM
KQI 1203

FWD HS 1203A
REV HS 1203B
RDY YL 1203A
SPD CTRL SK 1203
SPD IND SI 1203
FAIL YL 1203B
E-STOP YA 1203C
E-STOP YA 1203D
AMPS II 1203
TORQ NAHH 1203

HS 1203A
HS 1203B
YL 1203A
SK 1203
SI 1203
YL 1203B
YA 1203C
YA 1203D
II 1203
NSHH 1203

LV DIFF SP
LDAHH 1203
LDAH 1203
LDIR 1203
LDK 1203
LIR 1203A
LIR 1203B

LIT 1203A
LIT 1203B

HMI

10-VCP-1000
COARSE SCREEN PLC

FIELD

HEADWORKS
ELECTRICAL ROOM

HOR HS 1203B
OFF YL 1203C
RUN YL 1203D
DRIVE TRIP CIRCUIT I 1203
VFD FAULT YA 1203C
TORQ NAHH 1203

START HMS 1203B
STOP HMS 1203C
RUN YL 1203A
AMPS II 1203
SPD SI 1203
SPD CTRL SC 1203
VFD RESET HMS 1203D
VFD AVAIL YL 1203B
E-STOP YA 1203A
GEN FAULT YA 1203B

OI

VFD CP

3 10-VFD-1203
COARSE SCREEN NO 2

OI
(VENDOR DEFINED)

OI
(VENDOR DEFINED)

10-VCP-1000
COARSE SCREEN VCP

2 10-VCP-1000
COARSE SCREEN VCP

FIELD

10-I-601
FROM COARSE SCREEN NO 1

10-I-605
FROM SCREEN CHANNEL

10-VF-5112

10-VF-5113

10"-FA (FR01

10"x14"

14"-FA (FR01

10-I-603
TO COARSE SCREEN NO 3

FWD/REV HMS 1203A
E-STOP HS 1203A
1
3
10-LCS-1203
COARSE SCREEN LCS

HOME POSITION

1
2
ZS 1203
NSHH 1203
M

120VAC
LIT 1203A
RADAR
1
2
LE 1203A

10-I-610
TO SLUICE CHANNEL

120VAC
LIT 1203B
RADAR
1
2
LE 1203B

10-I-601(A)
FROM COMMON INFLUENT CHANNEL

10-SCR-1203
COARSE SCREEN NO 2

10-I-601(B)
FROM COMMON EFFLUENT CHANNEL

2
COARSE SCREEN NO 2
VENDOR PACKAGE

10-STG-1204

## SHEET KEYNOTES

| | |
|---|---|
| 1 | INSTRUMENTS, FITTINGS AND INSTALLATION SHALL BE SUITABLE FOR CLASS 1, DIV 1 AREA CLASSIFICATION. |
| 2 | FURNISHED BY COARSE SCREENINGS VENDOR. |
| 3 | FURNISHED AND INSTALLED BY CONTRACTOR. |


J-U-B ENGINEERS, INC.

J-U-B ENGINEERS, INC.
392 E. Winchester St., Suite 300
Salt Lake City, UT 84107
Phone: 801.547.0393
www.jub.com

Subconsultant:

Stantec

Stantec
2890 E Cottonwood Pkwy
Suite 300, Salt Lake City, Ut
84121
Tel: +1.801.617.3200
www.stantec.com


AGENCY

REVIEW


REUSE OF DRAWINGS
J-U-B SHALL RETAIN ALL COMMON LAW, STATUTORY, COPYRIGHT AND OTHER RESERVED RIGHTS OF THESE DRAWINGS, AND THE SAME SHALL NOT BE REUSED WITHOUT J-U-B'S PRIOR WRITTEN CONSENT. ANY REUSE WITHOUT WRITTEN CONSENT BY J-U-B WILL BE AT CLIENTS SOLE RISK AND WITHOUT LIABILITY OR LEGAL EXPOSURE TO J-U-B.


| NO. | DESCRIPTION | BY | APR. | DATE |
|---|---|---|---|---|
| | REVISION | | | |

SPANISH FORK & MAPELTON WRF
SPANISH FORK CITY CORPORATION

INSTRUMENTATION AND CONTROL
COARSE BAR SCREENS - II P&ID

FILE : 55-20-124_10I-602
JUB PROJ. # : 55-20-124
DRAWN BY: ARB
DESIGN BY: BH
CHECKED BY: SR

ONE INCH
AT FULL SIZE, IF NOT ONE INCH, SCALE ACCORDINGLY

LAST UPDATED: 7/6/2022

DRAWING:
10-I-602

SHEET: 504 OF 691


Plot Date:7/6/2022 1:03 PM Plotted By: Pinnadawa Hewage, Ranga
Date Created:5/27/2021 C:\PLANTCAD\HE\181301\39_SPNSH FRK MAPLTN WRF DESIGN\PID DWG\55-20-124_10I-602.DWG

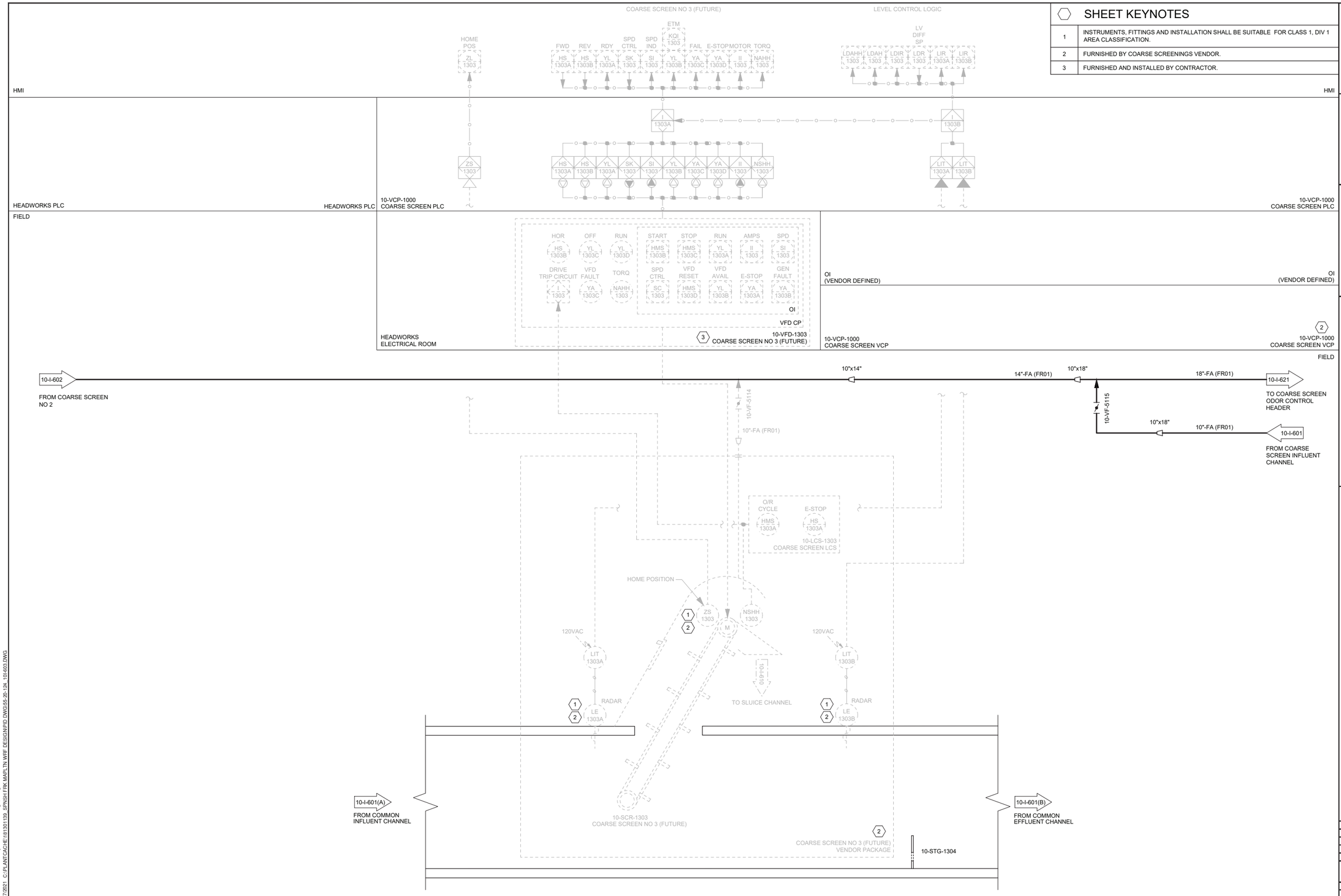


## SHEET KEYNOTES

| | |
|---|---|
| 1 | INSTRUMENTS, FITTINGS AND INSTALLATION SHALL BE SUITABLE FOR CLASS 1, DIV 1 AREA CLASSIFICATION. |
| 2 | FURNISHED BY COARSE SCREENINGS VENDOR. |
| 3 | FURNISHED AND INSTALLED BY CONTRACTOR. |


J-U-B ENGINEERS, INC.

J-U-B ENGINEERS, INC.
392 E. Winchester St., Suite 300
Salt Lake City, UT 84107
Phone: 801.547.0393
www.jub.com

Subconsultant:

Stantec

Stantec
2890 E Cottonwood Pkwy
Suite 300, Salt Lake City, Ut 84121
Tel: +1.801.617.3200
www.stantec.com


AGENCY

REVIEW


REUSE OF DRAWINGS
J-U-B SHALL RETAIN ALL COMMON LAW STATUTORY, COPYRIGHT AND OTHER RESERVED RIGHTS OF THESE DRAWINGS, AND THE SAME SHALL NOT BE REUSED WITHOUT J-U-B'S PRIOR WRITTEN CONSENT. ANY REUSE WITHOUT WRITTEN CONSENT BY J-U-B WILL BE AT CLIENTS SOLE RISK AND WITHOUT LIABILITY OR LEGAL EXPOSURE TO J-U-B.


| NO. | DESCRIPTION | BY | APR. | DATE |
|---|---|---|---|---|
| | REVISION | | | |

SPANISH FORK & MAPELTON WRF
SPANISH FORK CITY CORPORATION

INSTRUMENTATION AND CONTROL
COARSE BAR SCREENS - III P&ID

FILE : 55-20-124_10I-603
JUB PROJ. # : 55-20-124
DRAWN BY: ARB
DESIGN BY: BH
CHECKED BY: SR

ONE INCH
AT FULL SIZE, IF NOT ONE INCH, SCALE ACCORDINGLY

LAST UPDATED: 7/6/2022

DRAWING:
10-I-603

SHEET: 505 OF 691


Plot Date:7/6/2022 1:06 PM Plotted By: Pinnadawa Hewage, Ranga
Date Created:5/27/2021 C:\PLANTCAD\HE\181301139_SPNSH FRK MAPLTN WRF DESIGN\PID DWG\55-20-124_10I-603.DWG

## GENERAL SHEET NOTES

1. INSTRUMENTS, FITTINGS AND INSTALLATION SHALL BE SUITABLE FOR CLASS 1, DIV 1 AREA CLASSIFICATION.

## SHEET KEYNOTES

| | |
|---|---|
| 3 | FURNISHED AND INSTALLED BY CONTRACTOR. |
| 6 | FURNISHED BY GRIT REMOVAL SYSTEM VENDOR. |
| 7 | REFERENCE SPECIFICATION 46 23 23 FOR EQUIPMENT DETAIL. |

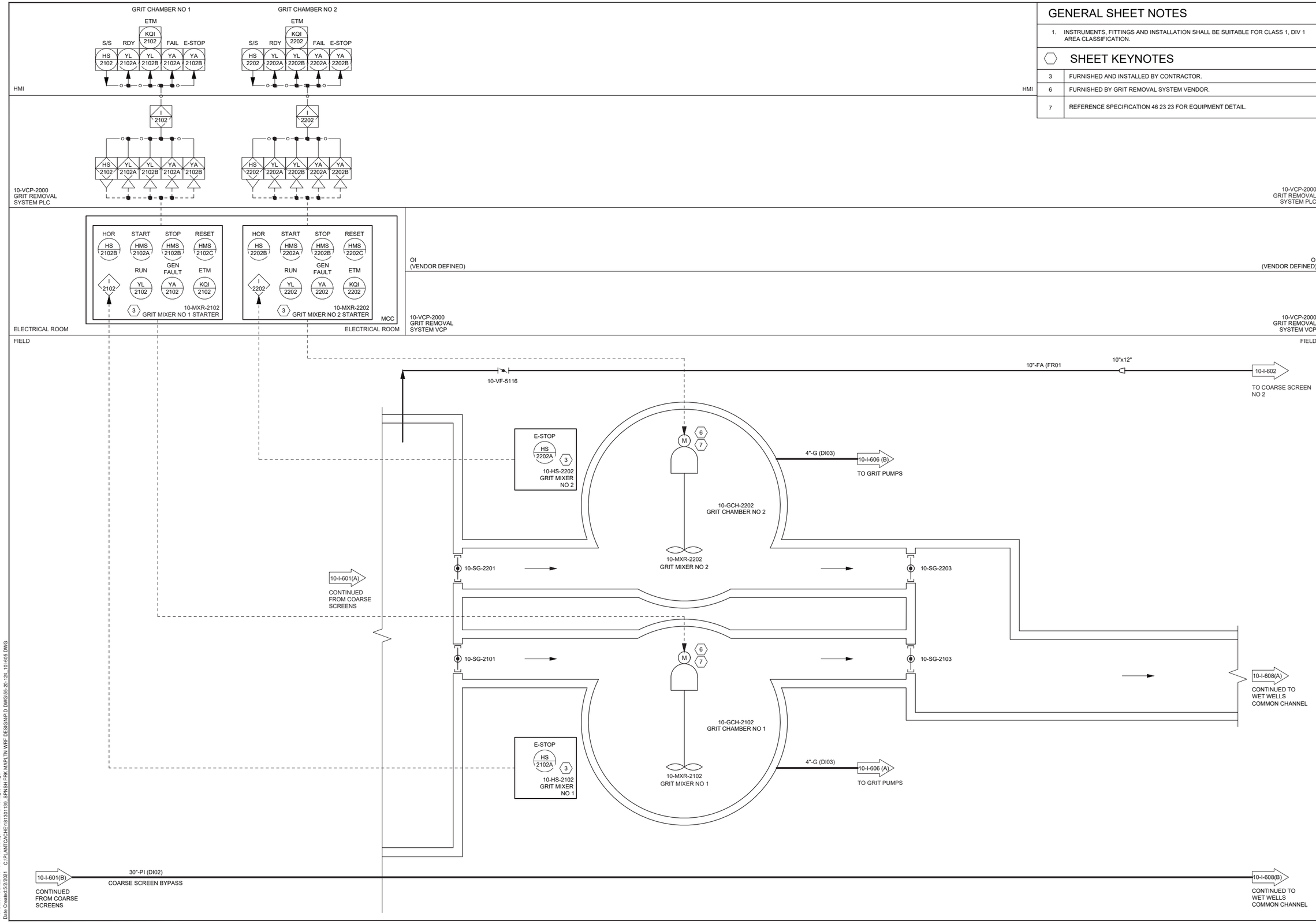



J-U-B ENGINEERS, INC.

J-U-B ENGINEERS, INC.
392 E. Winchester St., Suite 300
Salt Lake City, UT 84107
Phone: 801.547.0393
www.jub.com

Subconsultant:

Stantec
Stantec
2890 E Cottonwood Pkwy
Suite 300, Salt Lake City, Ut
84121
Tel: +1.801.617.3200
www.stantec.com


AGENCY

REVIEW


REUSE OF DRAWINGS
J-U-B SHALL RETAIN ALL COMMON LAW, STATUTORY, COPYRIGHT AND OTHER RESERVED RIGHTS OF THESE DRAWINGS, AND THE SAME SHALL NOT BE REUSED WITHOUT J-U-B'S PRIOR WRITTEN CONSENT. ANY REUSE WITHOUT WRITTEN CONSENT BY J-U-B WILL BE AT CLIENTS SOLE RISK AND WITHOUT LIABILITY OR LEGAL EXPOSURE TO J-U-B.


| NO. | DESCRIPTION | BY | APP. | DATE |
|---|---|---|---|---|
| | REVISION | | | |

SPANISH FORK & MAPELTON WRF
SPANISH FORK CITY CORPORATION

INSTRUMENTATION AND CONTROL
GRIT CHAMBERS P&ID
GRIT REMOVAL EQUIPMENT PRE-PROCUREMENT - ADDENDUM NO 1

| | |
|---|---|
| FILE : | 55-20-124_10I-605 |
| JUB PROJ. # : | 55-20-124 |
| DRAWN BY: | UHB |
| DESIGN BY: | BH |
| CHECKED BY: | SR |

ONE INCH
AT FULL SIZE, IF NOT ONE INCH, SCALE ACCORDINGLY

LAST UPDATED: 7/6/2022

DRAWING:
10-I-605

SHEET: 506 OF 691


Plot Date:7/6/2022 1:01 PM Plotted By: Pimradawa-Hewage, Ranga
Date Created:5/2/2021 C:\PLANTCAD\HE181301\39_SPNSH FRK MAPLTN WRF DESIGN\PID DWG\55-20-124_10I-605.DWG

## GENERAL SHEET NOTES

1. ALL INSTRUMENTS, EQUIPMENT AND PANELS SHOWN ON THIS DRAWING SHALL BE FURNISHED BY THE COARSE SCREENINGS VENDOR (INSTALLATION BY CONTRACTOR) UNLESS SPECIFICALLY NOTED OTHERWISE.
2. EQUIPMENT OPERATION AND SAFETY INTERLOCKS SHALL BE AS DEFINED BY THE COARSE SCREENINGS VENDOR WITH ADDITIONAL REQUIREMENTS AS DETAILED IN SPECIFICATION SECTION 46 21 13 AND 46 21 72.

## SHEET KEYNOTES

| | |
|---|---|
| 1 | INSTRUMENTS, FITTINGS AND INSTALLATION SHALL BE SUITABLE FOR CLASS 1, DIV 1 AREA CLASSIFICATION. |
| 2 | FURNISHED BY COARSE SCREENINGS VENDOR. |
| 3 | FURNISHED AND INSTALLED BY CONTRACTOR. |
| 5 | POSITION SENSOR SHALL BE MAGNETIC PROXIMITY TYPE RATED NEMA 7 AND SUITABLE FOR AREA CLASSIFICATION. |


J-U-B ENGINEERS, INC.

J-U-B ENGINEERS, INC.
392 E. Winchester St., Suite 300
Salt Lake City, UT 84107
Phone: 801.547.0393
www.jub.com

Subconsultant:

Stantec
Stantec
2890 E Cottonwood Pkwy
Suite 300, Salt Lake City, Ut
84121
Tel: +1.801.617.3200
www.stantec.com


AGENCY

REVIEW


REUSE OF DRAWINGS
J-U-B SHALL RETAIN ALL COMMON LAW, STATUTORY, COPYRIGHT AND OTHER RESERVED RIGHTS OF THESE DRAWINGS, AND THE SAME SHALL NOT BE REUSED WITHOUT J-U-B'S PRIOR WRITTEN CONSENT. ANY REUSE WITHOUT WRITTEN CONSENT BY J-U-B WILL BE AT CLIENTS SOLE RISK AND WITHOUT LIABILITY OR LEGAL EXPOSURE TO J-U-B.


| NO. | DESCRIPTION | BY | APP'L | DATE |
|---|---|---|---|---|
| | REVISION | | | |

SPANISH FORK & MAPELTON WRF
SPANISH FORK CITY CORPORATION

INSTRUMENTATION AND CONTROL
COARSE SCREENING WASHER PRESS - P&ID

| | |
|---|---|
| FILE : | 55-20-124_10I-604 |
| JUB PROJ. # : | 55-20-124 |
| DRAWN BY: | UHB |
| DESIGN BY: | BH |
| CHECKED BY: | SR |

ONE INCH
AT FULL SIZE, IF NOT ONE INCH, SCALE ACCORDINGLY

LAST UPDATED: 6/30/2022

DRAWING:
10-I-604

SHEET: 507 OF 691


Plot Date:6/30/2022 8:05 PM, Plotted By: Pinnaduwe-Hewage, Ranga
Date Created:5/2/2021 C:\PLANTCACHE\181301159_SPNSH FRK MAPLTN WRF DESIGN\PID DWG\55-20-124_10I-604.DWG

GRIT PUMP NO 2

SYS A/M SEL: HS 2000A
DUTY SEAL: HS 2000B
DUTY ROT TMR: KIK 2000
ETM: KQI 2205
S/S: HS 2205
RDY: YL 2205A
FAIL: YL 2205B
E-STOP: YA 2205A, YA 2205B
PAH 2205
PAL 2205
HMI
I 2000 → 4, 3
4 → I 2205 → 1
HS 2205, YL 2205A, YL 2205B, YA 2205A, YA 2205B, PAH 2205, PAL 2205
10-VCP-2000 GRIT REMOVAL SYSTEM PLC

HOR: HS 2205B
START: HMS 2205A
STOP: HMS 2205B
RESET: HMS 2205C
PRESS HIGH: YA 2205B
I 2205
RUN: YL 2205A
GEN FAULT: YA 2205
ETM: KQI 2205
PRESS LOW: YA 2205C
3
10-P-2205 GRIT PUMP NO 2 STARTER
ELECTRICAL ROOM

FIELD

E-STOP: HS 2205A (3)
10-HS-2205 GRIT PUMP NO 2
PSL 2205
PI 2205A
PSH 2205
PI 2205B

10-I-605 (B)
FROM GRIT CHAMBER NO 2
4"-G (DI03)
10-VP-2204
M
10-P-2205 GRIT PUMP NO 2
6
SOV 8206
S
FI 8206
2"-UW (PV01)

GRIT PUMP NO 1

ETM: KQI 2105
S/S: HS 2105
RDY: YL 2105A
FAIL: YL 2105B
E-STOP: YA 2105A, YA 2105B
PAH 2105
PAL 2105
I 2105 → 3, 2
HS 2105, YL 2105A, YL 2105B, YA 2105A, YA 2105B, PAH 2105, PAL 2105

HOR: HS 2105B
START: HMS 2105A
STOP: HMS 2105B
RESET: HMS 2105C
PRESS HIGH: YA 2105B
I 2205
RUN: YL 2105
GEN FAULT: YA 2105
ETM: KQI 2105
PRESS LOW: YA 2105C
3
10-P-2105 GRIT PUMP NO 1 STARTER
ELECTRICAL ROOM

E-STOP: HS 2105A (3)
10-HS-2105 GRIT PUMP NO 1
PSL 2105
PI 2105A
PSH 2105
PI 2105B

10-I-622
UTILITY WATER FROM HIGH PRESSURE BOOSTER PUMP SYSTEM
2"-UW (PV01)
10-I-605 (A)
FROM GRIT CHAMBER NO 1
4"-G (DI03)
10-VP-2104
M
10-P-2105 GRIT PUMP NO 1
6
SOV 8202
S
FI 8202
2"-UW (PV01)

GRIT PUMP NO 2 DISCHARGE VALVE

O/C: HS 2206
RDY: YL 2206
OPEN: ZLO 2206
CLSD: ZLC 2206
TORQ: NAHH 2206
I 2206 → 1
HS 2206, YL 2206, ZLO 2206, ZLC 2206, NAHH 2206
OI (VENDOR DEFINED)

LOR: HS 2206A
CLSD: ZLC 2206
TORQ: NAHH 2206
O/C: HS 2206B
OPND: ZLO 2206
480VAC
OI
10-MOV-2206 VALVE ACTUATOR
MOV 2206
M
3
8
4"-G (DI03)

GRIT PUMP NO 1 DISCHARGE VALVE

O/C: HS 2106
RDY: YL 2106
OPEN: ZLO 2106
CLSD: ZLC 2106
TORQ: NAHH 2106
HMI
I 2106 → 2
HS 2106, YL 2106, ZLO 2106, ZLC 2106, NAHH 2106
10-VCP-2000 GRIT REMOVAL SYSTEM PLC
OI (VENDOR DEFINED)

10-VCP-2000 GRIT REMOVAL SYSTEM VCP
FIELD

LOR: HS 2106A
CLSD: ZLC 2106
TORQ: NAHH 2106
O/C: HS 2106B
OPND: ZLO 2106
480VAC
OI
10-MOV-2106 VALVE ACTUATOR
MOV 2106
M
3
8
4"-G (DI03)

10-VP-2207
10-I-607 (B)
TO GRIT WASHER NO 2
10-VP-2107
10-I-607 (A)
TO GRIT WASHER NO 1

## GENERAL SHEET NOTES

1. EQUIPMENT OPERATION AND SAFETY INTERLOCKS SHALL BE AS DEFINED BY THE GRIT REMOVAL SYSTEM VENDOR WITH ADDITIONAL REQUIREMENTS AS DETAILED IN SPECIFICATION SECTION 46 23 23.

## SHEET KEYNOTES

| | |
|---|---|
| 3 | FURNISHED AND INSTALLED BY CONTRACTOR. |
| 6 | FURNISHED BY GRIT REMOVAL SYSTEM VENDOR. |
| 8 | CONTROLLED BY GRIT REMOVAL SYSTEM. |


J-U-B ENGINEERS, INC.
J-U-B ENGINEERS, INC.
392 E. Winchester St., Suite 300
Salt Lake City, UT 84107
Phone: 801.547.0393
www.jub.com

Subconsultant:
Stantec
Stantec
2890 E Cottonwood Pkwy
Suite 300, Salt Lake City, Ut
84121
Tel: +1.801.617.3200
www.stantec.com


AGENCY

REVIEW


REUSE OF DRAWINGS
J-U-B SHALL RETAIN ALL COMMON LAW, STATUTORY, COPYRIGHT AND OTHER RESERVED RIGHTS OF THESE DRAWINGS, AND THE SAME SHALL NOT BE REUSED WITHOUT J-U-B'S PRIOR WRITTEN CONSENT. ANY REUSE WITHOUT WRITTEN CONSENT BY J-U-B WILL BE AT CLIENTS SOLE RISK AND WITHOUT LIABILITY OR LEGAL EXPOSURE TO J-U-B.


| NO. | DESCRIPTION | BY | APR. | DATE |
|---|---|---|---|---|
| | REVISION | | | |

SPANISH FORK & MAPELTON WRF
SPANISH FORK CITY CORPORATION

INSTRUMENTATION AND CONTROL
GRIT PUMPS P&ID
GRIT REMOVAL EQUIPMENT PRE-PROCUREMENT - ADDENDUM NO 1

FILE : 55-20-124_10I-606
JUB PROJ. # : 55-20-124
DRAWN BY: UHB
DESIGN BY: BH
CHECKED BY: SR
ONE INCH
AT FULL SIZE, IF NOT ONE INCH, SCALE ACCORDINGLY
LAST UPDATED: 6/30/2022

DRAWING:
10-I-606

SHEET: 508 OF 691

Plot Date:6/30/2022 8:05 PM Plotted By: Pinnaduwa-Hewage, Ranga
Date Created:5/2/2021 C:\PLANTCAD\E1\81301139_SPNSH FRK MAPLTN WRF DESIGN\PID DWG\55-20-124_10I-606.DWG

HMI

10-VCP-2000
GRIT REMOVAL
SYSTEM PLC

OI
(VENDOR DEFINED)

6
10-VCP-2000
GRIT REMOVAL
SYSTEM VCP

FIELD

O/C/A HS 7002 · O/C/A HS 8216 · O/C/A HS 2212 · O/C/A HS 8211 · O/C/A HS 7001 · O/C/A HS 2112

10-VCP-2000
GRIT REMOVAL SYSTEM VCP

OI
(VENDOR DEFINED)

ELECTRICAL
ROOM

GRIT CLASSIFIER NO 1
ETM KQI 2111
S/S HS 2111 · RDY YL 2111 · FAIL YA 2111 · E-STOP YA 2111

LI 2111 · I 2111 · LIT 2111

HS 2111 · YL 2111A · YL 2111B · YA 2111A · YA 2111B

HOR HS 2111B · START HMS 2111A · STOP HMS 2111B · RESET HMS 2111C
RUN YL 2111 · FAIL YA 2111 · ETM KQI 2111
I 2111 · 3 · 10-ME-2111
GRIT WASHER NO 1 STARTER

GRIT CLASSIFIER NO 2
ETM KQI 2211
S/S HS 2211 · RDY YL 2211 · FAIL YA 2211 · E-STOP YA 2211

LI 2211 · I 2211 · LIT 2211

HS 2211 · YL 2211A · YL 2211B · YA 2211A · YA 2211B

HOR HS 2211B · START HMS 2211A · STOP HMS 2211B · RESET HMS 2211C
RUN YL 2211 · FAIL YA 2211 · ETM KQI 2211
I 2211 · 3 · 10-ME-2211
GRIT WASHER NO 2 STARTER

10-VCP-2000
GRIT REMOVAL
SYSTEM PLC

HEADWORKS PLC

LEVEL LI 2120A · LEVEL LI 2120B · RDY YL 2120A · RUN YL 2120B · FAULT YA 2120
I 2120
LIT 2120A · LIT 2120B · YL 2120A · YL 2120B · YA 2120

HEADWORKS PLC

ELECTRICAL
ROOM

HMI

FIELD

10-I-606 (A)
FROM
GRIT PUMP NO 1

4"-G (DI03)

10-VP-2108

10-VP-2109

4"-G (DI03)

10-I-601
TO GRIT REMOVAL
INFLUENT CHANNEL

12"-DR (DI02)

6"-DR (DI02)

12"x6"

6"x12"

VENT

6"-DR (DI02)

4"-DR (DI02)

3"-DR (DI02)

2"-DR (DI02)

LIT 2111

MOV 2112

M

SOV 8211

FI 8211

SOV 7001

SSL 2111

10-ME-2111
GRIT WASHER NO 1

6
GRIT WASHER NO 1 SKID

4"-FA (FR01)

E-STOP
HS 2111A
3
10-HS-2111
GRIT WASHER
NO 1

RUN YL 2120 · FOR HS 2120
FAULT YA 2120 · HOA HS 2120
480VAC
10-VCP-2120
COARSE SCREENING/GRIT

PI 8210

120VAC
9
10-VCP-2110
GRIT
AIR COMPRESSOR
PANEL

1/4"-PA (PE02)

1"-UW (PV01)

1/4"-PA (PE02)

10-I-606 (B)
FROM
GRIT PUMP NO 2

4"-G (DI03)

PI 8215

10-VP-2208

2"x1"

2"x1"

10-I-622
UTILITY WATER
FROM HIGH PRESSURE
BOOSTER PUMP SYSTEM

2"-UW (PV01)

120VAC
9
10-VCP-2210
GRIT
AIR COMPRESSOR
PANEL

1/4"-PA (PE02)

VENT

6"-DR (DI02)

4"-DR (DI02)

3"-DR (DI02)

2"-DR (DI02)

6"-DR (DI02)

LIT 2211

MOV 2212

M

SOV 8216

FI 8216

SOV 7002

SSL 2211

10-ME-2211
GRIT WASHER NO 2

6
GRIT WASHER NO 2 SKID

4"-FA (FR01)

10-VF-2210A

E-STOP
HS 2211A
3
10-HS-2211
GRIT WASHER
NO 2

10-VF-2210B

6"x4"

6"-FA (FR01)

8"-FA (FR01)

10-VF-XXXX

8"-FA (FR01)

10-I-621
TO ODOR
CONTROL
SYSTEM

10-ME-2120
COARSE SCREENING/GRIT
LODOR

10-I-604
FROM COARSE
SCREEN WASH
PRESSES

E-STOP HS 2120 · MOTION XS 2120

LIT 2120A · LIT 2120B · M

COARSE SCREENING
AND GRIT DUMPSTER

## GENERAL SHEET NOTES

1. INSTRUMENTS, FITTINGS AND INSTALLATION SHALL BE SUITABLE FOR CLASS 1, DIV 1 AREA CLASSIFICATION.
2. EQUIPMENT OPERATION AND SAFETY INTERLOCKS SHALL BE AS DEFINED BY THE GRIT REMOVAL SYSTEM VENDOR WITH ADDITIONAL REQUIREMENTS AS DETAILED IN SPECIFICATION SECTION 46 23 23.

## SHEET KEYNOTES

| | |
|---|---|
| 3 | FURNISHED AND INSTALLED BY CONTRACTOR. |
| 6 | FURNISHED BY GRIT REMOVAL SYSTEM VENDOR. |
| 9 | AIR SYSTEM PROVIDED BY VENDOR. |


J-U-B ENGINEERS, INC.
J-U-B ENGINEERS, INC.
392 E. Winchester St., Suite 300
Salt Lake City, UT 84107
Phone: 801.547.0393
www.jub.com

Subconsultant:
Stantec
Stantec
2890 E Cottonwood Pkwy
Suite 300, Salt Lake City, Ut
84121
Tel: +1.801.617.3200
www.stantec.com


AGENCY

REVIEW


REUSE OF DRAWINGS
J-U-B SHALL RETAIN ALL COMMON LAW, STATUTORY, COPYRIGHT AND OTHER RESERVED RIGHTS OF THESE DRAWINGS, AND THE SAME SHALL NOT BE REUSED WITHOUT J-U-B'S PRIOR WRITTEN CONSENT. ANY REUSE WITHOUT WRITTEN CONSENT BY J-U-B WILL BE AT CLIENTS SOLE RISK AND WITHOUT LIABILITY OR LEGAL EXPOSURE TO J-U-B.


| NO. | DESCRIPTION | BY | APR. | DATE |
|---|---|---|---|---|
| | REVISION | | | |

SPANISH FORK & MAPELTON WRF
SPANISH FORK CITY CORPORATION

INSTRUMENTATION AND CONTROL
GRIT WASHERS P&ID
GRIT REMOVAL EQUIPMENT PRE-PROCUREMENT - ADDENDUM NO 1

FILE : 55-20-124_10I-607
JUB PROJ. # : 55-20-124
DRAWN BY: UHB
DESIGN BY: BH
CHECKED BY: SR
ONE INCH
AT FULL SIZE, IF NOT ONE INCH, SCALE ACCORDINGLY
LAST UPDATED: 6/30/2022

DRAWING:
10-I-607

SHEET: 509 OF 691


Plot Date:6/30/2022 8:05 PM Plotted By: Pimaduwa-Hewage, Ranga
Date Created:5/2/2021 C:\PLANTCACHE\181301139_SPNSH FRK MAPLTN WRF DESIGN\PID DWG\55-20-124_10I-607.DWG

LIFT STATION PUMP NO 1 | LIFT STATION PUMP NO 2 | LIFT STATION PUMP NO 3 | LIFT STATION PUMP NO 4

WET WELL NO 2 | WET WELL NO 1

HMI | HEADWORKS PLC

ELECTRICAL ROOM | FIELD

EMERGENCY PUMP CONTROL PANEL 10-LCP-3100

120VAC | P1/P2/P3/P4 OFF | LOW LEVEL | PUMPS START | POWER ON | PUMPS OFF

10-VFD-3105 PUMP NO 1 VFD | 10-VFD-3205 PUMP NO 2 VFD | 10-VFD-3305 PUMP NO 3 VFD | 10-VFD-3405 PUMP NO 4 VFD

OVERRIDE PUMP START AND LOW LEVEL CUT OFF

RADAR | LT 3101 | LT 3102

10-I-605(A) FROM GRIT CHAMBERS

10-I-605(B) 30"-PI (DI02) FROM COARSE SCREEN BYPASS

05-I-602 24"-PDR (PV05) FROM PLANT DRAIN

10-SG-3101 | 10-SG-3103 | 10-SG-3102

10-VP-3104 | 10-VP-3204 | 10-VP-3304 | 10-VP-3404

10-P-3105 PUMP NO 1 | 10-P-3205 PUMP NO 2 | 10-P-3305 PUMP NO 3 | 10-P-3405 PUMP NO 4

20"x16" | 12"x20"

10-VC-3107 | 10-VC-3207 | 10-VC-3307 | 10-VC-3407

10-VP-3108 | 10-VP-3208 | 10-VP-3308 | 10-VP-3408

10-VP-3305

10-I-609 (B) TO HEADWORKS PLC

10-I-609 TO FINE SCREENS NO 1, 2 & 3

10-I-612(B) TO HEADWORKS PLC

10-I-612 TO FINE SCREENS NO 4, 5 & 6

## SHEET KEYNOTES

| | |
|---|---|
| 3 | FURNISHED AND INSTALLED BY CONTRACTOR. |
| 10 | EQUIPMENT LOCATED IN THE WET WELL SHALL BE RATED FOR CLASS 1 DIV 1. |
| 11 | INDICATORS TO BE LOCATED NO LESS THAN 40" ABOVE FINISHED FLOOR IN ORDER TO BE OUTSIDE CLASSIFIED BOUNDARY. |
| 18 | PROVIDE LEVEL INDICATOR WITH SUNSHIELD. |
| 19 | LEVEL SWITCH USED TO MEASURE WATER ON FLOOR AT 6"AFG. |


J-U-B ENGINEERS, INC.
J-U-B ENGINEERS, INC.
392 E. Winchester St., Suite 300
Salt Lake City, UT 84107
Phone: 801.547.0393
www.jub.com

Subconsultant:
Stantec
Stantec
2890 E Cottonwood Pkwy
Suite 300, Salt Lake City, Ut
84121
Tel: +1.801.617.3200
www.stantec.com


AGENCY

REVIEW


REUSE OF DRAWINGS
J-U-B SHALL RETAIN ALL COMMON LAW, STATUTORY, COPYRIGHT AND OTHER RESERVED RIGHTS OF THESE DRAWINGS, AND THE SAME SHALL NOT BE REUSED WITHOUT J-U-B'S PRIOR WRITTEN CONSENT. ANY REUSE WITHOUT WRITTEN CONSENT BY J-U-B WILL BE AT CLIENTS SOLE RISK AND WITHOUT LIABILITY OR LEGAL EXPOSURE TO J-U-B.


| NO. | DESCRIPTION | BY | APR. | DATE |
|---|---|---|---|---|
| | REVISION | | | |

SPANISH FORK & MAPELTON WRF
SPANISH FORK CITY CORPORATION

INSTRUMENTATION AND CONTROL
LIFT STATION - P&ID

FILE : 55-20-124 10I-608
JUB PROJ. # : 55-20-124
DRAWN BY: ARB
DESIGN BY: BH
CHECKED BY: SR
ONE INCH
AT FULL SIZE, IF NOT ONE INCH, SCALE ACCORDINGLY
LAST UPDATED: 6/30/2022

DRAWING:
10-I-608

SHEET: 510 OF 691


Plot Date:6/30/2022 8:05 PM Plotted By: Pimaduwa-Hewage, Ranga
Date Created:2/26/2021 C:\PLANTCAD\E\181301\39_SPNSH FRK MAPLTN WRF DESIGN\PID DWG\55-20-124_10I-608.DWG

## SHEET KEYNOTES

| | |
|---|---|
| 3 | FURNISHED AND INSTALLED BY CONTRACTOR. |
| 12 | LCS FIELD LOCATED NEXT TO EQUIPMENT. |
| 13 | SOLENOID VALVE TO BE EQUIPPED WITH MANUAL OVERRIDE VIA HOA. |
| 14 | FURNISHED BY FINE SCREEN VENDOR. |

MOTORIZED VALVE

PRESSURE PI 3701 — POSI CMD ZC 4101 — POSI FBK ZI 4101 — RDY YL 4101 — OPEN ZLO 4101 — CLSD ZLC 4101 — TORQ NAHH 4101 — FLOW FI 4101 — FAL 8311 — LAH 4105 — Q/R START CYCLE HS 4105 — WW VALVE 1 AUTO STATUS ZL 8301 — WW VALVE 2 AUTO STATUS ZL 8302 — SCREEN DUR TMR MK 4105A — RUN INT TMR MK 4105B — ETM KQI 4105 — O/C HS 4105 — RDY YL 4105A — YL 4105B — FAIL YA 4105B — E-STOP YA 4105C — SAL 4105 — FQ 4000

HMI

I 4101 — I 4101 — KC 8301 — I 4105 — 1 — 05-I-602 — FY 4000 — 10-I-611 — 10-I-612 — 10-I-614

PIT 3701 — ZC 4101 — ZI 4101 — YL 4101 — ZLO 4101 — ZLC 4101 — NAHH 4101 — FIT 4101 — FAL 8311 — LSH 4105 — LAH 4105 — HS 8301 — ZL 8301 — ZL 8302 — HS 8302 — YA 4105 — HMS 4105 — YL 4105A — HS 4105A — HS 4105B — ZL 4105 — YL 4105B — YA 4105B — YA 4105C — SAL 4105

HEADWORKS PLC — 10-VCP-3000 FINE SCREEN PLC — 10-LCP-1000 HEADWORKS PLC

OI (VENDOR DEFINED) — OI (VENDOR DEFINED)

RESET / E-STOP

HOR HS 4105A — START HMS 4105A — STOP HMS 4105B — RESET HMS 4105C — I 4105 — RUN YL 4105 — GEN FAULT YA 4105 — ETM KQI 4105 — OI — 3 — 10-RVSS-4105 INFLUENT FINE DRUM SCREEN RVSS STARTER — MCC

10-VCP-3000 FINE DRUM SCREEN VCP — 10-VCP-3000 FINE DRUM SCREEN VCP — ELECTRICAL ROOM — ELECTRICAL ROOM

PWR JI 4105 — SCREEN HIGH LEVEL LAH 4105 — RVSS RESET HMS 4105 — WW VALVE 1 OCA HS 8301 — WW VALVE 2 OCA HS 8302 — SCREEN O/R START CYCLE HS 4105A — GEN FAULT YA 4105 — FAULT RESET HMS 4105 — SCREEN RUN YL 4105 — E-STOP HS 4105B

FIELD — FIELD

10-I-608 (B) — FROM LIFT STATION COMMON HEADER DISCHARGE PRESSURE

LOR HS 4101A — CLSD ZLC 4101 — TORQ NAHH 4101 — OSC HS 4101B — OPND ZLO 4101 — ZIC 4101 — OI — 480VAC — 10-LCV-4101 VALVE ACTUATOR

10-I-611(B) — TO FINE SCREEN NO 3

10-I-610(B) — TO FUTURE FINE SCREEN NO 2

E-STOP HS 4105 — 3 — 12 — 10-HS-4105 FINE SCREEN

8"-FA (FR01) — 8"x12" — 12"x14" — 14"-FA (FR01) — 10-I-621 — TO ODOR CONTROL SYSTEM HEADER 1

10-VF-4105D

12"-FA (FR01) — 10-I-610 — FROM FINE SCREEN NO 2 ODOR CONTROL HEADER 1

4"-UW (DI01) — 10-I-612 — TO FINE SCREENS NO 4, 5, AND 6

6"x4" — 6"x4"

6"-UW (DI01) — 10-I-622 — SPRAY WASHWATER FROM HIGH PRESSURE BOOSTER PUMP SYSTEM

10-VB-4105A

4"-UW (DI01) — PI 8310 — FSL 8311 — 120VAC

10-VB-4105B

4"x1 1/2" — SOV 8301 — S — 13

1 1/2"x4" — SOV 8302 — S — 13

LSH 4105

FIT 4101 — 120VAC — LCV 4101 — M — 16"x24"

10-I-608 — FROM LIFT STATION — 30"-SI (DI02) — 30"x16" — 16"-SI (DI02) — M M — 10-VP-4100 — FE 4101

30"-SI (DI02) — 16"x30" — 16"-SI (DI02)

10-I-610(A) — TO FUTURE FINE SCREEN NO 2

10-I-611(A) — TO FINE SCREEN NO 3

SSL 4105 — M

10-SCR-4105 FINE SCREEN NO 1

10-I-615

14 — 10-ME-4105 FINE SCREEN SKID

SCREENINGS TO FINE SCREEN WASHPRESS NO 1

10-I-610 — FROM FINE SCREEN NO 2 DISCHARGE HEADER NO 1

30"x42" — 30"-SI (DI02) — 42"-SI (DI02)

30"-SI (DI02) — 10-I-612 — FROM FINE SCREEN HEADER NO 2

36"-SI (DI02) — 10-VP-4120 — 20-I-601 — TO SPLITTER BOX

36"-SI (DI02) — 10-VP-4220 — 20-I-601 — TO SPLITTER BOX


J-U-B ENGINEERS, INC.

J-U-B ENGINEERS, INC.
392 E. Winchester St., Suite 300
Salt Lake City, UT 84107
Phone: 801.547.0393
www.jub.com

Subconsultant:

Stantec
Stantec
2890 E Cottonwood Pkwy
Suite 300, Salt Lake City, Ut
84121
Tel: +1.801.617.3200
www.stantec.com


AGENCY

REVIEW


REUSE OF DRAWINGS
J-U-B SHALL RETAIN ALL COMMON LAW, STATUTORY, COPYRIGHT AND OTHER RESERVED RIGHTS OF THESE DRAWINGS, AND THE SAME SHALL NOT BE REUSED WITHOUT J-U-B'S PRIOR WRITTEN CONSENT. ANY REUSE WITHOUT WRITTEN CONSENT BY J-U-B WILL BE AT CLIENTS SOLE RISK AND WITHOUT LIABILITY OR LEGAL EXPOSURE TO J-U-B.


| NO. | DESCRIPTION | BY | APR. | DATE |
|---|---|---|---|---|
| | REVISION | | | |

SPANISH FORK & MAPELTON WRF
SPANISH FORK CITY CORPORATION

INSTRUMENTATION AND CONTROL
FINE DRUM SCREENS - I P&ID

FILE : 55-20-124 10I-609
JUB PROJ. # : 55-20-124
DRAWN BY: UHB
DESIGN BY: BH
CHECKED BY: SR
ONE INCH
AT FULL SIZE, IF NOT ONE INCH, SCALE ACCORDINGLY
LAST UPDATED: 6/30/2022

DRAWING:
10-I-609

SHEET: 511 OF 691

Plot Date:6/30/2022 8:05 PM Plotted By: Pimradiwa Hewage, Ranga
Date Created:5/15/2021 C:\PLANTCAD\HE\181301\99_SPNSH FRK MAPLTN WRF DESIGN\PID DWG\55-20-124_10I-609.DWG

## SHEET KEYNOTES

| | |
|---|---|
| 3 | FURNISHED AND INSTALLED BY CONTRACTOR. |
| 12 | LCS FIELD LOCATED NEXT TO EQUIPMENT. |
| 13 | SOLENOID VALVE TO BE EQUIPPED WITH MANUAL OVERRIDE VIA HOA. |
| 14 | FURNISHED BY FINE SCREEN VENDOR. |

MOTORIZED VALVE

POSI CMD ZC 4201 | POSI FBK ZI 4201 | RDY YL 4201 | OPEN ZLO 4201 | CLSD ZLC 4201 | TORQ NAHH 4201 | FLOW FI 4201

Q/R START CYCLE HS 4205 | WW VALVE 1 AUTO STATUS ZL 8401 | WW VALVE 2 AUTO STATUS ZL 8402 | SCREEN DUR TMR MK 4205A | RUN INT TMR MK 4205B

ETM KQI 4205

O/C HS 4205 | RDY YL 4205A | YL 4205B | FAIL YA 4205B | E-STOP YA 4205C | SAL 4205

HMI

I 4201 | KC 8401 | I 4105

ZC 4201 | ZI 4201 | YL 4201 | ZLO 4201 | ZLC 4201 | NAHH 4201 | FI 4201

LAH 4205 | LSH 4205 | LAH 4205

HS 8401 | ZL 8401 | ZL 8402 | HS 8402

YA 4205A | HMS 4205 | YL 4205A | HS 4205A | HS 4205B | ZL 4205 | YL 4205B | YA 4205B | YA 4205C | SAL 4205

10-VCP-3000
FINE SCREEN PLC

OI
(VENDOR DEFINED)

PWR JI 4205 | SCREEN HIGH LEVEL LAH 4205 | RVSS RESET HMS 4205

WW VALVE 1 OCA HS 8401 | WW VALVE 2 OCA HS 8402

SCREEN O/R START CYCLE HS 4205A | GEN FAULT YA 4205 | FAULT RESET HMS 4205 | SCREEN RUN YL 4205

E-STOP HS 4205B

10-VCP-3000
FINE DRUM SCREEN VCP

FIELD

RESET / E-STOP

HOR HS 4205A | START HMS 4205A | STOP HMS 4205B | RESET HMS 4205C

4205 | RUN YL 4205 | GEN FAULT YA 4205 | ETM KQI 4205 | OI

3 10-RVSS-4205
FUTURE INFLUENT FINE
DRUM SCREEN RVSS STARTER

MCC

ELECTRICAL ROOM

LOR HS 4201A | OSC HS 4201B | CLSD ZLC 4201 | TORQ NAHH 4201 | OPND ZLO 4201 | ZIC 4201 | OI

480VAC

10-LCV-4201
VALVE ACTUATOR

E-STOP HS 4205 (3, 12)

10-HS-4205
FINE SCREEN

8"-FA (FR01) → 10-VF-4205A → 8"x12" → 12"-FA (FR01) → 10-I-609
TO FINE SCREEN ODOR CONTROL HEADER NO 1

8"x12" → 8"-FA (FR01) → 10-I-611
FROM FINE SCREEN NO 3 ODOR CONTROL HEADER NO 1

SOV 8401 (13) | SOV 8402 (13)

4"x1 1/2"

XX"-UW (XXXX)

10-I-609(B)
SPRAY WASHWATER FROM HIGH PRESSURE BOOSTER PUMP SYSTEM

10-VB-4205B

1 1/2"x4"

120VAC

FIT 4201 | LCV 4201 | M

16"x24"

30"-SI (DI02)

10-I-608(A)
FROM LIFT STATION

10-VP-4200

M M

FE 4201

SSL 4205 | M

LSH 4205

10-SCR-4205
FUTURE FINE SCREEN NO 2

10-I-616

14

10-ME-4205
FUTURE FINE SCREEN SKID

TO FINE SCREEN WASHPRESS NO 2

10-I-611
FROM FINE SCREEN NO 3 DISCHARGE HEADER NO 1

30"-SI (DI02) → 10-I-609
TO DISCHARGE HEADER NO 1


J-U-B ENGINEERS, INC.

J-U-B ENGINEERS, INC.
392 E. Winchester St., Suite 300
Salt Lake City, UT 84107
Phone: 801.547.0393
www.jub.com

Subconsultant:

Stantec
Stantec
2890 E Cottonwood Pkwy
Suite 300, Salt Lake City, Ut
84121
Tel: +1.801.617.3200
www.stantec.com


AGENCY

REVIEW


REUSE OF DRAWINGS
J-U-B SHALL RETAIN ALL COMMON LAW, STATUTORY, COPYRIGHT AND OTHER RESERVED RIGHTS OF THESE DRAWINGS, AND THE SAME SHALL NOT BE REUSED WITHOUT J-U-B'S PRIOR WRITTEN CONSENT. ANY REUSE WITHOUT WRITTEN CONSENT BY J-U-B WILL BE AT CLIENTS SOLE RISK AND WITHOUT LIABILITY OR LEGAL EXPOSURE TO J-U-B.


| NO. | DESCRIPTION | BY | APR. | DATE |
|---|---|---|---|---|
| | REVISION | | | |

SPANISH FORK & MAPELTON WRF
SPANISH FORK CITY CORPORATION

INSTRUMENTATION AND CONTROL
FINE DRUM SCREENS - II P&ID

FILE : 55-20-124_10I-610
JUB PROJ. # : 55-20-124
DRAWN BY: UHB
DESIGN BY: BH
CHECKED BY: SR
ONE INCH
AT FULL SIZE, IF NOT ONE INCH, SCALE ACCORDINGLY
LAST UPDATED: 6/30/2022

DRAWING:
10-I-610

SHEET: 512 OF 691

Plot Date:6/30/2022 8:05 PM Plotted By: Pinnadwa-Hawage, Ranga
Date Created:5/27/2021 C:\PLANTCACHE\181301159_SPNSH FRK MAPLTN WRF DESIGN\PID DWG\55-20-124_10I-610.DWG

## SHEET KEYNOTES

| | |
|---|---|
| 3 | FURNISHED AND INSTALLED BY CONTRACTOR. |
| 12 | LCS FIELD LOCATED NEXT TO EQUIPMENT. |
| 13 | SOLENOID VALVE TO BE EQUIPPED WITH MANUAL OVERRIDE VIA HOA. |
| 14 | FURNISHED BY FINE SCREEN VENDOR. |

MOTORIZED VALVE

POSI CMD ZC 4301 | POSI FBK ZI 4301 | RDY YL 4301 | OPEN ZLO 4301 | CLSD ZLC 4301 | TORQ NAHH 4301 | FLOW FI 4301

LAH 4305

Q/R START CYCLE HS 4305 | WW VALVE 1 AUTO STATUS ZL 8301 | WW VALVE 2 AUTO STATUS ZL 8302 | SCREEN DUR TMR MK 4305A | RUN INT TMR MK 4305B

ETM KQI 4305

O/C HS 4305 | RDY YL 4305A | YL 4305B | FAIL YA 4305B | E-STOP YA 4305C | SAL 4305

HMI

I 4301 | I 4301 | KC 8301 | I 4305

10-I-609

ZC 4301 | ZI 4301 | YL 4301 | ZLO 4301 | ZLC 4301 | NAHH 4301 | FIT 4301

LSH 4305 | LAH 4305

HS 8501 | ZL 8501 | ZL 8502 | HS 8502

YA 4305A

HMS 4305 | YL 4305A | HS 4305A | HS 4305B | ZL 4305 | YL 4305B | YA 4305B | YA 4305C | SAL 4305

10-VCP-3000
FINE SCREEN PLC

OI
(VENDOR DEFINED)

10-VCP-3000
FINE DRUM SCREEN VCP

FIELD

PWR JI 4305 | SCREEN HIGH LEVEL LAH 4305 | RVSS RESET HMS 4305

WW VALVE 1 OCA HS 8501 | WW VALVE 2 OCA HS 8502

SCREEN O/R START CYCLE HS 4305A | GEN FAULT YA 4305 | FAULT RESET HMS 4305 | SCREEN RUN YL 4305

E-STOP HS 4305B

RESET / E-STOP

HOR HS 4305A | START HMS 4305A | STOP HMS 4305B | RESET HMS 4305C

I 4305 | RUN YL 4305 | GEN FAULT YA 4305 | ETM KQI 4305 | OI

3 INFLUENT FINE DRUM SCREEN RVSS STARTER

10-RVSS-4305

MCC

ELECTRICAL ROOM

LOR HS 4301A | OSC HS 4301B | CLSD ZLC 4301 | TORQ NAHH 4301 | OPND ZLO 4301 | ZIC 4301 | OI

480VAC

10-LCV-4301
VALVE ACTUATOR

E-STOP HS 4305 | 3 | 12

10-HS-4305
FINE SCREEN

8"-FA (FR01)

10-VF-4305B

8"-FA (FR01)

10-I-610
TO FINE SCREEN
ODOR CONTROL
HEADER NO 2

10-I-609(B)
SPRAY WASHWATER
FROM HIGH PRESSURE
BOOSTER PUMP SYSTEM

4"-UW (DI01)

10-VB-4305A

4"x1 1/2"

1 1/2"X4"

SOV 8501 S 13

SOV 8502 S 13

LSH 4305

120VAC

FIT 4301

LCV 4301 M

16"-SI (DI02)

10-I-608(A)
FROM LIFT
STATION

10-VP-4300

M M

FE 4301

16"-24"

SSL 4305 M

10-SCR-4305
FINE SCREEN NO 3

10-I-617

14

10-ME-4305
FINE SCREEN SKID

SCREENINGS
TO FINE SCREEN
WASHPRESS NO 3

30"-SI (DI02)

30"-SI (DI02)

10-I-610
TO FINE SCREEN
DISCHARGE HEADER
NO 1


J-U-B ENGINEERS, INC.

J-U-B ENGINEERS, INC.
392 E. Winchester St., Suite 300
Salt Lake City, UT 84107
Phone: 801.547.0393
www.jub.com

Subconsultant:

Stantec

Stantec
2890 E Cottonwood Pkwy
Suite 300, Salt Lake City, Ut
84121
Tel: +1.801.617.3200
www.stantec.com


AGENCY

REVIEW


REUSE OF DRAWINGS
J-U-B SHALL RETAIN ALL COMMON LAW, STATUTORY, COPYRIGHT AND OTHER RESERVED RIGHTS OF THESE DRAWINGS, AND THE SAME SHALL NOT BE REUSED WITHOUT J-U-B'S PRIOR WRITTEN CONSENT. ANY REUSE WITHOUT WRITTEN CONSENT BY J-U-B WILL BE AT CLIENTS SOLE RISK AND WITHOUT LIABILITY OR LEGAL EXPOSURE TO J-U-B.


| NO. | DESCRIPTION | BY | APR | DATE |
|---|---|---|---|---|
| | REVISION | | | |

SPANISH FORK & MAPELTON WRF
SPANISH FORK CITY CORPORATION

INSTRUMENTATION AND CONTROL
FINE DRUM SCREENS - III P&ID

FILE : 55-20-124_10I-611
JUB PROJ. # : 55-20-124
DRAWN BY: UHB
DESIGN BY: BH
CHECKED BY: SR
ONE INCH
AT FULL SIZE, IF NOT ONE INCH, SCALE ACCORDINGLY
LAST UPDATED: 6/30/2022

DRAWING:
10-I-611

SHEET: 513 OF 691


Plot Date:6/30/2022 8:06 PM Plotted By: Pinnaduwa-Hewage, Ranga
Date Created:5/27/2021 C:\PLANTCAD\HE1813001139_SPNSH FRK MAPLTN WRF DESIGN\PID DWG\55-20-124_10I-611.DWG

## SHEET KEYNOTES

| | |
|---|---|
| 3 | FURNISHED AND INSTALLED BY CONTRACTOR. |
| 12 | LCS FIELD LOCATED NEXT TO EQUIPMENT. |
| 13 | SOLENOID VALVE TO BE EQUIPPED WITH MANUAL OVERRIDE VIA HOA. |
| 14 | FURNISHED BY FINE SCREEN VENDOR. |

MOTORIZED VALVE

PRESSURE PI 3801 — HEADWORKS PLC

POSI CMD ZC 4401 — POSI FBK ZI 4401 — RDY YL 4401 — OPEN ZLO 4401 — CLSD ZLC 4401 — TORQ NAHH 4401 — FLOW FI 4401

FAL 8321 — LAH 4105

Q/R START CYCLE HS 4405 — WW VALVE 1 AUTO STATUS ZL 8601 — WW VALVE 2 AUTO STATUS ZL 8602 — SCREEN DUR TMR MK 4405A — RUN INT TMR MK 4405B

ETM KQI 4405

O/C HS 4405 — RDY YL 4405A — YL 4405B — FAIL YA 4405B — E-STOP YA 4405C — SAL 4405

HMI

I 4401 — I 4401 — 10-I-609 — KC 8601 — I 4405

PIT 3801 — ZC 4401 — ZI 4401 — YL 4401 — ZLO 4401 — ZLC 4401 — NAHH 4401 — FIT 4401 — FAL 8321 — LSH 4405 — LAH 4405 — HS 8601 — ZL 8601 — ZL 8602 — HS 8602 — YA 4405 — HMS 4405 — YL 4405A — HS 4405A — HS 4405B — ZL 4405 — YL 4405B — YA 4405B — YA 4405C — SAL 4405

10-VCP-3000 FINE SCREEN PLC

OI (VENDOR DEFINED)

10-VCP-3000 FINE DRUM SCREEN VCP

PWR JI 4405 — SCREEN HIGH LEVEL LAH 4405 — RVSS RESET HMS 4405 — WW VALVE 1 OCA HS 8601 — WW VALVE 2 OCA HS 8602 — SCREEN O/R START CYCLE HS 4405A — GEN FAULT YA 4405. — FAULT RESET HMS 4405. — SCREEN RUN YL 4405. — E-STOP HS 4405B

RESET / E-STOP

HOR HS 4405A — START HMS 4405A — STOP HMS 4405B — RESET HMS 4405C — RUN YL 4405 — GEN FAULT YA 4405 — ETM KQI 4405 — I 4405 — OI

3 INFLUENT FINE DRUM SCREEN RVSS STARTER — 10-RVSS-4105 — MCC

ELECTRICAL ROOM

FIELD

10-I-608 (B) — FROM LIFT STATION COMMON HEADER DISCHARGE PRESSURE

LOR HS 4401A — CLSD ZLC 4401 — TORQ NAHH 4401 — OSC HS 4401B — OPND ZLO 4401 — ZIC 4401 — OI — 480VAC — 10-LCV-4401 VALVE ACTUATOR

10-I-614(B) — TO FINE SCREEN NO 6

10-I-613(B) — TO FUTURE FINE SCREEN NO 5

E-STOP HS 4405 (3, 12) — 10-HS-4405 FINE SCREEN

8"-FA (FR01) — 10-VF-4405B — 8"x12" — 12"x14" — 14"-FA (FR01) — 10-I-621 — TO ODOR CONTROL SYSTEM HEADER NO 2

12"-FA (FR01) — 10-I-613 — FROM FINE SCREEN NO 5 ODOR CONTROL HEADER NO 2

120VAC — PI 8320 — FSL 8321

10-I-609 — SPRAY WASHWATER FROM HIGH PRESSURE BOOSTER PUMP SYSTEM — 4"-UW (DI01 — 10-VB-4405C — 10-VB-4405A — 4"x1 1/2" — 1 1/2"x4"

SOV 8601 (S, 13) — SOV 8602 (S, 13) — LSH 4405

120VAC — FIT 4401 — LCV 4401 (M) — 16"x24"

10-I-608 (A) — FROM LIFT STATION — 30"-SI (DI02) — 30"x16" — 16"-SI (DI02) — 10-VP-4400 — M M — FE 4401

SSL 4405 — M

10-SCR-4405 FINE SCREEN NO 4

30"-SI (DI02) — 10-I-613(A) — TO FUTURE FINE SCREEN NO 5

16"x30"

16"-SI (DI02) — 10-I-614(A) — TO FINE SCREEN NO 6

10-I-618

14 — 10-ME-4405 FINE SCREEN SKID

SCREENINGS TO FINE SCREEN WASHPRESS NO 4

10-I-613 — FROM FINE SCREEN NO 5 DISCHARGE HEADER NO 2 — 30"-SI (DI02) — 10-I-609 — TO FINE SCREEN HEADER NO 1


J-U-B ENGINEERS, INC.

J-U-B ENGINEERS, INC.
392 E. Winchester St., Suite 300
Salt Lake City, UT 84107
Phone: 801.547.0393
www.jub.com

Subconsultant:

Stantec
Stantec
2890 E Cottonwood Pkwy
Suite 300, Salt Lake City, Ut
84121
Tel: +1.801.617.3200
www.stantec.com


AGENCY

REVIEW


REUSE OF DRAWINGS
J-U-B SHALL RETAIN ALL COMMON LAW, STATUTORY, COPYRIGHT AND OTHER RESERVED RIGHTS OF THESE DRAWINGS, AND THE SAME SHALL NOT BE REUSED WITHOUT J-U-B'S PRIOR WRITTEN CONSENT. ANY REUSE WITHOUT WRITTEN CONSENT BY J-U-B WILL BE AT CLIENTS SOLE RISK AND WITHOUT LIABILITY OR LEGAL EXPOSURE TO J-U-B.


| NO. | DESCRIPTION | BY | APR | DATE |
|---|---|---|---|---|
| | REVISION | | | |

SPANISH FORK & MAPELTON WRF
SPANISH FORK CITY CORPORATION

INSTRUMENTATION AND CONTROL
FINE DRUM SCREENS - IV P&ID

FILE : 55-20-124_10I-612
JUB PROJ. # : 55-20-124
DRAWN BY: UHB
DESIGN BY: BH
CHECKED BY: SR
ONE INCH
AT FULL SIZE, IF NOT ONE INCH, SCALE ACCORDINGLY
LAST UPDATED: 6/30/2022

DRAWING:
10-I-612

SHEET: 514 OF 691


Plot Date:6/30/2022 8:06 PM Plotted By: Pinnaduwa-Hewage, Ranga
Date Created:8/27/2021 C:\PLANTCAD\HE1813011\39_SPNSH FRK MAPLTN WRF DESIGN\PID DWG\55-20-124_10I-612.DWG

## SHEET KEYNOTES

| | |
|---|---|
| 3 | FURNISHED AND INSTALLED BY CONTRACTOR. |
| 12 | LCS FIELD LOCATED NEXT TO EQUIPMENT. |
| 13 | SOLENOID VALVE TO BE EQUIPPED WITH MANUAL OVERRIDE VIA HOA. |
| 14 | FURNISHED BY FINE SCREEN VENDOR. |

MOTORIZED VALVE

POSI CMD ZC 4501 | POSI FBK ZI 4501 | RDY YL 4501 | OPEN ZLO 4201 | CLSD ZLC 4201 | TORQ NAHH 4201 | FLOW FI 4201

LAH 4505

Q/R START CYCLE HS 4505 | WW VALVE 1 AUTO STATUS ZL 8701 | WW VALVE 2 AUTO STATUS ZL 8702 | SCREEN DUR TMR MK 4505A | RUN INT TMR MK 4505B

ETM KQI 4505

O/C HS 4505 | RDY YL 4505A | YL 4505B | FAIL YA 4505B | E-STOP YA 4505C | SAL 4505

HMI

I 4501

KC 8701

I 4505

ZC 4501 | ZI 4501 | YL 4501 | ZLO 4501 | ZLC 4501 | NAHH 4501 | FI 4501

LSH 4505 | LAH 4505

HS 8701 | ZL 8701 | ZL 8702 | HS 8702

YA 4505A | HMS 4505 | YL 4505A | HS 4505A | HS 4505B | ZL 4505 | YL 4505B | YA 4505B | YA 4505C | SAL 4505

10-VCP-3000
FINE SCREEN PLC

10-VCP-3000
FINE SCREEN PLC

OI
(VENDOR DEFINED)

OI
(VENDOR DEFINED)

RESET / E-STOP

HOR HS 4505A | START HMS 4505A | STOP HMS 4505B | RESET HMS 4505C

4505 | RUN YL 4505 | GEN FAULT YA 4505 | ETM KQI 4505 | OI

3 10-RVSS-4505
FUTURE INFLUENT FINE
DRUM SCREEN RVSS STARTER

MCC

10-VCP-3000
FINE DRUM SCREEN VCP

SCREEN HIGH LEVEL PWR JI 4505 | LAH 4505

RVSS RESET HMS 4505

WW VALVE 1 OCA HS 8701 | WW VALVE 2 OCA HS 8702

SCREEN O/R START CYCLE HS 4505A | GEN FAULT YA 4505 | FAULT RESET HMS 4505 | SCREEN RUN YL 4505

E-STOP HS 4505B

10-VCP-3000
FINE DRUM SCREEN VCP

ELECTRICAL ROOM

ELECTRICAL ROOM

FIELD

FIELD

LOR HS 4501A | OSC HS 4501B

CLSD ZLC 4501 | OPND ZLO 4501

TORQ NAHH 4501 | ZIC 4501

OI

480VAC

10-LCV-4501
VALVE ACTUATOR

E-STOP HS 4505 (3) (12)

10-HS-4505
FINE SCREEN

8"x12"

12"-FA-(FR01)

10-I-612

TO FINE SCREEN
ODOR CONTROL
HEADER NO 2

10-VF-4505C

8"-FA (FR01)

10-I-614

FROM FINE
SCREEN NO 6
ODOR CONTROL
HEADER NO 2

SOV 8701 (13)

4"x1 1/2"

XX"-UW (XXXX)

10-I-609

SPRAY WASHWATER
FROM HIGH PRESSURE
BOOSTER PUMP SYSTEM

10-VB-4505D

1 1/2"x4"

SOV 8702 (13)

LSH 4505

120VAC

FIT 4501

LCV 4501

16"x24"

SSL 4505 M

30"-SI (DI02)

10-I-612(A)

FROM LIFT
STATION

10-VP-4500

FE 4501

10-SCR-4505
FUTURE
FINE SCREEN NO 5

10-I-615

14

10-ME-4505
FUTURE FINE SCREEN SKID

SCREENINGS
TO FINE SCREEN
WASHPRESS NO 5

10-I-614

FROM FINE SCREEN NO 6
DISCHARGE HEADER NO 2

30"-SI-(DI02)

10-I-612

TO DISCHARGE
HEADER NO 2


J-U-B ENGINEERS, INC.

J-U-B ENGINEERS, INC.
392. E. Winchester St., Suite 300
Salt Lake City, UT 84107
Phone: 801.547.0393
www.jub.com

Subconsultant:

Stantec

Stantec
2890 E Cottonwood Pkwy
Suite 300, Salt Lake City, Ut
84121
Tel: +1.801.617.3200
www.stantec.com


AGENCY

REVIEW


REUSE OF DRAWINGS
J-U-B SHALL RETAIN ALL COMMON LAW, STATUTORY, COPYRIGHT AND OTHER RESERVED RIGHTS OF THESE DRAWINGS, AND THE SAME SHALL NOT BE REUSED WITHOUT J-U-B'S PRIOR WRITTEN CONSENT. ANY REUSE WITHOUT WRITTEN CONSENT BY J-U-B WILL BE AT CLIENTS SOLE RISK AND WITHOUT LIABILITY OR LEGAL EXPOSURE TO J-U-B.


| NO. | DESCRIPTION | BY | APR. | DATE |
|---|---|---|---|---|
| | REVISION | | | |

SPANISH FORK & MAPELTON WRF
SPANISH FORK CITY CORPORATION

INSTRUMENTATION AND CONTROL
FINE DRUM SCREENS - V P&ID

FILE : 55-20-124_10I-613
JUB PROJ. # : 55-20-124
DRAWN BY: UHB
DESIGN BY: BH
CHECKED BY: SR

ONE INCH
AT FULL SIZE, IF NOT ONE INCH, SCALE ACCORDINGLY

LAST UPDATED: 6/30/2022

DRAWING:
10-I-613

SHEET: 515 OF 691

Plot Date:6/30/2022 8:06 PM Plotted By: Pinnaduwa-Hewage, Ranga
Date Created:8/27/2021 C:\PLANTCACHE\18130\139_SPNSH FRK MAPLTN WRF DESIGN\PID DWG\55-20-124_10I-613.DWG

## SHEET KEYNOTES

| | |
|---|---|
| 3 | FURNISHED AND INSTALLED BY CONTRACTOR. |
| 12 | LCS FIELD LOCATED NEXT TO EQUIPMENT. |
| 13 | SOLENOID VALVE TO BE EQUIPPED WITH MANUAL OVERRIDE VIA HOA. |
| 14 | FURNISHED BY FINE SCREEN VENDOR. |

MOTORIZED VALVE

POSI CMD ZC 4601 | POSI FBK ZI 4601 | RDY YL 4601 | OPEN ZLO 4601 | CLSD ZLC 4601 | TORQ NAHH 4601 | FLOW FI 4601

LAH 4605

Q/R START CYCLE HS 4605 | WW VALVE 1 AUTO STATUS ZL 8301 | WW VALVE 2 AUTO STATUS ZL 8302 | SCREEN DUR TMR MK 4605A | RUN INT TMR MK 4605B

ETM KQI 4605

O/C HS 4605 | RDY YL 4605A | YL 4605B | FAIL YA 4605B | E-STOP YA 4605C | SAL 4605

HMI

I 4601 | I 4601 | 10-I-609 | KC 8801 | I 4605

ZC 4601 | ZI 4601 | YL 4601 | ZLO 4601 | ZLC 4601 | NAHH 4601 | FIT 4601

LSH 4605 | LAH 4605

HS 8801 | ZL 8801 | ZL 8802 | HS 8802

YA 4605A

HMS 4605 | YL 4605A | HS 4605A | HS 4605B | ZL 4605 | YL 4605B | YA 4605B | YA 4605C | SAL 4605

10-VCP-3000
FINE SCREEN PLC

OI
(VENDOR DEFINED)

PWR JI 4605 | SCREEN HIGH LEVEL LAH 4605 | RVSS RESET HMS 4605

WW VALVE 1 OCA HS 8801 | WW VALVE 2 OCA HS 8802

SCREEN O/R START CYCLE HS 4605A | GEN FAULT YA 4605 | FAULT RESET HMS 4605 | SCREEN RUN YL 4605

E-STOP HS 4605B

10-VCP-3000
FINE DRUM SCREEN VCP

FIELD

RESET / E-STOP

HOR HS 4605A | START HMS 4605A | STOP HMS 4605B | RESET HMS 4605C

I 4605 | RUN YL 4605 | GEN FAULT YA 4605 | ETM KQI 4605 | OI

3 INFLUENT FINE DRUM SCREEN RVSS STARTER

10-RVSS-4605

MCC

ELECTRICAL ROOM

LOR HS 4601A | OSC HS 4601B | CLSD ZLC 4601 | TORQ NAHH 4601 | OPND ZLO 4601 | ZIC 4601 | OI

480VAC

10-LCV-4601
VALVE ACTUATOR

E-STOP HS 4605 | 3 | 12

10-HS-4605
FINE SCREEN

8"-FA (FR01) — 10-VF-4605B — 8"-FA (FR01) — 10-I-613
TO FINE SCREEN ODOR CONTROL HEADER NO 2

10-I-609
4"-UW (DI01)
SPRAY WASHWATER FROM HIGH PRESSURE BOOSTER PUMP SYSTEM

4"x1 1/2"

10-VB-4605A

1 1/2"x4"

SOV 8801 S 13

SOV 8802 S 13

120VAC

FIT 4601

LCV 4601 M

16"x24"

10-I-612(A)
16"-SI (DI02)
FROM LIFT STATION

10-VP-4600

M M

FE 4601

SSL 4605 M

LSH 4605

10-SCR-4605
FINE SCREEN NO 6

10-I-620

14

10-ME-4605
FINE SCREEN SKID

SCREENINGS TO FINE SCREEN WASHPRESS NO 6

30"-SI (DI02) — 30"-SI (DI02) — 10-I-613
TO FINE SCREEN DISCHARGE HEADER NO 2


J-U-B ENGINEERS, INC.

J-U-B ENGINEERS, INC.
392 E. Winchester St., Suite 300
Salt Lake City, UT 84107
Phone: 801.547.0393
www.jub.com

Subconsultant:

Stantec

Stantec
2890 E Cottonwood Pkwy
Suite 300, Salt Lake City, Ut
84121
Tel: +1.801.617.3200
www.stantec.com


AGENCY

REVIEW


REUSE OF DRAWINGS
J-U-B SHALL RETAIN ALL COMMON LAW, STATUTORY, COPYRIGHT AND OTHER RESERVED RIGHTS OF THESE DRAWINGS, AND THE SAME SHALL NOT BE REUSED WITHOUT J-U-B'S PRIOR WRITTEN CONSENT. ANY REUSE WITHOUT WRITTEN CONSENT BY J-U-B WILL BE AT CLIENTS SOLE RISK AND WITHOUT LIABILITY TO CLIENT. EXPOSURE TO J-U-B


| NO. | DESCRIPTION | BY | APR | DATE |
|---|---|---|---|---|
| | REVISION | | | |

SPANISH FORK & MAPELTON WRF
SPANISH FORK CITY CORPORATION

INSTRUMENTATION AND CONTROL
FINE DRUM SCREENS - VI P&ID

FILE : 55-20-124_10I-614
JUB PROJ. # : 55-20-124
DRAWN BY: UHB
DESIGN BY: BH
CHECKED BY: SR
ONE INCH
AT FULL SIZE, IF NOT ONE INCH, SCALE ACCORDINGLY
LAST UPDATED: 6/30/2022

DRAWING:
10-I-614

SHEET: 516 OF 691


Plot Date:6/30/2022 8:06 PM Plotted By: Pinnaduwa-Hewage, Ranga
Date Created:8/27/2021 C:\PLANTCAC\HE\181301139_SPNSH FRK MAPLTN WRF DESIGN\PID DWG\55-20-124_10I-614.DWG

## GENERAL SHEET NOTES

1. INSTRUMENTS, FITTINGS AND INSTALLATION SHALL BE SUITABLE FOR CLASS 1, DIV 1 AREA CLASSIFICATION.
2. EQUIPMENT OPERATION AND SAFETY INTERLOCKS SHALL BE AS DEFINED BY THE MASTER SCREENINGS VENDOR WITH ADDITIONAL REQUIREMENT AS DETAILED IN SPECIFICATION SECTION 46 21 73.

## SHEET KEYNOTES

| | |
|---|---|
| 3 | FURNISHED AND INSTALLED BY CONTRACTOR. |
| 14 | FURNISHED BY THE SCREEN VENDOR. |

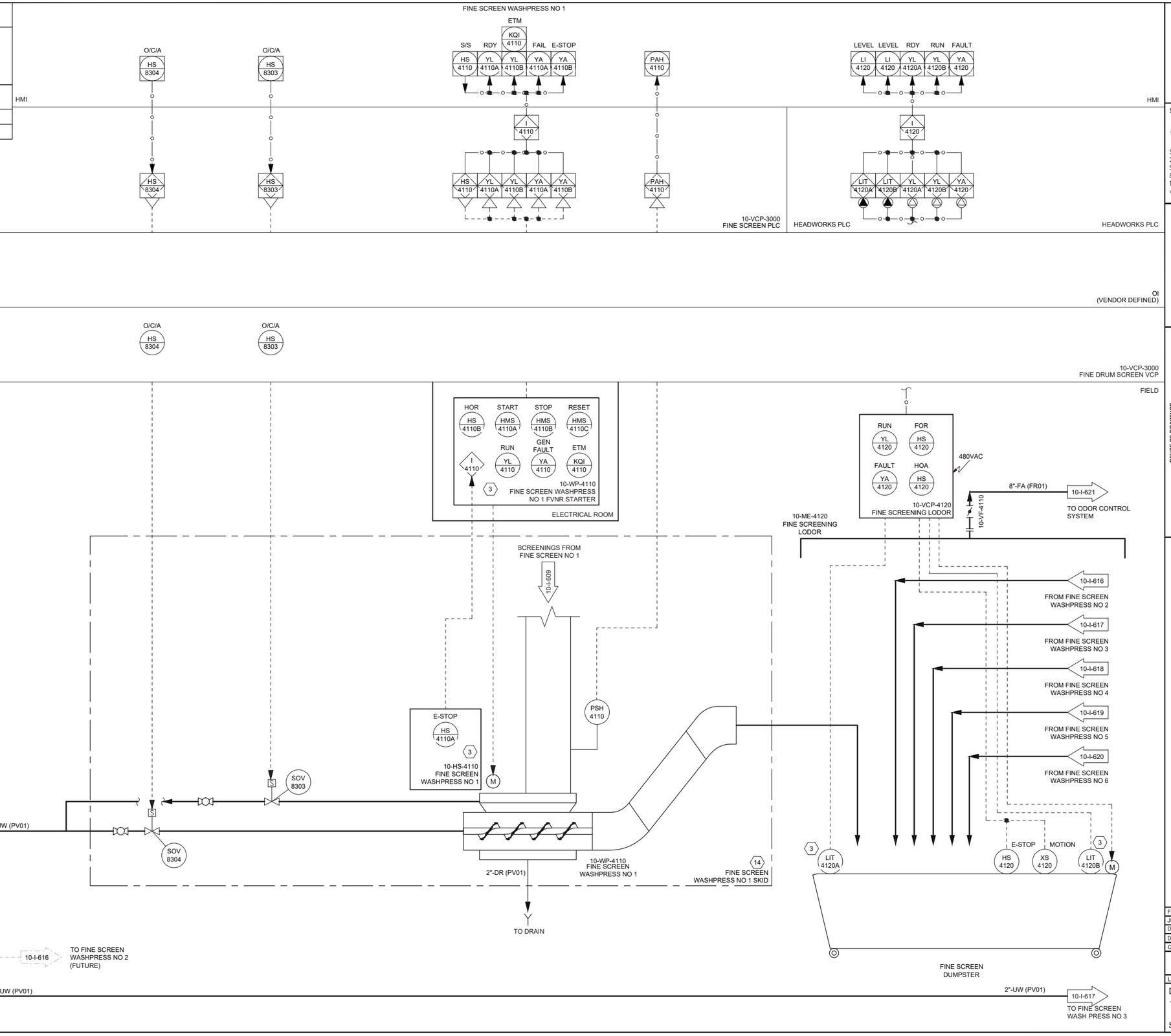



J-U-B ENGINEERS, INC.

J-U-B ENGINEERS, INC.
392 E. Winchester St., Suite 300
Salt Lake City, UT 84107
Phone: 801.547.0393
www.jub.com

Subconsultant:

Stantec
Stantec
2890 E Cottonwood Pkwy
Suite 300, Salt Lake City, Ut 84121
Tel: +1.801.617.3200
www.stantec.com


AGENCY

REVIEW


REUSE OF DRAWINGS
J-U-B SHALL RETAIN ALL COMMON LAW, STATUTORY, COPYRIGHT AND OTHER RESERVED RIGHTS OF THESE DRAWINGS, AND THE SAME SHALL NOT BE REUSED WITHOUT J-U-B'S PRIOR WRITTEN CONSENT. ANY REUSE WITHOUT WRITTEN CONSENT BY J-U-B WILL BE AT CLIENTS SOLE RISK AND WITHOUT LIABILITY OR LEGAL EXPOSURE TO J-U-B.


| NO. | DESCRIPTION | BY | APR. | DATE |
|---|---|---|---|---|
| | REVISION | | | |

SPANISH FORK & MAPELTON WRF
SPANISH FORK CITY CORPORATION

INSTRUMENTATION AND CONTROL
FINE DRUM SCREENINGS WASH PRESS - I P&ID

| | |
|---|---|
| FILE : | 55-20-124_10I-615 |
| JUB PROJ. # : | 55-20-124 |
| DRAWN BY: | ARB |
| DESIGN BY: | BH |
| CHECKED BY: | SR |

ONE INCH
AT FULL SIZE, IF NOT ONE INCH, SCALE ACCORDINGLY

LAST UPDATED: 6/30/2022

DRAWING:
10-I-615

SHEET: 517 OF 691


Plot Date:6/30/2022 8:06 PM Plotted By: Pinnduwa-Hewage, Ranga
Date Created:6/1/2021 C:\PLANTCAD\HE\181301\39_SPNSH FRK MAPLTN WRF DESIGN\PID DWG\55-20-124_10I-615.DWG

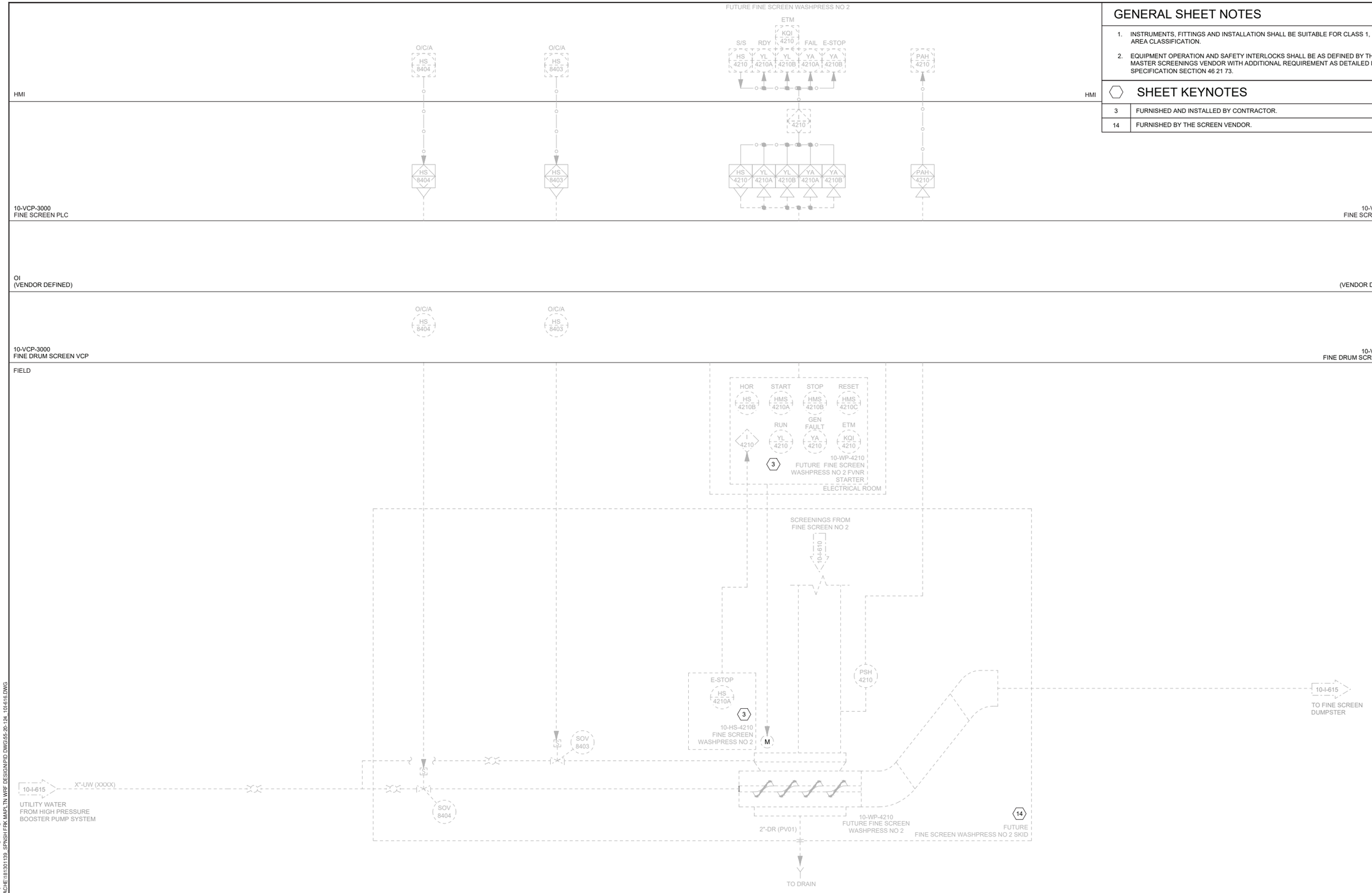


## GENERAL SHEET NOTES

1. INSTRUMENTS, FITTINGS AND INSTALLATION SHALL BE SUITABLE FOR CLASS 1, DIV 1 AREA CLASSIFICATION.
2. EQUIPMENT OPERATION AND SAFETY INTERLOCKS SHALL BE AS DEFINED BY THE MASTER SCREENINGS VENDOR WITH ADDITIONAL REQUIREMENT AS DETAILED IN SPECIFICATION SECTION 46 21 73.

## SHEET KEYNOTES

| | |
|---|---|
| 3 | FURNISHED AND INSTALLED BY CONTRACTOR. |
| 14 | FURNISHED BY THE SCREEN VENDOR. |


J-U-B ENGINEERS, INC.

J-U-B ENGINEERS, INC.
392 E. Winchester St., Suite 300
Salt Lake City, UT 84107
Phone: 801.547.0393
www.jub.com

Subconsultant:

Stantec

Stantec
2890 E Cottonwood Pkwy
Suite 300, Salt Lake City, Ut
84121
Tel: +1.801.617.3200
www.stantec.com


AGENCY

REVIEW


REUSE OF DRAWINGS
J-U-B SHALL RETAIN ALL COMMON LAW, STATUTORY, COPYRIGHT AND OTHER RESERVED RIGHTS OF THESE DRAWINGS, AND THE SAME SHALL NOT BE REUSED WITHOUT J-U-B'S PRIOR WRITTEN CONSENT. ANY REUSE WITHOUT WRITTEN CONSENT BY J-U-B WILL BE AT CLIENTS SOLE RISK AND WITHOUT LIABILITY OR LEGAL EXPOSURE TO J-U-B.


| NO. | DESCRIPTION | BY | APR. | DATE |
|---|---|---|---|---|
| | REVISION | | | |

SPANISH FORK & MAPELTON WRF
SPANISH FORK CITY CORPORATION

INSTRUMENTATION AND CONTROL
FINE DRUM SCREENINGS WASH PRESS - II P&ID

FILE : 55-20-124_10I-616
JUB PROJ. # : 55-20-124
DRAWN BY: ARB
DESIGN BY: BH
CHECKED BY: SR

ONE INCH
AT FULL SIZE, IF NOT ONE INCH, SCALE ACCORDINGLY

LAST UPDATED: 6/30/2022

DRAWING:
10-I-616

SHEET: 518 OF 691


Plot Date:6/30/2022 8:06 PM Plotted By: Pinnaduwa-Hewage, Ranga
Date Created:6/1/2021 C:\PLANTCACHE\181301139_SPNSH FRK MAPLTN WRF DESIGN\PID DWG\55-20-124_10I-616.DWG

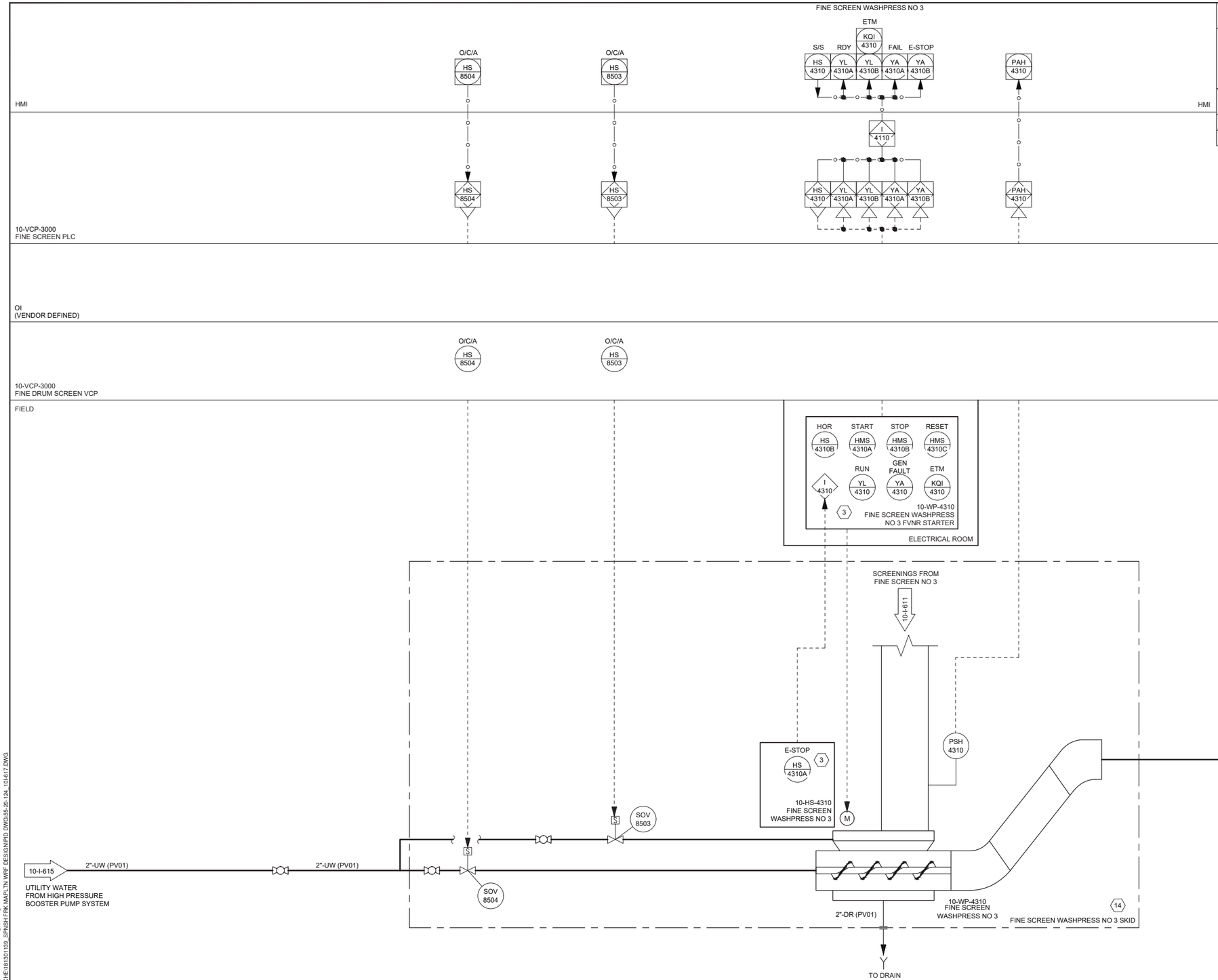


## GENERAL SHEET NOTES

1. INSTRUMENTS, FITTINGS AND INSTALLATION SHALL BE SUITABLE FOR CLASS 1, DIV 1 AREA CLASSIFICATION.
2. EQUIPMENT OPERATION AND SAFETY INTERLOCKS SHALL BE AS DEFINED BY THE MASTER SCREENINGS VENDOR WITH ADDITIONAL REQUIREMENT AS DETAILED IN SPECIFICATION SECTION 46 21 73.

## SHEET KEYNOTES

| | |
|---|---|
| 3 | FURNISHED AND INSTALLED BY CONTRACTOR. |
| 14 | FURNISHED BY THE SCREEN VENDOR. |


J-U-B ENGINEERS, INC.

J-U-B ENGINEERS, INC.
392. E. Winchester St., Suite 300
Salt Lake City, UT 84107
Phone: 801.547.0393
www.jub.com

Subconsultant:

Stantec

Stantec
2890 E Cottonwood Pkwy
Suite 300, Salt Lake City, Ut
84121
Tel: +1.801.617.3200
www.stantec.com


AGENCY

REVIEW


REUSE OF DRAWINGS

J-U-B SHALL RETAIN ALL COMMON LAW, STATUTORY, COPYRIGHT AND OTHER RESERVED RIGHTS OF THESE DRAWINGS, AND THE SAME SHALL NOT BE REUSED WITHOUT J-U-B'S PRIOR WRITTEN CONSENT. ANY REUSE WITHOUT WRITTEN CONSENT BY J-U-B WILL BE AT CLIENT'S SOLE RISK AND WITHOUT LIABILITY OR LEGAL EXPOSURE TO J-U-B.


| NO. | DESCRIPTION | BY | APR. | DATE |
|---|---|---|---|---|
| | REVISION | | | |

# SPANISH FORK & MAPELTON WRF
# SPANISH FORK CITY CORPORATION

## INSTRUMENTATION AND CONTROL
## FINE DRUM SCREENINGS WASH PRESS - III P&ID

FILE : 55-20-124 10I-617
JUB PROJ. # : 55-20-124
DRAWN BY: ARB
DESIGN BY: BH
CHECKED BY: SR
ONE INCH
AT FULL SIZE, IF NOT ONE INCH, SCALE ACCORDINGLY
LAST UPDATED: 6/30/2022

DRAWING:
10-I-617

SHEET: 519 OF 691

Plot Date:6/30/2022 8:06 PM Plotted By: Pinnaduwa-Hewage, Ranga
Date Created:6/17/2021 C:\PLANTCACHE\18130139_SPNSH FRK MAPLTN WRF DESIGN\PID DWG\55-20-124_10I-617.DWG

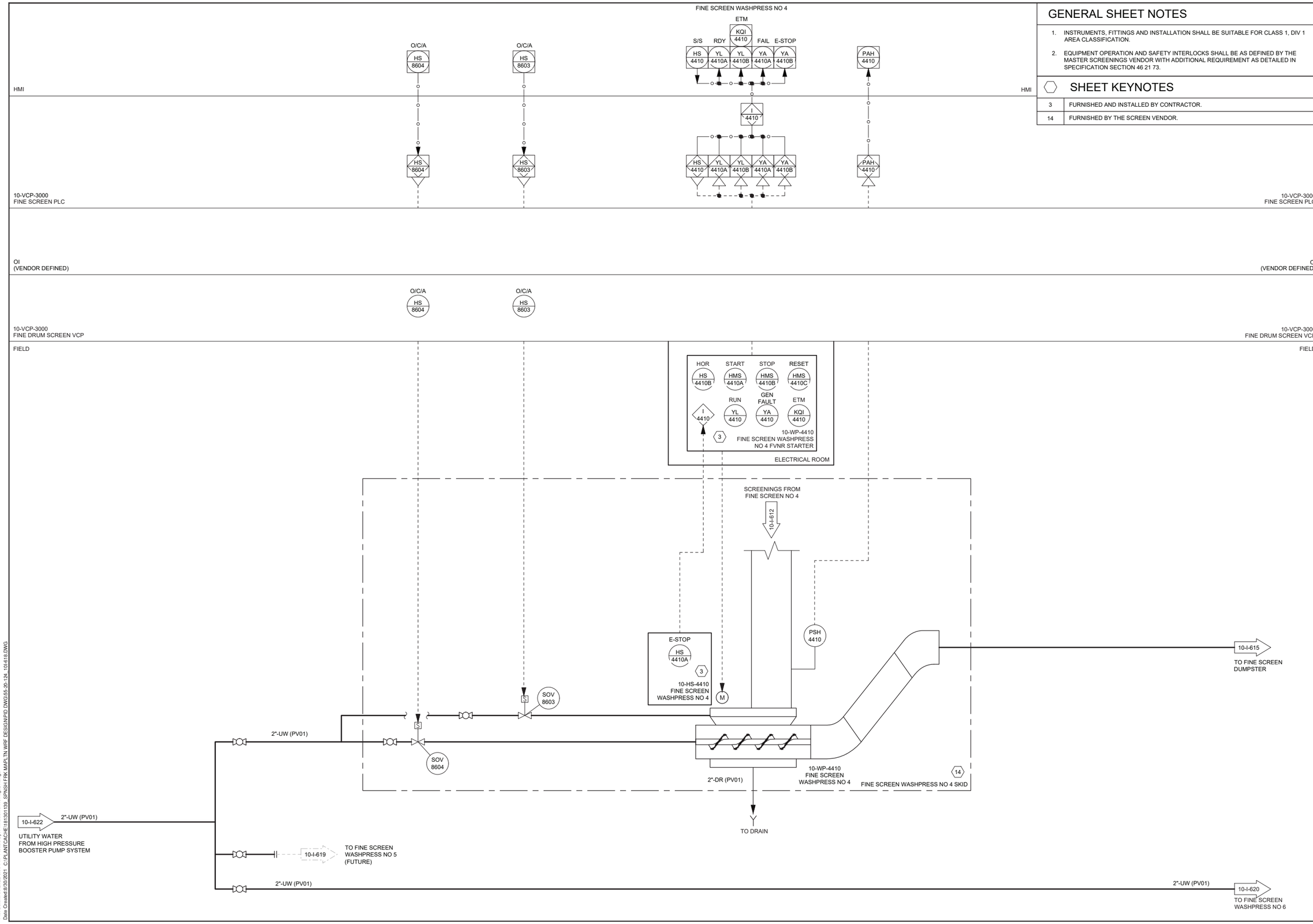


## GENERAL SHEET NOTES

1. INSTRUMENTS, FITTINGS AND INSTALLATION SHALL BE SUITABLE FOR CLASS 1, DIV 1 AREA CLASSIFICATION.
2. EQUIPMENT OPERATION AND SAFETY INTERLOCKS SHALL BE AS DEFINED BY THE MASTER SCREENINGS VENDOR WITH ADDITIONAL REQUIREMENT AS DETAILED IN SPECIFICATION SECTION 46 21 73.

## SHEET KEYNOTES

| | |
|---|---|
| 3 | FURNISHED AND INSTALLED BY CONTRACTOR. |
| 14 | FURNISHED BY THE SCREEN VENDOR. |


J-U-B ENGINEERS, INC.
J-U-B ENGINEERS, INC.
392. E. Winchester St., Suite 300
Salt Lake City, UT 84107
Phone: 801.547.0393
www.jub.com

Subconsultant:
Stantec
Stantec
2890 E Cottonwood Pkwy
Suite 300, Salt Lake City, Ut 84121
Tel: +1.801.617.3200
www.stantec.com


AGENCY

REVIEW


REUSE OF DRAWINGS
J-U-B SHALL RETAIN ALL COMMON LAW, STATUTORY, COPYRIGHT AND OTHER RESERVED RIGHTS OF THESE DRAWINGS, AND THE SAME SHALL NOT BE REUSED WITHOUT J-U-B'S PRIOR WRITTEN CONSENT. ANY REUSE WITHOUT WRITTEN CONSENT BY J-U-B WILL BE AT CLIENT'S SOLE RISK AND WITHOUT LIABILITY OR LEGAL EXPOSURE TO J-U-B.


| NO. | DESCRIPTION | BY | APR. | DATE |
|---|---|---|---|---|
| | REVISION | | | |

# SPANISH FORK & MAPELTON WRF
# SPANISH FORK CITY CORPORATION

INSTRUMENTATION AND CONTROL
FINE DRUM SCREENINGS WASH PRESS - IV P&ID

FILE : 55-20-124 10I-618
JUB PROJ. # : 55-20-124
DRAWN BY: ARB
DESIGN BY: BH
CHECKED BY: SR
ONE INCH
AT FULL SIZE, IF NOT ONE INCH, SCALE ACCORDINGLY
LAST UPDATED: 6/30/2022

DRAWING:
10-I-618

SHEET: 520 OF 691

Plot Date:6/30/2022 8:06 PM Plotted By: Pinnaduwa-Hewage, Ranga
Date Created:8/30/2021 C:\PLANTCACHE\18130139_SPNSH FRK MAPLTN WRF DESIGN\PID DWG\55-20-124_10I-618.DWG

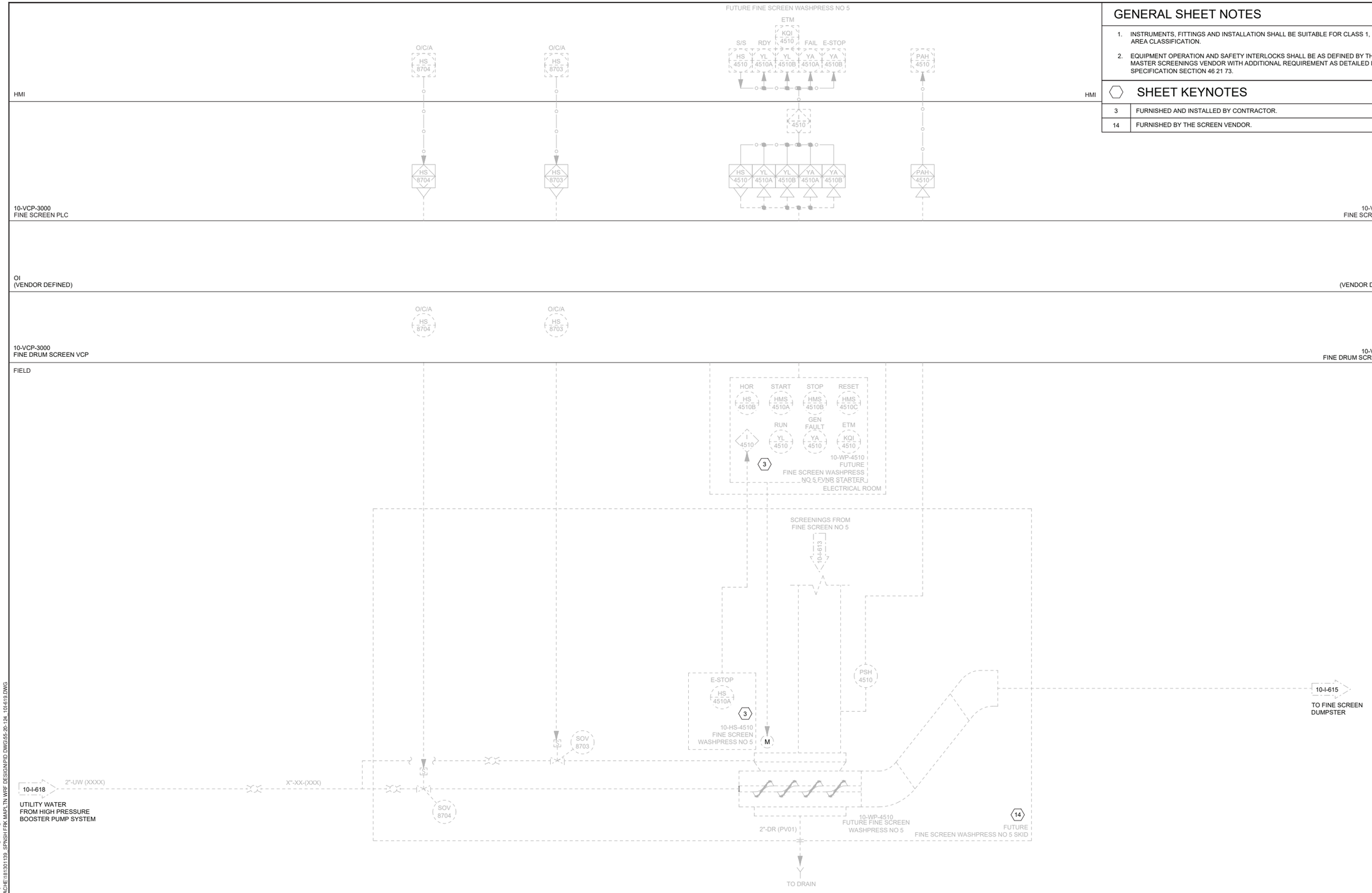


## GENERAL SHEET NOTES

1. INSTRUMENTS, FITTINGS AND INSTALLATION SHALL BE SUITABLE FOR CLASS 1, DIV 1 AREA CLASSIFICATION.
2. EQUIPMENT OPERATION AND SAFETY INTERLOCKS SHALL BE AS DEFINED BY THE MASTER SCREENINGS VENDOR WITH ADDITIONAL REQUIREMENT AS DETAILED IN SPECIFICATION SECTION 46 21 73.

## SHEET KEYNOTES

| | |
|---|---|
| 3 | FURNISHED AND INSTALLED BY CONTRACTOR. |
| 14 | FURNISHED BY THE SCREEN VENDOR. |


J-U-B ENGINEERS, INC.

J-U-B ENGINEERS, INC.
392 E. Winchester St., Suite 300
Salt Lake City, UT 84107
Phone: 801.547.0393
www.jub.com

Subconsultant:

Stantec

Stantec
2890 E Cottonwood Pkwy
Suite 300, Salt Lake City, Ut
84121
Tel: +1.801.617.3200
www.stantec.com


AGENCY

REVIEW


REUSE OF DRAWINGS
J-U-B SHALL RETAIN ALL COMMON LAW, STATUTORY, COPYRIGHT AND OTHER RESERVED RIGHTS OF THESE DRAWINGS, AND THE SAME SHALL NOT BE REUSED WITHOUT J-U-B'S PRIOR WRITTEN CONSENT. ANY REUSE WITHOUT WRITTEN CONSENT BY J-U-B WILL BE AT CLIENTS SOLE RISK AND WITHOUT LIABILITY OR LEGAL EXPOSURE TO J-U-B.


| NO. | DESCRIPTION | BY | APR. | DATE |
|---|---|---|---|---|
| | REVISION | | | |

# SPANISH FORK & MAPELTON WRF
# SPANISH FORK CITY CORPORATION

INSTRUMENTATION AND CONTROL
FINE DRUM SCREENINGS WASH PRESS - V P&ID

FILE : 55-20-124_10I-619
JUB PROJ. # : 55-20-124
DRAWN BY: ARB
DESIGN BY: BH
CHECKED BY: SR

ONE INCH
AT FULL SIZE, IF NOT ONE INCH, SCALE ACCORDINGLY

LAST UPDATED: 6/30/2022

DRAWING:
10-I-619

SHEET: 521 OF 691


Plot Date:6/30/2022 8:06 PM Plotted By: Pinnaduwa-Hewage, Ranga
Date Created:8/30/2021 C:\PLANTCACHE\181301139_SPNSH FRK MAPLTN WRF DESIGN\PID DWG\55-20-124_10I-619.DWG

FINE SCREEN WASHPRESS NO 6

HMI

O/C/A HS 8804

O/C/A HS 8803

ETM KQI 4610

S/S HS 4610 | RDY YL 4610A | YL 4610B | FAIL YA 4610A | E-STOP YA 4610B

I 4610

PAH 4610

HMI

10-VCP-3000
FINE SCREEN PLC

10-VCP-3000
FINE SCREEN PLC

OI
(VENDOR DEFINED)

OI
(VENDOR DEFINED)

10-VCP-3000
FINE DRUM SCREEN VCP

10-VCP-3000
FINE DRUM SCREEN VCP

FIELD

FIELD

HOR HS 4610B | START HMS 4610A | STOP HMS 4610B | RESET HMS 4610C

I 4610 | RUN YL 4610 | GEN FAULT YA 4610 | ETM KQI 4610

3

10-WP-4610
FINE SCREEN WASHPRESS
NO 6 FVNR STARTER

ELECTRICAL ROOM

SCREENINGS FROM
FINE SCREEN NO 6

10-I-614

E-STOP
HS 4610A
3
10-HS-4610
FINE SCREEN
WASHPRESS NO 6

PSH 4610

SOV 8803

SOV 8804

10-I-618
UTILITY WATER
FROM HIGH PRESSURE
BOOSTER PUMP SYSTEM

2"-UW (PV01)

2"-UW (PV01)

2"-DR (PV01)

10-WP-4610
FINE SCREEN
WASHPRESS NO 6

14
FINE SCREEN WASHPRESS NO 6 SKID

10-I-615
TO FINE SCREEN
DUMPSTER

TO DRAIN

## GENERAL SHEET NOTES

1. INSTRUMENTS, FITTINGS AND INSTALLATION SHALL BE SUITABLE FOR CLASS 1, DIV 1 AREA CLASSIFICATION.
2. EQUIPMENT OPERATION AND SAFETY INTERLOCKS SHALL BE AS DEFINED BY THE MASTER SCREENINGS VENDOR WITH ADDITIONAL REQUIREMENT AS DETAILED IN SPECIFICATION SECTION 46 21 73.

## SHEET KEYNOTES

| | |
|---|---|
| 3 | FURNISHED AND INSTALLED BY CONTRACTOR. |
| 14 | FURNISHED BY THE SCREEN VENDOR. |


J-U-B ENGINEERS, INC.

J-U-B ENGINEERS, INC.
392 E. Winchester St., Suite 300
Salt Lake City, UT 84107
Phone: 801.547.0393
www.jub.com

Subconsultant:

Stantec

Stantec
2890 E Cottonwood Pkwy
Suite 300, Salt Lake City, Ut
84121
Tel: +1.801.617.3200
www.stantec.com


AGENCY

REVIEW


REUSE OF DRAWINGS
J-U-B SHALL RETAIN ALL COMMON LAW, STATUTORY, COPYRIGHT AND OTHER RESERVED RIGHTS OF THESE DRAWINGS, AND THE SAME SHALL NOT BE REUSED WITHOUT J-U-B'S PRIOR WRITTEN CONSENT. ANY REUSE WITHOUT WRITTEN CONSENT BY J-U-B WILL BE AT CLIENTS SOLE RISK AND WITHOUT LIABILITY OR LEGAL EXPOSURE TO J-U-B.


| NO. | DESCRIPTION | BY | APP. | DATE |
|---|---|---|---|---|
| | REVISION | | | |

SPANISH FORK & MAPELTON WRF
SPANISH FORK CITY CORPORATION

INSTRUMENTATION AND CONTROL
FINE DRUM SCREENINGS WASH PRESS - VI P&ID

FILE : 55-20-124_10I-620
JUB PROJ. # : 55-20-124
DRAWN BY: ARB
DESIGN BY: BH
CHECKED BY: SR
ONE INCH
AT FULL SIZE, IF NOT ONE INCH, SCALE ACCORDINGLY
LAST UPDATED: 6/30/2022

DRAWING:
10-I-620

SHEET: 522 OF 691


Plot Date:6/30/2022 8:06 PM Plotted By: Pinnadwa-Hawaga, Ranga
Date Created:8/30/2021 C:\PLANTCAD-HE\181301\39_SPNSH FRK MAPLTN WRF DESIGN\PID DWG\55-20-124_10I-620.DWG

## SHEET KEYNOTES

| | |
|---|---|
| 15 | FURNISHED AND INSTALLED SUNSHIELD. |
| 16 | PANEL MOUNTED INSTRUMENTS, I/O AND OPERATOR INTERFACE SCREEN ELEMENTS SHALL BE AS DEFINED IN SPEC SECTION 13271. |
| 17 | NEMA 4X UV-RESISTANT PVC ENCLOSURE WITH SUNSHIELD 1/16" WEEP HOLE AND CROUSE HINDS SSTC-1 DRAIN PLUG. |

ODOR CONTROL FAN

ETM KQI 5105 — S/S HS 5105 | RDY YL 5105A | SPD CTRL SK 5105 | SPD IND SI 5105 | FAIL YL 5105B | E-STOP YA 5105A | AMPS YA 5105B | DISCH II 5105 | PAH 5105

AI 5101 — HMI — AIT 5101 — LSA — 10-PLC-5000

I 5105 — HS 5105A | YL 5105A | SK 5105 | SI 5105 | YL 5105B | YA 5105A | YA 5105B | II 5105 | PAH 5105

PI 5106 — HMI — PIT 5106 — LSA — 16 10-PLC-5000

16 OI — 16 OI

16 10-VCP-5000 ODOR CONTROL VCP — 16 10-VCP-5000 ODOR CONTROL VCP

FIELD — FIELD

VFD CP — 10-VFD-5105 ODOR CONTROL FAN VFD

HOR HS 5105 | OFF YL 5105A | RUN YL 5105B | PAH 5105 | DRIVE TRIP CIRCUIT I 5105 | VFD FAULT YA 5105C

START HMS 5105A | STOP HMS 5105B | RUN YL 5105 | AMPS II 5105 | SPD SI 5105 | PAH 5105 | SPD CTRL SC 5105 | VFD RESET HMS 5105C | VFD AVAIL YL 5105 | E-STOP YA 5105A | GEN FAULT YA 5105B — OI

ELECTRICAL ROOM — ELECTRICAL ROOM

10-I-603 18"-FA (FR01) FROM COARSE SCREEN NO 3

10-I-605 8"-FA (FR01) FROM COARSE SCREENING/GRIT LODOR

10-I-607 8"-FA (FR01) FROM COARSE SCREENING AND GRIT DUMPSTER

18"x24" — 18"-FA (FR01)

10-I-615 8"-FA (FR01) FROM FINE SCREEN LODOR

10-I-612 14"-FA (FR01) FROM FINE SCREEN ODOR CONTROL HEADER NO 2

10-I-609 14"-FA (FR01) FROM FINE SCREEN ODOR CONTROL HEADER NO 1

15 — 120VAC — YS 5101 — AIT 5101 — AE 5101 — LSA — 17 H2S GAS LEVEL DETECTION

24"-FA (FR01)

PDI 5102 — PI 5104 — 10-ME-5102 MIST/GREASE ELIMINATOR — 2"-DR (PV01)

10-VF-5103A

PDI 5105 — M — 10-EXF-5105 ODOR CONTROL FAN — 2"-DR (PV01)

PI 5102B — 10-VF-5103B — 24"-FA (FR01)

LSA PIT 5106

TO ATMOSPHERE — TO ATMOSPHERE

1/2"-FA (SAMPLE) — 1/2"-FA (SAMPLE) — 1/2"-FA (SAMPLE)

MEDIA BED — MEDIA BED

CARBON BED SAMPLE PORTS — CARBON BED SAMPLE PORTS

PDI 5110A — PDI 5110B

2"-DR (PV01)

4"-DR (PV01) — TO PLANT DRAIN

ODOR CONTROL VENDOR LIMITS


J-U-B ENGINEERS, INC.

J-U-B ENGINEERS, INC.
392 E. Winchester St., Suite 300
Salt Lake City, UT 84107
Phone: 801.547.0393
www.jub.com

Subconsultant:

Stantec
Stantec
2890 E Cottonwood Pkwy
Suite 300, Salt Lake City, Ut
84121
Tel: +1.801.617.3200
www.stantec.com


AGENCY

REVIEW


REUSE OF DRAWINGS
J-U-B SHALL RETAIN ALL COMMON LAW, STATUTORY, COPYRIGHT AND OTHER RESERVED RIGHTS OF THESE DRAWINGS, AND THE SAME SHALL NOT BE REUSED WITHOUT J-U-B'S PRIOR WRITTEN CONSENT. ANY REUSE WITHOUT WRITTEN CONSENT BY J-U-B WILL BE AT CLIENTS SOLE RISK AND WITHOUT LIABILITY OR LEGAL EXPOSURE TO J-U-B.


| NO. | DESCRIPTION | BY | APP'L | DATE |
|---|---|---|---|---|
| | REVISION | | | |

SPANISH FORK & MAPELTON WRF
SPANISH FORK CITY CORPORATION

INSTRUMENTATION AND CONTROL
HEADWORKS ODOR CONTROL P&ID

FILE : 55-20-124_10I-621
JUB PROJ. # : 55-20-124
DRAWN BY: ARB
DESIGN BY: BH
CHECKED BY: SR
ONE INCH
AT FULL SIZE, IF NOT ONE INCH, SCALE ACCORDINGLY
LAST UPDATED: 7/6/2022

DRAWING:
10-I-621

SHEET: 523 OF 691


Plot Date:7/6/2022 1:05 PM Plotted By: Pinnadawa-Hewage, Ranga
Date Created:5/26/2021 C:\PLANTCACHE\181301139_SPNSH FRK MAPLTN WRF DESIGN\PID DWG\55-20-124_10I-621.DWG

HW BOOSTER PUMP NO 1

HW BOOSTER PUMP NO 2

HW BOOSTER PUMP NO 3

HW BOOSTER PUMP NO 4

HMI

HEADWORKS PLC

FIELD

OI

10-VCP-8000
VENDOR CONTROL PANEL

10-P-8105
HIGH PRESSURE UTILITY
WATER PUMP NO 1

10-P-8205
HIGH PRESSURE UTILITY
WATER PUMP NO 2

10-P-8305
HIGH PRESSURE UTILITY
WATER PUMP NO 3

10-P-8405
HIGH PRESSURE UTILITY
WATER PUMP NO 4
(FUTURE)

HIGH PRESSURE UTILITY WATER PUMP SKID

55-I-601
UTILITY WATER

6"-UW (DI01

10-VF-8001

10-VF-8002

10-VF-8003

6"-UW (XXXX)

4"-UW (DI01)

3"-UW-(SS01)

3"x6"

10-VF-8105

10-VB-8120

10-VB-8220

10-VF-8320

10-VF-8420

2"-UW (PV01)
10-I-615
HIGH PRESSURE
UTILITY WATER
TO FINE SCREEN
WASHPRESS NO 1

2"-UW (PV01
10-I-618
HIGH PRESSURE
UTILITY WATER
TO FINE SCREEN
WASHPRESS NO 4

3"-UW (PV01
10-I-607
HIGH PRESSURE
UTILITY WATER
TO GRIT WASHERS

6"-UW (DI02)
10-I-609
HIGH PRESSURE
UTILITY WATER
TO FINE SCREENS

TO GRIT PUMPS
2"-UW (PV01)
10-I-606

TO COARSE SCREENING
WASHPRESS AND SLUICE
10-I-604

**REUSE OF DRAWINGS**
J-U-B SHALL RETAIN ALL COMMON LAW STATUTORY, COPYRIGHT AND OTHER RESERVED RIGHTS OF THESE DRAWINGS, AND THE SAME SHALL NOT BE REUSED WITHOUT J-U-B'S PRIOR WRITTEN CONSENT. ANY REUSE WITHOUT WRITTEN CONSENT BY J-U-B WILL BE AT CLIENTS SOLE RISK AND WITHOUT LIABILITY OR LEGAL EXPOSURE TO J-U-B.

| NO. | DESCRIPTION | BY | APP'L | DATE |
|---|---|---|---|---|
| | REVISION | | | |

J-U-B ENGINEERS, INC.
J-U-B ENGINEERS, INC.
392 E. Winchester St., Suite 300
Salt Lake City, UT 84107
Phone: 801.547.0393
www.jub.com

Subconsultant:
Stantec
Stantec
2890 E Cottonwood Pkwy
Suite 300, Salt Lake City, Ut
84121
Tel: +1.801.617.3200
www.stantec.com

AGENCY

REVIEW

SPANISH FORK & MAPELTON WRF
SPANISH FORK CITY CORPORATION

INSTRUMENTATION AND CONTROL
HEADWORKS BOOSTER PUMP SKID - P&ID

FILE : 55-20-124_10I-622
JUB PROJ. # : 55-20-124
DRAWN BY: ARB
DESIGN BY: BH
CHECKED BY: SR
ONE INCH
AT FULL SIZE, IF NOT ONE
INCH, SCALE ACCORDINGLY
LAST UPDATED: 6/30/2022

DRAWING:
10-I-622

SHEET: 524 OF 691

Plot Date:6/30/2022 8:06 PM Plotted By: Pinnduwa-Hewage, Ranga
Date Created:8/12/2021 C:\PLANTCAD\HE1181301139_SPNSH FRK MAPLTN WRF DESIGN\PID DWG\55-20-124_10I-622.DWG

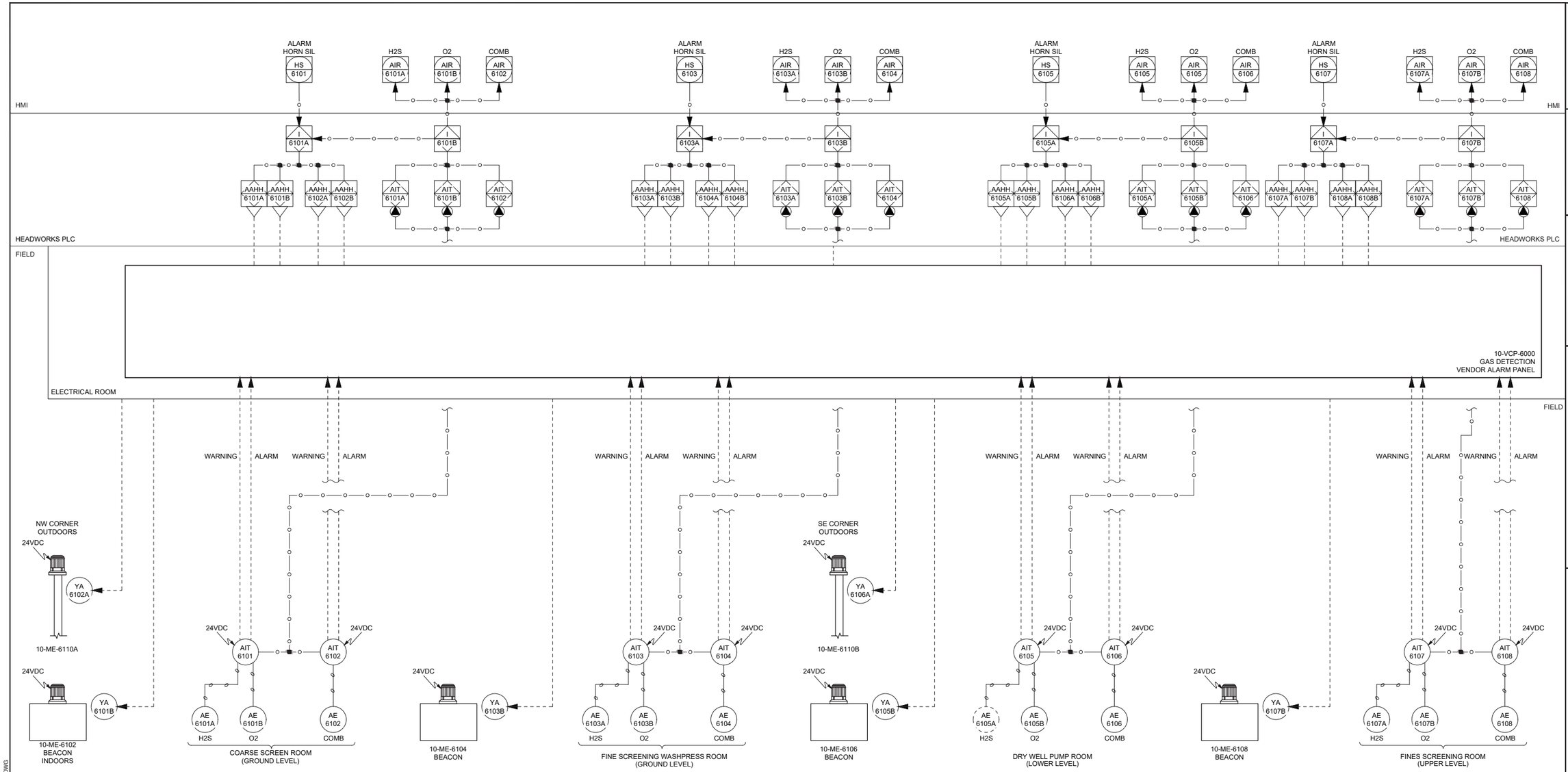



J-U-B ENGINEERS, INC.

J-U-B ENGINEERS, INC.
392 E. Winchester St., Suite 300
Salt Lake City, UT 84107
Phone: 801.547.0393
www.jub.com

Subconsultant:

Stantec
Stantec
2890 E Cottonwood Pkwy
Suite 300, Salt Lake City, Ut
84121
Tel: +1.801.617.3200
www.stantec.com


AGENCY

REVIEW


REUSE OF DRAWINGS
J-U-B SHALL RETAIN ALL COMMON LAW, STATUTORY, COPYRIGHT AND OTHER RESERVED RIGHTS OF THESE DRAWINGS, AND THE SAME SHALL NOT BE REUSED WITHOUT J-U-B'S PRIOR WRITTEN CONSENT. ANY REUSE WITHOUT WRITTEN CONSENT BY J-U-B WILL BE AT CLIENTS SOLE RISK AND WITHOUT LIABILITY OR LEGAL EXPOSURE TO J-U-B.


| NO. | DESCRIPTION | BY | APP. | DATE |
|---|---|---|---|---|
| | REVISION | | | |

# SPANISH FORK & MAPELTON WRF
# SPANISH FORK CITY CORPORATION

## INSTRUMENTATION AND CONTROL
## HEADWORKS GAS DETECTION P&ID

FILE : 55-20-124_10I-623
JUB PROJ. # : 55-20-124
DRAWN BY: VBK
DESIGN BY: BH
CHECKED BY: SR

ONE INCH
AT FULL SIZE, IF NOT ONE INCH, SCALE ACCORDINGLY

LAST UPDATED: 6/30/2022

DRAWING:
10-I-623

SHEET: 525 OF 691


Plot Date:6/30/2022 8:07 PM Plotted By: Pinnadwa+Hawaje, Ranga
Date Created:5/26/2021 C:\PLANTCAD\HE1181301139_SPNSH FRK MAPLTN WRF DESIGN\PID DWG\55-20-124 _10I-623.DWG

HMI

HMI

BNR/MBR PLC

BNR/MBR PLC

FIELD

FIELD

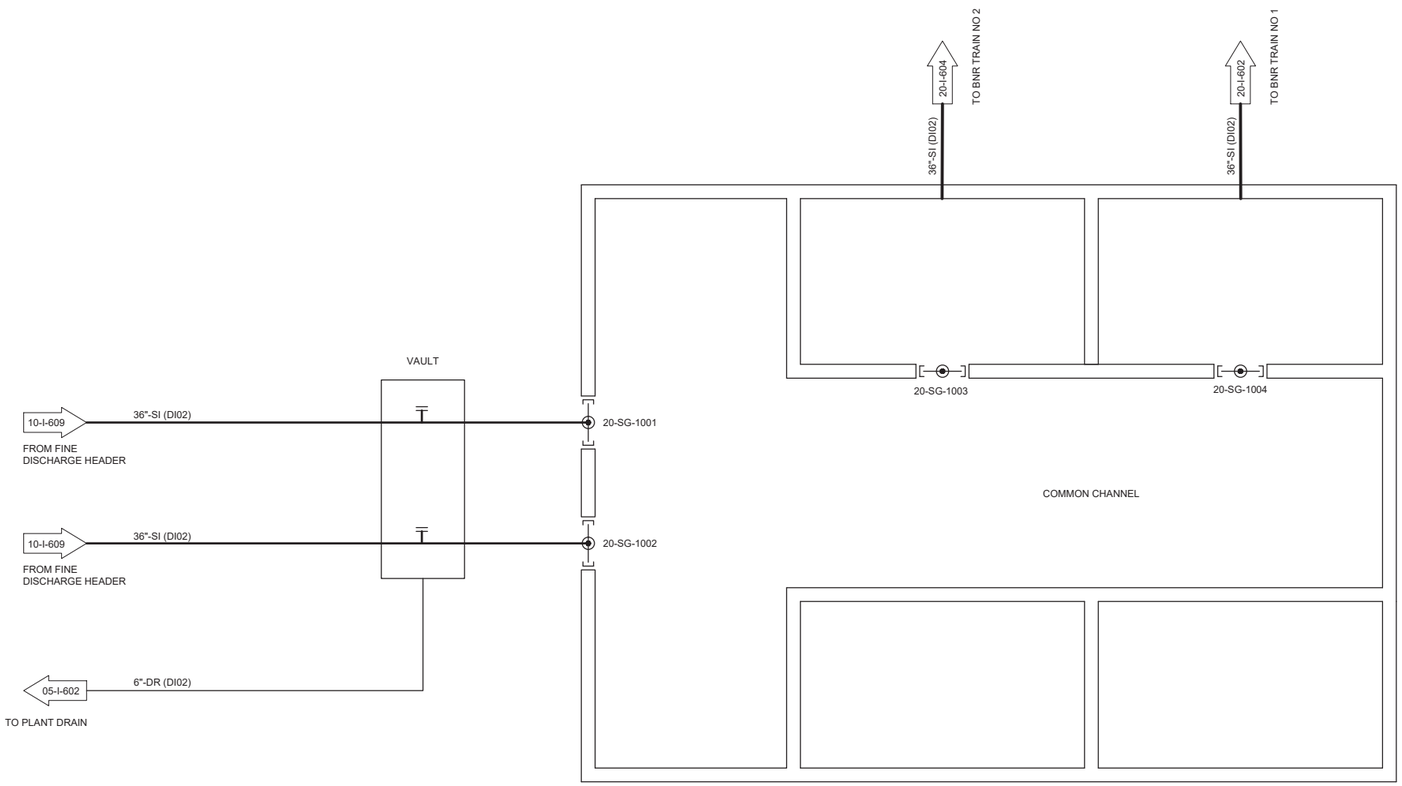


Plot Date:6/30/2022 8:07 PM Plotted By: Pinnaduwe-Hewage, Ranga
Date Created:5/26/2021 C:\PLANTCACHE\181301139_SPNSH FRK MAPLTN WRF DESIGN\PID DWG\55-20-124_20I-601.DWG

J-U-B ENGINEERS, INC.

J-U-B ENGINEERS, INC.
392. E. Winchester St., Suite 300
Salt Lake City, UT 84107
Phone: 801.547.0393
www.jub.com

Subconsultant:

Stantec

Stantec
2890 E Cottonwood Pkwy
Suite 300, Salt Lake City, Ut
84121
Tel: +1.801.617.3200
www.stantec.com

AGENCY

REVIEW

REUSE OF DRAWINGS
J-U-B SHALL RETAIN ALL COMMON LAW, STATUTORY, COPYRIGHT AND OTHER RESERVED RIGHTS OF THESE DRAWINGS, AND THE SAME SHALL NOT BE REUSED WITHOUT J-U-B'S PRIOR WRITTEN CONSENT. ANY REUSE WITHOUT WRITTEN CONSENT BY J-U-B WILL BE AT CLIENTS SOLE RISK AND WITHOUT LIABILITY OR LEGAL EXPOSURE TO J-U-B.

| NO. | DESCRIPTION | BY | APP. | DATE |
|---|---|---|---|---|
| REVISION | | | | |

SPANISH FORK & MAPELTON WRF
SPANISH FORK CITY CORPORATION

INSTRUMENTATION AND CONTROL
BNR SPLITTER BOX P&ID

FILE : 55-20-124_20I-601
JUB PROJ. # : 55-20-124
DRAWN BY: VBK
DESIGN BY: BH
CHECKED BY: SR

ONE INCH
AT FULL SIZE, IF NOT ONE INCH, SCALE ACCORDINGLY

LAST UPDATED: 6/30/2022

DRAWING:
20-I-601

SHEET: 526 OF 691

ANAEROBIC MIXER NO 1 | ANAEROBIC MIXER NO 2 | ANOXIC MIXER NO 1 | ANOXIC MIXER NO 2 | MLR PUMP NO 1 | MLR PUMP NO 2

HMI

BNR/MBR PLC

ANAEROBIC MIXER NO 1 STARTER (20-MX-1110)
ANAEROBIC MIXER NO 2 STARTER (20-MX-1112)
ANOXIC MIXER NO 1 STARTER (20-MX-1114)
ANOXIC MIXER NO 2 STARTER (20-MX-1116)
20-VFD-2105 MLR PUMP NO 1 VFD
20-VFD-2205 MLR PUMP NO 2 VFD

ELECTRICAL ROOM

FIELD

20-LCS-1110 ANAEROBIC MIXER NO 1 LCS
20-LCS-1112 ANAEROBIC MIXER NO 2 LCS
20-LCS-1114 ANOXIC MIXER NO 1 LCS
20-LCS-1116 ANOXIC MIXER NO 2 LCS
20-LCS-2105 MLR PUMP NO 1 LCS
20-LCS-2205 MLR PUMP NO 2 LCS

24"-RAS (DI02) — 35-I-609 — FROM MBR SYSTEM RAS PUMPS DISCHARGE

18"-PDR (PV05) — 20-I-603 — CONTINUED FROM BNR TRAIN NO 1

05-I-602 — TO PLANT DRAIN

18"-PDR (PV05)

6"-DR (DI02) — 20-VM-1110

6"-DR (DI02) — 20-VM-1112

6"-DR (DI02) — 20-VM-1114

6"-DR (DI02) — 20-VM-1116

16"-MLR (DI02)

FIT 2111 — 120VAC

FE 2111

FSL 2107

PI 2107

20-VP-2106 — 20-VC-2105

20-VP-2206 — 20-VC-2205

20-VP-2112

20-VP-2114

20-VP-2115

FROM UTILITY WATER

20-I-603(A) — BNR TRAIN NO 1 CONTINUED

20-I-604 — TO BNR TRAIN NO 2

TSH 1110 M — 20-MX-1110 ANAEROBIC MIXER NO 1 — ANAEROBIC ZONE 1

TSH 1112 M — AIT 1113 — YS 1113 — ORP AE 1113 — 120VAC — 20-MX-1112 ANAEROBIC MIXER NO 2 — ANAEROBIC ZONE 2

TSH 1114 M — 20-MX-1114 ANOXIC MIXER NO 1 — ANOXIC ZONE 1

TSH 1116 M — 20-MX-1116 ANOXIC MIXER NO 2

TSH 2105 M — XS 2105 — LEAK — 20-P-2105 MLR PUMP NO 1 — ANOXIC ZONE 2

TSH 2205 M — XS 2205 — LEAK — AIT 1117 — YS 1117 — ORP AE 1117 — 120VAC — 20-P-2205 MLR PUMP NO 2

20-I-601 — FROM BNR SPLITTER BOX

36"-SI (DI02)

20-I-604 — CONTINUED TO BNR TRAIN NO 2

## SHEET KEYNOTES

1. LCS FIELD LOCATED NEXT TO EQUIPMENT.


J-U-B ENGINEERS, INC.
J-U-B ENGINEERS, INC.
392 E. Winchester St., Suite 300
Salt Lake City, UT 84107
Phone: 801.547.0393
www.jub.com

Subconsultant:
Stantec
Stantec
2890 E Cottonwood Pkwy
Suite 300, Salt Lake City, Ut
84121
Tel: +1.801.617.3200
www.stantec.com


AGENCY

REVIEW


REUSE OF DRAWINGS
J-U-B SHALL RETAIN ALL COMMON LAW, STATUTORY, COPYRIGHT AND OTHER RESERVED RIGHTS OF THESE DRAWINGS, AND THE SAME SHALL NOT BE REUSED WITHOUT J-U-B'S PRIOR WRITTEN CONSENT. ANY REUSE WITHOUT WRITTEN CONSENT BY J-U-B WILL BE AT CLIENTS SOLE RISK AND WITHOUT LIABILITY OR LEGAL EXPOSURE TO J-U-B.


| NO. | DESCRIPTION | DATE | BY | APR. |
|---|---|---|---|---|
| | REVISION | | | |

SPANISH FORK & MAPELTON WRF
SPANISH FORK CITY CORPORATION

INSTRUMENTATION AND CONTROL
BIOLOGICAL NUTRIENT REACTION TRAIN NO 1 - I P&ID

FILE : 55-20-124_20I-602
JUB PROJ. # : 55-20-124
DRAWN BY: VBK
DESIGN BY: BH
CHECKED BY: SR
ONE INCH
AT FULL SIZE, IF NOT ONE INCH, SCALE ACCORDINGLY
LAST UPDATED: 6/30/2022

DRAWING:
20-I-602

SHEET: 527 OF 691


Plot Date:5/30/2022 8:07 PM, Plotted By: Pimradsuwa-Hewage, Ranga
Date Created:5/26/2021 C:\PLANTCAD\CHE1813\0139_SPNSH FRK MAPLTN WRF DESIGN\PID DWG\55-20-124_20I-602.DWG

## SHEET KEYNOTES

| | |
|---|---|
| 2 | FURNISH AND INSTALL SUN SHIELD. REMOTE MOUNT TRANSMITTER. |
| 3 | FURNISHED BY AERATION BLOWER VENDOR BY SUBCONTRACTOR. |

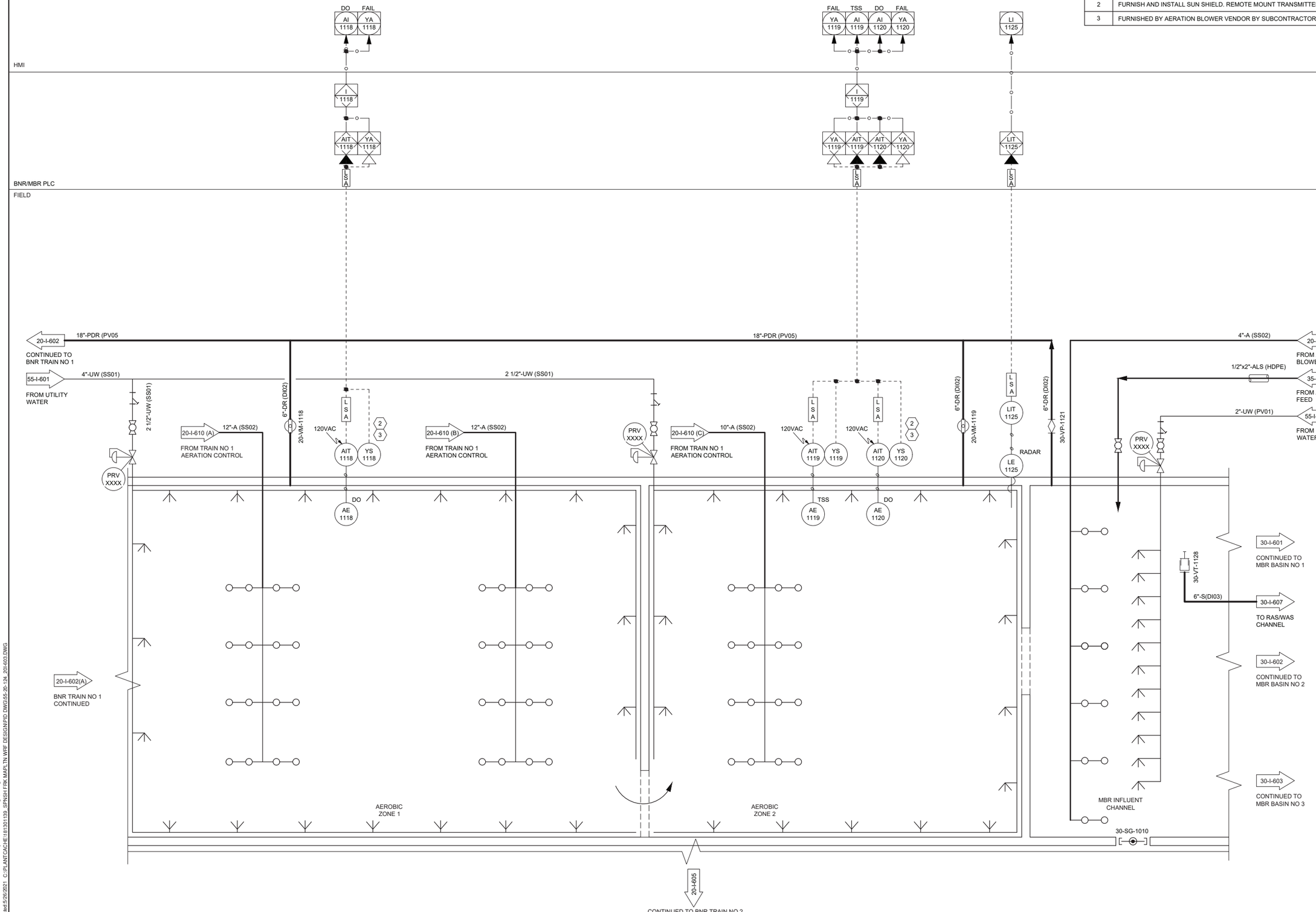



J-U-B ENGINEERS, INC.

J-U-B ENGINEERS, INC.
392. E. Winchester St., Suite 300
Salt Lake City, UT 84107
Phone: 801.547.0393
www.jub.com

Subconsultant:

Stantec
Stantec
2890 E Cottonwood Pkwy
Suite 300, Salt Lake City, Ut
84121
Tel: +1.801.617.3200
www.stantec.com


AGENCY

REVIEW


REUSE OF DRAWINGS
J-U-B SHALL RETAIN ALL COMMON LAW, STATUTORY, COPYRIGHT AND OTHER RESERVED RIGHTS OF THESE DRAWINGS, AND THE SAME SHALL NOT BE REUSED WITHOUT J-U-B'S PRIOR WRITTEN CONSENT. ANY REUSE WITHOUT WRITTEN CONSENT BY J-U-B WILL BE AT CLIENTS SOLE RISK AND WITHOUT LIABILITY OR LEGAL EXPOSURE TO J-U-B.


| NO. | DESCRIPTION | BY | APR. | DATE |
|---|---|---|---|---|
| | REVISION | | | |

SPANISH FORK & MAPELTON WRF
SPANISH FORK CITY CORPORATION

INSTRUMENTATION AND CONTROL
BIOLOGICAL NUTRIENT REACTION TRAIN NO 1 - II P&ID

| | |
|---|---|
| FILE : | 55-20-124_20I-603 |
| JUB PROJ. # : | 55-20-124 |
| DRAWN BY: | VBK |
| DESIGN BY: | BH |
| CHECKED BY: | SR |

ONE INCH
AT FULL SIZE, IF NOT ONE INCH, SCALE ACCORDINGLY

LAST UPDATED: 6/30/2022

DRAWING:
20-I-603

SHEET: 528 OF 691


Plot Date:6/30/2022 8:07 PM Plotted By: Pinnaduwa-Hewage, Ranga
Date Created:5/28/2021 C:\PLANT\CAD\HE1813011339_SPNSH FRK MAPLTN WRF DESIGN\PID DWG\55-20-124_20I-603.DWG

ANAEROBIC MIXER NO 3
ANAEROBIC MIXER NO 4
ANOXIC MIXER NO 3
ANOXIC MIXER NO 4
MLR PUMP NO 3
MLR PUMP NO 4
HMI
BNR/ MBR PLC
ELECTRICAL ROOM
FIELD
20-MX-1210 ANAEROBIC MIXER NO 3 STARTER
20-MX-1212 ANAEROBIC MIXER NO 4 STARTER
20-MX-1214 ANOXIC MIXER NO 3 STARTER
20-MX-1216 ANOXIC MIXER NO 4 STARTER
20-VFD-2305 MLR PUMP NO 3 VFD
20-VFD-2405 MLR PUMP NO 4 VFD
20-LCS-1210 ANAEROBIC MIXER NO 3 LCS
20-LCS-1212 ANAEROBIC MIXER NO 4 LCS
20-LCS-1214 ANOXIC MIXER NO 3 LCS
20-LCS-1216 ANOXIC MIXER NO 4 LCS
20-LCS-2305 MLR PUMP NO 3 LCS
20-LCS-2405 MLR PUMP NO 4 LCS
TO BNR TRAIN NO 1
20-I-602
CONTINUED FROM BNR TRAIN NO 1 SHEET 20-I-602
20-MX-1210 ANAEROBIC MIXER NO 3
20-MX-1212 ANAEROBIC MIXER NO 4
20-MX-1214 ANOXIC MIXER NO 3
20-MX-1216 ANOXIC MIXER NO 4
ANAEROBIC ZONE 1
ANAEROBIC ZONE 2
ANOXIC ZONE 1
ANOXIC ZONE 2
20-P-2305 MLR PUMP NO 3
20-P-2405 MLR PUMP NO 4
20-VP-2314
20-VP-2312
FROM BNR SPLITTER BOX
20-I-601
36"-SI (DI02)
CONTINUED FROM BNR SPLITTER BOX 20-I-601
35-I-609
FROM MBR SYSTEM RAS PUMPS DISCHARGE
24"-RAS (DI02)
6"-DR (DI02)
20-VM-1210
20-VM-1212
20-VM-1214
20-VM-1216
16"-MLR (DI02)
18"-PDR (PV05)
05-I-602
TO PLANT DRAIN
20-VC-2305
20-VP-2306
20-VC-2405
20-VP-2406
20-I-605(A)
BNR TRAIN NO 2 CONTINUED
20-I-605(B)
CONTINUED FROM BNR TRAIN NO 2
BNR TRAIN NO 2 AEROBIC ZONES

## SHEET KEYNOTES

1. LCS FIELD LOCATED NEXT TO EQUIPMENT.


J-U-B ENGINEERS, INC.
J-U-B ENGINEERS, INC.
392 E. Winchester St., Suite 300
Salt Lake City, UT 84107
Phone: 801.547.0393
www.jub.com

Subconsultant:
Stantec
Stantec
2890 E Cottonwood Pkwy
Suite 300, Salt Lake City, Ut
84121
Tel: +1.801.617.3200
www.stantec.com


AGENCY

REVIEW


REUSE OF DRAWINGS
J-U-B SHALL RETAIN ALL COMMON LAW, STATUTORY, COPYRIGHT AND OTHER RESERVED RIGHTS OF THESE DRAWINGS, AND THE SAME SHALL NOT BE REUSED WITHOUT J-U-B'S PRIOR WRITTEN CONSENT. ANY REUSE WITHOUT WRITTEN CONSENT BY J-U-B WILL BE AT CLIENTS SOLE RISK AND WITHOUT LIABILITY OR LEGAL EXPOSURE TO J-U-B.


| NO. | DESCRIPTION | BY | APR. | DATE |
|---|---|---|---|---|
| | REVISION | | | |

SPANISH FORK & MAPELTON WRF
SPANISH FORK CITY CORPORATION

INSTRUMENTATION AND CONTROL
BIOLOGICAL REACTION TRAIN NO 2 - I P&ID

| | |
|---|---|
| FILE : | 55-20-124_20I-604 |
| JUB PROJ. # : | 55-20-124 |
| DRAWN BY: | VBK |
| DESIGN BY: | BH |
| CHECKED BY: | SR |

ONE INCH
AT FULL SIZE, IF NOT ONE INCH, SCALE ACCORDINGLY

LAST UPDATED: 6/30/2022

DRAWING:
20-I-604

SHEET: 529 OF 691


Plot Date:5/30/2022 8:07 PM, Plotted By: Pimradswa-Hewage, Ranga
Date Created:8/12/2021 C:\PLANTCAD\HE18130\139_SPNSH FRK MAPLTN WRF DESIGN\PID DWG\55-20-124_20I-604.DWG

## SHEET KEYNOTES

| | |
|---|---|
| 2 | FURNISH AND INSTALL SUN SHIELD. REMOTE MOUNT TRANSMITTER. |
| 3 | FURNISHED BY AERATION BLOWER VENDOR BY SUBCONTRACTOR. |

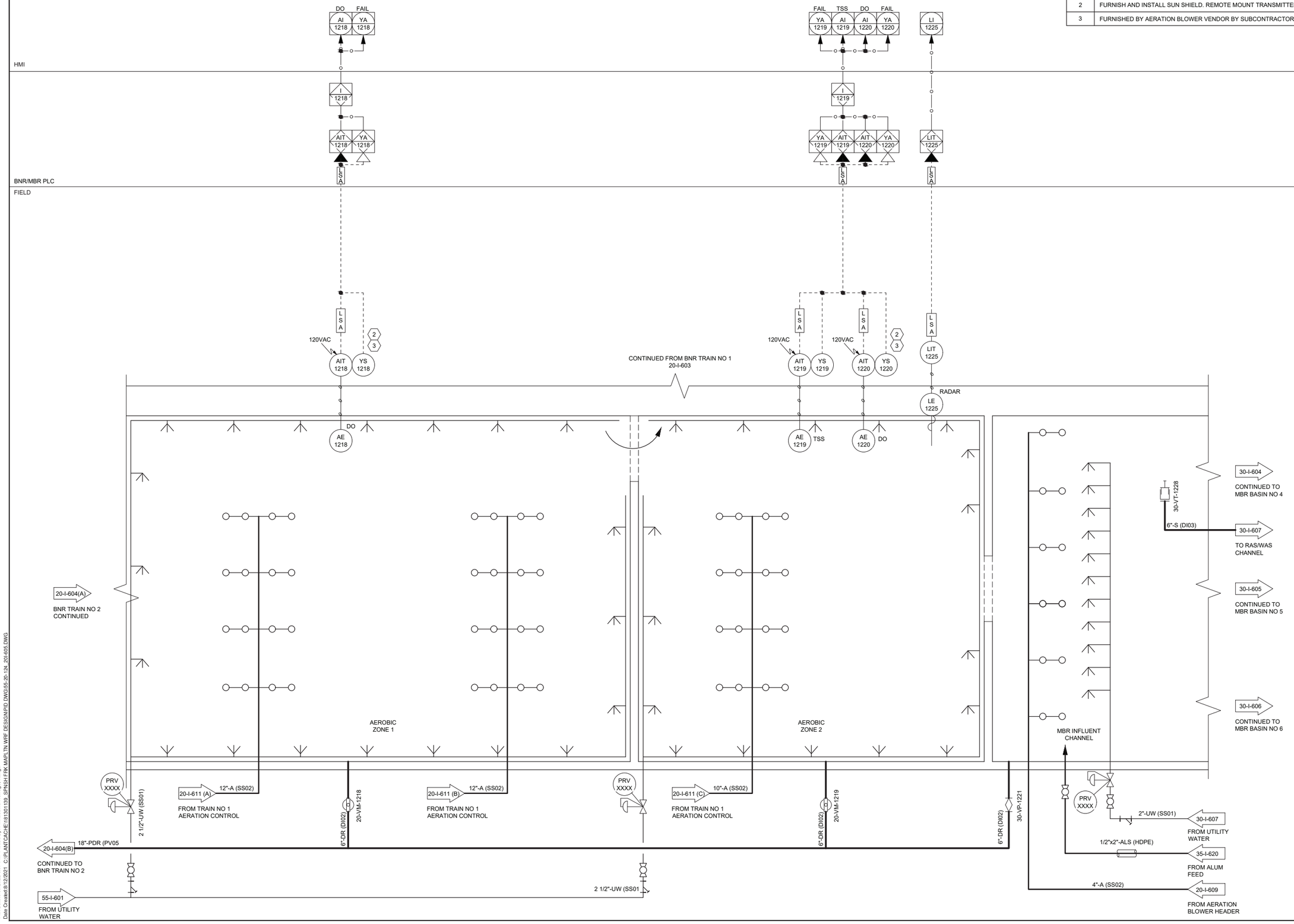



J-U-B ENGINEERS, INC.

J-U-B ENGINEERS, INC.
392. E. Winchester St., Suite 300
Salt Lake City, UT 84107
Phone: 801.547.0393
www.jub.com

Subconsultant:

Stantec

Stantec
2890 E Cottonwood Pkwy
Suite 300, Salt Lake City, Ut
84121
Tel: +1.801.617.3200
www.stantec.com


AGENCY

REVIEW


REUSE OF DRAWINGS:
J-U-B SHALL RETAIN ALL COMMON LAW, STATUTORY, COPYRIGHT AND OTHER RESERVED RIGHTS OF THESE DRAWINGS, AND THE SAME SHALL NOT BE REUSED WITHOUT J-U-B'S PRIOR WRITTEN CONSENT. ANY REUSE WITHOUT WRITTEN CONSENT BY J-U-B WILL BE AT CLIENTS SOLE RISK AND WITHOUT LIABILITY OR LEGAL EXPOSURE TO J-U-B.


| NO. | DESCRIPTION | BY | APR. | DATE |
|---|---|---|---|---|
| | REVISION | | | |

SPANISH FORK & MAPELTON WRF
SPANISH FORK CITY CORPORATION

INSTRUMENTATION AND CONTROL
BIOLOGICAL REACTION TRAIN NO 2 - II P&ID

| | |
|---|---|
| FILE : | 55-20-124_20I-605 |
| JUB PROJ. # : | 55-20-124 |
| DRAWN BY: | VBK |
| DESIGN BY: | BH |
| CHECKED BY: | SR |

ONE INCH
AT FULL SIZE, IF NOT ONE INCH, SCALE ACCORDINGLY

LAST UPDATED: 6/30/2022

DRAWING:
20-I-605

SHEET: 530 OF 691


Plot Date:6/30/2022 8:07 PM Plotted By: Pinnaduwa-Hewage, Ranga
Date Created:8/12/2021 C:\PLANTCACHE\18130139_SPNSH FRK MAPLTN WRF DESIGN\PID DWG\55-20-124_20I-605.DWG

AERATION BLOWER NO 1A

AERATION BLOWER NO 1A BLOW OFF SILENCER VALVE

AERATION BLOWER NO 1B BLOW OFF SILENCER VALVE

AERATION BLOWER NO 1B

HMI

ATM PRESS PDI 2102 | HUMI-DITY AI 2103 | INTAKE TEMP TI 2103 | DIFF FLTR PRESS PDI 2101 | DIFF PRESS PDI 2104 | E-STOP YA 2100

SUCT TEMP TI 2110A | WIND TEMP TI 2110B | BEAR ING TEMP TI 2110C | VIBR VI 2110 | DISCH TEMP TI 2110D | DISCH PRESS PI 2110

RUN CMD HS 2110 | REMOTE YL 2110A | SPD CTRL SK 2110 | SPD IND SI 2110 | ETM KQI 2110 YL 2110B | FAIL YA 2110 | AMPS II 2110 | OVER-LOAD IAH 2110 | SURGE IAL 2110

O/C HS 2111

FAL 2111 | FAL 2121

O/C HS 2121

SUCT TEMP TI 2120A | WIND TEMP TI 2120B | BEAR ING TEMP TI 2120C | VIBR VI 2120 | DISCH TEMP TI 2120D | DISCH PRESS PI 2120

RUN CMD HS 2120 | REMOTE YL 2120A | SPD CTRL SK 2120 | SPD IND SI 2120 | ETM KQI 2120 YL 2120B | FAIL YA 2120 | AMPS II 2120 | OVER-LOAD IAH 2120 | SURGE IAL 2120

HMI

20-I-609 (C)
FROM BLOWER MASTER CONTROLLER

I 2110

I 2120

20-VCP-2001
BLOWER MASTER CONTROL PANEL PLC

20-VCP-2001
BLOWER MASTER CONTROL PANEL PLC

I 2110 | I 2111 | I 2121 | I 2120

PI 2102 | AI 2103 | TI 2103 | PDI 2101 | PDI 2104 | YA 2100

TI 2110A | TI 2110B | TI 2110C | VI 2110 | TI 2110D | PI 2110

HS 2110 | YL 2110A | SK 2110 | SI 2110 | YL 2110B | YA 2110 | II 2110 | IAH 2110 | IAL 2110

HS 2111

FSL 2111 | FSL 2121

HS 2121

TI 2120A | TI 2120B | TI 2120C | VI 2120 | TI 2120D | PI 2120

HS 2120 | YL 2120A | SK 2120 | SI 2120 | YL 2120B | YA 2120 | II 2120 | IAH 2120 | IAL 2120

20-VCP-2101
BLOWER NO 1 VCP

20-VCP-2101
BLOWER NO 1 VCP

E-STOP HS 2100

HOR HS 2110A | OFF YL 2110C | RUN YL 2110D

DRIVE TRIP CIRCUIT I 2110 | VFD FAULT YA 2110C

START HMS 2110A | STOP HMS 2110B | RUN YL 2110B | AMPS II 2110 | SPD SI 2110 | OVERLOAD IAH 2110 | TAH 2110

SPD CTRL SC 2110 | VFD RESET HMS 2110C | VFD AVAIL YL 2110A | E-STOP YA 2110B | GEN FAULT YA 2110A | SURGE IAL 2110 | OI VAH 2110

VFD CP

20-VFD-2110
AERATION BLOWER NO 1A VFD

VENDOR DEFINED

OIT | OIT

BLOWER 1A

O/O HS 2111 | RESET HMS 2111 | RUN YL 2111A | STOP YL 2111B

BLOWER 1B

O/O HS 2121 | RESET HMS 2121 | RUN YL 2121A | STOP YL 2121B

HOR HS 2120 | OFF YL 2120C | RUN YL 2120D

DRIVE TRIP CIRCUIT I 2120 | VFD FAULT YA 2120C

START HMS 2120A | STOP HMS 2120B | RUN YL 2120B | AMPS II 2120 | SPD SI 2120 | OVERLOAD IAH 2120 | TAH 2120

SPD CTRL SC 2120 | VFD RESET HMS 2120C | VFD AVAIL YL 2120A | E-STOP YA 2120B | GEN FAULT YA 2120A | SURGE IAL 2120 | OI VAH 2120

VFD CP

20-VFD-2120
AERATION BLOWER NO 1B VFD

20-VCP-2101
BLOWER NO 1 VCP

20-VCP-2101
BLOWER NO 1 VCP

FIELD

FIELD

PIT 2102

AIT 2103

TEMP / HUMIDITY

AE 2103

ATM

PDT 2101

TP 2102

20-FLTR-2101A
PRE-FILTER

FLEXIBLE CONNECTION PROVIDED BY BLOWER VENDOR

20-FLTR-2101B
FILTER

ATM

PDT 2104

SUCTION TE 2110A | MTR TE 2110B | BEAR TE 2110C | VT 2110 | VE 2110 | TE 2110D | PT 2110

20-BLW-2110
AERATION BLOWER NO 1A

SOV 2111 | FSL 2111 | ATM

20-VC-2111

20-ME-2111
BLOW OFF SILENCER NO 1

TP 2103

20-VC-2110

20-VF-2110

14"-A (SS02)

20-I-609 (A)
TO AERATION BLOWERS COMMON HEADER

SUCTION TE 2120A | MTR TE 2120B | BEAR TE 2120C | VT 2120 | VE 2120 | TE 2120D | PT 2120

20-BLW-2120
AERATION BLOWER NO 1B

SOV 2121 | FSL 2121 | ATM

20-VC-2121

20-ME-2121
BLOW OFF SILENCER NO 2

TP 2104

20-VC-2120

20-VF-2120

14"-A (SS02)

20-I-609 (B)
TO AERATION BLOWERS COMMON HEADER

20-BLW-2100
AERATION BLOWER NO 1 SKID
(VENDOR PROVIDED)

## SHEET KEYNOTES

| | |
|---|---|
| 4 | EQUIPMENT PROVIDED AND SHIPPED LOOSE BY THE BLOWER VENDOR, INSTALLED BY THE CONTRACTOR. |


J-U-B ENGINEERS, INC.

J-U-B ENGINEERS, INC.
392 E. Winchester St., Suite 300
Salt Lake City, UT 84107
Phone: 801.547.0393
www.jub.com

Subconsultant:

Stantec

Stantec
2890 E Cottonwood Pkwy
Suite 300, Salt Lake City, Ut
84121
Tel: +1.801.617.3200
www.stantec.com


AGENCY

REVIEW


REUSE OF DRAWINGS
J-U-B SHALL RETAIN ALL COMMON LAW, STATUTORY, COPYRIGHT AND OTHER RESERVED RIGHTS OF THESE DRAWINGS, AND THE SAME SHALL NOT BE REUSED WITHOUT J-U-B'S PRIOR WRITTEN CONSENT. ANY REUSE WITHOUT WRITTEN CONSENT BY J-U-B WILL BE AT CLIENTS SOLE RISK AND WITHOUT LIABILITY OR LEGAL EXPOSURE TO J-U-B.


| NO. | DESCRIPTION | BY | APR. | DATE |
|---|---|---|---|---|
| | REVISION | | | |

SPANISH FORK & MAPELTON WRF
SPANISH FORK CITY CORPORATION

INSTRUMENTATION AND CONTROL
AERATION BLOWERS - I P&ID

FILE : 55-20-124_20I-606
JUB PROJ. # : 55-20-124
DRAWN BY: VBK
DESIGN BY: BH
CHECKED BY: SR
ONE INCH
AT FULL SIZE, IF NOT ONE INCH, SCALE ACCORDINGLY
LAST UPDATED: 6/30/2022

DRAWING:
20-I-606

SHEET: 531 OF 691


Plot Date:6/30/2022 8:07 PM Plotted By: Pinnaduwa-Hewage, Ranga
Date Created:3/1/2021 C:\PLANTCACHE\181301139_SPNSH FRK MAPLTN WRF DESIGN\PID DWG\55-20-124_20I-606.DWG

AERATION BLOWER NO 2A

AERATION BLOWER NO 2A BLOW OFF SILENCER VALVE

AERATION BLOWER NO 2B BLOW OFF SILENCER VALVE

AERATION BLOWER NO 2B

ATM PRESS PDI 2202 | HUMI-DITY AI 2203 | INTAKE TEMP TI 2203 | DIFF FLTR PRESS PDI 2201 | DIFF PRESS PDI 2204 | E-STOP YA 2200

SUCT TEMP TI 2210A | WIND TEMP TI 2210B | BEAR ING TEMP TI 2210C | VIBR VI 2210 | DISCH TEMP TI 2210D | DISCH PRESS PI 2210

RUN CMD HS 2210 | REMOTE YL 2210A | SPD CTRL SK 2210 | SPD IND SI 2210 | ETM KQI 2210 YL 2210B | FAIL YA 2210 | AMPS II 2210 | OVER-LOAD IAH 2210 | SURGE IAL 2210

HMI

20-I-609 (C)
FROM BLOWER MASTER CONTROLLER

I 2210

20-VCP-2001
BLOWER MASTER CONTROL PANEL PLC

O/C HS 2211

FAL 2211 | FAL 2221

O/C HS 2221

SUCT TEMP TI 2220A | WIND TEMP TI 2220B | BEAR ING TEMP TI 2220C | VIBR VI 2220 | DISCH TEMP TI 2220D | DISCH PRESS PI 2220

RUN CMD HS 2220 | REMOTE YL 2220A | SPD CTRL SK 2220 | SPD IND SI 2220 | ETM KQI 2220 YL 2220B | FAIL YA 2220 | AMPS II 2220 | OVER-LOAD IAH 2220 | SURGE IAL 2220

HMI

I 2220

20-VCP-2001
BLOWER MASTER CONTROL PANEL PLC

I 2210 | I 2211 | I 2221 | I 2220

PI 2202 | AI 2203 | TI 2203 | PDI 2201 | PDI 2204 | YA 2200

TI 2210A | TI 2210B | TI 2210C | VI 2210 | TI 2210D | PI 2210

HS 2210 | YL 2210A | SK 2210 | SI 2210 | YL 2210B | YA 2210 | II 2210 | IAH 2210 | IAL 2210

HS 2211

FSL 2211 | FSL 2221

HS 2221

TI 2220A | TI 2220B | TI 2220C | VI 2220 | TI 2220D | PI 2220

HS 2220 | YL 2220A | SK 2220 | SI 2220 | YL 2220B | YA 2220 | II 2220 | IAH 2220 | IAL 2220

20-VCP-2201
BLOWER NO 2 VCP

20-VCP-2201
BLOWER NO 2 VCP

E-STOP HS 2200

HOR HS 2210 | OFF YL 2210C | RUN YL 2210D

DRIVE TRIP CIRCUIT I 2210 | VFD FAULT YA 2210C

START HMS 2210A | STOP HMS 2210B | RUN YL 2210B | AMPS II 2210 | SPD SI 2210 | OVERLOAD IAH 2210 | TAH 2210

SPD CTRL SC 2210 | VFD RESET HMS 2210C | VFD AVAIL YL 2210A | E-STOP YA 2210B | GEN FAULT YA 2210A | SURGE IAL 2210 | VAH 2210

OI

VFD CP

20-VFD-2210
AERATION BLOWER NO 2A VFD

VENDOR DEFINED

OIT | OIT

BLOWER 2A

O/O HS 2211 | RESET HMS 2211 | RUN YL 2211A | STOP YL 2211B

BLOWER 2B

O/O HS 2221 | RESET HMS 2221 | RUN YL 2221A | STOP YL 2221B

HOR HS 2220 | OFF YL 2220C | RUN YL 2220D

DRIVE TRIP CIRCUIT I 2220 | VFD FAULT YA 2220C

START HMS 2220A | STOP HMS 2220B | RUN YL 2220B | AMPS II 2220 | SPD SI 2220 | OVERLOAD IAH 2220 | TAH 2220

SPD CTRL SC 2220 | VFD RESET HMS 2220C | VFD AVAIL YL 2220A | E-STOP YA 2220B | GEN FAULT YA 2220A | SURGE IAL 2220 | VAH 2220

OI

VFD CP

20-VFD-2220
AERATION BLOWER NO 2B VFD

20-VCP-2201
BLOWER NO 2 VCP

20-VCP-2201
BLOWER NO 2 VCP

FIELD

FIELD

PIT 2202

AIT 2203

TEMP / HUMIDITY

AE 2203

PDT 2201

ATM

4

20-FLTR-2201A
PRE-FILTER

4

FLEXIBLE CONNECTION PROVIDED BY BLOWER VENDOR

TP 2202

20-FLTR-2201B
FILTER

ATM

PDT 2204

SUCTION

TE 2210A

MTR

TE 2210B

BEAR

TE 2210C

VT 2210

VE 2210

M

20-BLW-2210
AERATION BLOWER NO 2A

TE 2210D

PT 2210

SOV 2211

FSL 2211

4

20-VC-2211

20-ME-2211
BLOW OFF SILENCER NO 1

ATM

TP 2203

4 | 4 | 4

20-VC-2210

20-VF-2210

14"-A (SS02)

20-I-609 (A)
TO AERATION BLOWERS COMMON HEADER

SUCTION

TE 2220A

MTR

TE 2220B

BEAR

TE 2220C

VT 2220

VE 2220

M

20-BLW-2220
AERATION BLOWER NO 2B

TE 2220D

PT 2220

SOV 2221

FSL 2221

4

20-VC-2221

20-ME-2221
BLOW OFF SILENCER NO 2

ATM

TP 2204

4 | 4 | 4

20-VC-2220

20-VF-2220

14"-A (SS02)

20-I-609 (B)
TO AERATION BLOWERS COMMON HEADER

20-BLW-2200
AERATION BLOWER NO 2 SKID
(VENDOR PROVIDED)

## SHEET KEYNOTES

| | |
|---|---|
| 4 | EQUIPMENT PROVIDED AND SHIPPED LOOSE BY THE BLOWER VENDOR, INSTALLED BY THE CONTRACTOR. |


J-U-B ENGINEERS, INC.

J-U-B ENGINEERS, INC.
392. E. Winchester St., Suite 300
Salt Lake City, UT 84107
Phone: 801.547.0393
www.jub.com

Subconsultant:

Stantec

Stantec
2890 E Cottonwood Pkwy
Suite 300, Salt Lake City, Ut 84121
Tel: +1.801.617.3200
www.stantec.com


AGENCY

REVIEW


REUSE OF DRAWINGS
J-U-B SHALL RETAIN ALL COMMON LAW, STATUTORY, COPYRIGHT AND OTHER RESERVED RIGHTS OF THESE DRAWINGS, AND THE SAME SHALL NOT BE REUSED WITHOUT J-U-B'S PRIOR WRITTEN CONSENT. ANY REUSE WITHOUT WRITTEN CONSENT BY J-U-B WILL BE AT CLIENTS SOLE RISK AND WITHOUT LIABILITY OR LEGAL EXPOSURE TO J-U-B.


| NO. | DESCRIPTION | DATE | BY | APR. |
|---|---|---|---|---|
| | REVISION | | | |

SPANISH FORK & MAPELTON WRF
SPANISH FORK CITY CORPORATION

INSTRUMENTATION AND CONTROL
AERATION BLOWERS - II P&ID

| | |
|---|---|
| FILE : | 55-20-124_20I-607 |
| JUB PROJ. # : | 55-20-124 |
| DRAWN BY: | VBK |
| DESIGN BY: | BH |
| CHECKED BY: | SR |

ONE INCH
AT FULL SIZE. IF NOT ONE INCH, SCALE ACCORDINGLY

LAST UPDATED: 6/30/2022

DRAWING:
20-I-607

SHEET: 532 OF 691

Plot Date:6/30/2022 8:07 PM Plotted By:r.Pinnaduwa-Hewage, Ranga
Date Created:5/28/2021 C:\PLANTCACHE\181301\39_SPNSH FRK MAPLTN WRF DESIGN\PID DWG\55-20-124_20I-607.DWG

AERATION BLOWER NO 3A

AERATION BLOWER NO 3A BLOW OFF SILENCER VALVE

AERATION BLOWER NO 3B BLOW OFF SILENCER VALVE

AERATION BLOWER NO 3B

ATM PRESS PDI 2302 | HUMI-DITY AI 2303 | INTAKE TEMP TI 2303 | DIFF FLTR PRESS PDI 2301 | DIFF PRESS PDI 2304 | E-STOP YA 2300

SUCT TEMP TI 2310A | WIND TEMP TI 2310B | BEAR ING TEMP TI 2310C | VIBR VI 2310 | DISCH TEMP TI 2310D | DISCH PRESS PI 2310

RUN CMD HS 2310 | REMOTE YL 2310A | SPD CTRL SK 2310 | SPD IND SI 2310 | ETM KQI 2310 YL 2310B | FAIL YA 2310 | AMPS II 2310 | OVER-LOAD IAH 2310 | SURGE IAL 2310

O/C HS 2311

FAL 2311 | FAL 2321

O/C HS 2321

SUCT TEMP TI 2320A | WIND TEMP TI 2320B | BEAR ING TEMP TI 2320C | VIBR VI 2320 | DISCH TEMP TI 2320D | DISCH PRESS PI 2320

RUN CMD HS 2320 | REMOTE YL 2320A | SPD CTRL SK 2320 | SPD IND SI 2320 | ETM KQI 2320 YL 2320B | FAIL YA 2320 | AMPS II 2320 | OVER-LOAD IAH 2320 | SURGE IAL 2320

HMI

20-I-609 (C)
FROM BLOWER MASTER CONTROLLER

I 2310 | I 2311 | I 2321 | I 2320

20-VCP-2001
BLOWER MASTER CONTROL PANEL PLC

20-VCP-2001
BLOWER MASTER CONTROL PANEL PLC

20-VCP-2301
BLOWER NO 3 VCP

20-VCP-2301
BLOWER NO 3 VCP

E-STOP HS 2300

HOR HS 2310 | OFF YL 2310C | RUN YL 2310D

DRIVE TRIP CIRCUIT I 2310 | VFD FAULT YA 2310C

START HMS 2310A | STOP HMS 2310B | RUN YL 2310B | AMPS II 2310 | SPD SI 2310 | OVERLOAD IAH 2310 | TAH 2310

SPD CTRL SC 2310 | VFD RESET HMS 2310C | VFD AVAIL YL 2310A | E-STOP YA 2310B | GEN FAULT YA 2310A | SURGE IAL 2310 | VAH 2310

OI

VFD CP

20-VFD-2310
AERATION BLOWER NO 3A VFD

OIT

VENDOR DEFINED

OIT

BLOWER 3A

O/O HS 2311 | RESET HMS 2311 | RUN YL 2311A | STOP YL 2311B

BLOWER 3B

O/O HS 2321 | RESET HMS 2321 | RUN YL 2321A | STOP YL 2321B

HOR HS 2320 | OFF YL 2320C | RUN YL 2320D

DRIVE TRIP CIRCUIT I 2320 | VFD FAULT YA 2320C

START HMS 2320A | STOP HMS 2320B | RUN YL 2320B | AMPS II 2320 | SPD SI 2320 | OVERLOAD IAH 2320 | TAH 2320

SPD CTRL SC 2320 | VFD RESET HMS 2320C | VFD AVAIL YL 2320A | E-STOP YA 2320B | GEN FAULT YA 2320A | SURGE IAL 2320 | VAH 2320

OI

VFD CP

20-VFD-2320
AERATION BLOWER NO 3B VFD

20-VCP-2301
BLOWER NO 3 VCP

20-VCP-2301
BLOWER NO 3 VCP

FIELD

FIELD

PIT 2302

AIT 2303

TEMP / HUMIDITY

AE 2303

ATM

4

F

20-FLTR-2301A
PRE-FILTER

4

FLEXIBLE CONNECTION PROVIDED BY BLOWER VENDOR

TP 2302

PDT 2301

F

20-FLTR-2301B
FILTER

ATM

PDT 2304

SUCTION

TE 2310A

MTR

TE 2310B

BEAR

TE 2310C

VT 2310

M

VE 2310

20-BLW-2310
AERATION BLOWER NO 3A

TE 2310D

PT 2310

SOV 2311

S

4

TP 2303

FSL 2311

4

20-VC-2311

4

ATM

20-ME-2311
BLOW OFF SILENCER NO 1

4

20-VC-2310

4

4

20-VF-2310

14"-A (SS02)

20-I-609 (A)
TO AERATION BLOWERS COMMON HEADER

SUCTION

TE 2320A

MTR

TE 2320B

BEAR

TE 2320C

VT 2320

M

VE 2320

20-BLW-2320
AERATION BLOWER NO 3B

TE 2320D

PT 2320

SOV 2321

S

4

TP 2304

FSL 2321

4

20-VC-2321

4

ATM

20-ME-2321
BLOW OFF SILENCER NO 2

4

20-VC-2320

4

4

20-VF-2320

14"-A (SS02)

20-I-609 (B)
TO AERATION BLOWERS COMMON HEADER

20-BLW-2300
AERATION BLOWER NO 3 SKID
(VENDOR PROVIDED)

## SHEET KEYNOTES

| | |
|---|---|
| 4 | EQUIPMENT PROVIDED AND SHIPPED LOOSE BY THE BLOWER VENDOR, INSTALLED BY THE CONTRACTOR. |

Plot Date:6/30/2022 8:07 PM Plotted By: Pinnaduwa-Hewage, Ranga
Date Created:5/28/2021 C:\PLANTCAD\E1\81301\39_SPNSH FRK MAPLTN WRF DESIGN\PID DWG\55-20-124_20I-608.DWG


J-U-B ENGINEERS, INC.

J-U-B ENGINEERS, INC.
392. E. Winchester St., Suite 300
Salt Lake City, UT 84107
Phone: 801.547.0393
www.jub.com

Subconsultant:

Stantec

Stantec
2890 E Cottonwood Pkwy
Suite 300, Salt Lake City, Ut
84121
Tel: +1.801.617.3200
www.stantec.com


AGENCY

REVIEW


REUSE OF DRAWINGS
J-U-B SHALL RETAIN ALL COMMON LAW, STATUTORY, COPYRIGHT AND OTHER RESERVED RIGHTS OF THESE DRAWINGS, AND THE SAME SHALL NOT BE REUSED WITHOUT J-U-B'S PRIOR WRITTEN CONSENT. ANY REUSE WITHOUT WRITTEN CONSENT BY J-U-B WILL BE AT CLIENTS SOLE RISK AND WITHOUT LIABILITY OR LEGAL EXPOSURE TO J-U-B.


| NO. | DESCRIPTION | BY | APR. | DATE |
|---|---|---|---|---|
| | REVISION | | | |

SPANISH FORK & MAPELTON WRF
SPANISH FORK CITY CORPORATION

INSTRUMENTATION AND CONTROL
AERATION BLOWERS - III P&ID

FILE : 55-20-124_20I-608
JUB PROJ. # : 55-20-124
DRAWN BY: VBK
DESIGN BY: BH
CHECKED BY: SR
ONE INCH
AT FULL SIZE. IF NOT ONE INCH, SCALE ACCORDINGLY
LAST UPDATED: 6/30/2022

DRAWING:
20-I-608

SHEET: 533 OF 691

## SHEET KEYNOTES

| | |
|---|---|
| 4 | EQUIPMENT PROVIDED AND SHIPPED LOOSE BY THE BLOWER VENDOR, INSTALLED BY THE CONTRACTOR. |

BLOWER DISCHARGE HEADER

COMMON DISCHARGE HEADER BLOW-OFF-VALVE

BLWR START SEQ SEL A/M HS 2005A
BLWR START SEQ SEL HS 2005B
BLWR SYS A/M HS 2005C
PRESS SELECT HS 2001A
PRESS SELECT A/M HS 2001B
WARN PAH 2001
ALARM PAHH 2001
PDAH 2001
PI 2001A
PI 2001B
POSI CMD ZC 2002
POSI FBK ZI 2002
REMOTE OPEN YL 2002
ZLO 2002
CLSD ZLC 2002
TORQ NAHH 2002

HMI

20-VCP-2001
BLOWER MASTER
CONTROL PANEL PLC

20-I-606 (C) TO AERATION BLOWER NO 1A & 1B
20-I-607 (C) TO AERATION BLOWER NO 2A & 2B
20-I-608 (C) TO AERATION BLOWER NO 3A & 3B

I 2005
I 2001
I 2002

PIT 2001A
PIT 2001B
LSA

ZC 2002
ZI 2002
YL 2002
ZLO 2002
ZLC 2002
NAHH 2002

LOR HS 2002
OSC HS 2002
CLSD ZLC 2002
TORQ NAHH 2002
OPND ZLO 2002
ZIC 2002
OI
20-MOV-2002
VALVE ACTUATOR

MOV 2002

ATM
20-ME-2002
SILENCER

6"-A (SS02)
2.5"-A(SS02)
6"-A (SS02)
20-VF-2005
30"-A (SS02)
20-VF-2001
20-VF-2002
20-VF-2003
20-VF-2004

4"-A (SS02) 20-I-603 TO MBR INFLUENT CHANNEL
16"-A (SS02) 20-I-610 (A) TO AERATION CONTROL FOR BNR TRAIN NO 1 AEROBIC BASINS
16"-A (SS02) 20-I-611 (B) TO AERATION CONTROL FOR BNR TRAIN NO 2 AEROBIC BASINS
4"-A (SS02) 20-I-605 TO MBR INFLUENT CHANNEL

14"-A (SS02) 20-I-606 (A) FROM AERATION BLOWER NO 1A
14"-A (SS02) 20-I-606 (B) FROM AERATION BLOWER NO 1B
14"-A (SS02) 20-I-607 (A) FROM AERATION BLOWER NO 2A
14"-A (SS02) 20-I-607 (B) FROM AERATION BLOWER NO 2B
14"-A (SS02) 20-I-608 (A) FROM AERATION BLOWER NO 3A
14"-A (SS02) 20-I-608 (B) FROM AERATION BLOWER NO 3B


J-U-B ENGINEERS, INC.
J-U-B ENGINEERS, INC.
392. E. Winchester St., Suite 300
Salt Lake City, UT 84107
Phone: 801.547.0393
www.jub.com

Subconsultant:
Stantec
Stantec
2890 E Cottonwood Pkwy
Suite 300, Salt Lake City, Ut 84121
Tel: +1.801.617.3200
www.stantec.com


AGENCY

REVIEW


REUSE OF DRAWINGS
J-U-B SHALL RETAIN ALL COMMON LAW, STATUTORY, COPYRIGHT AND OTHER RESERVED RIGHTS OF THESE DRAWINGS, AND THE SAME SHALL NOT BE REUSED WITHOUT J-U-B'S PRIOR WRITTEN CONSENT. ANY REUSE WITHOUT WRITTEN CONSENT BY J-U-B WILL BE AT CLIENTS SOLE RISK AND WITHOUT LIABILITY OR LEGAL EXPOSURE TO J-U-B.


| NO. | DESCRIPTION | BY | APR. | DATE |
|---|---|---|---|---|
| | REVISION | | | |

SPANISH FORK & MAPELTON WRF
SPANISH FORK CITY CORPORATION

INSTRUMENTATION AND CONTROL
AERATION BLOWERS DISTRIBUTION - P&ID

FILE : 55-20-124_20I-609
JUB PROJ. # : 55-20-124
DRAWN BY: VBK
DESIGN BY: BH
CHECKED BY: SR
ONE INCH
AT FULL SIZE, IF NOT ONE INCH, SCALE ACCORDINGLY
LAST UPDATED: 6/30/2022

DRAWING:
20-I-609

SHEET: 534 OF 691


Plot Date:6/30/2022 8:07 PM Plotted By: Pinnaduwa-Hewage, Ranga
Date Created:5/26/2021 C:\PLANTCACHE\181301139_SPNSH FRK MAPLTN WRF DESIGN\PID DWG\55-20-124_20I-609.DWG

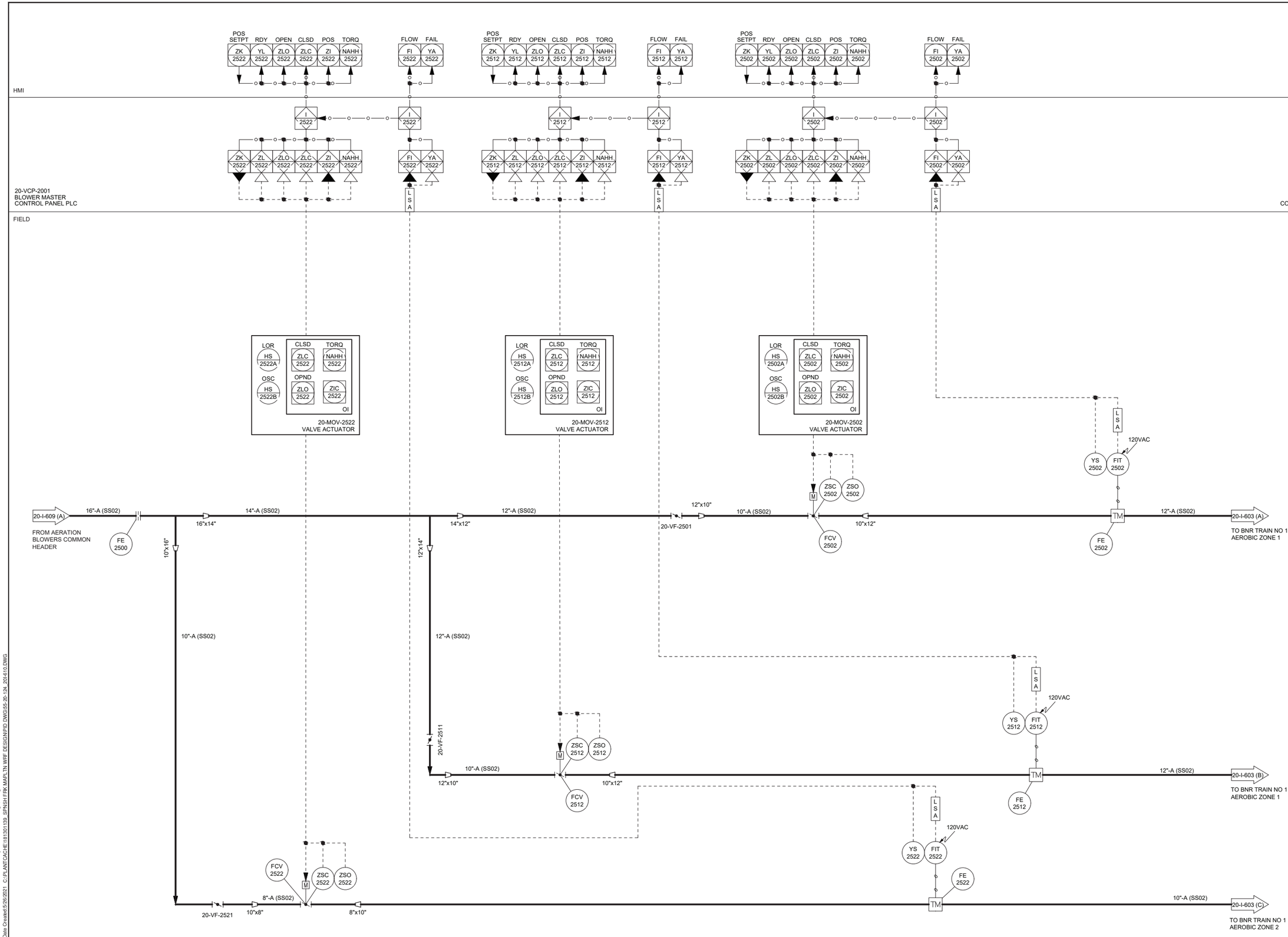


Plot Date:6/30/2022 8:10 PM Plotted By: Pinnaduwa-Hewage, Ranga
Date Created:5/26/2021 C:\PLANTCACHE\18130\139_SPNSH FRK MAPLTN WRF DESIGN\PID DWG\55-20-124_20I-610.DWG

J-U-B ENGINEERS, INC.


J-U-B ENGINEERS, INC.
392. E. Winchester St., Suite 300
Salt Lake City, UT 84107
Phone: 801.547.0393
www.jub.com


Subconsultant:

Stantec


Stantec
2890 E Cottonwood Pkwy
Suite 300, Salt Lake City, Ut
84121
Tel: +1.801.617.3200
www.stantec.com


AGENCY

REVIEW


REUSE OF DRAWINGS
J-U-B SHALL RETAIN ALL COMMON LAW, STATUTORY, COPYRIGHT AND OTHER RESERVED RIGHTS OF THESE DRAWINGS, AND THE SAME SHALL NOT BE REUSED WITHOUT J-U-B'S PRIOR WRITTEN CONSENT. ANY REUSE WITHOUT WRITTEN CONSENT BY J-U-B WILL BE AT CLIENT'S SOLE RISK AND WITHOUT LIABILITY OR LEGAL EXPOSURE TO J-U-B.


| NO. | DESCRIPTION | BY | APR | DATE |
|---|---|---|---|---|
| | REVISION | | | |

# SPANISH FORK & MAPELTON WRF
# SPANISH FORK CITY CORPORATION

## INSTRUMENTATION AND CONTROL
## BNR TRAIN NO 1 AERATION CONTROL P&ID

FILE : 55-20-124_20I-610
JUB PROJ. # : 55-20-124
DRAWN BY: VBK
DESIGN BY: BH
CHECKED BY: SR
ONE INCH
AT FULL SIZE, IF NOT ONE INCH, SCALE ACCORDINGLY
LAST UPDATED: 6/30/2022

DRAWING:
20-I-610

SHEET: 535 OF 691

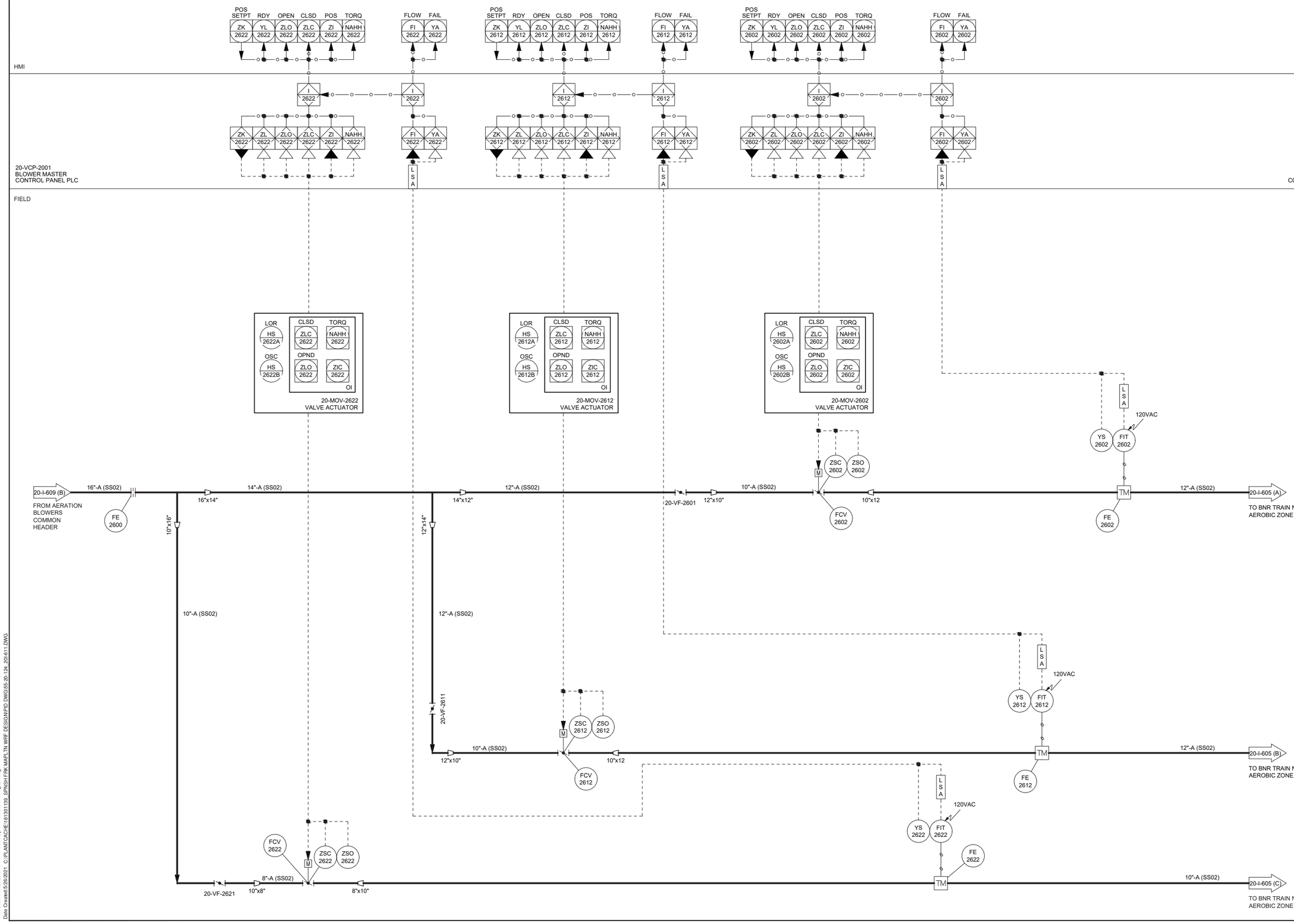



J-U-B ENGINEERS, INC.

J-U-B ENGINEERS, INC.
392. E. Winchester St., Suite 300
Salt Lake City, UT 84107
Phone: 801.547.0393
www.jub.com

Subconsultant:

Stantec

Stantec
2890 E Cottonwood Pkwy
Suite 300, Salt Lake City, Ut
84121
Tel: +1.801.617.3200
www.stantec.com


AGENCY

REVIEW


REUSE OF DRAWINGS
J-U-B SHALL RETAIN ALL COMMON LAW, STATUTORY, COPYRIGHT AND OTHER RESERVED RIGHTS OF THESE DRAWINGS, AND THE SAME SHALL NOT BE REUSED WITHOUT J-U-B'S PRIOR WRITTEN CONSENT. ANY REUSE WITHOUT WRITTEN CONSENT BY J-U-B WILL BE AT CLIENTS SOLE RISK AND WITHOUT LIABILITY OR LEGAL EXPOSURE TO J-U-B.


| NO. | DESCRIPTION | BY | APP. | DATE |
|---|---|---|---|---|
| | REVISION | | | |

# SPANISH FORK & MAPELTON WRF
# SPANISH FORK CITY CORPORATION

## INSTRUMENTATION AND CONTROL
## BNR TRAIN NO 2 AERATION CONTROL P&ID

FILE : 55-20-124_20I-611
JUB PROJ. # : 55-20-124
DRAWN BY: VBK
DESIGN BY: BH
CHECKED BY: SR

ONE INCH
AT FULL SIZE, IF NOT ONE INCH, SCALE ACCORDINGLY

LAST UPDATED: 6/30/2022

DRAWING:
20-I-611

SHEET: 536 OF 691


Plot Date:6/30/2022 8:10 PM Plotted By: Pimradusa-Hewage, Ranga
Date Created:5/26/2021 C:\PLANTCAD\HE\181301\39_SPNSH FRK MAPLTN WRF DESIGN\PID DWG\55-20-124_20I-611.DWG

MBR BASIN NO 1 MASTER CONTROL

HMI

3 MBR SYSTEM MASTER VCP PLC

3 MBR SYSTEM RIO NO 1

FIELD

O/C HS 1101 | RDY YL 1101 | OPEN ZLO 1101 | CLSD ZLC 1101 | FLOW FI 1101 | O/C HS 1102 | RDY YL 1102 | OPEN ZLO 1102 | CLSD ZLC 1102 | TORQ NAHH 1102

EMPTY LALL 1105 | FLOOD LAHH 1105 | LINE CHARGE CONFIRMED LAH 1104

SYS S/S HS 1104 | INFL FLOW SETPT FK 1104 | SYS RUN YL 1104A | SYS RDY YL 1104B | SYS GEN FAULT YA 1104 | SYS CLEAN MODE YL 1104C | SYS OFF MODE YL 1104D

TM PRESS PI 1110 | WARN PAH 1110 | ALARM PAHH 1110

LAH 1106 | LAL 1106

O/C HS 1115 | RDY YL 1115 | OPEN ZLO 1115 | CLSD ZLC 1115 | TORQ NAHH 1115

HS 1120

I 1101 | I 1102 | I 1105 | I 1104B | I 1104A | I 1115 | I 1120

OP LEVEL ACHIEVED

SYS AIR STOP LEVEL

TO / FROM RAS FEED PUMP FLOW CONTROL 35-I-650(B)

TO / FROM AIR SCOUR BLOWER 35-I-654(B)

35-I-641(B) TO PERMEATE PUMP CONTROLLER

HIGH-HIGH TRANS-MEMBRANE (TM) PRESSURE

35-I-641(C) HIGH HIGH PERMEATE TURBIDITY

YL ZLO ZLC ZK ZI 1101 | FIT 1101 | HS YL ZLO ZLC NAHH 1102 | LT 1105 | HS 1103 | HS 1104 | LSH 1104 | PIT 1110 | LSH LSL 1106 | HS YL ZLO ZLC NAHH 1115 | HS 1120

L/R HS 1101A | O/C HS 1101B | CLSD ZLC 1101 | OPND ZLO 1101 | PI 1101 | ZIC 1101 | OI

30-FCV-1101 VALVE ACTUATOR

LOR HS 1102A | O/C HS 1102B | CLSD ZLC 1102 | OPND ZLO 1102 | TORQ NAHH 1102 | OI

30-MOG-1102 GATE ACTUATOR

INSTRUMENT AIR SUPPLY

1"-PA (SS01) PRIMING EDUCTOR AIR FROM PLANT AIR SYSTEM

24VDC

TO ATM

FIT 1101

FCV 1101

35-I-611 10"-AS (SS02) FROM MBR SYSTEM AIR SCOUR BLOWERS

FE 1101

TP 1101

TP 1102

SOV 1103

30-ME-1103

MOV 1104

LSH 1104

TP 1104

LT 1105

SOV 1120

1"-PA (SS01) TESTING AIR FROM MBR AIR SYSTEM

PIT 1110

16"-MP (SS02) 35-I-601(A) TO / FROM MBR BASIN NO 1 PERMEATE PUMP

10"-MP (SS02) 35-I-601(B) RECIRCULATION FROM MBR BASIN NO 1 PERMATE PUMP

LSH 1106 | LSL 1106

30-I-607 CONTINUED TO RAS / WAS CHANNEL

20-I-603 CONTINUED FROM MBR INFLUENT CHANNEL

MOG 1102

MBR BASIN NO 1 SKID

MBR BASIN NO 1

480VAC

L/R HS 1115A | O/C HS 1115B | CLSD ZLC 1115 | OPND ZLO 1115 | TORQ NAHH 1115 | OI

30-MOV-1115 VALVE ACTUATOR

MOV 1115

6"-DR (DI02) 05-I-602 TO PLANT DRAIN

## GENERAL SHEET NOTES

1. ALL EQUIPMENT, INSTRUMENTATION AND FIELD DEVICES SHOWN SHALL BE FURNISHED BY THE MBR SYSTEM SUPPLIER UNLESS SPECIFICALLY NOTED OTHERWISE. FIELD INSTALLATION BY CONTRACTOR.
2. VENDOR SKID SHALL INCLUDE INDICATED HEADER PIPING WITH FLANGED TIE IN POINTS. OFF-SKID PIPELINES FURNISHED AND INSTALLED BY THE CONTRACTOR.
3. FIELD WIRING BY THE CONTRACTOR.

## SHEET KEYNOTES

| | |
|---|---|
| 1 | MEMBRANE SYSTEM SUPPLIER FURNISHED SOLENOID VALVES SHALL BE EQUIPPED WITH MANUAL POSITION OVERRIDE. |
| 2 | PIPE INSTALLED TUNING FORK TYPE SENSOR. |
| 3 | PLC-BASED VCP (WITH OPERATOR INTERFACE) SHALL BE FURNISHED AND PROGRAMMED BY THE MBR SYSTEM VENDOR. |
| 4 | FURNISH AND INSTALL SUNSHIELD. |
| 5 | MBR SYSTEM SUPPLIER FURNISHED EQUIPMENT SHIPPED LOOSE FOR CONTRACTOR INSTALLATION. |


J-U-B ENGINEERS, INC.

J-U-B ENGINEERS, INC.
392 E. Winchester St., Suite 300
Salt Lake City, UT 84107
Phone: 801.547.0393
www.jub.com

Subconsultant:

Stantec
Stantec
2890 E Cottonwood Pkwy
Suite 300, Salt Lake City, Ut
84121
Tel: +1.801.617.3200
www.stantec.com


AGENCY

REVIEW


REUSE OF DRAWINGS
J-U-B SHALL RETAIN ALL COMMON LAW, STATUTORY, COPYRIGHT AND OTHER RESERVED RIGHTS OF THESE DRAWINGS, AND THE SAME SHALL NOT BE REUSED WITHOUT J-U-B'S PRIOR WRITTEN CONSENT. ANY REUSE WITHOUT WRITTEN CONSENT BY J-U-B WILL BE AT CLIENTS SOLE RISK AND WITHOUT LIABILITY OR LEGAL EXPOSURE TO J-U-B.


| NO. | DESCRIPTION | BY | DATE |
|---|---|---|---|
| A | ADDENDUM NO 2 | VBK | 04/06/2021 |
| | REVISION | BH | |

SPANISH FORK & MAPELTON WRF
SPANISH FORK CITY CORPORATION

INSTRUMENTATION AND CONTROL
MBR BASIN NO 1 P&ID

FILE : 55-20-124_30I-601
JUB PROJ. # : 55-20-124
DRAWN BY: VBK
DESIGN BY: BH
CHECKED BY: SR
ONE INCH
AT FULL SIZE. IF NOT ONE INCH, SCALE ACCORDINGLY
LAST UPDATED: 6/30/2022

DRAWING:
30-I-601

SHEET: 537 OF 691


Plot Date:6/30/2022 8:10 PM Plotted By: Pinnaduwa-Hewage, Ranga
Date Created:4/28/2021 C:\PLANTCACHE\181301139_SPNSH FRK MAPLTN WRF DESIGN\PID DWG\55-20-124_30I-601.DWG

MBR BASIN NO 2 MASTER CONTROL

HMI

3 MBR SYSTEM MASTER VCP PLC

3 MBR SYSTEM RIO NO 1

FIELD

O/C RDY OPEN CLSD HS 1201 YL 1201 ZLO 1201 ZLC 1201

FLOW FI 1201

O/C RDY OPEN CLSD TORQ HS 1202 YL 1202 ZLO 1202 ZLC 1202 NAHH 1202

EMPTY FLOOD LALL 1205 LI 1205 LAHH 1205

LINE CHARGE CONFIRMED LAH 1204

SYS S/S HS 1204 | INFL FLOW SETPT FK 1204 | SYS RUN YL 1204A | SYS RDY YL 1204B | SYS GEN FAULT YA 1204 | SYS CLEAN MODE YL 1204C | SYS OFF MODE YL 1204D

TM PRESS PI 1210 WARN PAH 1210 ALARM PAHH 1210

LAH 1206 LAL 1206

O/C RDY OPEN CLSD TORQ HS 1215 YL 1215 ZLO 1215 ZLC 1215 NAHH 1215

HS 1220

I 1201 | I 1202 | I 1205 | I 1204B | I 1204A | I 1215 | I 1220

OP LEVEL ACHIEVED

SYS AIR STOP LEVEL

TO / FROM RAS FEED PUMP FLOW CONTROL 35-I-650(B)

TO / FROM AIR SCOUR BLOWER 35-I-654(B)

35-I-642(B) TO PERMEATE PUMP CONTROLLER

HIGH-HIGH TRANS-MEMBRANE (TM) PRESSURE

35-I-642(C) HIGH HIGH PERMEATE TURBIDITY

YL ZLO ZLC ZK ZI 1201 | FIT 1201 | HS YL ZLO ZLC NAHH 1202 | LT 1205 | HS 1203 | HS 1204 | LSH 1204 | PIT 1210 | LSH LSL 1206 | HS YL ZLO ZLC NAHH 1215 | HS 1220

L/R HS 1201A O/C HS 1201B CLSD ZLC 1201 OPND ZLO 1201 PI 1201 ZIC 1201 OI — 5 30-FCV-1201 VALVE ACTUATOR

INSTRUMENT AIR SUPPLY

LOR HS 1202A O/C HS 1202B CLSD ZLC 1202 OPND ZLO 1202 TORQ NAHH 1202 OI — 30-MOG-1202 GATE ACTUATOR

1"-PA (SS01) PRIMING EDUCTOR AIR FROM PLANT AIR SYSTEM

24VDC FIT 1201 TO ATM

FCV 1201 5 10"-AS (SS02) 35-I-611 FROM MBR SYSTEM AIR SCOUR BLOWERS

5 TM FE 1201

TP 1201 | TP 1202

SOV 1203 S 1 — 30-ME-1203

MOV 1204 M 1 | LSH 1204 2

SOV 1220 S — 1"-PA (SS01) TESTING AIR FROM MBR AIR SYSTEM

LSA 5 4 PIT 1210

16"-MP (SS02) 35-I-602(A) TO / FROM MBR BASIN NO 2 PERMEATE PUMP

TP 1204

LSA 5 4 LT 1205

10"-MP (SS02) 35-I-602(B) RECIRCULATION FROM MBR BASIN NO 2 PERMATE PUMP

LSH 1206 LSL 1206

20-I-603 CONTINUED FROM MBR INFLUENT CHANNEL

30-I-607 CONTINUED TO RAS / WAS CHANNEL

MOG 1202

MBR BASIN NO 2 SKID

MBR BASIN NO 2

480VAC

L/R HS 1215A O/C HS 1215B CLSD ZLC 1215 OPND ZLO 1215 TORQ NAHH 1215 OI — 5 30-MOV-1215 VALVE ACTUATOR

5 M MOV 1215

6"-DR (DI02) 05-I-602 TO PLANT DRAIN

## GENERAL SHEET NOTES

1. ALL EQUIPMENT, INSTRUMENTATION AND FIELD DEVICES SHOWN SHALL BE FURNISHED BY THE MBR SYSTEM SUPPLIER UNLESS SPECIFICALLY NOTED OTHERWISE. FIELD INSTALLATION BY CONTRACTOR.
2. VENDOR SKID SHALL INCLUDE INDICATED HEADER PIPING WITH FLANGED TIE IN POINTS. OFF-SKID PIPELINES FURNISHED AND INSTALLED BY THE CONTRACTOR.
3. FIELD WIRING BY THE CONTRACTOR.

## SHEET KEYNOTES

| | |
|---|---|
| 1 | MEMBRANE SYSTEM SUPPLIER FURNISHED SOLENOID VALVES SHALL BE EQUIPPED WITH MANUAL POSITION OVERRIDE. |
| 2 | PIPE INSTALLED TUNING FORK TYPE SENSOR. |
| 3 | PLC-BASED VCP (WITH OPERATOR INTERFACE) SHALL BE FURNISHED AND PROGRAMMED BY THE MBR SYSTEM VENDOR. |
| 4 | FURNISH AND INSTALL SUNSHIELD. |
| 5 | MBR SYSTEM SUPPLIER FURNISHED EQUIPMENT SHIPPED LOOSE FOR CONTRACTOR INSTALLATION. |


J-U-B ENGINEERS, INC.
J-U-B ENGINEERS, INC.
392 E. Winchester St., Suite 300
Salt Lake City, UT 84107
Phone: 801.547.0393
www.jub.com

Subconsultant:
Stantec
Stantec
2890 E Cottonwood Pkwy
Suite 300, Salt Lake City, Ut
84121
Tel: +1.801.617.3200
www.stantec.com


AGENCY

REVIEW


REUSE OF DRAWINGS
J-U-B SHALL RETAIN ALL COMMON LAW, STATUTORY, COPYRIGHT AND OTHER RESERVED RIGHTS OF THESE DRAWINGS, AND THE SAME SHALL NOT BE REUSED WITHOUT J-U-B'S PRIOR WRITTEN CONSENT. ANY REUSE WITHOUT WRITTEN CONSENT BY J-U-B WILL BE AT CLIENTS SOLE RISK AND WITHOUT LIABILITY OR LEGAL EXPOSURE TO J-U-B.


| NO. | DESCRIPTION | BY (APP.) | DATE |
|---|---|---|---|
| A | ADDENDUM NO 2 | VBK (BH) | 04/06/2021 |

REVISION

SPANISH FORK & MAPELTON WRF
SPANISH FORK CITY CORPORATION

INSTRUMENTATION AND CONTROL
MBR BASIN NO 2 P&ID

FILE : 55-20-124_30I-602
JUB PROJ. # : 55-20-124
DRAWN BY: VBK
DESIGN BY: BH
CHECKED BY: SR
ONE INCH
AT FULL SIZE. IF NOT ONE INCH, SCALE ACCORDINGLY
LAST UPDATED: 6/30/2022

DRAWING:
30-I-602

SHEET: 538 OF 691


Plot Date:6/30/2022 8:10 PM Plotted By: Pimradawa Hewage, Ranga
Date Created:4/28/2021 C:\PLANTCACHE\181301130_SPNSH FRK MAPLTN WRF DESIGN\PID DWG\55-20-124_30I-602.DWG

MBR BASIN NO 3 MASTER CONTROL

HMI

3 MBR SYSTEM MASTER VCP PLC

3 MBR SYSTEM RIO NO 2

FIELD

O/C RDY OPEN CLSD ZLC HS 1301 YL 1301 ZLO 1301 ZLC 1301

FLOW FI 1301

O/C RDY OPEN CLSD TORQ HS 1302 YL 1302 ZLO 1302 ZLC 1302 NAHH 1302

EMPTY FLOOD LALL LI LAHH 1305 1305 1305

LINE CHARGE CONFIRMED LAH 1304

SYS S/S HS 1304 | INFL FLOW SETPT FK 1304 | SYS RUN YL 1304A | SYS RDY YL 1304B | SYS GEN FAULT YA 1304 | SYS CLEAN MODE YL 1304C | SYS OFF MODE YL 1304D

TM PRESS WARN ALARM PI 1310 PAH 1310 PAHH 1310

LAH LAL 1306 1306

O/C RDY OPEN CLSD TORQ HS YL ZLO ZLC NAHH 1315 1315 1315 1315 1315

HS 1320

YL ZLO ZLC ZK ZI 1301 1301 1301 1301 1301 | FIT 1301

HS YL ZLO ZLC NAHH 1302 1302 1302 1302 1302

LT 1305 | HS 1303 | HS 1304 | LSH 1304 | PIT 1310 | LSH LSL 1306 1306 | HS YL ZLO ZLC NAHH 1315 1315 1315 1315 1315 | HS 1320

SP A

OP LEVEL ACHIEVED

SYS AIR STOP LEVEL

I 1301 | I 1302 | I 1305 | I 1304B | I 1304A | I 1315 | I 1320

TO / FROM RAS FEED PUMP FLOW CONTROL 35-I-651(B)

TO / FROM AIR SCOUR BLOWER 35-I-655(B)

35-I-643(B) TO PERMEATE PUMP CONTROLLER

HIGH-HIGH TRANS-MEMBRANE (TM) PRESSURE

35-I-643(C) HIGH HIGH PERMEATE TURBIDITY

L/R HS 1301A O/C HS 1301B CLSD ZLC 1301 OPND ZLO 1301 PI 1301 ZIC 1301 OI

5 30-FCV-1301 VALVE ACTUATOR

INSTRUMENT AIR SUPPLY

LOR HS 1302A O/C HS 1302B CLSD ZLC 1302 OPND ZLO 1302 TORQ NAHH 1302 OI

30-MOG-1302 GATE ACTUATOR

1"-PA (SS01) PRIMING EDUCTOR AIR FROM PLANT AIR SYSTEM

24VDC

TO ATM

FIT 1301

FCV 1301

FE 1301

TM

35-I-611 10"-AS (SS02) FROM MBR SYSTEM AIR SCOUR BLOWERS

TP 1301

TP 1302

SOV 1303 S 1

30-ME-1303

MOV 1304 M 1

LSH 1304 2

SOV 1320 S

1"-PA (SS01) TESTING AIR FROM MBR AIR SYSTEM

PIT 1310

16"-MP (SS02) 30-I-603(A) TO / FROM MBR BASIN NO 3 PERMEATE PUMP

TP 1304

LT 1305

10"-MP (SS02) 35-I-603(B) RECIRCULATION FROM MBR BASIN NO 3 PERMATE PUMP

LSH 1306 LSL 1306

20-I-603 CONTINUED FROM MBR INFLUENT CHANNEL

30-I-607 CONTINUED TO RAS / WAS CHANNEL

MOG 1302

MBR BASIN NO 3 SKID

MBR BASIN NO 3

480VAC

L/R HS 1315A O/C HS 1315B CLSD ZLC 1315 OPND ZLO 1315 TORQ NAHH 1315 OI

5 30-MOV-1315 VALVE ACTUATOR

MOV 1315

6"-DR (DI02) 05-I-602 TO PLANT DRAIN

## GENERAL SHEET NOTES

1. ALL EQUIPMENT, INSTRUMENTATION AND FIELD DEVICES SHOWN SHALL BE FURNISHED BY THE MBR SYSTEM SUPPLIER UNLESS SPECIFICALLY NOTED OTHERWISE. FIELD INSTALLATION BY CONTRACTOR.
2. VENDOR SKID SHALL INCLUDE INDICATED HEADER PIPING WITH FLANGED TIE IN POINTS. OFF-SKID PIPELINES FURNISHED AND INSTALLED BY THE CONTRACTOR.
3. FIELD WIRING BY THE CONTRACTOR.

## SHEET KEYNOTES

| | |
|---|---|
| 1 | MEMBRANE SYSTEM SUPPLIER FURNISHED SOLENOID VALVES SHALL BE EQUIPPED WITH MANUAL POSITION OVERRIDE. |
| 2 | PIPE INSTALLED TUNING FORK TYPE SENSOR. |
| 3 | PLC-BASED VCP (WITH OPERATOR INTERFACE) SHALL BE FURNISHED AND PROGRAMMED BY THE MBR SYSTEM VENDOR. |
| 4 | FURNISH AND INSTALL SUNSHIELD. |
| 5 | MBR SYSTEM SUPPLIER FURNISHED EQUIPMENT SHIPPED LOOSE FOR CONTRACTOR INSTALLATION. |


J-U-B ENGINEERS, INC.

J-U-B ENGINEERS, INC.
392 E. Winchester St., Suite 300
Salt Lake City, UT 84107
Phone: 801.547.0393
www.jub.com

Subconsultant:

Stantec
Stantec
2890 E Cottonwood Pkwy
Suite 300, Salt Lake City, Ut
84121
Tel: +1.801.617.3200
www.stantec.com


AGENCY

REVIEW


REUSE OF DRAWINGS
J-U-B SHALL RETAIN ALL COMMON LAW, STATUTORY, COPYRIGHT AND OTHER RESERVED RIGHTS OF THESE DRAWINGS, AND THE SAME SHALL NOT BE REUSED WITHOUT J-U-B'S PRIOR WRITTEN CONSENT. ANY REUSE WITHOUT WRITTEN CONSENT BY J-U-B WILL BE AT CLIENTS SOLE RISK AND WITHOUT LIABILITY OR LEGAL EXPOSURE TO J-U-B.


| NO. | DESCRIPTION | BY (APP.) | DATE |
|---|---|---|---|
| A | ADDENDUM NO 2 | VBK (BH) | 04/06/2021 |

REVISION

SPANISH FORK & MAPELTON WRF
SPANISH FORK CITY CORPORATION

INSTRUMENTATION AND CONTROL
MBR BASIN NO 3 P&ID

FILE : 55-20-124_30I-603
JUB PROJ. # : 55-20-124
DRAWN BY: VBK
DESIGN BY: BH
CHECKED BY: SR
ONE INCH
AT FULL SIZE. IF NOT ONE INCH, SCALE ACCORDINGLY
LAST UPDATED: 6/30/2022

DRAWING:
30-I-603

SHEET: 539 OF 691

Plot Date:6/30/2022 8:10 PM Plotted By: Pinnaduwa-Hewage, Ranga
Date Created:4/28/2021 C:\PLANTCACHE\181301193_SPNSH FRK MAPLTN WRF DESIGN\PID DWG\55-20-124_30I-603.DWG

MBR SYSTEM NO 4 MASTER CONTROL

HMI

3 MBR SYSTEM MASTER VCP PLC

3 MBR SYSTEM RIO NO 2

FIELD

O/C RDY OPEN CLSD HS 1401 YL 1401 ZLO 1401 ZLC 1401

FLOW FI 1401

O/C RDY OPEN CLSD TORQ HS 1402 YL 1402 ZLO 1402 ZLC 1402 NAHH 1402

EMPTY FLOOD LALL 1405 LI 1405 LAHH 1405

LINE CHARGE CONFIRMED LAH 1404

SYS S/S HS 1404 | INFL FLOW SETPT FK 1404 | SYS RUN YL 1404A | SYS RDY YL 1404B | SYS GEN FAULT YA 1404 | SYS CLEAN MODE YL 1404C | SYS OFF MODE YL 1404D

TM PRESS PI 1410 | WARN PAH 1410 | ALARM PAHH 1410

LAH 1406 LAL 1406

O/C RDY OPEN CLSD TORQ HS 1415 YL 1415 ZLO 1415 ZLC 1415 NAHH 1415

HS 1420

I 1401 | I 1402 | I 1405 | I 1404B | I 1404A | I 1415 | I 1420

OP LEVEL ACHIEVED

SYS AIR STOP LEVEL

TO / FROM RAS FEED PUMP FLOW CONTROL 35-I-651(B)

TO / FROM AIR SCOUR BLOWER 35-I-655(B)

35-I-644(B) TO PERMEATE PUMP CONTROLLER

HIGH-HIGH TRANS-MEMBRANE (TM) PRESSURE

35-I-644(C) HIGH HIGH PERMEATE TURBIDITY

YL 1401 ZLO 1401 ZLC 1401 ZK 1401 ZI 1401 | FIT 1401 | HS 1402 YL 1402 ZLO 1402 ZLC 1402 NAHH 1402 | LT 1405 | HS 1403 | HS 1404 | LSH 1404 | PIT 1410 | LSH 1406 LSL 1406 | HS 1415 YL 1415 ZLO 1415 ZLC 1415 NAHH 1415 | HS 1420

L/R HS 1401A O/C HS 1401B CLSD ZLC 1401 OPND ZLO 1401 PI 1401 ZIC 1401 OI — 5 30-FCV-1401 VALVE ACTUATOR

LOR HS 1402A O/C HS 1402B CLSD ZLC 1402 OPND ZLO 1402 TORQ NAHH 1402 OI — 30-MOG-1402 GATE ACTUATOR

INSTRUMENT AIR SUPPLY

1"-PA (SS01) PRIMING EDUCTOR AIR FROM PLANT AIR SYSTEM

TO ATM

24VDC

FIT 1401

FCV 1401

35-I-611 FROM MBR SYSTEM AIR SCOUR BLOWERS

10"-AS (SS02)

TM

FE 1401

TP 1401

TP 1402

SOV 1403 — 30-ME-1403

MOV 1404 — LSH 1404

SOV 1420 — 1"-PA (SS01) — TESTING AIR FROM MBR AIR SYSTEM

PIT 1410

16"-MP (SS02) — 35-I-604(A) — TO / FROM MBR BASIN NO 4 PERMEATE PUMP

TP 1404

LT 1405

10"-MP (SS02) — 35-I-604(B) — RECIRCULATION FROM MBR BASIN NO 4 PERMATE PUMP

LSH 1406 LSL 1406

20-I-605 CONTINUED FROM MBR INFLUENT CHANNEL

30-I-607 CONTINUED TO RAS / WAS CHANNEL

MOG 1402

MBR BASIN NO 4 SKID

MBR BASIN NO 4

480VAC

L/R HS 1415A O/C HS 1415B CLSD ZLC 1415 OPND ZLO 1415 TORQ NAHH 1415 OI — 5 30-MOV-1415 VALVE ACTUATOR

MOV 1415

6"-DR (DI02) — 05-I-602 — TO PLANT DRAIN

## GENERAL SHEET NOTES

1. ALL EQUIPMENT, INSTRUMENTATION AND FIELD DEVICES SHOWN SHALL BE FURNISHED BY THE MBR SYSTEM SUPPLIER UNLESS SPECIFICALLY NOTED OTHERWISE. FIELD INSTALLATION BY CONTRACTOR.
2. VENDOR SKID SHALL INCLUDE INDICATED HEADER PIPING WITH FLANGED TIE IN POINTS. OFF-SKID PIPELINES FURNISHED AND INSTALLED BY THE CONTRACTOR.
3. FIELD WIRING BY THE CONTRACTOR.

## SHEET KEYNOTES

| | |
|---|---|
| 1 | MEMBRANE SYSTEM SUPPLIER FURNISHED SOLENOID VALVES SHALL BE EQUIPPED WITH MANUAL POSITION OVERRIDE. |
| 2 | PIPE INSTALLED TUNING FORK TYPE SENSOR. |
| 3 | PLC-BASED VCP (WITH OPERATOR INTERFACE) SHALL BE FURNISHED AND PROGRAMMED BY THE MBR SYSTEM VENDOR. |
| 4 | FURNISH AND INSTALL SUNSHIELD. |
| 5 | MBR SYSTEM SUPPLIER FURNISHED EQUIPMENT SHIPPED LOOSE FOR CONTRACTOR INSTALLATION. |


J-U-B ENGINEERS, INC.
J-U-B ENGINEERS, INC.
392 E. Winchester St., Suite 300
Salt Lake City, UT 84107
Phone: 801.547.0393
www.jub.com

Subconsultant:
Stantec
Stantec
2890 E Cottonwood Pkwy
Suite 300, Salt Lake City, Ut
84121
Tel: +1.801.617.3200
www.stantec.com


AGENCY

REVIEW


REUSE OF DRAWINGS
J-U-B SHALL RETAIN ALL COMMON LAW, STATUTORY, COPYRIGHT AND OTHER RESERVED RIGHTS OF THESE DRAWINGS, AND THE SAME SHALL NOT BE REUSED WITHOUT J-U-B'S PRIOR WRITTEN CONSENT. ANY REUSE WITHOUT WRITTEN CONSENT BY J-U-B WILL BE AT CLIENTS SOLE RISK AND WITHOUT LIABILITY OR LEGAL EXPOSURE TO J-U-B.


| NO. | DESCRIPTION | BY (APP.) | DATE |
|---|---|---|---|
| A | ADDENDUM NO 2 | VBK (BH) | 04/06/2021 |

REVISION

SPANISH FORK & MAPELTON WRF
SPANISH FORK CITY CORPORATION

INSTRUMENTATION AND CONTROL
MBR BASIN NO 4 P&ID

FILE : 55-20-124_30I-604
JUB PROJ. # : 55-20-124
DRAWN BY: VBK
DESIGN BY: BH
CHECKED BY: SR
ONE INCH
AT FULL SIZE. IF NOT ONE INCH, SCALE ACCORDINGLY
LAST UPDATED: 6/30/2022

DRAWING:
30-I-604

SHEET: 540 OF 691


Plot Date:6/30/2022 8:11 PM Plotted By: Pinnaduwa-Hewage, Ranga
Date Created:4/28/2021 C:\PLANTCACHE\181301130_SPNSH FRK MAPLTN WRF DESIGN\PID DWG\55-20-124_30I-604.DWG

MBR BASIN NO 5 MASTER CONTROL

HMI

3 MBR SYSTEM MASTER VCP PLC

3 MBR SYSTEM RIO NO 3

FIELD

O/C RDY OPEN CLSD HS 1501 YL 1501 ZLO 1501 ZLC 1501

FLOW FI 1501

O/C RDY OPEN CLSD TORQ HS 1502 YL 1502 ZLO 1502 ZLC 1502 NAHH 1502

EMPTY FLOOD LALL 1505 LI 1505 LAHH 1505

LINE CHARGE CONFIRMED LAH 1504

SYS S/S HS 1504 | INFL FLOW SETPT FK 1504 | SYS RUN YL 1504A | SYS RDY YL 1504B | SYS GEN FAULT YA 1504 | SYS CLEAN MODE YL 1504C | SYS OFF MODE YL 1504D

TM PRESS PI 1510 WARN PAH 1510 ALARM PAHH 1510

LAH 1506 LAL 1506

O/C RDY OPEN CLSD TORQ HS 1515 YL 1515 ZLO 1515 ZLC 1515 NAHH 1515

HS 1520

I 1501 I 1502 I 1505 I 1504B I 1504A I 1515 I 1520

OP LEVEL ACHIEVED

SYS AIR STOP LEVEL

TO / FROM RAS FEED PUMP FLOW CONTROL 35-I-652(B)

TO / FROM AIR SCOUR BLOWER 35-I-656(B)

35-I-645(B) TO PERMEATE PUMP CONTROLLER

HIGH-HIGH TRANS-MEMBRANE (TM) PRESSURE

35-I-645(C) HIGH HIGH PERMEATE TURBIDITY

YL 1501 ZLO 1501 ZLC 1501 ZK 1501 ZI 1501

FIT 1501

HS 1502 YL 1502 ZLO 1502 ZLC 1502 NAHH 1502

LT 1505

HS 1503

HS 1504

LSH 1504

PIT 1510

LSH 1506 LSL 1506

HS 1515 YL 1515 ZLO 1515 ZLC 1515 NAHH 1515

HS 1520

SIS A

L/R HS 1501A O/C HS 1501B CLSD ZLC 1501 OPND ZLO 1501 PI 1501 ZIC 1501 OI

5 30-FCV-1501 VALVE ACTUATOR

INSTRUMENT AIR SUPPLY

LOR HS 1502A O/C HS 1502B CLSD ZLC 1502 OPND ZLO 1502 TORQ NAHH 1502 OI

30-MOG-1502 GATE ACTUATOR

SOV 1520 S

1"-PA (SS01)

TESTING AIR FROM MBR AIR SYSTEM

PIT 1510

16"-MP (SS02)

35-I-605(A)

TO / FROM MBR BASIN NO 5 PERMEATE PUMP

MOV 1504 M 1

LSH 1504 2

SOV 1503 S 1

30-ME-1503

TP 1504

LT 1505

10"-MP (SS02)

35-I-605(B)

RECIRCULATION FROM MBR BASIN NO 5 PERMATE PUMP

1"-PA (SS01)

PRIMING EDUCTOR AIR FROM PLANT AIR SYSTEM

TO ATM

24VDC

FIT 1501

TP 1501

TP 1502

LSH 1506

LSL 1506

FCV 1501 C

10"-AS (SS02)

35-I-611

FROM MBR SYSTEM AIR SCOUR BLOWERS

FE 1501

TM

30-I-607

CONTINUED TO RAS / WAS CHANNEL

20-I-605

CONTINUED FROM MBR INFLUENT CHANNEL

MOG 1502

MBR BASIN NO 5 SKID

MBR BASIN NO 5

480VAC

L/R HS 1515A O/C HS 1515B CLSD ZLC 1515 OPND ZLO 1515 TORQ NAHH 1515 OI

5 30-MOV-1515 VALVE ACTUATOR

MOV 1515 M

6"-DR (DI02)

05-I-602

TO PLANT DRAIN

## GENERAL SHEET NOTES

1. ALL EQUIPMENT, INSTRUMENTATION AND FIELD DEVICES SHOWN SHALL BE FURNISHED BY THE MBR SYSTEM SUPPLIER UNLESS SPECIFICALLY NOTED OTHERWISE. FIELD INSTALLATION BY CONTRACTOR.
2. VENDOR SKID SHALL INCLUDE INDICATED HEADER PIPING WITH FLANGED TIE IN POINTS. OFF-SKID PIPELINES FURNISHED AND INSTALLED BY THE CONTRACTOR.
3. FIELD WIRING BY THE CONTRACTOR.

## SHEET KEYNOTES

| | |
|---|---|
| 1 | MEMBRANE SYSTEM SUPPLIER FURNISHED SOLENOID VALVES SHALL BE EQUIPPED WITH MANUAL POSITION OVERRIDE. |
| 2 | PIPE INSTALLED TUNING FORK TYPE SENSOR. |
| 3 | PLC-BASED VCP (WITH OPERATOR INTERFACE) SHALL BE FURNISHED AND PROGRAMMED BY THE MBR SYSTEM VENDOR. |
| 4 | FURNISH AND INSTALL SUNSHIELD. |
| 5 | MBR SYSTEM SUPPLIER FURNISHED EQUIPMENT SHIPPED LOOSE FOR CONTRACTOR INSTALLATION. |


J-U-B ENGINEERS, INC.
J-U-B ENGINEERS, INC.
392 E. Winchester St., Suite 300
Salt Lake City, UT 84107
Phone: 801.547.0393
www.jub.com

Subconsultant:
Stantec
Stantec
2890 E Cottonwood Pkwy
Suite 300, Salt Lake City, Ut 84121
Tel: +1.801.617.3200
www.stantec.com


AGENCY

REVIEW


REUSE OF DRAWINGS
J-U-B SHALL RETAIN ALL COMMON LAW STATUTORY, COPYRIGHT AND OTHER RESERVED RIGHTS OF THESE DRAWINGS, AND THE SAME SHALL NOT BE REUSED WITHOUT J-U-B'S PRIOR WRITTEN CONSENT. ANY REUSE WITHOUT WRITTEN CONSENT BY J-U-B WILL BE AT CLIENTS SOLE RISK AND WITHOUT LIABILITY OR LEGAL EXPOSURE TO J-U-B.


| NO. | DESCRIPTION | BY (APP.) | DATE |
|---|---|---|---|
| A | ADDENDUM NO 2 | VBK (BH) | 04/06/2021 |

REVISION

SPANISH FORK & MAPELTON WRF
SPANISH FORK CITY CORPORATION

INSTRUMENTATION AND CONTROL
MBR BASIN NO 5 P&ID

FILE : 55-20-124_30I-605
JUB PROJ. # : 55-20-124
DRAWN BY: VBK
DESIGN BY: BH
CHECKED BY: SR
ONE INCH
AT FULL SIZE. IF NOT ONE INCH, SCALE ACCORDINGLY
LAST UPDATED: 6/30/2022

DRAWING:
30-I-605

SHEET: 541 OF 691


Plot Date:6/30/2022 8:11 PM Plotted By: Pinnaduwa-Hewage, Ranga
Date Created:4/28/2021 C:\PLANTCACHE\18130\139_SPNSH FRK MAPLTN WRF DESIGN\PID DWG\55-20-124_30I-605.DWG

MBR BASIN NO 6 MASTER CONTROL

HMI

3 MBR SYSTEM MASTER VCP PLC

3 MBR SYSTEM RIO NO 3

FIELD

O/C RDY OPEN CLSD ZLC HS 1601 YL 1601 ZLO 1601 ZLC 1601

FLOW FI 1601

O/C RDY OPEN CLSD TORQ HS 1602 YL 1602 ZLO 1602 ZLC 1602 NAHH 1602

EMPTY FLOOD LALL LT 1605 LI 1605 LAHH 1605

LINE CHARGE CONFIRMED LAH 1604

SYS S/S HS 1604 INFL FLOW SETPT FK 1604 SYS RUN YL 1604A SYS RDY YL 1604B SYS GEN FAULT YA 1604 SYS CLEAN MODE YL 1604C SYS OFF MODE YL 1604D

TM PRESS PI 1610 WARN PAH 1610 ALARM PAHH 1610

LAH LAL 1606 1606

O/C RDY OPEN CLSD TORQ HS YL ZLO ZLC NAHH 1615

HS 1620

I 1601 I 1602 I 1605 I 1604B I 1604A I 1615 I 1620

OP LEVEL ACHIEVED

SYS AIR STOP LEVEL

35-I-646(B) TO PERMEATE PUMP CONTROLLER

TO / FROM RAS FEED PUMP FLOW CONTROL 35-I-652(B)

HIGH-HIGH TRANS-MEMBRANE (TM) PRESSURE

TO / FROM AIR SCOUR BLOWER 35-I-656(B)

35-I-646(C) HIGH HIGH PERMEATE TURBIDITY

YL ZLO ZLC ZK ZI 1601

FIT 1601

HS YL ZLO ZLC NAHH 1602

LT 1605

HS 1603

HS 1604

LSH 1604

PIT 1610

LSH LSL 1606

HS YL ZLO ZLC NAHH 1615

HS 1620

SOV A S

L/R HS 1601A O/C HS 1601B CLSD ZLC 1601 OPND ZLO 1601 PI 1601 ZIC 1601 OI

INSTRUMENT AIR SUPPLY

5 30-FCV-1601 VALVE ACTUATOR

LOR HS 1602A O/C HS 1602B CLSD ZLC 1602 OPND ZLO 1602 TORQ NAHH 1602 OI

30-MOG-1602 GATE ACTUATOR

SOV 1620 S

1"-PA (SS01)

TESTING AIR FROM MBR AIR SYSTEM

SOV A S 5 4

PIT 1610

16"-MP (SS02)

35-I-606(A)

TO / FROM MBR BASIN NO 6 PERMEATE PUMP

MOV 1604 M 1

LSH 1604 2

SOV 1603 S 1

30-ME-1603

TP 1604

SOV A S 5 4

LT 1605

1"-PA (SS01)

PRIMING EDUCTOR AIR FROM PLANT AIR SYSTEM

TO ATM

24VDC

FIT 1601

TP 1601

TP 1602

10"-MP (SS02)

35-I-606(B)

RECIRCULATION FROM MBR BASIN NO 6 PERMEATE PUMP

LSH 1606

LSL 1606

FCV 1601 C 5

5 TM

FE 1601

10"-AS (SS02)

35-I-611

FROM MBR SYSTEM AIR SCOUR BLOWERS

30-I-607

CONTINUED TO RAS / WAS CHANNEL

20-I-605

CONTINUED FROM MBR INFLUENT CHANNEL

MOG 1602

MBR BASIN NO 6 SKID

MBR BASIN NO 6

480VAC

L/R HS 1615A O/C HS 1615B CLSD ZLC 1615 OPND ZLO 1615 TORQ NAHH 1615 OI

5 30-MOV-1615 VALVE ACTUATOR

5 M MOV 1615

6"-DR (DI02)

05-I-602

TO PLANT DRAIN

## GENERAL SHEET NOTES

1. ALL EQUIPMENT, INSTRUMENTATION AND FIELD DEVICES SHOWN SHALL BE FURNISHED BY THE MBR SYSTEM SUPPLIER UNLESS SPECIFICALLY NOTED OTHERWISE. FIELD INSTALLATION BY CONTRACTOR.
2. VENDOR SKID SHALL INCLUDE INDICATED HEADER PIPING WITH FLANGED TIE IN POINTS. OFF-SKID PIPELINES FURNISHED AND INSTALLED BY THE CONTRACTOR.
3. FIELD WIRING BY THE CONTRACTOR.

## SHEET KEYNOTES

| | |
|---|---|
| 1 | MEMBRANE SYSTEM SUPPLIER FURNISHED SOLENOID VALVES SHALL BE EQUIPPED WITH MANUAL POSITION OVERRIDE. |
| 2 | PIPE INSTALLED TUNING FORK TYPE SENSOR. |
| 3 | PLC-BASED VCP (WITH OPERATOR INTERFACE) SHALL BE FURNISHED AND PROGRAMMED BY THE MBR SYSTEM VENDOR. |
| 4 | FURNISH AND INSTALL SUNSHIELD. |
| 5 | MBR SYSTEM SUPPLIER FURNISHED EQUIPMENT SHIPPED LOOSE FOR CONTRACTOR INSTALLATION. |


J-U-B ENGINEERS, INC.
J-U-B ENGINEERS, INC.
392 E. Winchester St., Suite 300
Salt Lake City, UT 84107
Phone: 801.547.0393
www.jub.com

Subconsultant:
Stantec
Stantec
2890 E Cottonwood Pkwy
Suite 300, Salt Lake City, Ut
84121
Tel: +1.801.617.3200
www.stantec.com


AGENCY

REVIEW


REUSE OF DRAWINGS
J-U-B SHALL RETAIN ALL COMMON LAW, STATUTORY, COPYRIGHT AND OTHER RESERVED RIGHTS OF THESE DRAWINGS, AND THE SAME SHALL NOT BE REUSED WITHOUT J-U-B'S PRIOR WRITTEN CONSENT. ANY REUSE WITHOUT WRITTEN CONSENT BY J-U-B WILL BE AT CLIENTS SOLE RISK AND WITHOUT LIABILITY OR LEGAL EXPOSURE TO J-U-B.


| NO. | DESCRIPTION | BY (APP.) | DATE |
|---|---|---|---|
| A | ADDENDUM NO 2 | VBK (BH) | 04/06/2021 |

REVISION

SPANISH FORK & MAPELTON WRF
SPANISH FORK CITY CORPORATION

INSTRUMENTATION AND CONTROL
MBR BASIN NO 6 P&ID

FILE : 55-20-124_30I-606
JUB PROJ. # : 55-20-124
DRAWN BY: VBK
DESIGN BY: BH
CHECKED BY: SR
ONE INCH
AT FULL SIZE. IF NOT ONE INCH, SCALE ACCORDINGLY
LAST UPDATED: 6/30/2022

DRAWING:
30-I-606

SHEET: 542 OF 691


Plot Date:6/30/2022 8:11 PM Plotted By: Pinnaduwa-Hewage, Ranga
Date Created:4/28/2021 C:\PLANTCACHE\18130\130_SPNSH FRK MAPLTN WRF DESIGN\PID DWG\55-20-124_30I-606.DWG

WAS PUMP NO 1

KOI 2101 — S/S HS 2101 | RDY YL 2101A | SPD CTRL SK 2101 | SPD IND SI 2101 | FAIL YL 2101B | E-STOP YA 2101A | AMPS YA 2101B | LEAK II 2101 | MOTOR XA 2101 | TAH 2101

HMI

I 2101 — HS 2101 | YL 2101A | SK 2101 | SI 2101 | YL 2101B | YA 2101A | YA 2101B | II 2101 | XS 2101 | TAH 2101

BNR/MBR PLC

FIELD

HOR HS 2101A | OFF YL 2101C | RUN YL 2101D | DRIVE TRIP CIRCUIT I 2101 | VFD FAULT YA 2101C | TEMP TAH 2101 | LEAK XA 2101

START HMS 2101B | STOP HMS 2101C | RUN YL 2101A | AMPS II 2101 | SPD SI 2101 | MOTOR TAH 2101

SPD CTRL SC 2101 | VFD RESET HMS 2101D | VFD AVAIL YL 2101B | E-STOP YA 2101A | GEN FAULT YA 2101B | LEAK XA 2101

OI

VFD CP

30-VFD-2101
WAS PUMP NO 1 VFD

ELECTRICAL ROOM

WAS PUMP NO 1

KOI 2201 — S/S HS 2201 | RDY YL 2201 | SPD CTRL SK 2201 | SPD IND SI 2201 | FAIL YL 2201B | E-STOP YA 2201A | AMPS YA 2201B | LEAK II 2201 | MOTOR XA 2201 | TAH 2201

HMI

I 2201 — HS 2201 | YL 2201A | SK 2201 | SI 2201 | YL 2201B | YA 2201A | YA 2201B | II 2201 | XS 2201 | TAH 2201

BNR/MBR PLC

FIELD

HOR HS 2201B | OFF YL 2201C | RUN YL 2201D | DRIVE TRIP CIRCUIT I 2201 | VFD FAULT YA 2201C | TEMP TAH 2201 | LEAK XA 2201

START HMS 2201B | STOP HMS 2201C | RUN YL 2201A | AMPS II 2201 | SPD SI 2201 | MOTOR TAH 2201

SPD CTRL SC 2201 | VFD RESET HMS 2201D | VFD AVAIL YL 2201B | E-STOP YA 2201A | GEN FAULT YA 2201B | LEAK XA 2201

OI

VFD CP

30-VFD-2201
WAS PUMP NO 2 VFD

ELECTRICAL ROOM

LI 2005 — LIT 2005

LI 2009 — LIT 2009

120VAC → LIT 2009 (RADAR) → LE 2009

PI 2105 — PIT 2105

FLOW FI 2107 — FIT 2107

20-I-603 TO MBR INFLUENT CHANNEL

20-I-605 TO MBR INFLUENT CHANNEL

2"-UW (SS01)

3"x4"

PRV XXXX

4"-UW (SS01) → 55-I-601 FROM UTILITY WATER

6"-DR (DI02) — 30-VP-2110 → 05-I-602 TO PLANT DRAIN

30"-RAS (DI02) → 35-I-609(A) TO RAS PUMP NO 1

30-I-601 FROM MBR BASIN NO 1

30-I-602 FROM MBR BASIN NO 2

30-I-603 FROM MBR BASIN NO 3

E-STOP HS 2101B (1) 30-HS-2101 PUMP NO 1

E-STOP HS 2201B (1) 30-HS-2201 PUMP NO 2

20-I-603 6"-S (DI03) FROM MBR INFLUENT CHANNEL

20-I-605 6"-S (DI03) FROM MBR INFLUENT CHANNEL

TSH 2101 | M | XS 2101 — LEAK

30-P-2101 WAS PUMP NO 1

TSH 2201 | M | XS 2201 — LEAK

30-P-2201 WAS PUMP NO 2

30-SG-2110

4"-WAS (DI02)

ARV XXXX — 30-VC-2101 — 30-VP-2102

ARV XXXX — 30-VC-2201 — 30-VP-2202

PIT 2105

120VAC → FIT 2107

FE 2107

M M

6"-WAS (DI02) 4"x6" → 70-I-601 TO SOLIDS HOLDING TANK

30"-RAS (DI02) → 35-I-609(B) TO RAS PUMP NO 2

30-I-604 FROM MBR BASIN NO 4

30-I-605 FROM MBR BASIN NO 5

30-I-606 FROM MBR BASIN NO 6

30"-RAS (DI02) → 35-I-610 TO RAS PUMP NO 3

RAS / WAS CHANNEL

## SHEET KEYNOTES

| | |
|---|---|
| 1 | FURNISHED AND INSTALLED BY THE CONTRACTOR. |


J-U-B ENGINEERS, INC.

J-U-B ENGINEERS, INC.
392. E. Winchester St., Suite 300
Salt Lake City, UT 84107
Phone: 801.547.0393
www.jub.com

Subconsultant:

Stantec
2890 E Cottonwood Pkwy
Suite 300, Salt Lake City, Ut
84121
Tel: +1.801.617.3200
www.stantec.com


AGENCY

REVIEW


REUSE OF DRAWINGS
J-U-B SHALL RETAIN ALL COMMON LAW, STATUTORY, COPYRIGHT AND OTHER RESERVED RIGHTS OF THESE DRAWINGS, AND THE SAME SHALL NOT BE REUSED WITHOUT J-U-B'S PRIOR WRITTEN CONSENT. ANY REUSE WITHOUT WRITTEN CONSENT BY J-U-B WILL BE AT CLIENTS SOLE RISK AND WITHOUT LIABILITY OR LEGAL EXPOSURE TO J-U-B.


| NO. | DESCRIPTION | BY | APR. | DATE |
|---|---|---|---|---|
| | REVISION | | | |

SPANISH FORK & MAPELTON WRF
SPANISH FORK CITY CORPORATION

INSTRUMENTATION AND CONTROL
RAS / WAS CHANNEL P&ID

| | |
|---|---|
| FILE : | 55-20-124_30I-607 |
| JUB PROJ. # : | 55-20-124 |
| DRAWN BY: | VBK |
| DESIGN BY: | BH |
| CHECKED BY: | SR |

ONE INCH
AT FULL SIZE, IF NOT ONE INCH, SCALE ACCORDINGLY

LAST UPDATED: 6/30/2022

DRAWING:
30-I-607

SHEET: 543 OF 691


Plot Date:6/30/2022 8:11 PM, Plotted By:Pinnaduwa-Hewage, Ranga
Date Created:4/27/2021 C:\PLANTCAD\E1\81301139_SPNSH FRK MAPLTN WRF DESIGN\PID DWG\55-20-124_30I-607.DWG

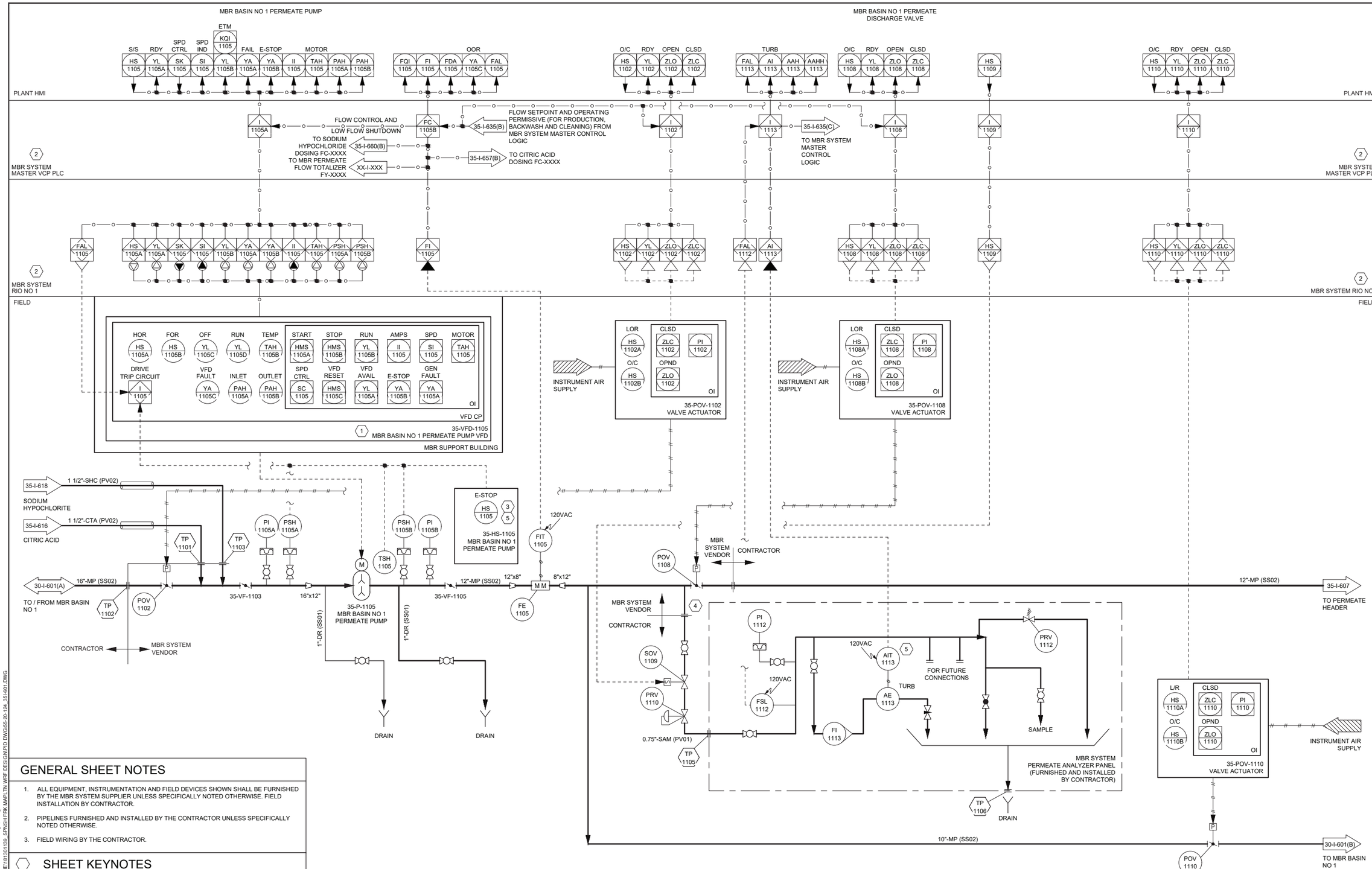


## GENERAL SHEET NOTES

1. ALL EQUIPMENT, INSTRUMENTATION AND FIELD DEVICES SHOWN SHALL BE FURNISHED BY THE MBR SYSTEM SUPPLIER UNLESS SPECIFICALLY NOTED OTHERWISE. FIELD INSTALLATION BY CONTRACTOR.
2. PIPELINES FURNISHED AND INSTALLED BY THE CONTRACTOR UNLESS SPECIFICALLY NOTED OTHERWISE.
3. FIELD WIRING BY THE CONTRACTOR.

## SHEET KEYNOTES

| | |
|---|---|
| 1 | FURNISH AND INSTALLED BY THE CONTRACTOR. |
| 2 | PLC-BASED VCP (WITH OPERATOR INTERFACE) SHALL BE FURNISHED AND PROGRAMMED BY THE MBR SYSTEM VENDOR. |
| 3 | LCS FIELD LOCATED NEXT TO PUMP. |
| 4 | SAMPLE PIPING ASSEMBLY SHALL INCLUDE 316SS QUILL SIZED TO SAMPLE FROM WITHIN CENTER OF FLOW STREAM. |
| 5 | VENDOR FURNISHED INSTALLED BY CONTRACTOR. |


J-U-B ENGINEERS, INC.
J-U-B ENGINEERS, INC.
392 E. Winchester St., Suite 300
Salt Lake City, UT 84107
Phone: 801.547.0393
www.jub.com

Subconsultant:
Stantec
Stantec
2890 E Cottonwood Pkwy
Suite 300, Salt Lake City, Ut 84121
Tel: +1.801.617.3200
www.stantec.com


AGENCY

REVIEW


REUSE OF DRAWINGS
J-U-B SHALL RETAIN ALL COMMON LAW STATUTORY, COPYRIGHT AND OTHER RESERVED RIGHTS OF THESE DRAWINGS, AND THE SAME SHALL NOT BE REUSED WITHOUT J-U-B'S PRIOR WRITTEN CONSENT. ANY REUSE WITHOUT WRITTEN CONSENT BY J-U-B WILL BE AT CLIENTS SOLE RISK AND WITHOUT LIABILITY OR LEGAL EXPOSURE TO J-U-B.


| NO. | DESCRIPTION | BY | APP'L | DATE |
|---|---|---|---|---|
| | REVISION | | | |

SPANISH FORK & MAPELTON WRF
SPANISH FORK CITY CORPORATION

INSTRUMENTATION AND CONTROL
MBR BASIN NO 1 PERMEATE PUMP P& ID

FILE : 55-20-124_35I-601
JUB PROJ. # : 55-20-124
DRAWN BY: VBK
DESIGN BY: BH
CHECKED BY: SR
ONE INCH
AT FULL SIZE. IF NOT ONE INCH, SCALE ACCORDINGLY
LAST UPDATED: 6/30/2022

DRAWING:
35-I-601

SHEET: 544 OF 691


Plot Date:6/30/2022 8:11 PM Plotted By: Pinnaduwa-Hewage, Ranga
Date Created:4/28/2021 C:\PLANTCAD\HE18130\139_SPNSH FRK MAPLTN WRF DESIGN\PID DWG\55-20-124_35I-601.DWG

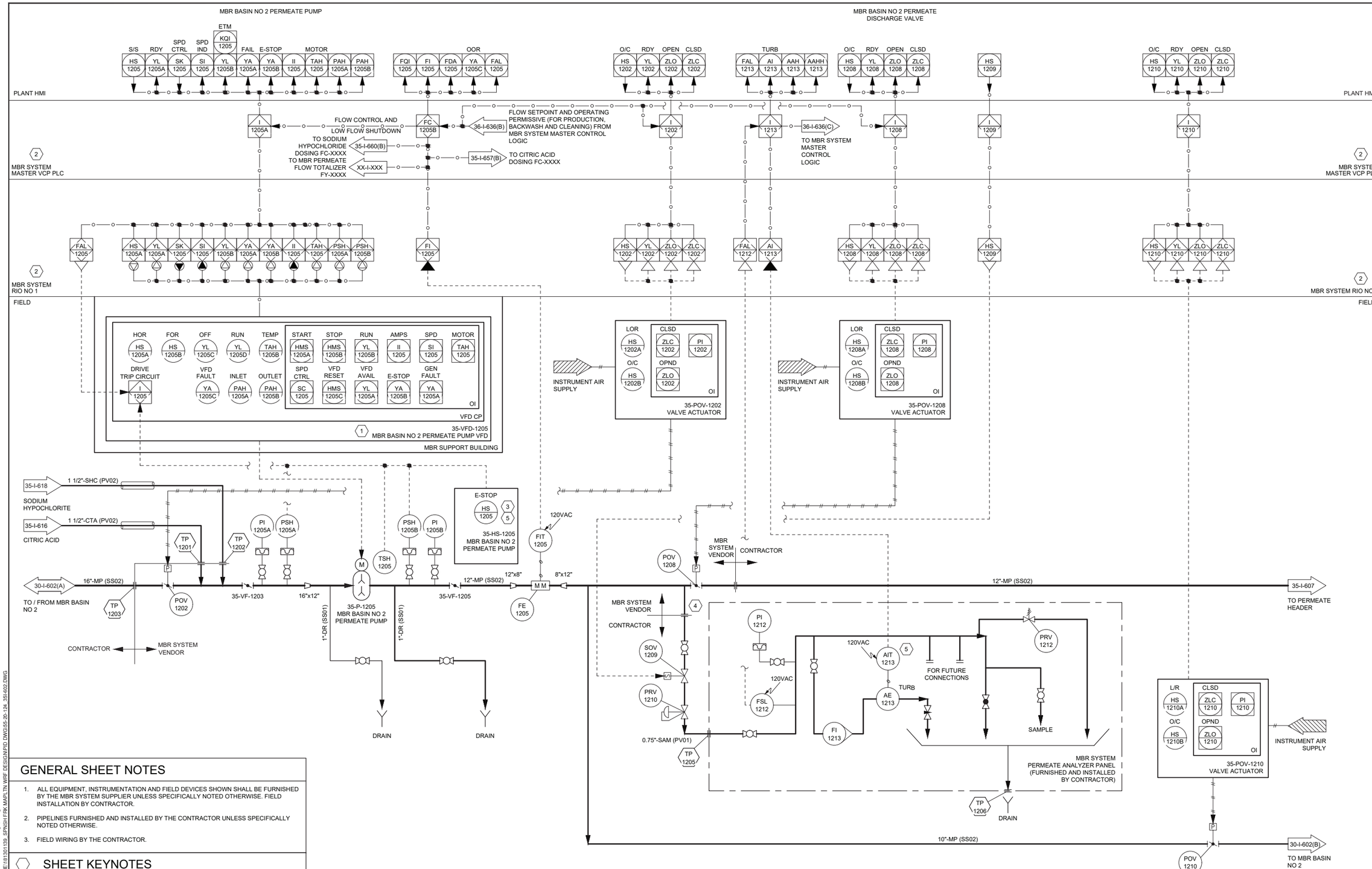


## GENERAL SHEET NOTES

1. ALL EQUIPMENT, INSTRUMENTATION AND FIELD DEVICES SHOWN SHALL BE FURNISHED BY THE MBR SYSTEM SUPPLIER UNLESS SPECIFICALLY NOTED OTHERWISE. FIELD INSTALLATION BY CONTRACTOR.
2. PIPELINES FURNISHED AND INSTALLED BY THE CONTRACTOR UNLESS SPECIFICALLY NOTED OTHERWISE.
3. FIELD WIRING BY THE CONTRACTOR.

## SHEET KEYNOTES

| | |
|---|---|
| 1 | FURNISH AND INSTALLED BY THE CONTRACTOR. |
| 2 | PLC-BASED VCP (WITH OPERATOR INTERFACE) SHALL BE FURNISHED AND PROGRAMMED BY THE MBR SYSTEM VENDOR. |
| 3 | LCS FIELD LOCATED NEXT TO PUMP. |
| 4 | SAMPLE PIPING ASSEMBLY SHALL INCLUDE 316SS QUILL SIZED TO SAMPLE FROM WITHIN CENTER OF FLOW STREAM. |
| 5 | VENDOR FURNISHED INSTALLED BY CONTRACTOR. |


J-U-B ENGINEERS, INC.
J-U-B ENGINEERS, INC.
392. E. Winchester St., Suite 300
Salt Lake City, UT 84107
Phone: 801.547.0393
www.jub.com

Subconsultant:
Stantec
Stantec
2890 E Cottonwood Pkwy
Suite 300, Salt Lake City, Ut 84121
Tel: +1.801.617.3200
www.stantec.com


AGENCY

REVIEW


REUSE OF DRAWINGS
J-U-B SHALL RETAIN ALL COMMON LAW, STATUTORY, COPYRIGHT AND OTHER RESERVED RIGHTS OF THESE DRAWINGS, AND THE SAME SHALL NOT BE REUSED WITHOUT J-U-B'S PRIOR WRITTEN CONSENT. ANY REUSE WITHOUT WRITTEN CONSENT BY J-U-B WILL BE AT CLIENT'S SOLE RISK AND WITHOUT LIABILITY OR LEGAL EXPOSURE TO J-U-B.


| NO. | DESCRIPTION | BY | APR | DATE |
|---|---|---|---|---|
| | REVISION | | | |

# SPANISH FORK & MAPELTON WRF
# SPANISH FORK CITY CORPORATION

## INSTRUMENTATION AND CONTROL
## MBR BASIN NO 2 PERMEATE PUMP P& ID

FILE : 55-20-124_35I-602
JUB PROJ. # : 55-20-124
DRAWN BY: VBK
DESIGN BY: BH
CHECKED BY: SR
ONE INCH
AT FULL SIZE, IF NOT ONE INCH, SCALE ACCORDINGLY
LAST UPDATED: 6/30/2022

DRAWING:
35-I-602

SHEET: 545 OF 691


Plot Date:6/30/2022 8:11 PM Plotted By: Pinnaduwa-Hewage, Ranga
Date Created:4/28/2021 C:\PLANTCACHE\181301139_SPNSH FRK MAPLTN WRF DESIGN\PID DWG\55-20-124_35I-602.DWG

MBR BASIN NO 3 PERMEATE PUMP

MBR BASIN NO 3 PERMEATE DISCHARGE VALVE

PLANT HMI

MBR SYSTEM MASTER VCP PLC

MBR SYSTEM RIO NO 2

FIELD

FLOW CONTROL AND LOW FLOW SHUTDOWN

TO SODIUM HYPOCHLORIDE DOSING FC-XXXX

TO MBR PERMEATE FLOW TOTALIZER FY-XXXX

FLOW SETPOINT AND OPERATING PERMISSIVE (FOR PRODUCTION, BACKWASH AND CLEANING) FROM MBR SYSTEM MASTER CONTROL LOGIC

TO CITRIC ACID DOSING FC-XXXX

TO MBR SYSTEM MASTER CONTROL LOGIC

35-VFD-1305
MBR BASIN NO 3 PERMEATE PUMP VFD

MBR SUPPORT BUILDING

35-POV-1302
VALVE ACTUATOR

35-POV-1308
VALVE ACTUATOR

INSTRUMENT AIR SUPPLY

SODIUM HYPOCHLORITE

CITRIC ACID

TO / FROM MBR BASIN NO 3

35-P-1305
MBR BASIN NO 3 PERMEATE PUMP

35-HS-1305
MBR BASIN NO 3 PERMEATE PUMP

35-VF-1303

35-VF-1305

DRAIN

MBR SYSTEM VENDOR

CONTRACTOR

120VAC

0.75"-SAM (PV01)

MBR SYSTEM PERMEATE ANALYZER PANEL (FURNISHED AND INSTALLED BY CONTRACTOR)

FOR FUTURE CONNECTIONS

SAMPLE

35-POV-1310
VALVE ACTUATOR

TO PERMEATE HEADER

TO MBR BASIN NO 3

## GENERAL SHEET NOTES

1. ALL EQUIPMENT, INSTRUMENTATION AND FIELD DEVICES SHOWN SHALL BE FURNISHED BY THE MBR SYSTEM SUPPLIER UNLESS SPECIFICALLY NOTED OTHERWISE. FIELD INSTALLATION BY CONTRACTOR.
2. PIPELINES FURNISHED AND INSTALLED BY THE CONTRACTOR UNLESS SPECIFICALLY NOTED OTHERWISE.
3. FIELD WIRING BY THE CONTRACTOR.

## SHEET KEYNOTES

| | |
|---|---|
| 1 | FURNISH AND INSTALLED BY THE CONTRACTOR. |
| 2 | PLC-BASED VCP (WITH OPERATOR INTERFACE) SHALL BE FURNISHED AND PROGRAMMED BY THE MBR SYSTEM VENDOR. |
| 3 | LCS FIELD LOCATED NEXT TO PUMP. |
| 4 | SAMPLE PIPING ASSEMBLY SHALL INCLUDE 316SS QUILL SIZED TO SAMPLE FROM WITHIN CENTER OF FLOW STREAM. |
| 5 | VENDOR FURNISHED INSTALLED BY CONTRACTOR. |


J-U-B ENGINEERS, INC.
J-U-B ENGINEERS, INC.
392 E. Winchester St., Suite 300
Salt Lake City, UT 84107
Phone: 801.547.0393
www.jub.com

Subconsultant:
Stantec
Stantec
2890 E Cottonwood Pkwy
Suite 300, Salt Lake City, Ut 84121
Tel: +1.801.617.3200
www.stantec.com


AGENCY

REVIEW


REUSE OF DRAWINGS
J-U-B SHALL RETAIN ALL COMMON LAW, STATUTORY, COPYRIGHT AND OTHER RESERVED RIGHTS OF THESE DRAWINGS, AND THE SAME SHALL NOT BE REUSED WITHOUT J-U-B'S PRIOR WRITTEN CONSENT. ANY REUSE WITHOUT WRITTEN CONSENT BY J-U-B WILL BE AT CLIENTS SOLE RISK AND WITHOUT LIABILITY OR LEGAL EXPOSURE TO J-U-B.


| NO. | DESCRIPTION | BY | APP'L | DATE |
|---|---|---|---|---|
| | REVISION | | | |

SPANISH FORK & MAPELTON WRF
SPANISH FORK CITY CORPORATION

INSTRUMENTATION AND CONTROL
MBR BASIN NO 3 PERMEATE PUMP P& ID

FILE : 55-20-124_35I-603
JUB PROJ. # : 55-20-124
DRAWN BY: VBK
DESIGN BY: BH
CHECKED BY: SR
ONE INCH
AT FULL SIZE. IF NOT ONE INCH, SCALE ACCORDINGLY
LAST UPDATED: 6/30/2022

DRAWING:
35-I-603

SHEET: 546 OF 691


Plot Date:6/30/2022 8:11 PM Plotted By: Pinnaduwa-Hewage, Ranga
Date Created:4/28/2021 C:\PLANTCAD\CHE18130\1139_SPNSH FRK MAPLTN WRF DESIGN\PID DWG\55-20-124_35I-603.DWG

MBR BASIN NO 4 PERMEATE PUMP

MBR BASIN NO 4 PERMEATE DISCHARGE VALVE

PLANT HMI

MBR SYSTEM MASTER VCP PLC

MBR SYSTEM RIO NO 2

FIELD

ETM KQI 1405 — S/S HS 1405 — RDY YL 1405A — SPD CTRL SK 1405 — SPD IND SI 1405 — FAIL YL 1405B — E-STOP YA 1405A — MOTOR YA 1405B — II 1405 — TAH 1405 — PAH 1405A — PAH 1405B

OOR — FQI 1405 — FI 1405 — FDA 1405 — YA 1405C — FAL 1405

O/C HS 1402 — RDY YL 1402 — OPEN ZLO 1402 — CLSD ZLC 1402

TURB — FAL 1413 — AI 1413 — AAH 1413 — AAHH 1413

O/C HS 1408 — RDY YL 1408 — OPEN ZLO 1408 — CLSD ZLC 1408

HS 1409

O/C HS 1410 — RDY YL 1410 — OPEN ZLO 1410 — CLSD ZLC 1410

I 1405A — FLOW CONTROL AND LOW FLOW SHUTDOWN — FC 1405B

35-I-636(B) — FLOW SETPOINT AND OPERATING PERMISSIVE (FOR PRODUCTION, BACKWASH AND CLEANING) FROM MBR SYSTEM MASTER CONTROL LOGIC

TO SODIUM HYPOCHLORITE DOSING FC-XXXX — 35-I-660(B)

TO MBR PERMEATE FLOW TOTALIZER FY-XXXX — XX-I-XXX

35-I-657(B) — TO CITRIC ACID DOSING FC-XXXX

I 1402 — I 1413 — 35-I-638(C) — TO MBR SYSTEM MASTER CONTROL LOGIC — I 1408 — I 1409 — I 1410

FAL 1405 — HS YL SK SI YL YA YA II TAH PSH PSH 1405A 1405A 1405 1405 1405B 1405A 1405B 1405 1405 1405A 1405B — FI 1405

HS YL ZLO ZLC 1402 — FAL AI 1412 1413 — HS YL ZLO ZLC 1408 — HS 1409 — HS YL ZLO ZLC 1410

HOR HS 1405A — FOR HS 1405B — OFF YL 1405C — RUN YL 1405D — TEMP TAH 1405B — START HMS 1405A — STOP HMS 1405B — RUN YL 1405B — AMPS II 1405 — SPD SI 1405 — MOTOR TAH 1405

DRIVE TRIP CIRCUIT I 1405 — VFD FAULT YA 1405C — INLET PAH 1405A — OUTLET PAH 1405B — SPD CTRL SC 1405 — VFD RESET HMS 1405C — VFD AVAIL YL 1405A — E-STOP YA 1405B — GEN FAULT YA 1405A — OI

VFD CP

1 35-VFD-1405 MBR BASIN NO 4 PERMEATE PUMP VFD

MBR SUPPORT BUILDING

INSTRUMENT AIR SUPPLY — LOR HS 1402A — O/C HS 1402B — CLSD ZLC 1402 — OPND ZLO 1402 — PI 1402 — OI — 35-POV-1402 VALVE ACTUATOR

INSTRUMENT AIR SUPPLY — LOR HS 1408A — O/C HS 1408B — CLSD ZLC 1408 — OPND ZLO 1408 — PI 1408 — OI — 35-POV-1408 VALVE ACTUATOR

35-I-618 — 1 1/2"-SHC (PV02) — SODIUM HYPOCHLORITE

35-I-616 — 1 1/2"-CTA (PV02) — CITRIC ACID

TP 1401 — TP 1402 — PI 1405A — PSH 1405A — PSH 1405B — PI 1405B — TSH 1405

E-STOP HS 1405 — 3 — 5 — 35-HS-1405 MBR BASIN NO 4 PERMEATE PUMP

120VAC — FIT 1405

30-I-604(A) — 16"-MP (SS02) — TO / FROM MBR BASIN NO 4

TP 1403 — POV 1402 — 35-VF-1403 — 16"x12" — M — 35-P-1405 MBR BASIN NO 4 PERMEATE PUMP — 1"-DR (SS01) — DRAIN

1"-DR (SS01) — DRAIN — 35-VF-1405 — 12"-MP (SS02 — 12"x8" — 8"x12" — M M — FE 1405

CONTRACTOR — MBR SYSTEM VENDOR

POV 1408 — MBR SYSTEM VENDOR — CONTRACTOR — 12"-MP (SS02) — 35-I-607 — TO PERMEATE HEADER

MBR SYSTEM VENDOR — 4 — CONTRACTOR

SOV 1409 — PRV 1410 — 0.75"-SAM (PV01) — TP 1405

PI 1412 — 120VAC — FSL 1412 — 120VAC — AIT 1413 — 5 — AE 1413 — TURB — FI 1413 — FOR FUTURE CONNECTIONS — PRV 1412 — SAMPLE

MBR SYSTEM PERMEATE ANALYZER PANEL (FURNISHED AND INSTALLED BY CONTRACTOR)

TP 1406 — DRAIN

L/R HS 1410A — O/C HS 1410B — CLSD ZLC 1410 — OPND ZLO 1410 — PI 1410 — OI — 35-POV-1410 VALVE ACTUATOR — INSTRUMENT AIR SUPPLY

10"-MP (SS02) — POV 1410 — 30-I-604(B) — TO MBR BASIN NO 4

## GENERAL SHEET NOTES

1. ALL EQUIPMENT, INSTRUMENTATION AND FIELD DEVICES SHOWN SHALL BE FURNISHED BY THE MBR SYSTEM SUPPLIER UNLESS SPECIFICALLY NOTED OTHERWISE. FIELD INSTALLATION BY CONTRACTOR.
2. PIPELINES FURNISHED AND INSTALLED BY THE CONTRACTOR UNLESS SPECIFICALLY NOTED OTHERWISE.
3. FIELD WIRING BY THE CONTRACTOR.

## SHEET KEYNOTES

| | |
|---|---|
| 1 | FURNISH AND INSTALLED BY THE CONTRACTOR. |
| 2 | PLC-BASED VCP (WITH OPERATOR INTERFACE) SHALL BE FURNISHED AND PROGRAMMED BY THE MBR SYSTEM VENDOR. |
| 3 | LCS FIELD LOCATED NEXT TO PUMP. |
| 4 | SAMPLE PIPING ASSEMBLY SHALL INCLUDE 316SS QUILL SIZED TO SAMPLE FROM WITHIN CENTER OF FLOW STREAM. |
| 5 | VENDOR FURNISHED INSTALLED BY CONTRACTOR. |

Plot Date:6/30/2022 8:11 PM Plotted By: Pinnaduwa-Hewage, Ranga
Date Created:4/28/2021 C:\PLANTCAD\HE18130\139_SPNSH FRK MAPLTN WRF DESIGN\PID DWG\55-20-124_35I-604.DWG


J-U-B ENGINEERS, INC.
J-U-B ENGINEERS, INC.
392 E. Winchester St., Suite 300
Salt Lake City, UT 84107
Phone: 801.547.0393
www.jub.com

Subconsultant:
Stantec
Stantec
2890 E Cottonwood Pkwy
Suite 300, Salt Lake City, Ut 84121
Tel: +1.801.617.3200
www.stantec.com


AGENCY

REVIEW


REUSE OF DRAWINGS
J-U-B SHALL RETAIN ALL COMMON LAW, STATUTORY, COPYRIGHT AND OTHER RESERVED RIGHTS OF THESE DRAWINGS, AND THE SAME SHALL NOT BE REUSED WITHOUT J-U-B'S PRIOR WRITTEN CONSENT. ANY REUSE WITHOUT WRITTEN CONSENT BY J-U-B WILL BE AT CLIENTS SOLE RISK AND WITHOUT LIABILITY OR LEGAL EXPOSURE TO J-U-B.


| NO. | DESCRIPTION | BY | APR. | DATE |
|---|---|---|---|---|
| | REVISION | | | |

SPANISH FORK & MAPELTON WRF
SPANISH FORK CITY CORPORATION

INSTRUMENTATION AND CONTROL
MBR BASIN NO 4 PERMEATE PUMP P& ID

FILE : 55-20-124_35I-604
JUB PROJ. # : 55-20-124
DRAWN BY: VBK
DESIGN BY: BH
CHECKED BY: SR
ONE INCH
AT FULL SIZE. IF NOT ONE INCH, SCALE ACCORDINGLY
LAST UPDATED: 6/30/2022

DRAWING:
35-I-604

SHEET: 547 OF 691

MBR BASIN NO 5 PERMEATE PUMP

MBR BASIN NO 5 PERMEATE DISCHARGE VALVE

PLANT HMI

MBR SYSTEM MASTER VCP PLC

MBR SYSTEM RIO NO 3

FIELD

FLOW CONTROL AND LOW FLOW SHUTDOWN

TO SODIUM HYPOCHLORIDE DOSING FC-XXXX

TO MBR PERMEATE FLOW TOTALIZER FY-XXXX

FLOW SETPOINT AND OPERATING PERMISSIVE (FOR PRODUCTION, BACKWASH AND CLEANING) FROM MBR SYSTEM MASTER CONTROL LOGIC

TO CITRIC ACID DOSING FC-XXXX

TO MBR SYSTEM MASTER CONTROL LOGIC

35-VFD-1505
MBR BASIN NO 5 PERMEATE PUMP VFD

MBR SUPPORT BUILDING

35-POV-1502
VALVE ACTUATOR

35-POV-1508
VALVE ACTUATOR

35-POV-1510
VALVE ACTUATOR

INSTRUMENT AIR SUPPLY

35-I-618
SODIUM HYPOCHLORITE

X"-SHC (PV02)

35-I-616
CITRIC ACID

1 1/2"-CTA (PV02)

30-I-605(A)
TO / FROM MBR BASIN NO 5

16"-MP (SS02)

35-VF-1503

16"x12"

35-P-1505
MBR BASIN NO 5 PERMEATE PUMP

1"-DR (SS01)

35-VF-1505

12"-MP (SS02)

12"x8"

8"x12"

E-STOP

35-HS-1505
MBR BASIN NO 5 PERMEATE PUMP

120VAC

MBR SYSTEM VENDOR

CONTRACTOR

0.75"-SAM (PV01)

FOR FUTURE CONNECTIONS

MBR SYSTEM PERMEATE ANALYZER PANEL (FURNISHED AND INSTALLED BY CONTRACTOR)

SAMPLE

DRAIN

10"-MP (SS02)

35-I-607
TO PERMEATE HEADER

30-I-605(B)
TO MBR BASIN NO 5

## GENERAL SHEET NOTES

1. ALL EQUIPMENT, INSTRUMENTATION AND FIELD DEVICES SHOWN SHALL BE FURNISHED BY THE MBR SYSTEM SUPPLIER UNLESS SPECIFICALLY NOTED OTHERWISE. FIELD INSTALLATION BY CONTRACTOR.
2. PIPELINES FURNISHED AND INSTALLED BY THE CONTRACTOR UNLESS SPECIFICALLY NOTED OTHERWISE.
3. FIELD WIRING BY THE CONTRACTOR.

## SHEET KEYNOTES

| | |
|---|---|
| 1 | FURNISH AND INSTALLED BY THE CONTRACTOR. |
| 2 | PLC-BASED VCP (WITH OPERATOR INTERFACE) SHALL BE FURNISHED AND PROGRAMMED BY THE MBR SYSTEM VENDOR. |
| 3 | LCS FIELD LOCATED NEXT TO PUMP. |
| 4 | SAMPLE PIPING ASSEMBLY SHALL INCLUDE 316SS QUILL SIZED TO SAMPLE FROM WITHIN CENTER OF FLOW STREAM. |
| 5 | VENDOR FURNISHED INSTALLED BY CONTRACTOR. |

REUSE OF DRAWINGS
J-U-B SHALL RETAIN ALL COMMON LAW STATUTORY, COPYRIGHT AND OTHER RESERVED RIGHTS OF THESE DRAWINGS, AND THE SAME SHALL NOT BE REUSED WITHOUT J-U-B'S PRIOR WRITTEN CONSENT. ANY REUSE WITHOUT WRITTEN CONSENT BY J-U-B WILL BE AT CLIENTS SOLE RISK AND WITHOUT LIABILITY OR LEGAL EXPOSURE TO J-U-B.

| NO. | DESCRIPTION | BY | APR. | DATE |
|---|---|---|---|---|
| | REVISION | | | |

J-U-B ENGINEERS, INC.
392 E. Winchester St., Suite 300
Salt Lake City, UT 84107
Phone: 801.547.0393
www.jub.com

Subconsultant:
Stantec
Stantec
2890 E Cottonwood Pkwy
Suite 300, Salt Lake City, Ut 84121
Tel: +1.801.617.3200
www.stantec.com

AGENCY

REVIEW

SPANISH FORK & MAPELTON WRF
SPANISH FORK CITY CORPORATION

INSTRUMENTATION AND CONTROL
MBR BASIN NO 5 PERMEATE PUMP P& ID

FILE : 55-20-124_35I-605
JUB PROJ. # : 55-20-124
DRAWN BY: VBK
DESIGN BY: BH
CHECKED BY: SR
ONE INCH
AT FULL SIZE, IF NOT ONE INCH, SCALE ACCORDINGLY
LAST UPDATED: 6/30/2022

DRAWING:
35-I-605

SHEET: 548 OF 691

Plot Date:6/30/2022 8:11 PM Plotted By: Pinnaduwa-Hewage, Ranga
Date Created:4/28/2021 C:\PLANTCACHE\181301139_SPNSH FRK MAPLTN WRF DESIGN\PID DWG\55-20-124_35I-605.DWG

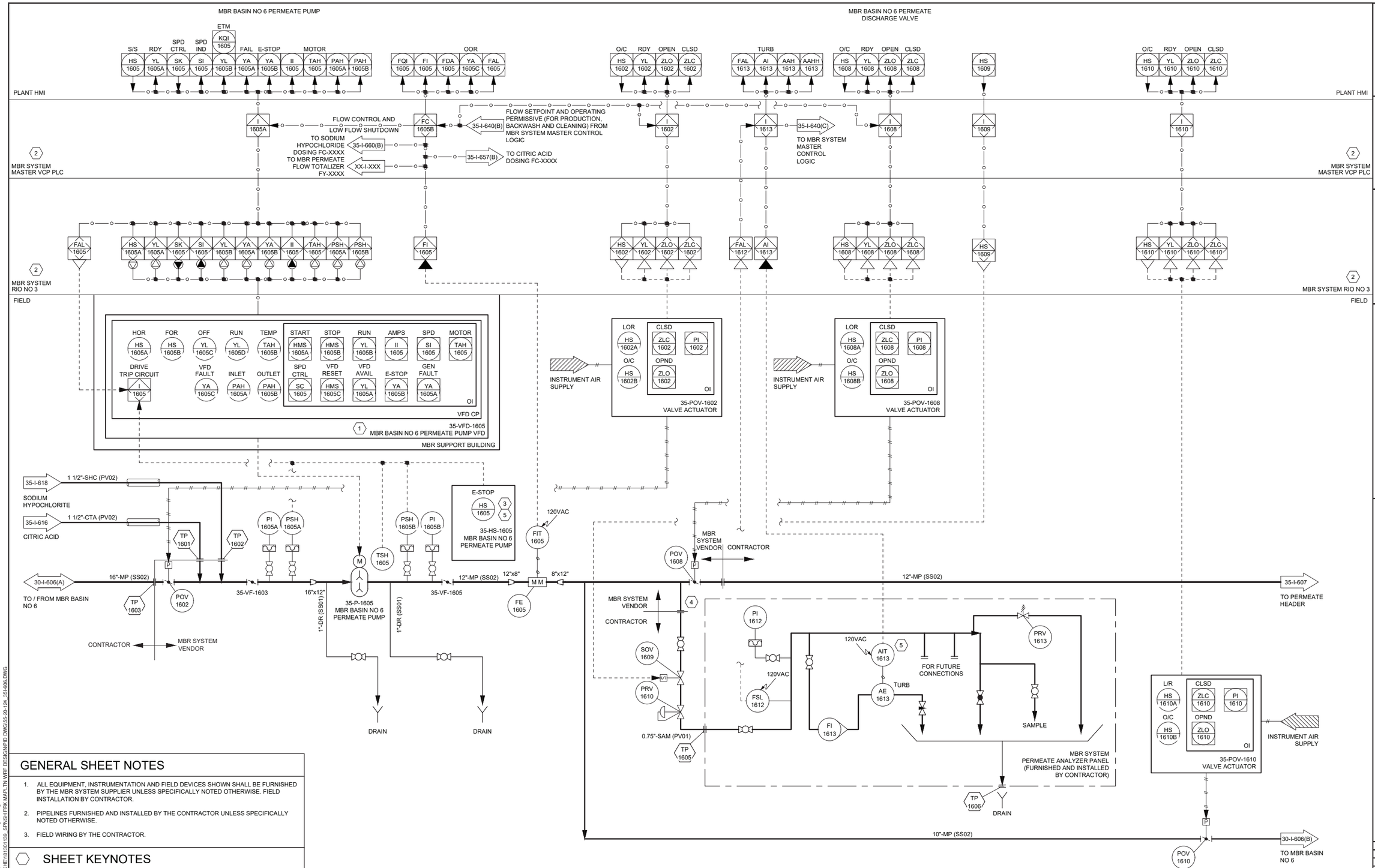


## GENERAL SHEET NOTES

1. ALL EQUIPMENT, INSTRUMENTATION AND FIELD DEVICES SHOWN SHALL BE FURNISHED BY THE MBR SYSTEM SUPPLIER UNLESS SPECIFICALLY NOTED OTHERWISE. FIELD INSTALLATION BY CONTRACTOR.
2. PIPELINES FURNISHED AND INSTALLED BY THE CONTRACTOR UNLESS SPECIFICALLY NOTED OTHERWISE.
3. FIELD WIRING BY THE CONTRACTOR.

## SHEET KEYNOTES

| | |
|---|---|
| 1 | FURNISH AND INSTALLED BY THE CONTRACTOR. |
| 2 | PLC-BASED VCP (WITH OPERATOR INTERFACE) SHALL BE FURNISHED AND PROGRAMMED BY THE MBR SYSTEM VENDOR. |
| 3 | LCS FIELD LOCATED NEXT TO PUMP. |
| 4 | SAMPLE PIPING ASSEMBLY SHALL INCLUDE 316SS QUILL SIZED TO SAMPLE FROM WITHIN CENTER OF FLOW STREAM. |
| 5 | VENDOR FURNISHED INSTALLED BY CONTRACTOR. |

Plot Date:6/30/2022 8:11 PM Plotted By: Pinnadwa-Hawagin, Ranga
Date Created:4/28/2021 C:\PLANTCACHE\181301139_SPNSH FRK MAPLTN WRF DESIGN\PID DWG\55-20-124_35I-606.DWG

J-U-B ENGINEERS, INC.
J-U-B ENGINEERS, INC.
392 E. Winchester St., Suite 300
Salt Lake City, UT 84107
Phone: 801.547.0393
www.jub.com

Subconsultant:
Stantec
Stantec
2890 E Cottonwood Pkwy
Suite 300, Salt Lake City, Ut 84121
Tel: +1.801.617.3200
www.stantec.com

AGENCY

REVIEW

REUSE OF DRAWINGS
J-U-B SHALL RETAIN ALL COMMON LAW, STATUTORY, COPYRIGHT AND OTHER RESERVED RIGHTS OF THESE DRAWINGS, AND THE SAME SHALL NOT BE REUSED WITHOUT J-U-B'S PRIOR WRITTEN CONSENT. ANY REUSE WITHOUT WRITTEN CONSENT BY J-U-B WILL BE AT CLIENTS SOLE RISK AND WITHOUT LIABILITY OR LEGAL EXPOSURE TO J-U-B.

| NO. | DESCRIPTION | BY | APR. | DATE |
|---|---|---|---|---|
| | REVISION | | | |

SPANISH FORK & MAPELTON WRF
SPANISH FORK CITY CORPORATION

INSTRUMENTATION AND CONTROL
MBR BASIN NO 6 PERMEATE PUMP P& ID

FILE : 55-20-124_35I-606
JUB PROJ. # : 55-20-124
DRAWN BY: VBK
DESIGN BY: BH
CHECKED BY: SR
ONE INCH
AT FULL SIZE, IF NOT ONE INCH, SCALE ACCORDINGLY
LAST UPDATED: 6/30/2022

DRAWING:
35-I-606

SHEET: 549 OF 691

## SHEET KEYNOTES

| | |
|---|---|
| 4 | SAMPLE PIPING ASSEMBLY SHALL INCLUDE 316SS QUILL SIZED TO SAMPLE FROM WITHIN CENTER OF FLOW STREAM. |
| 5 | VENDOR FURNISHED INSTALLED BY CONTRACTOR. |

PLANT HMI

PLANT MASTER PLC

FIELD

TI 4005 | PI 4005 | TIT 4005 | PIT 4005

HS 4101 | YL 4101 | ZLO 4101 | ZLC 4101 | NAHH 4101 | ZK 4101 | ZI 4101 | FI 4101 | FIT 4101

HS 4201 | YL 4201 | ZLO 4201 | ZLC 4201 | NAHH 4201 | ZK 4201 | ZI 4201 | FI 4201 | FIT 4201

I 4101 — 50-I-601(A)

I 4201 — 50-I-601(B)

480VAC

LOR | HS 4101A | O/C | HS 4101B | CLSD | ZLC 4101 | NAHH 4101 | OPND | ZLO 4101 | ZIC 4101 | OI

35-MOV-4101
VALVE ACTUATOR

480VAC

LOR | HS 4201A | O/C | HS 4201B | CLSD | ZLC 4201 | NAHH 4201 | OPND | ZLO 4201 | ZIC 4201 | OI

35-MOV-4201
VALVE ACTUATOR

120VAC — FIT 4101

M FCV 4101

FUTURE MP CONNECTION

M M — FE 4101

24"-MP (SS02) — 24"-MP (DI02) — 50-I-601 (A)

35-VF-1101

TO UV CHANNEL 1

120VAC — FIT 4201

M FCV 4201

M M — FE 4201

24"-MP (SS02) — 24"-MP (DI02) — 50-I-601 (B)

35-VF-1201

TO UV CHANNEL 2

PRV 4006

4

3/4"-SAM (PV01) — 35-I-608

TO COMBINED MBR PERMEATE WET PANEL

5

TIT 4005 | TE 4005 | PIT 4005

24"-MP (SS02)

35-I-601 — 12"-MP (SS02) — FROM MBR BASIN NO 1 PERMEATE PUMP

35-I-602 — 12"-MP (SS02) — FROM MBR BASIN NO 2 PERMEATE PUMP

35-I-603 — 12"-MP (SS02) — FROM MBR BASIN NO 3 PERMEATE PUMP

35-I-604 — 12"-MP (SS02) — FROM MBR BASIN NO 4 PERMEATE PUMP

35-I-605 — 12"-MP (SS02) — FROM MBR BASIN NO 5 PERMEATE PUMP

35-I-606 — 12"-MP (SS02) — FROM MBR BASIN NO 6 PERMEATE PUMP


J-U-B ENGINEERS, INC.

J-U-B ENGINEERS, INC.
392 E. Winchester St., Suite 300
Salt Lake City, UT 84107
Phone: 801.547.0393
www.jub.com

Subconsultant:

Stantec
Stantec
2890 E Cottonwood Pkwy
Suite 300, Salt Lake City, Ut
84121
Tel: +1.801.617.3200
www.stantec.com


AGENCY

REVIEW


REUSE OF DRAWINGS
J-U-B SHALL RETAIN ALL COMMON LAW, STATUTORY, COPYRIGHT AND OTHER RESERVED RIGHTS OF THESE DRAWINGS, AND THE SAME SHALL NOT BE REUSED WITHOUT J-U-B'S PRIOR WRITTEN CONSENT. ANY REUSE WITHOUT WRITTEN CONSENT BY J-U-B WILL BE AT CLIENTS SOLE RISK AND WITHOUT LIABILITY OR LEGAL EXPOSURE TO J-U-B.


| NO. | DESCRIPTION | BY | APP. | DATE |
|---|---|---|---|---|
| | REVISION | | | |

SPANISH FORK & MAPELTON WRF
SPANISH FORK CITY CORPORATION

INSTRUMENTATION AND CONTROL
MBR COMBINED PERMEATE HEADER P&ID

FILE : 55-20-124_35I-607
JUB PROJ. # : 55-20-124
DRAWN BY: VBK
DESIGN BY: BH
CHECKED BY: SR

ONE INCH
AT FULL SIZE, IF NOT ONE INCH, SCALE ACCORDINGLY

LAST UPDATED: 6/30/2022

DRAWING:
35-I-607

SHEET: 550 OF 691


Plot Date:6/30/2022 8:11 PM Plotted By: Pinnaduwa-Hewage, Ranga
Date Created:5/10/2021 C:\PLANTCACHE\181301139_SPNISH FRK MAPLTN WRF DESIGN\PID DWG\55-20-124_35I-607.DWG

LOW FLOW
FAL 4010
NH3
AI 4013
NO3
AI 4015
TSS
AI 4017
UVT
AI 4019
HMI
HMI
I 4019
50-I-601
FAL 4010
AI 4013
AI 4015
AI 4017
AI 4019
BNR/MBR PLC
BNR/MBR PLC
FIELD
FIELD
PRV 4020
PI 4010
24VDC
FSL 4010
120VAC
NH3
AIT 4013
AE 4013
FI 4013
120VAC
NO3
AIT 4015
AE 4015
FI 4015
120VAC
TSS
AIT 4017
AE 4017
FI 4017
120VAC
UVT
AIT 4019
AE 4019
FI 4019
SAMPLE
35-I-607
FROM MBR SYSTEM COMBINED PERMEATE
3/4"-SAM (PV01)
6
MBR SYSTEM COMBINED PERMEATE ANALYZER PANEL
DRAIN

## SHEET KEYNOTES

| | |
|---|---|
| 6 | REFER TO DETAIL SHEET FOR INSTALLATION DETAIL. |


J-U-B ENGINEERS, INC.
J-U-B ENGINEERS, INC.
392. E. Winchester St., Suite 300
Salt Lake City, UT 84107
Phone: 801.547.0393
www.jub.com

Subconsultant:
Stantec
Stantec
2890 E Cottonwood Pkwy
Suite 300, Salt Lake City, Ut 84121
Tel: +1.801.617.3200
www.stantec.com


AGENCY

REVIEW


REUSE OF DRAWINGS
J-U-B SHALL RETAIN ALL COMMON LAW, STATUTORY, COPYRIGHT AND OTHER RESERVED RIGHTS OF THESE DRAWINGS, AND THE SAME SHALL NOT BE REUSED WITHOUT J-U-B'S PRIOR WRITTEN CONSENT. ANY REUSE WITHOUT WRITTEN CONSENT BY J-U-B WILL BE AT CLIENTS SOLE RISK AND WITHOUT LIABILITY OR LEGAL EXPOSURE TO J-U-B.


| NO. | DESCRIPTION | BY | APP. | DATE |
|---|---|---|---|---|
| | REVISION | | | |

SPANISH FORK & MAPELTON WRF
SPANISH FORK CITY CORPORATION

INSTRUMENTATION AND CONTROL
MBR COMBINED PERMEATE WET PANEL P&ID

FILE : 55-20-124_35I-608
JUB PROJ. # : 55-20-124
DRAWN BY: VBK
DESIGN BY: BH
CHECKED BY: SR
ONE INCH
AT FULL SIZE, IF NOT ONE INCH, SCALE ACCORDINGLY
LAST UPDATED: 6/30/2022

DRAWING:
35-I-608

SHEET: 551 OF 691


Plot Date:6/30/2022 8:12 PM Plotted By: Pirnadiwa-Hewage, Ranga
Date Created:5/26/2021 C:\PLANTCAD\HE1181301\39_SPNSH FRK MAPLTN WRF DESIGN\PID DWG\55-20-124_35I-608.DWG

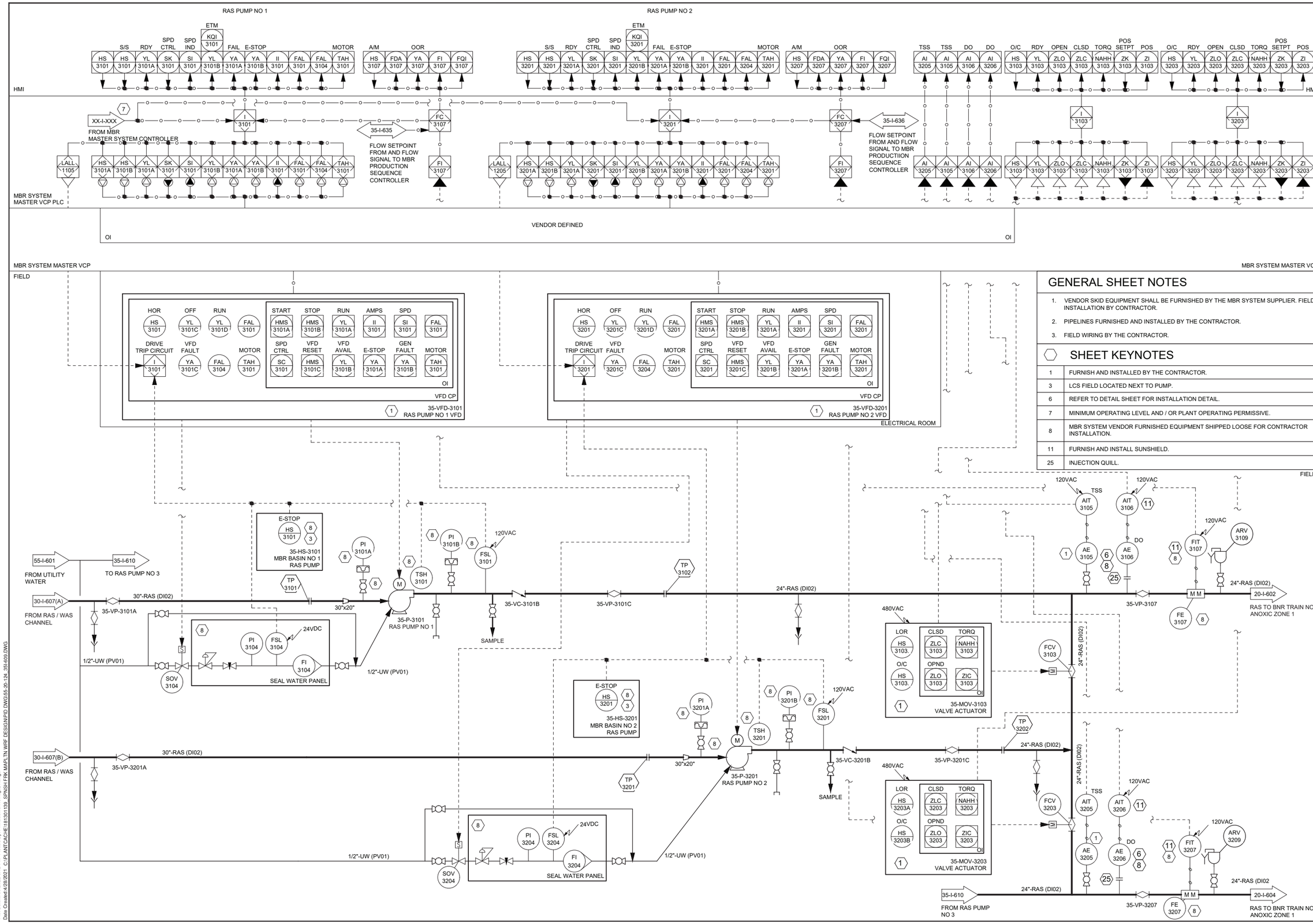


## GENERAL SHEET NOTES

1. VENDOR SKID EQUIPMENT SHALL BE FURNISHED BY THE MBR SYSTEM SUPPLIER. FIELD INSTALLATION BY CONTRACTOR.
2. PIPELINES FURNISHED AND INSTALLED BY THE CONTRACTOR.
3. FIELD WIRING BY THE CONTRACTOR.

## SHEET KEYNOTES

| | |
|---|---|
| 1 | FURNISH AND INSTALLED BY THE CONTRACTOR. |
| 3 | LCS FIELD LOCATED NEXT TO PUMP. |
| 6 | REFER TO DETAIL SHEET FOR INSTALLATION DETAIL. |
| 7 | MINIMUM OPERATING LEVEL AND / OR PLANT OPERATING PERMISSIVE. |
| 8 | MBR SYSTEM VENDOR FURNISHED EQUIPMENT SHIPPED LOOSE FOR CONTRACTOR INSTALLATION. |
| 11 | FURNISH AND INSTALL SUNSHIELD. |
| 25 | INJECTION QUILL. |


J-U-B ENGINEERS, INC.
J-U-B ENGINEERS, INC.
392. E. Winchester St., Suite 300
Salt Lake City, UT 84107
Phone: 801.547.0393
www.jub.com

Subconsultant:
Stantec
Stantec
2890 E Cottonwood Pkwy
Suite 300, Salt Lake City, Ut 84121
Tel: +1.801.617.3200
www.stantec.com


AGENCY

REVIEW


REUSE OF DRAWINGS
J-U-B SHALL RETAIN ALL COMMON LAW, STATUTORY, COPYRIGHT AND OTHER RESERVED RIGHTS OF THESE DRAWINGS, AND THE SAME SHALL NOT BE REUSED WITHOUT J-U-B'S PRIOR WRITTEN CONSENT. ANY REUSE WITHOUT WRITTEN CONSENT BY J-U-B WILL BE AT CLIENT'S SOLE RISK AND WITHOUT LIABILITY OR LEGAL EXPOSURE TO J-U-B.


| NO. | DESCRIPTION | BY | APR | DATE |
|---|---|---|---|---|
| A | ADDENDUM NO 2 | VBK | BH | 04/06/2021 |

# SPANISH FORK & MAPELTON WRF
# SPANISH FORK CITY CORPORATION

## INSTRUMENTATION AND CONTROL
## RAS PUMPS - I P&ID

FILE : 55-20-124_35I-609
JUB PROJ. # : 55-20-124
DRAWN BY: VBK
DESIGN BY: BH
CHECKED BY: SR
ONE INCH
AT FULL SIZE, IF NOT ONE INCH, SCALE ACCORDINGLY
LAST UPDATED: 6/30/2022

DRAWING:
35-I-609




Plot Date:6/30/2022 8:12 PM Plotted By: Pinnaduwa-Hewage, Ranga
Date Created:4/28/2021 C:\PLANTCACHE\181301139_SPNSH FRK MAPLTN WRF DESIGN\PID DWG\55-20-124_35I-609.DWG

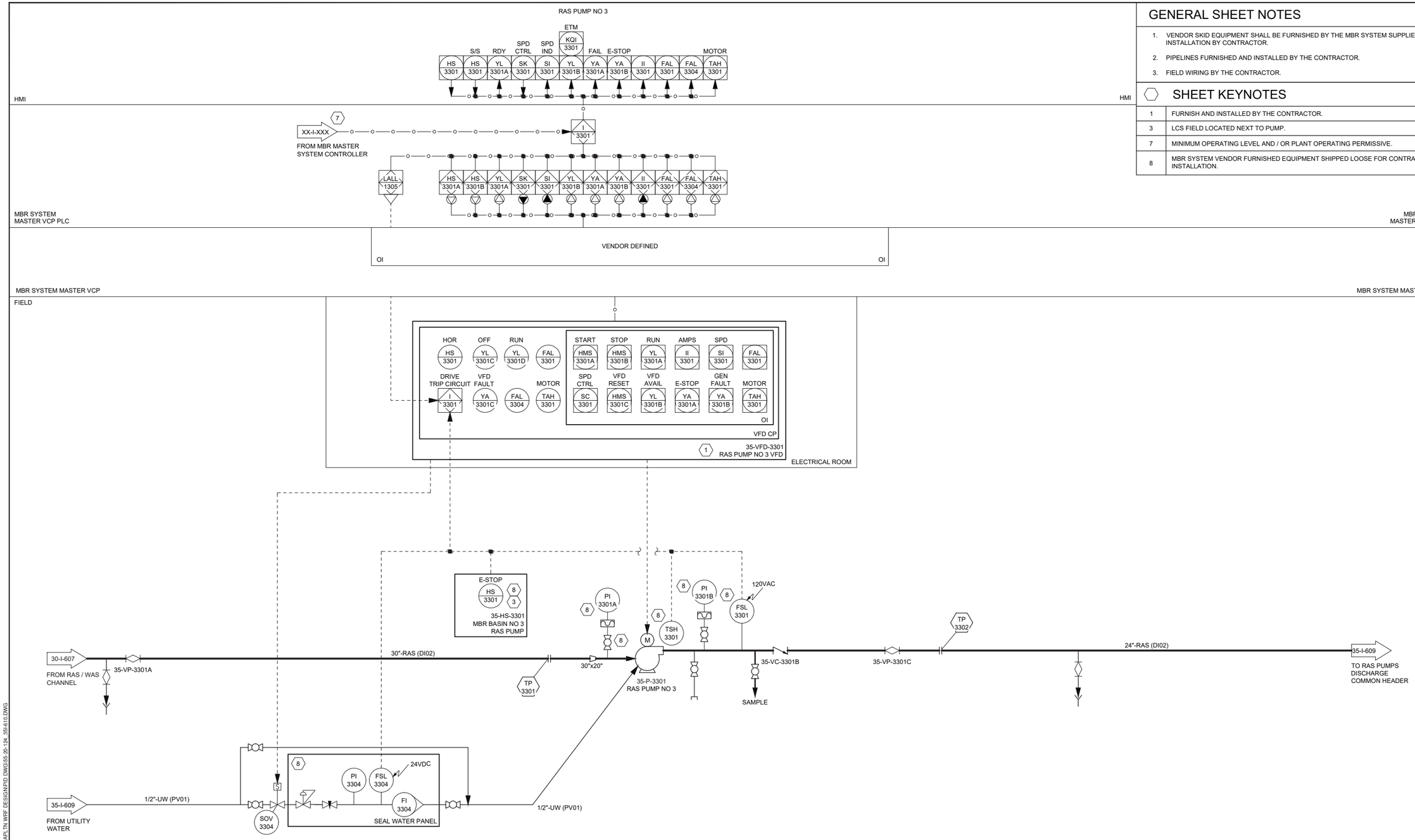


## GENERAL SHEET NOTES

1. VENDOR SKID EQUIPMENT SHALL BE FURNISHED BY THE MBR SYSTEM SUPPLIER. FIELD INSTALLATION BY CONTRACTOR.
2. PIPELINES FURNISHED AND INSTALLED BY THE CONTRACTOR.
3. FIELD WIRING BY THE CONTRACTOR.

## SHEET KEYNOTES

| | |
|---|---|
| 1 | FURNISH AND INSTALLED BY THE CONTRACTOR. |
| 3 | LCS FIELD LOCATED NEXT TO PUMP. |
| 7 | MINIMUM OPERATING LEVEL AND / OR PLANT OPERATING PERMISSIVE. |
| 8 | MBR SYSTEM VENDOR FURNISHED EQUIPMENT SHIPPED LOOSE FOR CONTRACTOR INSTALLATION. |


J-U-B ENGINEERS, INC.

J-U-B ENGINEERS, INC.
392. E. Winchester St., Suite 300
Salt Lake City, UT 84107
Phone: 801.547.0393
www.jub.com

Subconsultant:

Stantec
Stantec
2890 E Cottonwood Pkwy
Suite 300, Salt Lake City, Ut 84121
Tel: +1.801.617.3200
www.stantec.com


AGENCY

REVIEW


REUSE OF DRAWINGS
J-U-B SHALL RETAIN ALL COMMON LAW, STATUTORY, COPYRIGHT AND OTHER RESERVED RIGHTS OF THESE DRAWINGS, AND THE SAME SHALL NOT BE REUSED WITHOUT J-U-B'S PRIOR WRITTEN CONSENT. ANY REUSE WITHOUT WRITTEN CONSENT BY J-U-B WILL BE AT CLIENTS SOLE RISK AND WITHOUT LIABILITY OR LEGAL EXPOSURE TO J-U-B.


| NO. | REVISION | BY | APP. | DATE |
|---|---|---|---|---|
| A | ADDENDUM NO 2 | VBK | BH | 04/06/2021 |

SPANISH FORK & MAPELTON WRF
SPANISH FORK CITY CORPORATION

INSTRUMENTATION AND CONTROL
RAS PUMPS - II P&ID

FILE : 55-20-124_35I-610
JUB PROJ. # : 55-20-124
DRAWN BY: VBK
DESIGN BY: BH
CHECKED BY: SR
ONE INCH
AT FULL SIZE, IF NOT ONE INCH, SCALE ACCORDINGLY
LAST UPDATED: 6/30/2022

DRAWING:
35-I-610

SHEET: 553 OF 691


Plot Date:6/30/2022 8:12 PM Plotted By: Pinnaduwa-Hewage, Ranga
Date Created:4/28/2021 C:\PLANTCAD\CHE\181330159_SPNSH FRK MAPLTN WRF DESIGN\PID DWG\55-20-124_35I-610.DWG

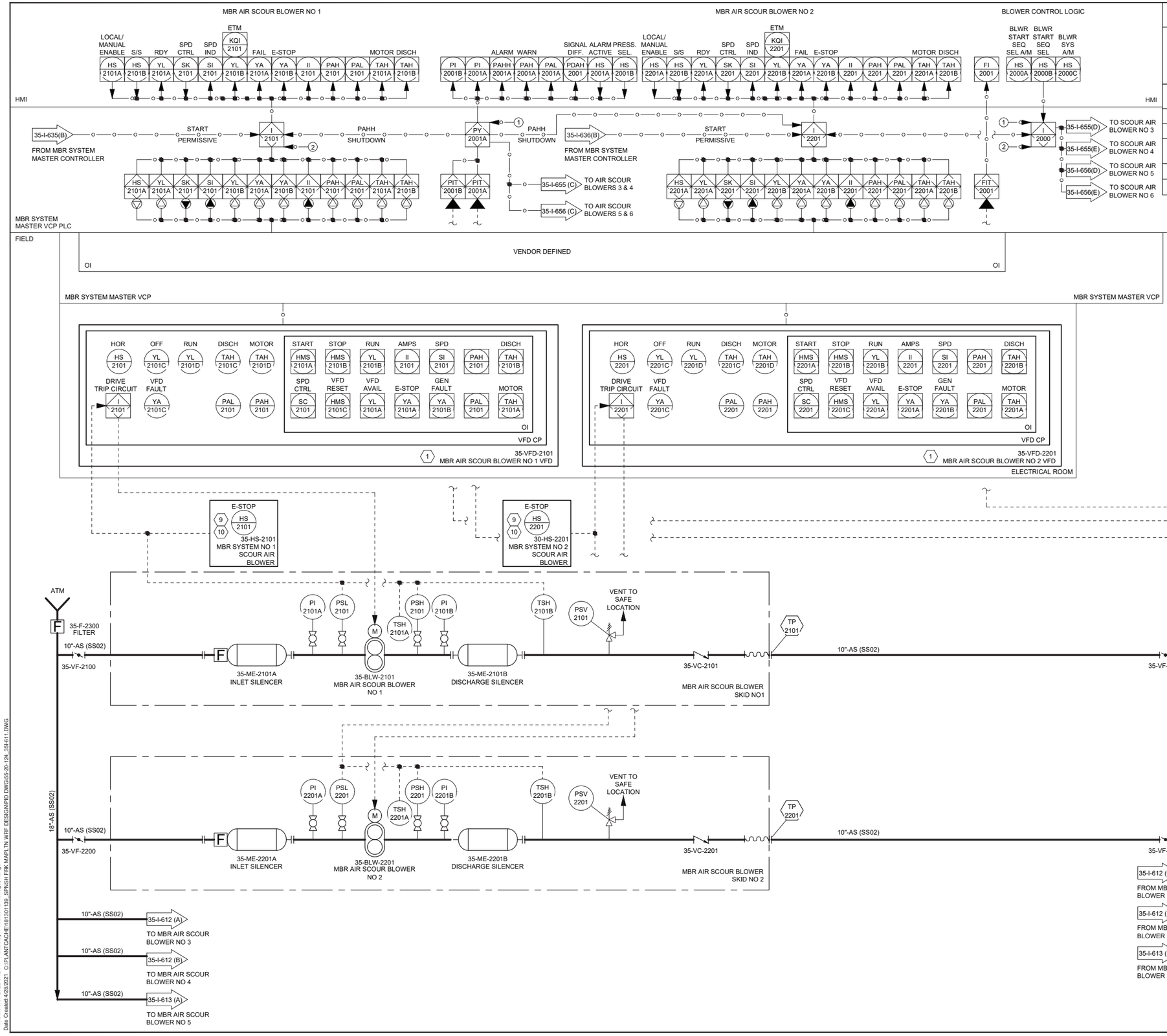


## GENERAL SHEET NOTES

1. VENDOR SKID EQUIPMENT SHALL BE FURNISHED BY THE MBR SYSTEM SUPPLIER. FIELD INSTALLATION BY CONTRACTOR.
2. OFF-SKID PIPELINES FURNISHED AND INSTALLED BY THE CONTRACTOR.
3. FIELD WIRING BY THE CONTRACTOR.

## SHEET KEYNOTES

| | |
|---|---|
| 1 | FURNISH AND INSTALLED BY THE CONTRACTOR. |
| 9 | LCS FIELD LOCATED NEXT TO BLOWER. |
| 10 | MBR SYSTEM SUPPLIER FURNISHED EQUIPMENT SHIPPED LOOSE FOR CONTRACTOR INSTALLATION. |
| 11 | FURNISH AND INSTALL SUNSHIELD. |
| 12 | DRAIN VALVE TO BE LOCATED AT LOWEST POINT OF PIPING TO REMOVE CONDENSATE. |


J-U-B ENGINEERS, INC.

J-U-B ENGINEERS, INC.
392. E. Winchester St., Suite 300
Salt Lake City, UT 84107
Phone: 801.547.0393
www.jub.com

Subconsultant:

Stantec

Stantec
2890 E Cottonwood Pkwy
Suite 300, Salt Lake City, Ut 84121
Tel: +1.801.617.3200
www.stantec.com


AGENCY

REVIEW


REUSE OF DRAWINGS
J-U-B SHALL RETAIN ALL COMMON LAW STATUTORY, COPYRIGHT AND OTHER RESERVED RIGHTS OF THESE DRAWINGS, AND THE SAME SHALL NOT BE REUSED WITHOUT J-U-B'S PRIOR WRITTEN CONSENT. ANY REUSE WITHOUT WRITTEN CONSENT BY J-U-B WILL BE AT CLIENTS SOLE RISK AND WITHOUT LIABILITY OR LEGAL EXPOSURE TO J-U-B.


| NO. | DESCRIPTION | BY | APR. | DATE |
|---|---|---|---|---|
| | REVISION | | | |

SPANISH FORK & MAPELTON WRF
SPANISH FORK CITY CORPORATION

INSTRUMENTATION AND CONTROL
AIR SCOUR BLOWERS - I P&ID

| | |
|---|---|
| FILE : | 55-20-124_35I-611 |
| JUB PROJ. # : | 55-20-124 |
| DRAWN BY: | VBK |
| DESIGN BY: | BH |
| CHECKED BY: | SR |

ONE INCH
AT FULL SIZE, IF NOT ONE INCH, SCALE ACCORDINGLY

LAST UPDATED: 6/30/2022

DRAWING:
35-I-611

SHEET: 554 OF 691


Plot Date:6/30/2022 8:12 PM Plotted By: Pimaduwa Hewage, Ranga
Date Created:4/28/2021 C:\PLANTCACHE\181301139_SPNSH FRK MAPLTN WRF DESIGN\PID DWG\55-20-124_35I-611.DWG

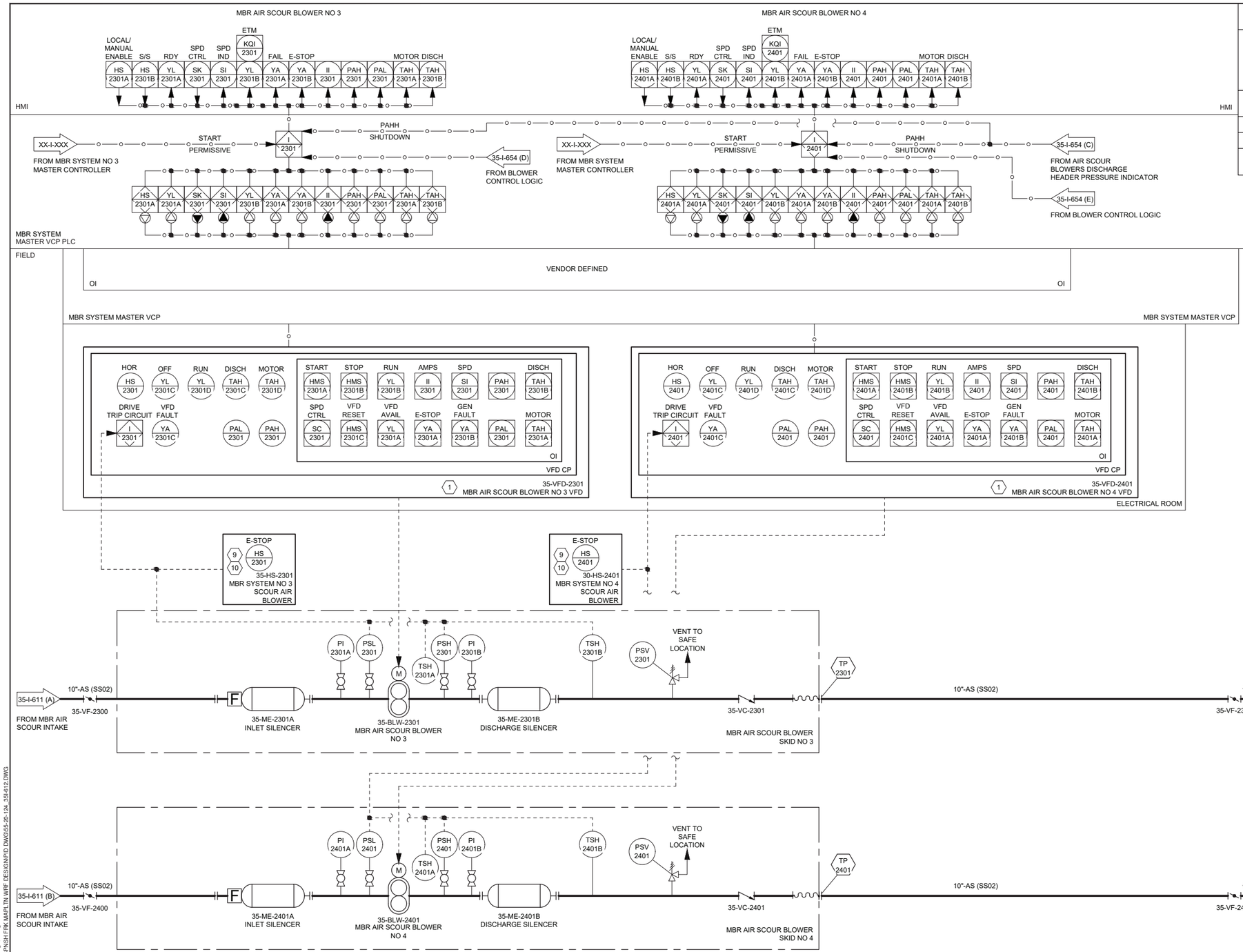


## GENERAL SHEET NOTES

1. VENDOR SKID EQUIPMENT SHALL BE FURNISHED BY THE MBR SYSTEM SUPPLIER. FIELD INSTALLATION BY CONTRACTOR.
2. OFF-SKID PIPELINES FURNISHED AND INSTALLED BY THE CONTRACTOR.
3. FIELD WIRING BY THE CONTRACTOR.

## SHEET KEYNOTES

| | |
|---|---|
| 1 | FURNISH AND INSTALLED BY THE CONTRACTOR. |
| 9 | LCS FIELD LOCATED NEXT TO BLOWER. |
| 10 | MBR SYSTEM SUPPLIER FURNISHED EQUIPMENT SHIPPED LOOSE FOR CONTRACTOR INSTALLATION. |


J-U-B ENGINEERS, INC.

J-U-B ENGINEERS, INC.
392. E. Winchester St., Suite 300
Salt Lake City, UT 84107
Phone: 801.547.0393
www.jub.com

Subconsultant:

Stantec

Stantec
2890 E Cottonwood Pkwy
Suite 300, Salt Lake City, Ut 84121
Tel: +1.801.617.3200
www.stantec.com


AGENCY

REVIEW


REUSE OF DRAWINGS
J-U-B SHALL RETAIN ALL COMMON LAW, STATUTORY, COPYRIGHT AND OTHER RESERVED RIGHTS OF THESE DRAWINGS, AND THE SAME SHALL NOT BE REUSED WITHOUT J-U-B'S PRIOR WRITTEN CONSENT. ANY REUSE WITHOUT WRITTEN CONSENT BY J-U-B WILL BE AT CLIENTS SOLE RISK AND WITHOUT LIABILITY OR LEGAL EXPOSURE TO J-U-B.


| NO. | DESCRIPTION | BY | APR | DATE |
|---|---|---|---|---|
| | REVISION | | | |

SPANISH FORK & MAPELTON WRF
SPANISH FORK CITY CORPORATION

INSTRUMENTATION AND CONTROL
AIR SCOUR BLOWERS - II P&ID

FILE : 55-20-124_35I-612
JUB PROJ. # : 55-20-124
DRAWN BY: VBK
DESIGN BY: BH
CHECKED BY: SR

ONE INCH
AT FULL SIZE, IF NOT ONE INCH, SCALE ACCORDINGLY

LAST UPDATED: 6/30/2022

DRAWING:
35-I-612

SHEET: 555 OF 691

Plot Date:6/30/2022 8:12 PM Plotted By: Pinnaduwa-Hewage, Ranga
Date Created:4/28/2021 C:\PLANTCACHE\181301139_SPNSH FRK MAPLTN WRF DESIGN\PID DWG\55-20-124_35I-612.DWG

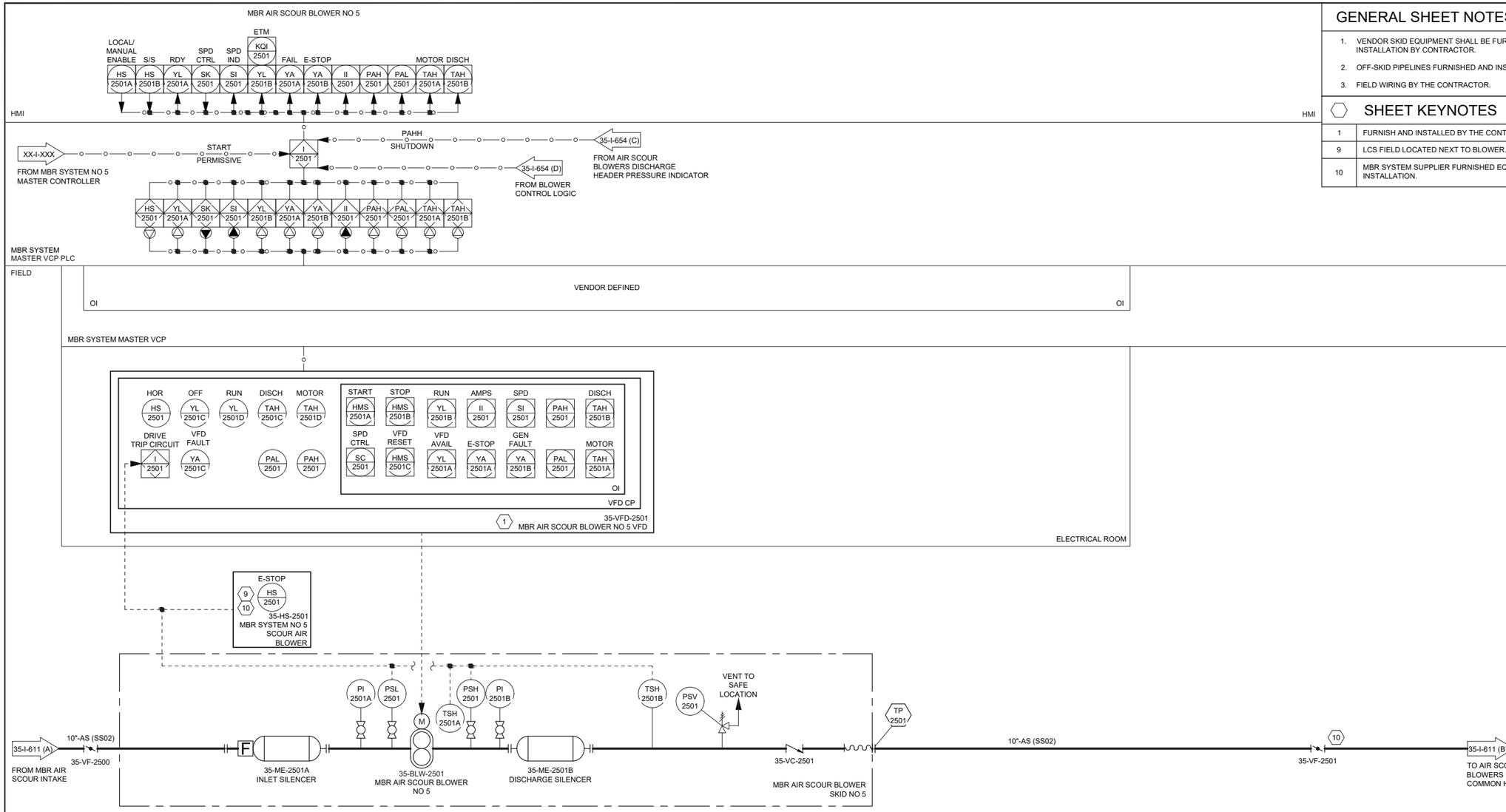


## GENERAL SHEET NOTES

1. VENDOR SKID EQUIPMENT SHALL BE FURNISHED BY THE MBR SYSTEM SUPPLIER. FIELD INSTALLATION BY CONTRACTOR.
2. OFF-SKID PIPELINES FURNISHED AND INSTALLED BY THE CONTRACTOR.
3. FIELD WIRING BY THE CONTRACTOR.

## SHEET KEYNOTES

| | |
|---|---|
| 1 | FURNISH AND INSTALLED BY THE CONTRACTOR. |
| 9 | LCS FIELD LOCATED NEXT TO BLOWER. |
| 10 | MBR SYSTEM SUPPLIER FURNISHED EQUIPMENT SHIPPED LOOSE FOR CONTRACTOR INSTALLATION. |


J-U-B ENGINEERS, INC.
J-U-B ENGINEERS, INC.
392 E. Winchester St., Suite 300
Salt Lake City, UT 84107
Phone: 801.547.0393
www.jub.com

Subconsultant:
Stantec
Stantec
2890 E Cottonwood Pkwy
Suite 300, Salt Lake City, Ut 84121
Tel: +1.801.617.3200
www.stantec.com


AGENCY

REVIEW


REUSE OF DRAWINGS
J-U-B SHALL RETAIN ALL COMMON LAW, STATUTORY, COPYRIGHT AND OTHER RESERVED RIGHTS OF THESE DRAWINGS, AND THE SAME SHALL NOT BE REUSED WITHOUT J-U-B'S PRIOR WRITTEN CONSENT. ANY REUSE WITHOUT WRITTEN CONSENT BY J-U-B WILL BE AT CLIENTS SOLE RISK AND WITHOUT LIABILITY OR LEGAL EXPOSURE TO J-U-B.


| NO. | DESCRIPTION | BY | APR. | DATE |
|---|---|---|---|---|
| | REVISION | | | |

SPANISH FORK & MAPELTON WRF
SPANISH FORK CITY CORPORATION

INSTRUMENTATION AND CONTROL
AIR SCOUR BLOWERS - III P&ID

FILE : 55-20-124_35I-613
JUB PROJ. # : 55-20-124
DRAWN BY: VBK
DESIGN BY: BH
CHECKED BY: SR
ONE INCH
AT FULL SIZE, IF NOT ONE INCH, SCALE ACCORDINGLY
LAST UPDATED: 6/30/2022

DRAWING:
35-I-613

SHEET: 556 OF 691


Plot Date:6/30/2022 8:12 PM Plotted By: Pinnaduwa-Hewage, Ranga
Date Created:4/28/2021 C:\PLANTCAD\HE1813013\39_SPNSH FRK MAPLTN WRF DESIGN\PID DWG\55-20-124_35I-613.DWG

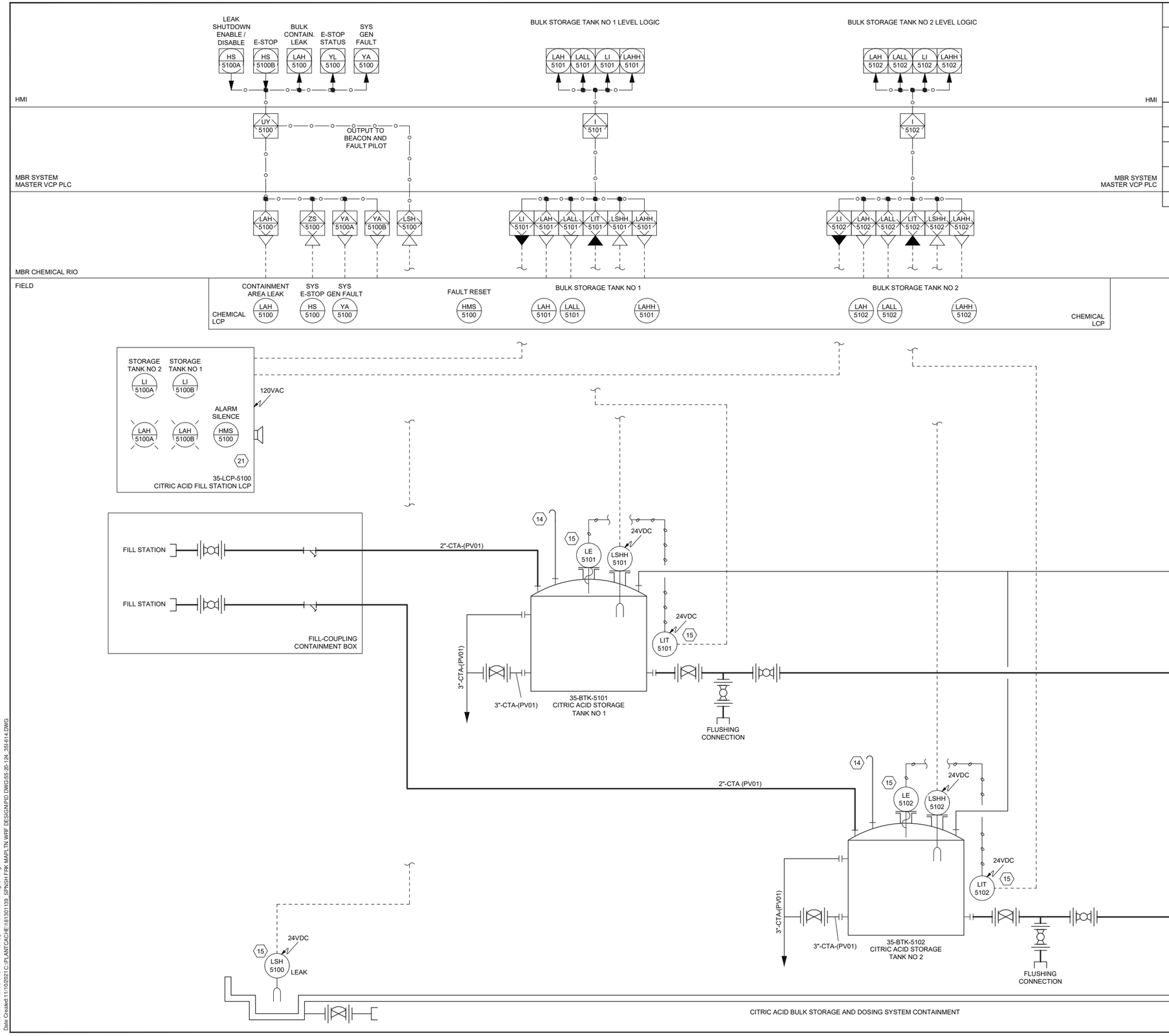


## GENERAL SHEET NOTES

1. VENDOR SKID EQUIPMENT SHALL BE FURNISHED BY THE CHEMICAL SYSTEM SUPPLIER. FIELD INSTALLATION BY CONTRACTOR.
2. OFF-SKID PIPELINES AND VALVES FURNISHED AND INSTALLED BY THE CONTRACTOR.
3. FIELD WIRING BY THE CONTRACTOR.
4. BALL VALVES TO BE VENTED TYPE.

## SHEET KEYNOTES

| | |
|---|---|
| 14 | VENT TO SAFE LOCATION. |
| 15 | REMOTE SKID-MOUNT TRANSMITTER DISPLAY NO LESS THAN 48-INCHES ABOVE FINISHED FLOOR. |
| 21 | CONTRACTOR FURNISHED AND INSTALLED 316SS NEMA 4X FILL STATION PANEL. REFER TO GI-XX DRAWING FOR DETAILS. |
| 22 | CONTRACTOR FURNISHED AND INSTALLED 316SS NEMA 4X CHEMICAL SYSTEM LCP. |


J-U-B ENGINEERS, INC.

J-U-B ENGINEERS, INC.
392. E. Winchester St., Suite 300
Salt Lake City, UT 84107
Phone: 801.547.0393
www.jub.com

Subconsultant:

Stantec
Stantec
2890 E Cottonwood Pkwy
Suite 300, Salt Lake City, Ut 84121
Tel: +1.801.617.3200
www.stantec.com


AGENCY

REVIEW


REUSE OF DRAWINGS
J-U-B SHALL RETAIN ALL COMMON LAW, STATUTORY, COPYRIGHT AND OTHER RESERVED RIGHTS OF THESE DRAWINGS, AND THE SAME SHALL NOT BE REUSED WITHOUT J-U-B'S PRIOR WRITTEN CONSENT. ANY REUSE WITHOUT WRITTEN CONSENT BY J-U-B WILL BE AT CLIENTS SOLE RISK AND WITHOUT LIABILITY OR LEGAL EXPOSURE TO J-U-B.


| NO. | DESCRIPTION | BY | APR | DATE |
|---|---|---|---|---|
| | REVISION | | | |

SPANISH FORK & MAPELTON WRF
SPANISH FORK CITY CORPORATION

INSTRUMENTATION AND CONTROL
CITRIC ACID STORAGE AND FEED - I

FILE : 55-20-124_35I-614
JUB PROJ. # : 55-20-124
DRAWN BY: UHB
DESIGN BY: BH
CHECKED BY: SR
ONE INCH
AT FULL SIZE, IF NOT ONE INCH, SCALE ACCORDINGLY
LAST UPDATED: 6/30/2022

DRAWING:
35-I-614

SHEET: 557 OF 691


Plot Date:6/30/2022 8:12 PM Plotted By: Pimradswa-Hewage, Ranga
Date Created:11/10/2021 C:\PLANTCAD\HE1813\01\39_SPNSH FRK MAPLTN WRF DESIGN\PID DWG\55-20-124_35I-614.DWG

CITRIC ACID DOSING PUMP NO 1

CITRIC ACID DOSING PUMP NO 2

HMI

MBR SYSTEM
MASTER VCP PLC

MBR CHEMICAL RIO

CHEMICAL
LCP

FIELD

VFD CP

35-VFD-5110
CITRIC ACID DOSING PUMP NO 1 VFD

35-VFD-5120
CITRIC ACID DOSING PUMP NO 2 VFD

ELECTRICAL ROOM

35-I-614
TO CITRIC ACID
STORAGE TANKS

35-I-614
FROM CITRIC ACID
STORAGE TANKS

1 1/2"-CTA (PV01)

35-P-5110
CITRIC ACID DOSING
PUMP NO 1

35-P-5120
CITRIC ACID DOSING
PUMP NO 2

FLUSHING
CONNECTION

4"-CTA (PV01)

DRIP LEG

35-I-616(A)
TO MBR PERMATE
PUMP NO 1
INJECTION ASSEMBLIES

35-I-616(B)
TO MBR PERMATE
PUMP NO 2
INJECTION ASSEMBLIES

35-I-616(C)
TO MBR PERMATE
PUMP NO 3
INJECTION ASSEMBLIES

35-I-616(D)
TO MBR PERMATE
PUMP NO 4
INJECTION ASSEMBLIES

35-I-616(E)
TO MBR PERMATE
PUMP NO 5
INJECTION ASSEMBLIES

35-I-616(F)
TO MBR PERMATE
PUMP NO 6
INJECTION ASSEMBLIES

VENDOR SKID

STORAGE AND DOSING SYSTEM CONTAINMENT

## GENERAL SHEET NOTES

1. VENDOR SKID EQUIPMENT SHALL BE FURNISHED BY THE CHEMICAL SYSTEM SUPPLIER. FIELD INSTALLATION BY CONTRACTOR.
2. OFF-SKID PIPELINES AND VALVES FURNISHED AND INSTALLED BY THE CONTRACTOR.
3. FIELD WIRING BY THE CONTRACTOR.
4. BALL VALVES TO BE VENTED TYPE.

## SHEET KEYNOTES

| | |
|---|---|
| 15 | REMOTE SKID-MOUNT TRANSMITTER DISPLAY NO LESS THAN 48-INCHES ABOVE FINISHED FLOOR. |
| 16 | DOUBLE-CONTAINED PIPING TO SLOPE BACK TO CONTAINMENT AREA. |


J-U-B ENGINEERS, INC.

J-U-B ENGINEERS, INC.
392. E. Winchester St., Suite 300
Salt Lake City, UT 84107
Phone: 801.547.0393
www.jub.com

Subconsultant:

Stantec

Stantec
2890 E Cottonwood Pkwy
Suite 300, Salt Lake City, Ut
84121
Tel: +1.801.617.3200
www.stantec.com


AGENCY

REVIEW


REUSE OF DRAWINGS
J-U-B SHALL RETAIN ALL COMMON LAW STATUTORY, COPYRIGHT AND OTHER RESERVED RIGHTS OF THESE DRAWINGS, AND THE SAME SHALL NOT BE REUSED WITHOUT J-U-B'S PRIOR WRITTEN CONSENT. ANY REUSE WITHOUT WRITTEN CONSENT BY J-U-B WILL BE AT CLIENTS SOLE RISK AND WITHOUT LIABILITY OR LEGAL EXPOSURE TO J-U-B.


| NO. | DESCRIPTION | BY | APR. | DATE |
|---|---|---|---|---|
| | REVISION | | | |

SPANISH FORK & MAPELTON WRF
SPANISH FORK CITY CORPORATION

INSTRUMENTATION AND CONTROL
CITRIC ACID STORAGE AND FEED - II P&ID

FILE : 55-20-124_35I-615
JUB PROJ. # : 55-20-124
DRAWN BY: UHB
DESIGN BY: BH
CHECKED BY: SR
ONE INCH
AT FULL SIZE, IF NOT ONE INCH, SCALE ACCORDINGLY
LAST UPDATED: 6/30/2022

DRAWING:
35-I-615

SHEET: 558 OF 691


Plot Date:6/30/2022 8:12 PM Plotted By: Pinnaduwa-Hewage, Ranga
Date Created:1/11/2022 C:\PLANTCAD\HE1181301139_SPNSH FRK MAPLTN WRF DESIGN\PID DWG\55-20-124_35I-615.DWG

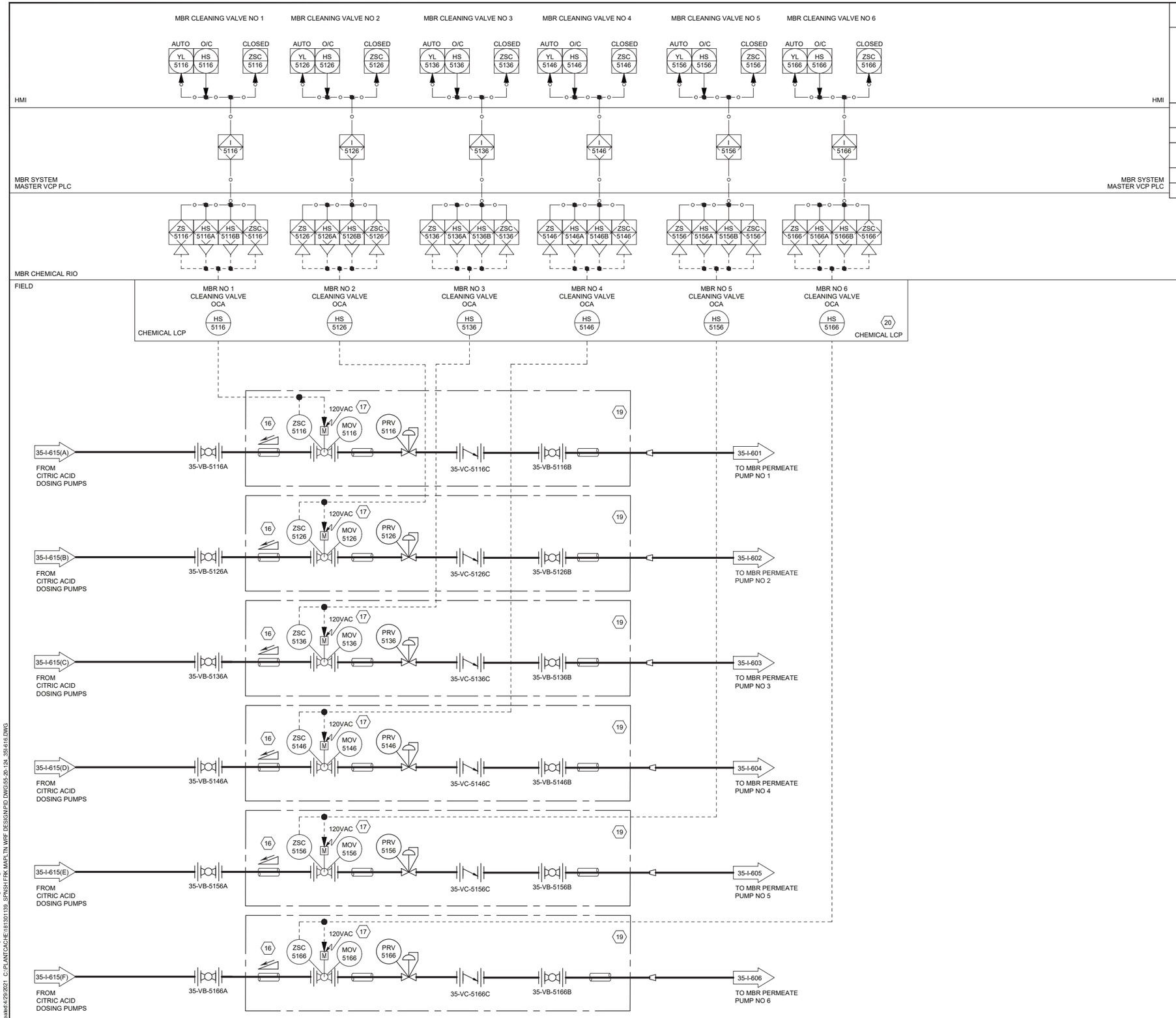


## GENERAL SHEET NOTES

1. VENDOR SKID EQUIPMENT SHALL BE FURNISHED BY THE CHEMICAL SYSTEM SUPPLIER. FIELD INSTALLATION BY CONTRACTOR.
2. OFF-SKID PIPELINES AND VALVES FURNISHED AND INSTALLED BY THE CONTRACTOR.
3. FIELD WIRING BY THE CONTRACTOR.
4. BALL VALVES TO BE VENTED TYPE.

## SHEET KEYNOTES

| | |
|---|---|
| 16 | DOUBLE-CONTAINED PIPING TO SLOPE BACK TO CONTAINMENT AREA. |
| 17 | CHEMICAL SYSTEM SUPPLIER FURNISHED EQUIPMENT SHIPPED LOOSE FOR CONTRACTOR INSTALLATION. |
| 19 | LOCATE ISOLATION ASSEMBLY AT INJECTION POINT. |
| 20 | VENDOR FURNISHED AND INSTALLED 316SS NEMA 4X CHEMICAL SYSTEM LCP. |


J-U-B ENGINEERS, INC.

J-U-B ENGINEERS, INC.
392. E. Winchester St., Suite 300
Salt Lake City, UT 84107
Phone: 801.547.0393
www.jub.com

Subconsultant:

Stantec
Stantec
2890 E Cottonwood Pkwy
Suite 300, Salt Lake City, Ut
84121
Tel: +1.801.617.3200
www.stantec.com


AGENCY

REVIEW


REUSE OF DRAWINGS
J-U-B SHALL RETAIN ALL COMMON LAW, STATUTORY, COPYRIGHT AND OTHER RESERVED RIGHTS OF THESE DRAWINGS, AND THE SAME SHALL NOT BE REUSED WITHOUT J-U-B'S PRIOR WRITTEN CONSENT. ANY REUSE WITHOUT WRITTEN CONSENT BY J-U-B WILL BE AT CLIENTS SOLE RISK AND WITHOUT LIABILITY OR LEGAL EXPOSURE TO J-U-B.


| NO. | DESCRIPTION | BY | APR | DATE |
|---|---|---|---|---|
| | REVISION | | | |

SPANISH FORK & MAPELTON WRF
SPANISH FORK CITY CORPORATION

INSTRUMENTATION AND CONTROL
CITRIC ACID STORAGE AND FEED - III P&ID

FILE : 55-20-124_35I-616
JUB PROJ. # : 55-20-124
DRAWN BY: UHB
DESIGN BY: BH
CHECKED BY: SR

ONE INCH
AT FULL SIZE, IF NOT ONE INCH, SCALE ACCORDINGLY

LAST UPDATED: 6/30/2022

DRAWING:
35-I-616

SHEET: 559 OF 691


Plot Date:6/30/2022 8:12 PM Plotted By: Pimaduwa-Hewage, Ranga
Date Created:4/29/2021 C:\PLANTCACHE\181301199_SPNSH FRK MAPLTN WRF DESIGN\PID DWG\55-20-124_35I-616.DWG

## GENERAL SHEET NOTES

1. VENDOR SKID EQUIPMENT SHALL BE FURNISHED BY THE CHEMICAL SYSTEM SUPPLIER. FIELD INSTALLATION BY CONTRACTOR.
2. OFF-SKID PIPELINES AND VALVES FURNISHED AND INSTALLED BY THE CONTRACTOR.
3. FIELD WIRING BY THE CONTRACTOR.
4. BALL VALVES TO BE VENTED TYPE.

## SHEET KEYNOTES

| | |
|---|---|
| 14 | VENT TO SAFE LOCATION. |
| 15 | REMOTE SKID-MOUNT TRANSMITTER DISPLAY NO LESS THAN 48-INCHES ABOVE FINISHED FLOOR. |
| 16 | DOUBLE-CONTAINED PIPING TO SLOPE BACK TO CONTAINMENT AREA. |
| 17 | CHEMICAL SYSTEM SUPPLIER FURNISHED EQUIPMENT SHIPPED LOOSE FOR CONTRACTOR INSTALLATION. |
| 18 | TOP TOTE INDEPENDENTLY SUPPORTED FROM WIT. SUPPORT BY CONTRACTOR. |


J-U-B ENGINEERS, INC.

J-U-B ENGINEERS, INC.
392. E. Winchester St., Suite 300
Salt Lake City, UT 84107
Phone: 801.547.0393
www.jub.com

Subconsultant:

Stantec
Stantec
2890 E Cottonwood Pkwy
Suite 300, Salt Lake City, Ut 84121
Tel: +1.801.617.3200
www.stantec.com


AGENCY

REVIEW


REUSE OF DRAWINGS
J-U-B SHALL RETAIN ALL COMMON LAW, STATUTORY, COPYRIGHT AND OTHER RESERVED RIGHTS OF THESE DRAWINGS, AND THE SAME SHALL NOT BE REUSED WITHOUT J-U-B'S PRIOR WRITTEN CONSENT. ANY REUSE WITHOUT PRIOR WRITTEN CONSENT BY J-U-B WILL BE AT CLIENTS SOLE RISK AND WITHOUT LIABILITY OR LEGAL EXPOSURE TO J-U-B.


| NO. | DESCRIPTION | BY | APP'L | DATE |
|---|---|---|---|---|
| | REVISION | | | |

SPANISH FORK & MAPELTON WRF
SPANISH FORK CITY CORPORATION

INSTRUMENTATION AND CONTROL
SODIUM HYPOCHLORITE STORAGE AND FEED - I P&ID

| | |
|---|---|
| FILE : | 55-20-124_35I-617 |
| JUB PROJ. # : | 55-20-124 |
| DRAWN BY: | UHB |
| DESIGN BY: | BH |
| CHECKED BY: | SR |

ONE INCH
AT FULL SIZE, IF NOT ONE INCH, SCALE ACCORDINGLY

LAST UPDATED: 6/30/2022

DRAWING:
35-I-617

SHEET: 560 OF 691


Plot Date:6/30/2022 8:12 PM Plotted By: Pinnaduwa-Hewage, Ranga
Date Created:4/29/2021 C:\PLANTCACHE\181301139_SPNSH FRK MAPLTN WRF DESIGN\PID DWG\55-20-124_35I-617.DWG

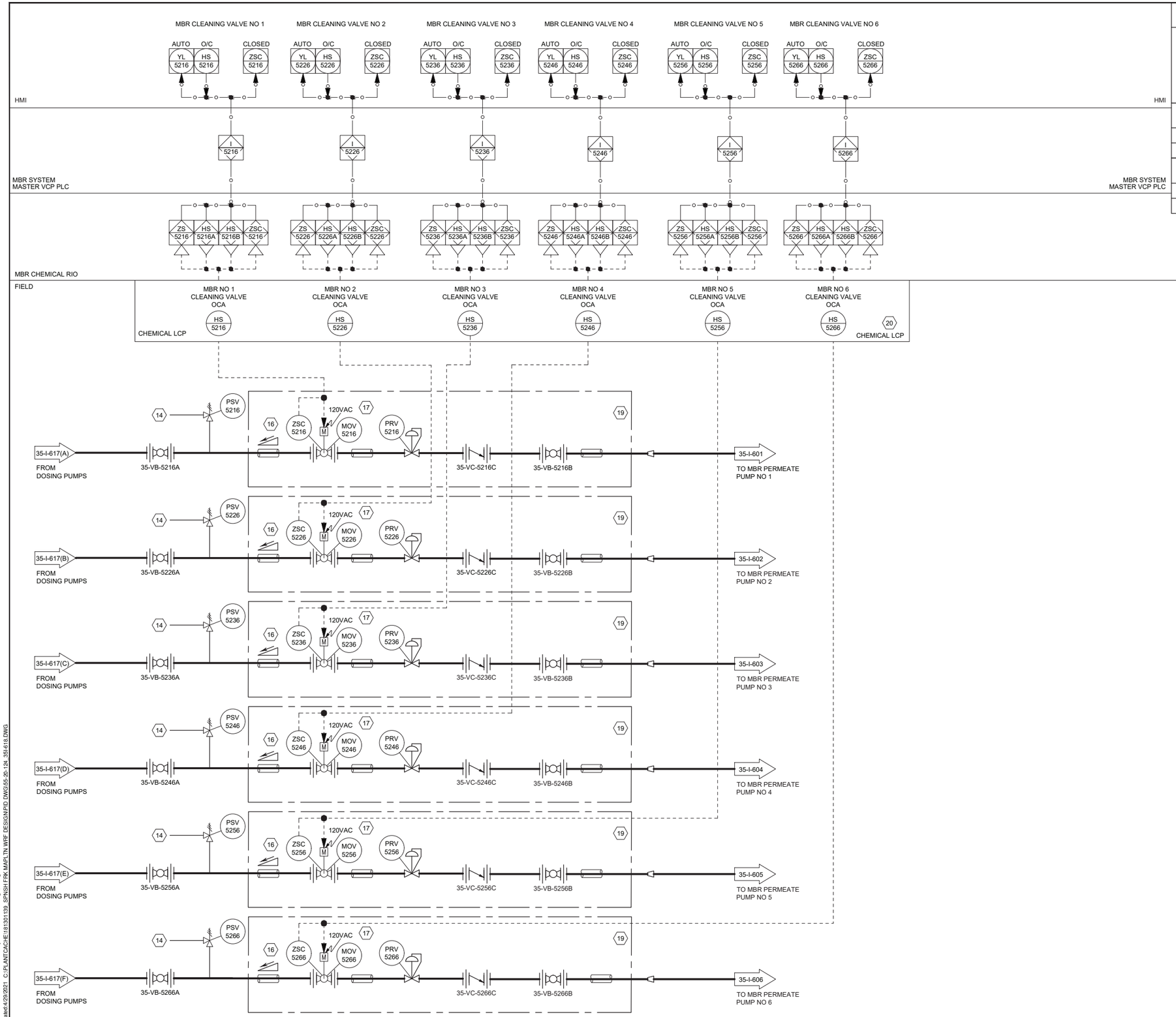


## GENERAL SHEET NOTES

1. VENDOR SKID EQUIPMENT SHALL BE FURNISHED BY THE CHEMICAL SYSTEM SUPPLIER. FIELD INSTALLATION BY CONTRACTOR.
2. OFF-SKID PIPELINES AND VALVES FURNISHED AND INSTALLED BY THE CONTRACTOR.
3. FIELD WIRING BY THE CONTRACTOR.
4. BALL VALVES TO BE VENTED TYPE.

## SHEET KEYNOTES

| | |
|---|---|
| 14 | VENT TO SAFE LOCATION. |
| 16 | DOUBLE-CONTAINED PIPING TO SLOPE BACK TO CONTAINMENT AREA. |
| 17 | CHEMICAL SYSTEM SUPPLIER FURNISHED EQUIPMENT SHIPPED LOOSE FOR CONTRACTOR INSTALLATION. |
| 19 | LOCATE ISOLATION ASSEMBLY AT INJECTION POINT. |
| 20 | VENDOR FURNISHED AND INSTALLED 316SS NEMA 4X CHEMICAL SYSTEM LCP. |


J-U-B ENGINEERS, INC.

J-U-B ENGINEERS, INC.
392. E. Winchester St., Suite 300
Salt Lake City, UT 84107
Phone: 801.547.0393
www.jub.com

Subconsultant:

Stantec
Stantec
2890 E Cottonwood Pkwy
Suite 300, Salt Lake City, Ut
84121
Tel: +1.801.617.3200
www.stantec.com


AGENCY

REVIEW


REUSE OF DRAWINGS
J-U-B SHALL RETAIN ALL COMMON LAW, STATUTORY, COPYRIGHT AND OTHER RESERVED RIGHTS OF THESE DRAWINGS, AND THE SAME SHALL NOT BE REUSED WITHOUT J-U-B'S PRIOR WRITTEN CONSENT. ANY REUSE WITHOUT WRITTEN CONSENT BY J-U-B WILL BE AT CLIENTS SOLE RISK AND WITHOUT LIABILITY OR LEGAL EXPOSURE TO J-U-B.


| NO. | DESCRIPTION | BY | APR | DATE |
|---|---|---|---|---|
| | REVISION | | | |

# SPANISH FORK & MAPELTON WRF
# SPANISH FORK CITY CORPORATION

INSTRUMENTATION AND CONTROL
SODIUM HYPOCHLORITE STORAGE AND FEED - II P&ID

FILE : 55-20-124_35I-618
JUB PROJ. # : 55-20-124
DRAWN BY: UHB
DESIGN BY: BH
CHECKED BY: SR

ONE INCH
AT FULL SIZE, IF NOT ONE INCH, SCALE ACCORDINGLY

LAST UPDATED: 6/30/2022

DRAWING:
35-I-618

SHEET: 561 OF 691


Plot Date:6/30/2022 8:12 PM Plotted By: Pimradawa-Hewage, Ranga
Date Created:4/29/2021 C:\PLANTCACHE\181301199_SPNSH FRK MAPLTN WRF DESIGN\PID DWG\55-20-124_35I-618.DWG

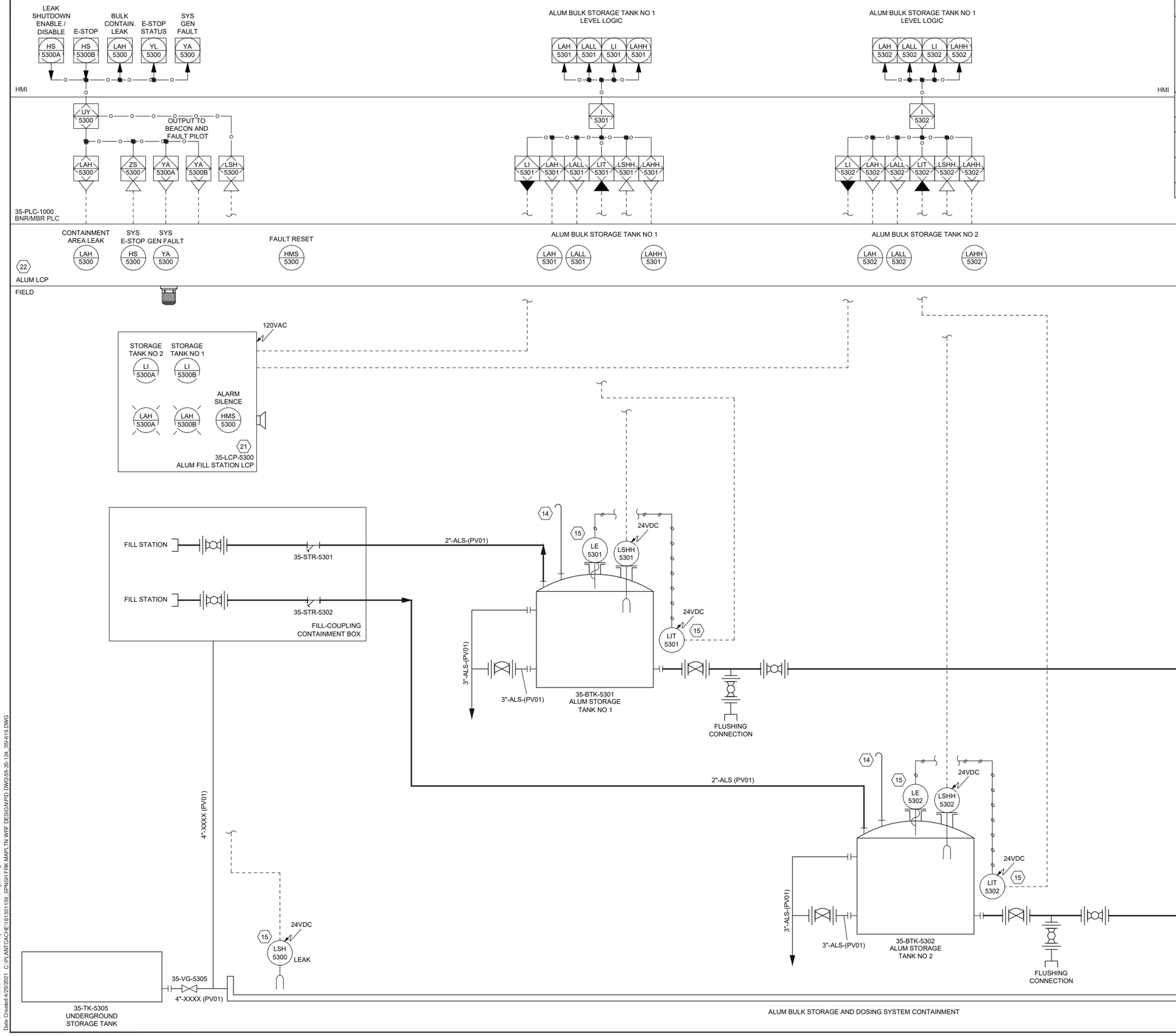


## GENERAL SHEET NOTES

1. VENDOR SKID EQUIPMENT SHALL BE FURNISHED BY THE CHEMICAL SYSTEM SUPPLIER. FIELD INSTALLATION BY CONTRACTOR.
2. OFF-SKID PIPELINES AND VALVES FURNISHED AND INSTALLED BY THE CONTRACTOR.
3. FIELD WIRING BY THE CONTRACTOR.
4. BALL VALVES TO BE VENTED TYPE.

## SHEET KEYNOTES

| | |
|---|---|
| 14 | VENT TO SAFE LOCATION. |
| 15 | REMOTE SKID-MOUNT TRANSMITTER DISPLAY NO LESS THAN 48-INCHES ABOVE FINISHED FLOOR. |
| 21 | CONTRACTOR FURNISHED AND INSTALLED 316SS NEMA 4X FILL STATION PANEL. REFER TO GI-XX DRAWING FOR DETAILS. |
| 22 | CONTRACTOR FURNISHED AND INSTALLED 316SS NEMA 4X CHEMICAL SYSTEM LCP. |


J-U-B ENGINEERS, INC.

J-U-B ENGINEERS, INC.
392 E. Winchester St., Suite 300
Salt Lake City, UT 84107
Phone: 801.547.0393
www.jub.com

Subconsultant:

Stantec
Stantec
2890 E Cottonwood Pkwy
Suite 300, Salt Lake City, Ut 84121
Tel: +1.801.617.3200
www.stantec.com


AGENCY

REVIEW


REUSE OF DRAWINGS
J-U-B SHALL RETAIN ALL COMMON LAW, STATUTORY, COPYRIGHT AND OTHER RESERVED RIGHTS OF THESE DRAWINGS, AND THE SAME SHALL NOT BE REUSED WITHOUT J-U-B'S PRIOR WRITTEN CONSENT. ANY REUSE WITHOUT WRITTEN CONSENT BY J-U-B WILL BE AT CLIENTS SOLE RISK AND WITHOUT LIABILITY OR LEGAL EXPOSURE TO J-U-B.


| NO. | DESCRIPTION | BY | APR. | DATE |
|---|---|---|---|---|
| | REVISION | | | |

SPANISH FORK & MAPELTON WRF
SPANISH FORK CITY CORPORATION

INSTRUMENTATION AND CONTROL
ALUM STORAGE AND FEED - I

FILE : 55-20-124_35I-619
JUB PROJ. # : 55-20-124
DRAWN BY: UHB
DESIGN BY: BH
CHECKED BY: SR
ONE INCH
AT FULL SIZE, IF NOT ONE INCH, SCALE ACCORDINGLY
LAST UPDATED: 6/30/2022

DRAWING:
35-I-619

SHEET: 562 OF 691

Plot Date:6/30/2022 8:13 PM Plotted By: Pinnaduwa-Hewage, Ranga
Date Created:4/29/2021 C:\PLANTCAD\HE18130\139_SPNSH FRK MAPLTN WRF DESIGN\PID DWG\55-20-124_35I-619.DWG

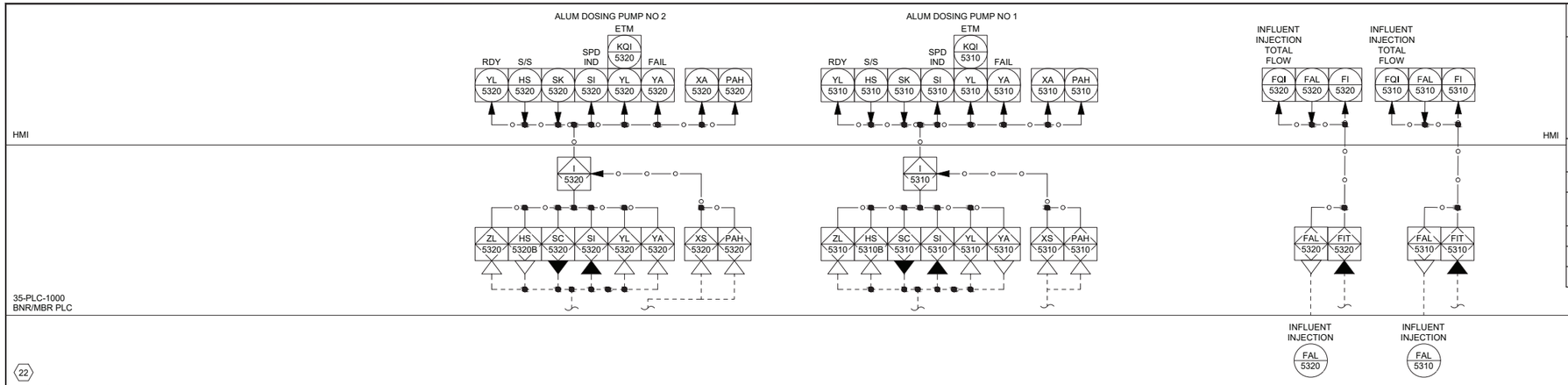


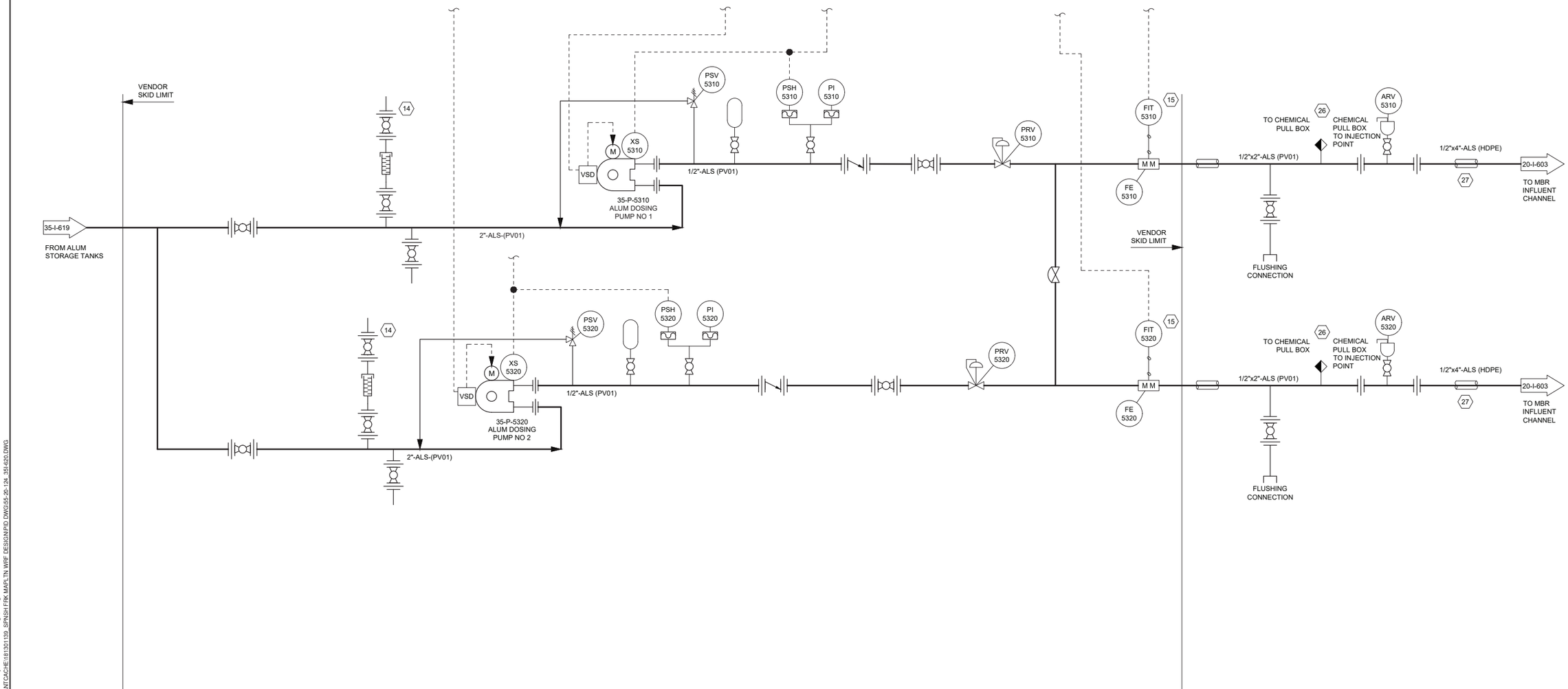


CONTINUED FROM DWG 35-I-619

ALUM BULK STORAGE AND DOSING SYSTEM CONTAINMENT

## GENERAL SHEET NOTES

1. VENDOR SKID EQUIPMENT SHALL BE FURNISHED BY THE CHEMICAL SYSTEM SUPPLIER. FIELD INSTALLATION BY CONTRACTOR.
2. OFF-SKID PIPELINES AND VALVES FURNISHED AND INSTALLED BY THE CONTRACTOR.
3. FIELD WIRING BY THE CONTRACTOR.
4. BALL VALVES TO BE VENTED TYPE.

## SHEET KEYNOTES

| | |
|---|---|
| 14 | VENT TO SAFE LOCATION. |
| 15 | REMOTE SKID-MOUNT TRANSMITTER DISPLAY NO LESS THAN 48-INCHES ABOVE FINISHED FLOOR. |
| 22 | CONTRACTOR FURNISHED AND INSTALLED 316SS NEMA 4X CHEMICAL SYSTEM LCP. |
| 26 | SEE MECHANICAL SHEETS FOR CHEMICAL PULL BOX TRANSITION DETAIL. |
| 27 | BOTH ALUM FEED PIPES ARE CONTAINED IN THE SAME 4" PIPE. |


J-U-B ENGINEERS, INC.

J-U-B ENGINEERS, INC.
392. E. Winchester St., Suite 300
Salt Lake City, UT 84107
Phone: 801.547.0393
www.jub.com

Subconsultant:

Stantec
Stantec
2890 E Cottonwood Pkwy
Suite 300, Salt Lake City, Ut 84121
Tel: +1.801.617.3200
www.stantec.com


AGENCY

REVIEW


REUSE OF DRAWINGS
J-U-B SHALL RETAIN ALL COMMON LAW, STATUTORY, COPYRIGHT AND OTHER RESERVED RIGHTS OF THESE DRAWINGS, AND THE SAME SHALL NOT BE REUSED WITHOUT J-U-B'S PRIOR WRITTEN CONSENT. ANY REUSE WITHOUT WRITTEN CONSENT BY J-U-B WILL BE AT CLIENTS SOLE RISK AND WITHOUT LIABILITY OR LEGAL EXPOSURE TO J-U-B.


| NO. | DESCRIPTION | BY | APP'L | DATE |
|---|---|---|---|---|
| | REVISION | | | |

SPANISH FORK & MAPELTON WRF
SPANISH FORK CITY CORPORATION

INSTRUMENTATION AND CONTROL
ALUM STORAGE AND FEED - II

| | |
|---|---|
| FILE : | 55-20-124_35I-620 |
| JUB PROJ. # : | 55-20-124 |
| DRAWN BY: | UHB |
| DESIGN BY: | BH |
| CHECKED BY: | SR |

ONE INCH
AT FULL SIZE, IF NOT ONE INCH, SCALE ACCORDINGLY

LAST UPDATED: 7/5/2022

DRAWING:
35-I-620

SHEET: 563 OF 691


Plot Date:7/5/2022 11:31 AM Plotted By: Pinnaduwa-Hewage, Ranga
Date Created:5/28/2021 C:\PLANTCAD\HE1813011\39_SPNSH FRK MAPLTN WRF DESIGN\PID DWG\55-20-124_35I-620.DWG

## SHEET KEYNOTES

| | |
|---|---|
| 23 | VENDOR SUPPLIED. |
| 24 | DRAIN VALVE IS SUPPLIED BY VENDOR AND IS AUTO-TIMED FOR PERIODIC CONDENSATE DISCHARGE. |

HMI

ETM KQI 1810 — AUTO YL 1810 — FAIL YL 1810 — E-STOP YA 1810A — AMPS YA 1810B — II 1810

ETM KQI 1820 — AUTO YL 1820 — FAIL YL 1820 — E-STOP YA 1820A — AMPS YA 1820B — II 1820

HS 1008

PI 1010

MBR SYSTEM MASTER VCP PLC

I 1810 — ZL 1810 — YL 1810 — YA 1810A — YA 1810B — II 1810

I 1820 — ZL 1820 — YL 1820 — YA 1820A — YA 1820B — II 1820

HS 1008

PIT 1010

FIELD

TEST-OFF-AUTO — HS 1000A

COMP 1 RUN — YL 1810

GENERAL FAULT — YA 1000

E-STOP — HS 1000B

COMP 2 RUN — YL 1820

COMP1/ COMP2 ALT — HS 1000C

AIR COMPRESSOR NO 1: ETM KQI 1810 — FAIL YA 1810 — START HMS 1810A — STOP HMS 1810B

AIR COMPRESSOR NO 2: ETM KQI 1820 — FAIL YA 1820 — START HMS 1820A — STOP HMS 1820B

OI

35-VCP-1000
PLANT AIR SCREW COMPRESSOR VCP
(WITH DUPLEX COMPRESSOR CONTROL)

23

TSH 1810 — PSH 1811 — PSL 1811 — PI 1811

ATM — F — M

1"-PA (SS01)

35-ME-1810
AIR COMPRESSOR NO 1 (23)

24

TSH 1820 — PSH 1821 — PSL 1821 — PI 1821

ATM — F — M

1"-PA (SS01)

35-ME-1820
AIR COMPRESSOR NO 2 (23)

24

1"-PA (SS01)

35-FLTR-1005

AUTO DRAIN VALVE WITH INTEGRAL TIMER

SOV 1005

VENT TO SAFE LOCATION

PIT 1010 — PSV 1010 — PI 1010

35-TNK-1010
AIR RECEIVER NO 1

SOV 1008 (24)

X"xX"

1"-PA (SS01) → XX-I-XXX — PRIMING AIR SUPPLY TO MBR BASINS

1"-PA (SS01) → XX-I-XXX — TEST AIR SUPPLY TO MBR BASINS

1"-PA (SS01) → XX-I-XXX — CONTROL INSTRUMENT AIR TO MBR EQUIPMENT

X"-DR (XXX → 05-I-602 — TO PLANT DRAIN


J-U-B ENGINEERS, INC.

J-U-B ENGINEERS, INC.
392. E. Winchester St., Suite 300
Salt Lake City, UT 84107
Phone: 801.547.0393
www.jub.com

Subconsultant:

Stantec
Stantec
2890 E Cottonwood Pkwy
Suite 300, Salt Lake City, Ut
84121
Tel: +1.801.617.3200
www.stantec.com


AGENCY

REVIEW


REUSE OF DRAWINGS
J-U-B SHALL RETAIN ALL COMMON LAW, STATUTORY, COPYRIGHT AND OTHER RESERVED RIGHTS OF THESE DRAWINGS, AND THE SAME SHALL NOT BE REUSED WITHOUT J-U-B'S PRIOR WRITTEN CONSENT. ANY REUSE WITHOUT WRITTEN CONSENT BY J-U-B WILL BE AT CLIENTS SOLE RISK AND WITHOUT LIABILITY OR LEGAL EXPOSURE TO J-U-B.


| NO. | DESCRIPTION | BY | APR. | DATE |
|---|---|---|---|---|
| | REVISION | | | |

SPANISH FORK & MAPELTON WRF
SPANISH FORK CITY CORPORATION

INSTRUMENTATION AND CONTROL
MBR INSTRUMENT AIR SYSTEM P&I

FILE : 55-20-124_35I-621
JUB PROJ. # : 55-20-124
DRAWN BY: ARB
DESIGN BY: BH
CHECKED BY: SR
ONE INCH
AT FULL SIZE, IF NOT ONE INCH, SCALE ACCORDINGLY
LAST UPDATED: 6/30/2022

DRAWING:
35-I-621

SHEET: 564 OF 691


Plot Date:6/30/2022 8:13 PM Plotted By: Pimradawa-Hewage, Ranga
Date Created:4/27/2021 C:\PLANTCAD\HE1813201139_SPNISH FRK MAPLTN WRF DESIGN\PID DWG\55-20-124_35I-621.DWG

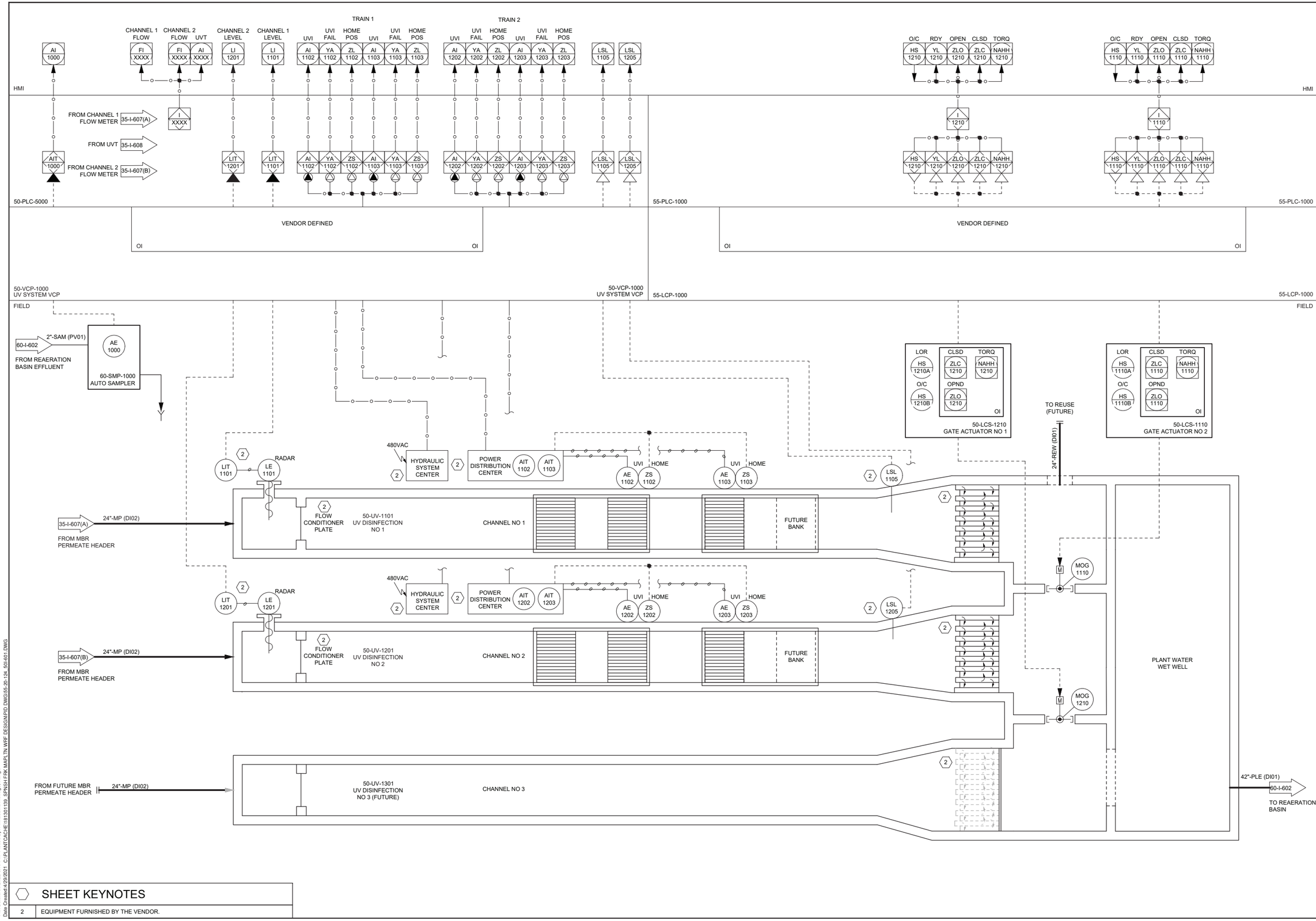


## SHEET KEYNOTES

| | |
|---|---|
| 2 | EQUIPMENT FURNISHED BY THE VENDOR. |


J-U-B ENGINEERS, INC.

J-U-B ENGINEERS, INC.
392 E. Winchester St., Suite 300
Salt Lake City, UT 84107
Phone: 801.547.0393
www.jub.com

Subconsultant:

Stantec
Stantec
2890 E Cottonwood Pkwy
Suite 300, Salt Lake City, Ut 84121
Tel: +1.801.617.3200
www.stantec.com


AGENCY

REVIEW


REUSE OF DRAWINGS
J-U-B SHALL RETAIN ALL COMMON LAW, STATUTORY, COPYRIGHT AND OTHER RESERVED RIGHTS OF THESE DRAWINGS, AND THE SAME SHALL NOT BE REUSED WITHOUT J-U-B'S PRIOR WRITTEN CONSENT. ANY REUSE WITHOUT WRITTEN CONSENT BY J-U-B WILL BE AT CLIENTS SOLE RISK AND WITHOUT LIABILITY OR LEGAL EXPOSURE TO J-U-B.


| NO. | DESCRIPTION | DATE | BY |
|---|---|---|---|
| | REVISION | APR | |

SPANISH FORK & MAPELTON WRF
SPANISH FORK CITY CORPORATION

INSTRUMENTATION AND CONTROL
UV SYSTEM P&ID

FILE : 55-20-124_50I-601
JUB PROJ. # : 55-20-124
DRAWN BY: UHB
DESIGN BY: BH
CHECKED BY: SR

ONE INCH
AT FULL SIZE, IF NOT ONE INCH, SCALE ACCORDINGLY

LAST UPDATED: 6/30/2022

DRAWING:
50-I-601

SHEET: 565 OF 691


Plot Date:6/30/2022 8:13 PM, Plotted By: Pinnaduwa-Hewage, Ranga
Date Created:4/29/2021 C:\PLANTCACHE\181301139_SPNSH FRK MAPLTN WRF DESIGN\PID DWG\55-20-124_50I-601.DWG

FUTURE SERVICE PUMP NO 4

SERVICE PUMP NO 3

SERVICE PUMP NO 2

SERVICE PUMP NO 1

HMI

55-PLC-1000

FIELD

55-VFD-2401
PLANT WATER PUMP NO 4 VFD

55-VFD-2301
PLANT WATER PUMP NO 3 VFD

55-VFD-2201
PLANT WATER PUMP NO 2 VFD

55-VFD-2101
PLANT WATER PUMP NO 1 VFD

ELECTRICAL ROOM

E-STOP
55-HS-2401
PLANT WATER
PUMP NO 4

E-STOP
55-HS-2301
PLANT WATER
PUMP NO 3

E-STOP
55-HS-2201
PLANT WATER
PUMP NO 2

E-STOP
55-HS-2101
PLANT WATER
PUMP NO 1

120VAC

12"-UW (DI01)

8"-UW (DI01)

6"-UW (DI01)

55-VF-2003

55-VF-2005

55-P-2401
FUTURE
PLANT WATER PUMP
NO 4

55-P-2301
PLANT WATER PUMP
NO 3

55-P-2201
PLANT WATER PUMP
NO 2

55-P-2101
PLANT WATER PUMP
NO 1

6"x8"

4"x6"

55-VC-2302

55-VF-2303

55-VC-2202

55-VF-2203

55-VC-2102

55-VF-2103

RADAR

PLANT WATER
WET WELL

10-I-622
TO HEADWORKS

XX-I-XXX
TO SITE
IRRIGATION

20-I-603
TO BNR TRAIN
NO 1

20-I-605
TO BNR TRAIN
NO 2

30-I-607
TO RAS/WAS
CHANNEL

35-I-609
TO RAS PUMPS

TO EXISTING WRF
DEWATERING
BUILDING


J-U-B ENGINEERS, INC.

J-U-B ENGINEERS, INC.
392 E. Winchester St., Suite 300
Salt Lake City, UT 84107
Phone: 801.547.0393
www.jub.com

Subconsultant:

Stantec

Stantec
2890 E Cottonwood Pkwy
Suite 300, Salt Lake City, Ut
84121
Tel: +1.801.617.3200
www.stantec.com


AGENCY

REVIEW


REUSE OF DRAWINGS
J-U-B SHALL RETAIN ALL COMMON LAW, STATUTORY, COPYRIGHT AND OTHER RESERVED RIGHTS OF THESE DRAWINGS, AND THE SAME SHALL NOT BE REUSED WITHOUT J-U-B'S PRIOR WRITTEN CONSENT. ANY REUSE WITHOUT WRITTEN CONSENT BY J-U-B WILL BE AT CLIENTS SOLE RISK AND WITHOUT LIABILITY OR LEGAL EXPOSURE TO J-U-B.


| NO. | DESCRIPTION | BY | APR. | DATE |
|---|---|---|---|---|
| | REVISION | | | |

SPANISH FORK & MAPELTON WRF
SPANISH FORK CITY CORPORATION

INSTRUMENTATION AND CONTROL
UTILITY WATER SYSTEM P&ID

FILE : 55-20-124_55I-601
JUB PROJ. # : 55-20-124
DRAWN BY: ARB
DESIGN BY: BH
CHECKED BY: SR

ONE INCH
AT FULL SIZE, IF NOT ONE INCH, SCALE ACCORDINGLY

LAST UPDATED: 6/30/2022

DRAWING:
55-I-601

SHEET: 566 OF 691


Plot Date:6/30/2022 8:13 PM Plotted By: Pirnadiwa-Hewage, Ranga
Date Created:8/12/2021 C:\PLANTCAD\HE\181301\39_SPNSH FRK MAPLTN WRF DESIGN\PID DWG\55-20-124_55I-601.DWG

## GENERAL SHEET NOTES

1. OFF-SKID PIPELINES FURNISHED AND INSTALLED BY THE CONTRACTOR.
2. FIELD WIRING BY THE CONTRACTOR.

## SHEET KEYNOTES

| | |
|---|---|
| 1 | LCS FIELD LOCATED NEXT TO BLOWER. |
| 3 | FURNISH AND INSTALL SUNSHIELD. |
| 4 | DRAIN VALVE TO BE LOCATED AT LOWEST POINT OF PIPING TO REMOVE CONDENSATE. |
| 5 | FURNISHED AND INSTALLED BY CONTRACTOR. |


J-U-B ENGINEERS, INC.

J-U-B ENGINEERS, INC.
392 E. Winchester St., Suite 300
Salt Lake City, UT 84107
Phone: 801.547.0393
www.jub.com

Subconsultant:

Stantec
Stantec
2890 E Cottonwood Pkwy
Suite 300, Salt Lake City, Ut 84121
Tel: +1.801.617.3200
www.stantec.com


AGENCY

REVIEW


REUSE OF DRAWINGS
J-U-B SHALL RETAIN ALL COMMON LAW, STATUTORY, COPYRIGHT AND OTHER RESERVED RIGHTS OF THESE DRAWINGS, AND THE SAME SHALL NOT BE REUSED WITHOUT J-U-B'S PRIOR WRITTEN CONSENT. ANY REUSE WITHOUT WRITTEN CONSENT BY J-U-B WILL BE AT CLIENTS SOLE RISK AND WITHOUT LIABILITY OR LEGAL EXPOSURE TO J-U-B.


| NO. | DESCRIPTION | BY | APP'L | DATE |
|---|---|---|---|---|
| | REVISION | | | |

# SPANISH FORK & MAPELTON WRF
# SPANISH FORK CITY CORPORATION

## INSTRUMENTATION AND CONTROL
## REAERATION BLOWERS P&ID

| | |
|---|---|
| FILE : | 55-20-124_60I-601 |
| JUB PROJ. # : | 55-20-124 |
| DRAWN BY: | VBK |
| DESIGN BY: | BH |
| CHECKED BY: | SR |

ONE INCH
AT FULL SIZE, IF NOT ONE INCH, SCALE ACCORDINGLY

LAST UPDATED: 6/30/2022

DRAWING:
60-I-601

SHEET: 567 OF 691


Plot Date:6/30/2022 8:13 PM Plotted By: Pinnaduwa-Hewage, Ranga
Date Created:8/12/2021 C:\PLANTCAD\HE1813\01139_SPNISH FRK MAPLTN WRF DESIGN\PID DWG\55-20-124_60I-601.DWG

HMI

55-PLC-1000

AI 2001A | AI 2001B

AIT 2001A | AIT 2001B

AI 2002

55-I-604(A)

55-I-604(B)

I 2002

AIT 2002

FI 2005

FIT 2005

60-I-601
FROM REAERATION BLOWERS

6"-A-(SS02)

6"x4"

60-VF-2203

60-VF-2103

4"-A (SS02)

4"-A (SS02)

50-I-601
FROM UV DISINFECTION

42"-PLE-(DI01)

60-SG-2101

60-SG-2201

AIT 2001

AIT 2002

PH/TEMP

DO

AE 2001

AE 2002

2"-SAM (PV01)

50-I-601
TO COMPOSITE SAMPLER-IN UV BLDG

FIT 2005

42"-PLE (DI01)

42"x30"

60-VF-2005A

M M

FE 2005

METERING VAULT

60-VF-2005B

30"x42"

TO OUTFALL

60-VF-2005C


J-U-B ENGINEERS, INC.

J-U-B ENGINEERS, INC.
392 E. Winchester St., Suite 300
Salt Lake City, UT 84107
Phone: 801.547.0393
www.jub.com

Subconsultant:

Stantec

Stantec
2890 E Cottonwood Pkwy
Suite 300, Salt Lake City, Ut 84121
Tel: +1.801.617.3200
www.stantec.com


AGENCY

REVIEW


REUSE OF DRAWINGS
J-U-B SHALL RETAIN ALL COMMON LAW, STATUTORY, COPYRIGHT AND OTHER RESERVED RIGHTS OF THESE DRAWINGS, AND THE SAME SHALL NOT BE REUSED WITHOUT J-U-B'S PRIOR WRITTEN CONSENT. ANY REUSE WITHOUT WRITTEN CONSENT BY J-U-B WILL BE AT CLIENTS SOLE RISK AND WITHOUT LIABILITY OR LEGAL EXPOSURE TO J-U-B.


| NO. | DESCRIPTION | BY | APR. | DATE |
|---|---|---|---|---|
| | REVISION | | | |

SPANISH FORK & MAPELTON WRF
SPANISH FORK CITY CORPORATION

INSTRUMENTATION AND CONTROL
REAERATION BASIN P&ID

FILE : 55-20-124_60I-602
JUB PROJ. # : 55-20-124
DRAWN BY: VBK
DESIGN BY: BH
CHECKED BY: SR

ONE INCH
AT FULL SIZE, IF NOT ONE INCH, SCALE ACCORDINGLY

LAST UPDATED: 6/30/2022

DRAWING:
60-I-602

SHEET: 568 OF 691


Plot Date:6/30/2022 8:13 PM Plotted By: Pinnaduwa-Hewage, Ranga
Date Created:8/12/2021 C:\PLANTCAD\HE\181301139_SPNSH FRK MAPLTN WRF DESIGN\PID DWG\55-20-124_60I-602.DWG

SLUDGE BLANKET LEVEL

SLUDGE HOLDING TANK LEVEL

SLUDGE FEED PUMP NO 1

SLUDGE FEED PUMP NO 2

HMI

SOLIDS HANDLING PLC

FIELD

70-I-603
LALL
TO BLOWER

70-LCV-1201
VALVE ACTUATOR LCS

70-LCV-1101
VALVE ACTUATOR LCS

70-VFD-1104
SLUDGE FEED PUMP NO 1 VFD

70-VFD-1204
SLUDGE FEED PUMP NO 2 VFD

70-I-606
10"-A (SS02)
FROM AERATION BLOWERS

RADAR

ULTRASONIC

SLUDGE BLANKET

DECANTER

70-TK-1100
SLUDGE HOLDING TANK NO 1

AIR DIFFUSERS

ESTOP
70-HS-1104

70-P-1104
SLUDGE FEED PUMP NO 1

8"-SL (DI02)

TO DEWATERING SCREW PRESS NO 1

ESTOP
70-HS-1204

70-P-1204
SLUDGE FEED PUMP NO 2

BYPASS TO BELT PRESS

30-I-607
FROM WAS PUMPS

70-VP-1107D

70-VP-1107C

6"-WAS (DI02)

70-VP-1203

8"-SL (DI)

TO DRAIN

70-I-602(A)
FROM SOLIDS HOLDING TANK NO 2

VALVE VAULT

70-I-602(B)
FROM SOLIDS HOLDING TANK NO 2

TO DRAIN

6"-WAS (DI02)

TO SOLIDS HOLDING TANK NO 2
70-I-602


J-U-B ENGINEERS, INC.
J-U-B ENGINEERS, INC.
392 E. Winchester St., Suite 300
Salt Lake City, UT 84107
Phone: 801.547.0393
www.jub.com

Subconsultant:
Stantec
Stantec
2890 E Cottonwood Pkwy
Suite 300, Salt Lake City, Ut
84121
Tel: +1.801.617.3200
www.stantec.com


AGENCY

REVIEW


REUSE OF DRAWINGS
J-U-B SHALL RETAIN ALL COMMON LAW STATUTORY, COPYRIGHT AND OTHER RESERVED RIGHTS OF THESE DRAWINGS, AND THE SAME SHALL NOT BE REUSED WITHOUT J-U-B'S PRIOR WRITTEN CONSENT. ANY REUSE WITHOUT WRITTEN CONSENT BY J-U-B WILL BE AT CLIENTS SOLE RISK AND WITHOUT LIABILITY OR LEGAL EXPOSURE TO J-U-B.


| NO. | DESCRIPTION | BY | APR. | DATE |
|---|---|---|---|---|
| | REVISION | | | |

SPANISH FORK & MAPELTON WRF
SPANISH FORK CITY CORPORATION

INSTRUMENTATION AND CONTROL (I)
SOLIDS HOLDING TANK AND SLUDGE FEED PUMPS P&ID

FILE : 55-20-124_70I-601
JUB PROJ. # : 55-20-124
DRAWN BY: VBK
DESIGN BY: BH
CHECKED BY: DS
ONE INCH
AT FULL SIZE, IF NOT ONE INCH, SCALE ACCORDINGLY
LAST UPDATED: 7/6/2022

DRAWING:
70-I-601

SHEET: 569 OF 691


Plot Date:7/6/2022 3:09 PM Plotted By: Pinnadawa-Hewage, Ranga
Date Created:11/16/2021 C:\PLANTCAD\HE\181301\139_SPNSH FRK MAPLTN WRF DESIGN\PID DWG\55-20-124_70I-601.DWG

SLUDGE BLANKET LEVEL

SLUDGE HOLDING TANK LEVEL

HMI

LAHH 1202 | LAH 1202

I 1202

LIT 1202

LAHH 1201 | LAH 1201 | LI 1201 | LAL 1201

70-I-603

LALL TO BLOWER

I 1201

LIT 1201

HMI

SOLIDS HANDLING PLC

FIELD

SOLIDS HANDLING PLC

FIELD

70-I-603

FROM AERATION BLOWERS

10"-A (SS02)

70-VF-1200

RADAR

LE 1201

ULTRASONIC

LE 1202

SLUDGE BLANKET

LIT 1202

LIT 1201

120VAC

DECANTER

8"-WAS (DI02

70-I-601

FROM SLUDGE HOLDING TANK NO 1

6"-WAS (DI02)

6"x8"

70-VP-1107A

70-VP-1107B

6"-WAS (PV03

70-TK-1200
SLUDGE HOLDING TANK NO 2

AIR DIFFUSERS

TO DRAIN

8"-SL (DI)

70-I-601(A)

TO SLUDGE FEED PUMPS

8"-DR (DI02)

70-I-601(B)

TO VALVE VAULT

6"-WAS (PV03)

BYPASS TO DEWATERING SCREW PRESS

Plot Date:7/6/2022 3:40 PM Plotted By: PrimadAwa Hewage, Ranga
Date Created:11/16/2021 C:\PLANTCAD\HE\181301139_SPNSH FRK MAPLTN WRF DESIGN\PID DWG\55-20-124_70I-602.DWG


J-U-B ENGINEERS, INC.

J-U-B ENGINEERS, INC.
392 E. Winchester St., Suite 300
Salt Lake City, UT 84107
Phone: 801.547.0393
www.jub.com

Subconsultant:

Stantec

Stantec
2890 E Cottonwood Pkwy
Suite 300, Salt Lake City, Ut
84121
Tel: +1.801.617.3200
www.stantec.com


AGENCY

REVIEW


REUSE OF DRAWINGS
J-U-B SHALL RETAIN ALL COMMON LAW, STATUTORY, COPYRIGHT AND OTHER RESERVED RIGHTS OF THESE DRAWINGS, AND THE SAME SHALL NOT BE REUSED WITHOUT J-U-B'S PRIOR WRITTEN CONSENT. ANY REUSE WITHOUT WRITTEN CONSENT BY J-U-B WILL BE AT CLIENTS SOLE RISK AND WITHOUT LIABILITY OR LEGAL EXPOSURE TO J-U-B.


| NO. | DESCRIPTION | BY | APP. | DATE |
|---|---|---|---|---|
| | REVISION | | | |

SPANISH FORK & MAPELTON WRF
SPANISH FORK CITY CORPORATION

INSTRUMENTATION AND CONTROL (I)
SOLIDS HOLDING TANK NO 2 - P&ID

FILE : 55-20-124_70I-602
JUB PROJ. # : 55-20-124
DRAWN BY: VBK
DESIGN BY: BH
CHECKED BY: DS

ONE INCH
AT FULL SIZE, IF NOT ONE INCH, SCALE ACCORDINGLY

LAST UPDATED: 7/6/2022

DRAWING:
70-I-602

SHEET: 570 OF 691

AERATION BLOWER NO 1

AERATION BLOWER NO 2

AERATION BLOWER NO 3

HMI

SOLIDS HANDLING PLC

FIELD

70-VFD-3101
AERATION BLOWER NO 1 VFD

70-VFD-3201
AERATION BLOWER NO 2 VFD

70-VFD-3301
AERATION BLOWER NO 3 VFD

70-I-601
SLUDGE TANK
LALL CUT OFF

70-I-602
SLUDGE TANK
LALL CUT OFF

ATM

70-FLTR-3101

70-ME-3101A

70-P-3101
AERATION BLOWER NO 1

70-ME-3101B

70-VC-3101

70-VF-3102

AERATION BLOWER NO 1 SKID

70-FLTR-3201

70-ME-3201A

70-P-3201
AERATION BLOWER NO 2

70-ME-3201B

70-VC-3201

70-VF-3202

AERATION BLOWER NO 2 SKID

70-FLTR-3301

70-ME-3301A

70-P-3301
AERATION BLOWER NO 3

70-ME-3301B

70-VC-3301

70-VF-3302

AERATION BLOWER NO 3 SKID

12"-A (SS02)

12"x10"

10"-A (SS02)

70-I-601
TO SLUDGE HOLDING TANK NO 1

TO SOLIDS HOLDING TANK NO 2
70-I-602

## SHEET KEYNOTES

| | |
|---|---|
| 1 | AERATION BLOWER VENDOR FURNISH EQUIPMENT. |


J-U-B ENGINEERS, INC.

J-U-B ENGINEERS, INC.
392. E. Winchester St., Suite 300
Salt Lake City, UT 84107
Phone: 801.547.0393
www.jub.com

Subconsultant:

Stantec
Stantec
2890 E Cottonwood Pkwy
Suite 300, Salt Lake City, Ut
84121
Tel: +1.801.617.3200
www.stantec.com


AGENCY

REVIEW


REUSE OF DRAWINGS
J-U-B SHALL RETAIN ALL COMMON LAW, STATUTORY, COPYRIGHT AND OTHER RESERVED RIGHTS OF THESE DRAWINGS, AND THE SAME SHALL NOT BE REUSED WITHOUT J-U-B'S PRIOR WRITTEN CONSENT. ANY REUSE WITHOUT WRITTEN CONSENT BY J-U-B WILL BE AT CLIENTS SOLE RISK AND WITHOUT LIABILITY OR LEGAL EXPOSURE TO J-U-B.


| NO. | DESCRIPTION | BY | APR | DATE |
|---|---|---|---|---|
| | REVISION | | | |

SPANISH FORK & MAPELTON WRF
SPANISH FORK CITY CORPORATION

INSTRUMENTATION AND CONTROL (I)
AERATION BLOWERS P&ID

| | |
|---|---|
| FILE : | 55-20-124_70I-603 |
| JUB PROJ. # : | 55-20-124 |
| DRAWN BY: | VBK |
| DESIGN BY: | BH |
| CHECKED BY: | DS |

ONE INCH
AT FULL SIZE, IF NOT ONE INCH, SCALE ACCORDINGLY

LAST UPDATED: 7/6/2022

DRAWING:
70-I-603

SHEET: 571 OF 691


Plot Date:7/6/2022 3:41 PM, Plotted By: Pinnadawa-Hewage, Ranga
Date Created:11/16/2021 C:\PLANTCAD\HE\181301\09_SPNSH FRK MAPLTN WRF DESIGN\PID DWG\55-20-124_70I-603.DWG

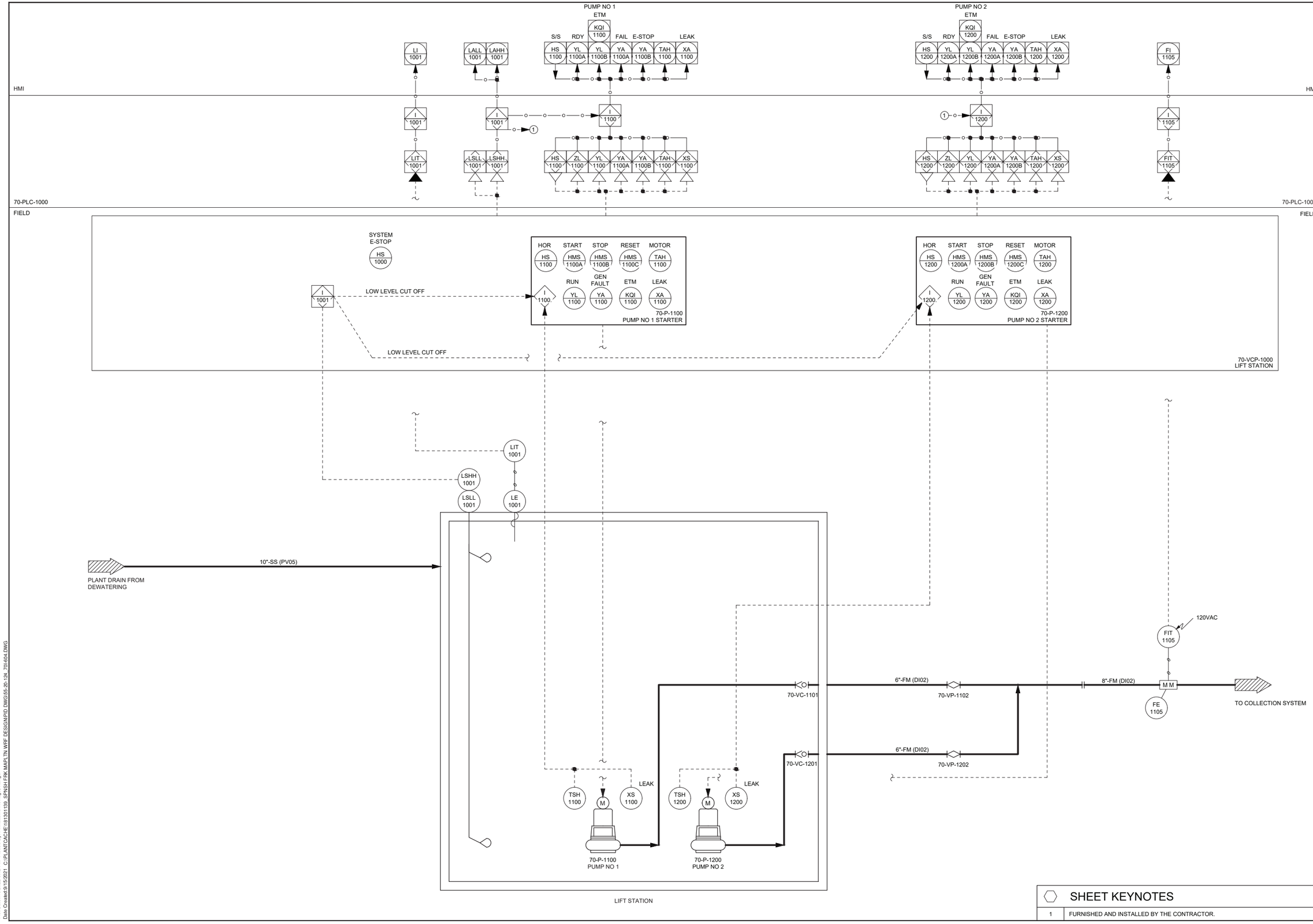


## SHEET KEYNOTES

| | |
|---|---|
| 1 | FURNISHED AND INSTALLED BY THE CONTRACTOR. |


J-U-B ENGINEERS, INC.

J-U-B ENGINEERS, INC.
392. E. Winchester St., Suite 300
Salt Lake City, UT 84107
Phone: 801.547.0393
www.jub.com

Subconsultant:

Stantec
Stantec
2890 E Cottonwood Pkwy
Suite 300, Salt Lake City, Ut
84121
Tel: +1.801.617.3200
www.stantec.com


AGENCY

REVIEW


REUSE OF DRAWINGS
J-U-B SHALL RETAIN ALL COMMON LAW, STATUTORY, COPYRIGHT AND OTHER RESERVED RIGHTS OF THESE DRAWINGS, AND THE SAME SHALL NOT BE REUSED WITHOUT J-U-B'S PRIOR WRITTEN CONSENT. ANY REUSE WITHOUT WRITTEN CONSENT BY J-U-B WILL BE AT CLIENTS SOLE RISK AND WITHOUT LIABILITY OR LEGAL EXPOSURE TO J-U-B.


| NO. | DESCRIPTION | BY | APP. | DATE |
|---|---|---|---|---|
| | REVISION | | | |

SPANISH FORK & MAPELTON WRF
SPANISH FORK CITY CORPORATION

INSTRUMENTATION AND CONTROL
LIFT STATION - P&ID

FILE : 55-20-124_70I-604
JUB PROJ. # : 55-20-124
DRAWN BY: VBK
DESIGN BY: BH
CHECKED BY: SR
ONE INCH
AT FULL SIZE, IF NOT ONE INCH, SCALE ACCORDINGLY
LAST UPDATED: 7/6/2022

DRAWING:
70-I-604

SHEET: 572 OF 691


Plot Date:7/6/2022 3:42 PM Plotted By: Pimsadwa-Hewage, Ranga
Date Created:9/15/2021 C:\PLANTCACHE\181301139_SPNSH FRK MAPLTN WRF DESIGN\PID DWG\55-20-124_70I-604.DWG