SINGLE LINE DIAGRAM SYMBOLOGY

MEDIUM VOLTAGE VACUUM DRAWOUT STARTER

52 — MEDIUM VOLTAGE DRAWOUT BREAKER

LOC — THERMAL MAGNETIC CIRCUIT BREAKER
X = LOCATION
100 — FRAME (AMPS)
20 — TRIP (AMPS)

LOC — MCP CIRCUIT BREAKER
X = LOCATION
7 — CONTINUOUS AMPS
MCP — TRIP SETTING BASED ON MOTOR HORSEPOWER

LOW VOLTAGE DRAWOUT CIRCUIT BREAKER
800 / 400
(L-S-I-G)
L LONG TIME
S SHORT TIME
I INSTANTANEOUS
G GROUND FAULT

X — COMBINATION NEMA RATED STARTER WITH MCP DISCONNECT AND CONTROL POWER TRANSFORMER
40 MCP
ROMAN NUMERAL = NEMA SIZE
X = LOCATION
* = STARTER TYPE
(BLANK) FULL VOLTAGE NON-REVERSING
FVR FULL VOLTAGE REVERSING
2S2W TWO SPEED TWO WINDING
2S1W TWO SPEED ONE WINDING
*

X / VFD — VARIABLE FREQUENCY DRIVE
X = AMPERE RATING

X / RVSS — REDUCED VOLTAGE SOLID STATE STARTER
X = AMPERE RATING

X / Y — PACKAGED EQUIPMENT
X = EQUIPMENT SIZE
Y = TYPE (KW, KVA, OR HP AS INDICATED)

K — KEY INTERLOCK

GENERATOR
RATINGS AS INDICATED

TRANSFER SWITCH (MANUAL OR AUTOMATIC)
RATINGS AS INDICATED

AS — AMMETER SWITCH

VS — VOLTMETER SWITCH

X — METERING DEVICE
X = METER TYPE
WHM WATT HOUR METER
WM WATT METER
AM AMMETER
VM VOLTMETER
PFM POWER FACTOR METER

480/120 / {3} — POTENTIAL TRANSFORMER
RATIO AND NUMBER OF PT'S AS INDICATED

100/5 / {3} — CURRENT TRANSFORMER
RATIO AND NUMBER OF CT'S AS INDICATED

GROUND FAULT CURRENT TRANSFORMER
RATIO AS INDICATED

5A — FUSE
SIZE AS INDICATED

X * — MOTOR
X = HORSEPOWER
* = FULL LOAD AMPS

DELTA-WYE TRANSFORMER WITH
SECONDARY KVA SIZE AND VOLTAGE
RATIO AS INDICATED

X AMPS
Y SECONDS
51G — DELTA-WYE TRANSFORMER
WITH RESISTANCE GROUNDED
SECONDARY AND GROUND
FAULT RELAYING
X - GROUNDING RESISTOR AMPS
Y - GROUNDING RESISTOR SECONDS

FUSED CONTROL POWER TRANSFORMER

MOV — ELECTRICAL MOTOR OPERATED VALVE, WITH INTEGRAL REVERSING STARTER

30A — DISCONNECT SWITCH
SIZE AS INDICATED

30A / 30A — FUSED DISCONNECT SWITCH
SIZE AS INDICATED

CAPACITOR

SPD — SURGE PROTECTIVE DEVICE

SSM — SOLID STATE METERING DEVICE

SSMP — SOLID STATE MOTOR PROTECTIVE DEVICE

LIGHTNING ARRESTOR AND SURGE CAPACITOR

(#) — ANSI RELAY DEVICE
(#) = QUANTITY
* = ANSI DEVICE
25 SYNCHRONISM CHECK RELAY
27 UNDERVOLTAGE
27/47 UNDERVOLTAGE, PHASE SEQUENCE, UNBALANCED VOLTAGE
32 DIRECTIONAL POWER RELAY
41 FIELD CONTACTOR
43 SELECTOR SWITCH
49 HIGH OIL TEMPERATURE
50/51 INSTANTANEOUS AND TIME OVERCURRENT
50/51N INSTANTANEOUS AND TIME RESIDUALLY CONNECTED GROUND OVERCURRENT
51G GROUND FAULT
60 VOLTAGE BALANCE
62 TIME DELAY
63 SUDDEN PRESSURE
67 AC DIRECTIONAL CURRENT RELAY
71L LOW OIL LEVEL
81 FREQUENCY RELAY
83 CONTROL POWER TRANSFORMER
86 LOCKOUT
87TL TRANSFORMER DIFFERENTIAL
87M MOTOR DIFFERENTIAL

REV 010119

SCHEMATIC DIAGRAM SYMBOLOGY

L O R — THREE - POSITION SELECTOR SWITCH

L R — TWO - POSITION SELECTOR SWITCH

THREE - POSITION SPRING RETURN-TO-CENTER MOMENTARY CONTACT SWITCH

SINGLE POLE TOGGLE SWITCH

VACUUM OR PRESSURE SWITCH
CLOSE ON RISING PRESSURE

VACUUM OR PRESSURE SWITCH
OPEN ON RISING PRESSURE

FLOAT LEVEL SWITCH
CLOSE ON RISING LEVEL

FLOAT LEVEL SWITCH
OPEN ON RISING LEVEL

NORMALLY OPEN

NORMALLY CLOSED

NORMALLY OPEN HELD CLOSED

NORMALLY CLOSED HELD OPEN

MAINTAINED POSITION

TEMPERATURE SWITCH
CLOSE ON RISING TEMPERATURE

TEMPERATURE SWITCH
OPEN ON RISING TEMPERATURE

FLOW SWITCH
CLOSE ON INCREASING FLOW

FLOW SWITCH
OPEN ON INCREASING FLOW

TORQUE SWITCH
OPEN ON INCREASING TORQUE

1 — LOCATION SYMBOL
LEGEND SHOWN ON SCHEMATIC DRAWINGS
ALL DEVICES ARE LOCATED IN THE MCC
UNLESS INDICATED OTHERWISE

DI — DIGITAL INPUT TO PLC/RTU/DCS

DIGITAL OUTPUT FROM PLC/RTU/DCS
NORMALLY OPEN

DIGITAL OUTPUT FROM PLC/RTU/DCS
NORMALLY CLOSED

AI — ANALOG INPUT TO PLC/RTU/DCS
4-20 mA (UNLESS INDICATED OTHERWISE)

AO — ANALOG OUTPUT FROM PLC/RTU/DCS
4-20 mA (UNLESS INDICATED OTHERWISE)

SV — SOLENOID VALVE

SOLENOID VALVE

E-STOP PUSHBUTTON

X — CONTROL RELAY OR COIL
X = DEVICE
CR CONTROL RELAY
TD TIME DELAY RELAY
(TIMING RANGE AS INDICATED)
M MOTOR STARTER
PC PHOTOCELL

NORMALLY OPEN CONTACT

NORMALLY CLOSED CONTACT

XXXX — NORMALLY OPEN CONTACT LINE REFERENCE

XXXX — NORMALLY CLOSED CONTACT LINE REFERENCE

TIMED CONTACTS
CONTACT ACTION IS DELAYED AFTER COIL IS:

ENERGIZED

TD1 — NORMALLY OPEN WITH TIME DELAY CLOSING

TD1 — NORMALLY CLOSED WITH TIME DELAY OPENING

DE-ENERGIZED

TD1 — NORMALLY OPEN WITH INSTANT CLOSING AND TIME DELAY OPENING

TD1 — NORMALLY CLOSED WITH INSTANT OPENING AND TIME DELAY CLOSING

START — NORMALLY OPEN PUSHBUTTON

STOP — NORMALLY CLOSED PUSHBUTTON

OFF ON — NO/NC MAINTAINED PUSHBUTTON

X — PILOT LIGHT
X = LENS COLOR
R RED
G GREEN
A AMBER
W WHITE

X — PILOT LIGHT (PUSH-TO-TEST)
X = LENS COLOR (SEE ABOVE)

HORN

ETM — ELAPSED TIME METER

HEATER

GROUND CONNECTION

CROSSING OF CONDUCTORS - NOT CONNECTED

CROSSING OF CONDUCTORS - CONNECTED

FUSE

VOLTAGE SURGE SUPPRESSOR

J-U-B ENGINEERS, INC.
J-U-B ENGINEERS, INC.
392 E. Winchester St., Suite 300
Salt Lake City, UT 84107
Phone: 801.547.0393
www.jub.com

Subconsultant:
Stantec
Stantec
2890 E Cottonwood Pkwy
Suite 300, Salt Lake City, Ut 84121
Tel: +1.801.617.3200
www.stantec.com

AGENCY

REVIEW

REUSE OF DRAWINGS
J-U-B SHALL RETAIN ALL COMMON LAW, STATUTORY, COPYRIGHT AND OTHER RESERVED RIGHTS OF THESE DRAWINGS, AND THE SAME SHALL NOT BE REUSED WITHOUT J-U-B'S PRIOR WRITTEN CONSENT. ANY REUSE WITHOUT WRITTEN CONSENT BY J-U-B WILL BE AT CLIENTS SOLE RISK AND WITHOUT LIABILITY OR LEGAL EXPOSURE TO J-U-B.

NO.	DESCRIPTION	BY	APP'L	DATE
	REVISION			

SPANISH FORK & MAPLETON WRF
SPANISH FORK CITY CORPORATION

ELECTRICAL
SYMBOLS - I

FILE : 55-20-124_00E-001
JUB PROJ. # : 55-20-124
DRAWN BY: KES
DESIGN BY: KES
CHECKED BY: SK
ONE INCH
AT FULL SIZE, IF NOT ONE INCH, SCALE ACCORDINGLY
LAST UPDATED: 7/6/2022

DRAWING:
00-E-001

SHEET: 573 OF 691

Plot Date:7/6/2022 5:50 PM Plotted By: Thakare, Ashish
Date Created:6/30/2022 C:\PW_WORKING\WTR\ATHAKARE\D0149714\55-20-124_00E-001.DWG

PLAN SYMBOLOGY

RECEPTACLES

X-#
120V DUPLEX RECEPTACLE, NEMA CONFIGURATION
5-20R (WALL MOUNT)
X = PANELBOARD DESIGNATION
# = CIRCUIT DESIGNATION
* = TYPE
WP WEATHERPROOF
XP EXPLOSION PROOF
GFCI GROUND FAULT CIRCUIT INTERRUPTER

120V DUPLEX RECEPTACLE, NEMA CONFIGURATION
5-20R (FLOOR MOUNT)

X
SINGLE SPECIAL PURPOSE RECEPTACLE, 240V 1 PHASE
X = AMPERAGE

X
WELDING RECEPTACLE
X = AMPERAGE

X
SPECIAL PURPOSE RECEPTACLE, 480 VAC
X = AMPERAGE

TELEPHONE OUTLET - FLOOR TYPE

TELEPHONE OUTLET - WALL TYPE

COMPUTER/DATA OUTLET - FLOOR TYPE

COMPUTER/DATA OUTLET - WALL TYPE

CONDUIT AND RACEWAY SYMBOLOGY

EXPOSED OR CONCEALED CONDUIT

CONDUIT RUN (UNDERGROUND OR IN CONCRETE)

CONDUIT RUN (CHANGE IN ELEVATION)

CONDUIT TURNING UP

CONDUIT TURNING DOWN

CONDUITS GROUPED TOGETHER BUT
SHOWN AS A SINGLE LINE FOR CLARITY

CONDUIT FROM FLOOR ABOVE TO FLOOR BELOW

CONDUIT CAPPED, OR SEALED

HOMERUN TO EQUIPMENT INDICATED
(3/4 " CONDUIT, 2 #12, 1 #12 GND
UNLESS INDICATED OTHERWISE)

X
RACEWAY BOX
X = BOX TYPE
MH MANHOLE
HH HANDHOLE
PB PULLBOX

J
JUNCTION BOX OR FITTING

MISCELLANEOUS ELECTRICAL SYMBOLOGY

POWER PANEL

DISCONNECT SWITCH

M
MOTOR

T
THERMOSTAT

HORN

COMBINATION STARTER

$M
MANUAL MOTOR STARTER

REV 010119

FIRE PROTECTION SYMBOLOGY

F
FIRE ALARM HORN WITH STROBE

A F
FIRE ALARM LOUDSPEAKER WITH AMPLIFIER

FA
FIRE ALARM PULL STATION

F
FIRE ALARM STROBE

F
FIRE ALARM BELL WITH STROBE

FS
FIRE SUPPRESSION SWITCH

ER
END-OF-LINE TERMINATOR

*
DETECTOR
X = TYPE
SD SMOKE DETECTOR
HD HEAT DETECTOR
CD COMBINATION DETECTOR

SECURITY & COMM SYSTEMS SYMBOLOGY

I *
INTERCOM SPEAKER
* = TYPE (REFER TO SPECIFICATIONS)

I *
INTERCOM SPEAKER WITH STROBE LIGHT
* = TYPE (REFER TO SPECIFICATIONS)

I
INTERCOM WALL JACK

HS I
INTERCOM HANDSET - WALL MOUNTED

VC *
VIDEO CAMERA
* = TYPE
F FIXED
PTZ PAN-TILT-ZOOM

*
SECURITY ACCESS DEVICE
* = TYPE
CR CARD READER
KS KEY SWITCH
PS DIGITAL KEYPAD

LIGHTING SYMBOLOGY

A
X-#a
PENDANT OR CEILING MOUNT LUMINAIRE
A = LUMINARE TYPE
X = LIGHTING PANEL DESIGNATION
# = CIRCUIT NUMBER
a = SWITCH DESIGNATION

PENDANT OR CEILING MOUNT LUMINAIRE - UNSWITCHED
(NIGHT LIGHT)

WALL MOUNTED LUMINAIRE

POLE, BRACKET, ARM, AND STREETLIGHT

LINEAR LUMINAIRE

LINEAR LUMINAIRE - UNSWITCHED

EMERGENCY LUMINAIRE
BATTERY OPERATED

EXIT LIGHT, ARROW INDICATE DIRECTION
OF EXIT, SHADING INDICATES FACE

A
*
LUMINAIRE CALLOUT
A = LUMINAIRE TYPE
* = APPROXIMATE MOUNTING HEIGHT AFF
CLG = CEILING MOUNT
(SEE LUMINAIRE SCHEDULE FOR MORE DETAILS)

$ X-#a
*
LIGHT SWITCH
X = LIGHTING PANEL DESIGNATION
# = CIRCUIT DESIGNATION
a = SWITCH DESIGNATION
* = SWITCH TYPE
3 3-WAY
4 4-WAY
D DIMMER
M MANUAL MOTOR STARTER

LIGHTING PANEL

GROUNDING SYMBOLOGY

GROUND ROD AND GROUND WELL

GROUND ROD (3/4" X 10'-0")

GROUND CONNECTION - BOLTED TYPE

GROUND CONNECTION - EXOTHERMIC TYPE

BARE COPPER GROUND TO GROUND WIRE IN SLAB, OR
UNDERGROUND GROUND GRID, SIZE AS NOTED

EARTH GROUNDING

J-U-B ENGINEERS, INC.
J-U-B ENGINEERS, INC.
392. E. Winchester St., Suite 300
Salt Lake City, UT 84107
Phone: 801.547.0393
www.jub.com

Subconsultant:
Stantec
Stantec
2890 E Cottonwood Pkwy
Suite 300, Salt Lake City, Ut
84121
Tel: +1.801.617.3200
www.stantec.com

AGENCY

REVIEW

REUSE OF DRAWINGS
J-U-B SHALL RETAIN ALL COMMON LAW, STATUTORY, COPYRIGHT AND OTHER RESERVED RIGHTS OF THESE DRAWINGS, AND THE SAME SHALL NOT BE REUSED WITHOUT J-U-B'S PRIOR WRITTEN CONSENT. ANY REUSE WITHOUT WRITTEN CONSENT BY J-U-B WILL BE AT CLIENTS SOLE RISK AND WITHOUT LIABILITY OR LEGAL EXPOSURE TO J-U-B.

NO.	DESCRIPTION	BY	APP'L	DATE
	REVISION			

SPANISH FORK & MAPLETON WRF
SPANISH FORK CITY CORPORATION

ELECTRICAL
SYMBOLS - II

FILE : 55-20-124 00E-002
JUB PROJ. # : 55-20-124
DRAWN BY: KES
DESIGN BY: KES
CHECKED BY: SK
ONE INCH
AT FULL SIZE, IF NOT ONE INCH, SCALE ACCORDINGLY
LAST UPDATED: 7/6/2022

DRAWING:
00-E-002

SHEET: 574 OF 691

Plot Date:7/6/2022 5:52 PM, Plotted By: Thakare, Ashish
Date Created:6/30/2022 C:\PW_WORKING\WTR\ATHAKARE.D0149714\55-20-124_00E-002.DWG

ELECTRICAL ABBREVIATIONS

A	AMPERE, AUTOMATIC
AC	ALTERNATING CURRENT
AF	CIRCUIT BREAKER FRAME SIZE
AM	AMMETER
ANN	ANNUNCIATOR
AS	ADJUSTABLE SPEED
AT	AMPERE TRIP
ATS	AUTOMATIC TRANSFER SWITCH
AUTO	AUTOMATIC
AWG	AMERICAN WIRE GAUGE
BATT	BATTERY
BC	BARE COPPER
BKR	BREAKER
C	CONDUIT, CLOSED
CAP	CAPACITOR
CB	CIRCUIT BREAKER
CKT	CIRCUIT
CLF	CURRENT LIMITING FUSE
CO	CONDUIT ONLY
COM	COMMON
COMM	COMMUNICATIONS
COMP	COMPARTMENT
CP	CONTROL PANEL
CPT	CONTROL POWER TRANSFORMER
CR	CONTROL RELAY, CARD READER
CT	CURRENT TRANSFORMER
DB	DUCTBANK
DCS	DISTRIBUTED CONTROL SYSTEM
DISC, DS	DISCONNECT
DISTR	DISTRIBUTION
DPDT	DOUBLE POLE DOUBLE THROW
DPST	DOUBLE POLE SINGLE THROW
E	EMERGENCY
EMT	ELECTRICAL METALLIC TUBING
ENCL	ENCLOSURE
ETM	ELAPSED TIME METER
F	FREQUENCY, FUSE, FIXED
FDR	FEEDER
FLA	FULL LOAD AMPS
FLUOR	FLUORESCENT
FM	FREQUENCY METER
FO	FIBER OPTIC
FVR	FULL VOLTAGE REVERSING
FVNR	FULL VOLTAGE NON-REVERSING
GEN	GENERATOR
GFCI	GROUND FAULT CIRCUIT INTERRUPTER
GND	GROUND
H	HAND
HD	HEAT DETECTOR
HH	HAND HOLE
HID	HIGH INTENSITY DISCHARGE
HOA	HAND-OFF-AUTOMATIC
HPS	HIGH PRESSURE SODIUM
HS	HAND SWITCH
HZ	HERTZ
IMC	INTERMEDIATE METALLIC CONDUIT
INCAND	INCANDESCENT
IND	INDICATION
INST	INSTANTANEOUS
I/O	INPUT/OUTPUT
Isc	SHORT CIRCUIT CURRENT, AMPS
ISO	ISOLATION
J, JB	JUNCTION BOX
KA	KILO AMPERES
KAIC	KILO AMP INTERRUPTING CURRENT
KCMIL	KILO CIRCULAR MILS
KVA	KILOVOLT AMPERE
L	LOCAL
LCP	LOCAL CONTROL PANEL
LCS	LOCAL CONTROL STATION
LOC	LOCAL
LOR	LOCAL-OFF-REMOTE
LOS	LOCKOUT STOP PUSHBUTTON
LP	LIGHTING PANEL
LRA	LOCKED ROTOR AMPS
LS	LEVEL SWITCH
LTG	LIGHTING
LTS	LIGHTS

M	MOTOR CONTACTOR COIL
mA	MILLIAMPERE
MCP	MOTOR CIRCUIT PROTECTOR
MLO	MAIN LUGS ONLY
MOV	MOTOR OPERATED VALVE
MS	MANUAL MOTOR STARTER
MTS	MANUAL TRANSFER SWITCH
NEUT	NEUTRAL
NP	NAMEPLATE
O	OPEN, OFF
OL	OVERLOAD
PA	PUBLIC ADDRESS
PB	PUSHBUTTON, PULLBOX
PC	PHOTOCELL
PCM	PROCESS CONTROL MODULE
PF	POWER FACTOR
PFM	POWER FACTOR METER
PH	PHASE
PL	PILOT LIGHT
PNLBD	PANELBOARD
PP	POWER PANELBOARD
POS	POSITION
POT	POTENTIOMETER
PRI	PRIMARY
PT	POTENTIAL TRANSFORMER
PTZ	PAN-TILT-ZOOM
PWR	POWER
R	REMOTE
RECPT	RECEPTACLE
RGS	RIGID GALVANIZED STEEL
RMS	ROOT MEAN SQUARE
RTU	REMOTE TERMINAL UNIT
RVSS	REDUCED VOLTAGE SOLID STATE
SEL SW	SELECTOR SWITCH
SEQ	SEQUENCE
SHLD	SHIELDED
SIG	SIGNAL
SP	SPARE
SP HTR	SPACE HEATER
SPDT	SINGLE POLE DOUBLE THROW
SPST	SINGLE POLE SINGLE THROW
SSM	SOLID STATE METER
SSMP	SOLID STATE MOTOR PROTECTOR
ST, SH	SHUNT TRIP
STR	STARTER
SSTU	SOLID STATE TRIP UNIT
SW	SWITCH
SWBD	SWITCHBOARD
SWGR	SWITCHGEAR
TACH	TACHOMETER
TB	TERMINAL BOX
TERM	TERMINAL
TM	REPEAT CYCLE TIMER
TD	TIME DELAY RELAY
TS	TEMPERATURE SWITCH
UPS	UNINTERRUPTIBLE POWER SUPPLY
V	VOLTAGE, VOLTS
VA	VOLT AMPERE
VAR	VOLT AMPERE REACTIVE
VFD	VARIABLE FREQUENCY DRIVE
VM	VOLTMETER
VP	VAPOR PROOF
W	WATTS, WIRE
WM	WATT METER
WP	WEATHERPROOF
XFMR	TRANSFORMER
XMTR	TRANSMITTER
XP	EXPLOSION PROOF

REV 010119

GENERAL ELECTRICAL NOTES

1. ALL RACEWAYS AND EQUIPMENT SHALL BE INSTALLED AND GROUNDED IN ACCORDANCE WITH THE 2020 EDITION OF THE NATIONAL ELECTRICAL CODE AND APPLICABLE LOCAL CODES.
2. THE CONTRACTOR SHALL VERIFY THE EXACT LOCATION OF TERMINAL BOXES AND CONDUIT ENTRANCES OF ALL EQUIPMENT AGAINST APPROVED SHOP DRAWINGS BEFORE STUBBING UP CONDUITS.
3. REFER TO SPECIFICATION SECTION 260533 FOR REQUIREMENTS RELATED TO FLEXIBLE CONDUIT INSTALLATION
   CONDUIT RUNS ARE SHOWN DIAGRAMMATICALLY ONLY AND SHALL BE INSTALLED IN A MANNER TO PREVENT CONFLICTS WITH EQUIPMENT OR STRUCTURAL CONDITIONS. EXPOSED CONDUIT SHALL BE INSTALLED PARALLEL OR PERPENDICULAR TO BEAMS AND WALLS. REFER TO SPECIFICATION SECTION 260533.
4. CONDUIT STUB-UPS SHALL NOT BE MORE THAN 6 INCHES FROM THE CENTERLINE OF TERMINAL BOXES.
5. IN THE EVENT OF INTERFERENCE BETWEEN ELECTRICAL EQUIPMENT SHOWN ON THE DRAWINGS AND OTHER EQUIPMENT, THE CONTRACTOR SHALL NOTIFY THE ENGINEER IN WRITING AND THE ENGINEER SHALL APPROVE PROPOSED CHANGES BEFORE THEY ARE MADE.
6. ALL SURFACE MOUNTED PANELS AND PANELBOARDS ON THE INTERIOR OF EXTERIOR WALLS ABOVE GRADE OR IN OTHER LOCATIONS CONSIDERED DAMP OR WET SHALL BE MOUNTED SO AS TO MAINTAIN A 1/4 INCH (MINIMUM) AIR SPACE BETWEEN THE ENCLOSURE AND THE WALL.
7. LOCATION OF PULLBOXES ARE APPROXIMATE. THE CONTRACTOR SHALL COORDINATE EXACT LOCATION WITH MECHANICAL PIPING AND SHALL BE 6 INCHES (MINIMUM) AWAY FROM MECHANICAL PIPING FLOW LINES.
8. ONLY MAJOR PULLBOXES ARE SHOWN. THE CONTRACTOR SHALL PROVIDE ADDITIONAL PULLBOXES WHERE REQUIRED TO MAKE A WORKABLE INSTALLATION.
9. THE WORK SHALL BE PERFORMED IN ACCORDANCE WITH THE DETAILS WHETHER OR NOT THEY ARE REFERENCED ON THE DRAWINGS.
10. ALL CONDUIT RUNS CROSSING EXPANSION JOINTS SHALL HAVE EXPANSION OR EXPANSION AND DEFLECTION TYPE FITTINGS. FOR LOCATIONS OF EXPANSION JOINTS, REFER TO THE STRUCTURAL DWGS.
11. LUMINAIRES SHALL BE MOUNTED ACCORDING TO THE MOUNTING HEIGHT GIVEN ON THE DRAWINGS, WITH THE DISTANCE BEING MEASURED FROM THE BOTTOM OF THE LUMINAIRE TO THE FINISHED FLOOR. THE APPROPRIATE MOUNTING BRACKETS AND HARDWARE SHALL BE SUPPLIED.
12. ALL PANELBOARDS SHALL BE MOUNTED SO THAT THE DISTANCE FROM THE CENTERLINE OF THE TOP CIRCUIT BREAKER OPERATING HANDLE IN THE UPPERMOST POSITION TO THE FINISHED FLOOR SHALL NOT EXCEED 6'-7".
13. THE WIRING DIAGRAMS, QUANTITY AND SIZE OF WIRES AND CONDUIT REPRESENT A SUGGESTED ARRANGEMENT BASED UPON SELECTED STANDARD COMPONENTS OF ELECTRICAL EQUIPMENT. MODIFICATIONS ACCEPTABLE TO THE ENGINEER MAY BE MADE BY THE CONTRACTOR TO ACCOMMODATE EQUIPMENT ACTUALLY PURCHASED. THE BASIC SEQUENCE AND METHOD OF CONTROL MUST BE MAINTAINED AS INDICATED ON THE DRAWINGS AND/OR SPECIFICATIONS.
14. CONNECTIONS BETWEEN RIGID CONDUIT AND MOTOR TERMINAL BOXES OR SIMILAR EQUIPMENT SUBJECT TO VIBRATION SHALL BE FLEXIBLE LIQUID-TIGHT CONDUIT.
15. CONDUITS SHALL BE TERMINATED SO AS TO PERMIT NEAT CONNECTION TO MOTORS AND OTHER EQUIPMENT.
16. CONDUITS FOR FUTURE EQUIPMENT OR EXTENSIONS SHALL BE TERMINATED AS SHOWN IN DETAIL OR AS SPECIFIED.
17. MCC AND SWITCHGEAR COMPARTMENT DESIGNATIONS SHALL BE AS FOLLOWS:

    BLANK/SPACE: CONTAINS NECESSARY BUS AND HARDWARE FOR FUTURE ADDITION OF BREAKERS OR STARTERS.

    SPARE: CONTAINS A COMPLETE INSTALLED BREAKER OR STARTER AVAILABLE FOR FUTURE USE.
18. ALL MOTOR STARTER CONTROL POWER TRANSFORMERS SHALL BE SIZED TO PROVIDE SUFFICIENT VOLT-AMPERE CAPACITY FOR OPERATING ALL LOCAL AND REMOTE ELECTRICAL DEVICES ASSOCIATED WITH CONTROL OF THE MOTOR IN ADDITION TO THE STARTER COIL.
19. MOTOR CONTROL CENTERS AND ALL FREE STANDING PANELS SHALL BE SET ON CONCRETE HOUSEKEEPING PADS WITH LEVELING CHANNELS EMBEDDED IN THE PAD.
20. ALL RECEPTACLES IN OUTDOOR AND ANTICIPATED WET AREAS SHALL BE GROUND FAULT CIRCUIT INTERRUPTER RECEPTACLES WITH WEATHERPROOF COVERS.
21. ELECTRICAL CONTRACTOR SHALL VISIT THE SITE PRIOR TO BIDDING THE PROJECT TO VERIFY THE SCOPE OF WORK WITH FIELD CONDITIONS. PARTICULAR ATTENTION SHOULD BE GIVEN TO NEW CONDUIT RUNS IN EXISTING BUILDINGS.
22. EQUIPMENT LOCKOUTS SHALL BE IN STRICT ACCORDANCE WITH OWNER'S REQUIREMENTS.
23. FOR LIGHTING AND RECEPTACLE SYSTEMS, ONLY CIRCUIT NUMBERS ARE SHOWN. CONTRACTOR SHALL PROVIDE ALL NECESSARY CONDUITS, WIRES, FITTINGS, JUNCTION BOXES AND ALL NECESSARY COMPONENTS SHOWN OR NOT SHOWN ON THE DRAWINGS, TO MAKE THE ELECTRICAL INSTALLATION COMPLETE AND OPERATIONAL. ALL CONDUIT RUNS SHALL BE CONCEALED UNLESS INDICATED OTHERWISE. CIRCUIT LOADING SHALL BE AS INDICATED IN THE PANEL SCHEDULES. ALL LIGHTING AND RECEPTACLE CIRCUITS SHALL INCLUDE GROUND WIRE.
24. HVAC TEMPERATURE CONTROL WIRING SHALL BE THE RESPONSIBILITY OF THE TEMPERATURE CONTROLS SUBCONTRACTOR UNDER DIVISION 23, AND IS NOT SHOWN ON THE ELECTRICAL DRAWINGS. 120, 208, AND 480 VOLT POWER WIRING SHALL BE PROVIDED AS INDICATED AND AS A PART OF THE ELECTRICAL DIVISION 26 WORK.

LIGHTNING PROTECTION NOTES

1. GENERAL
   A SYSTEM OF LIGHTNING PROTECTION SHALL BE PROVIDED AND INSTALLED IN COMPLIANCE WITH THE PROVISIONS OF THE LATEST EDITION OF NFPA 780 LIGHTNING PROTECTION CODE AS ADOPTED BY THE NATIONAL FIRE PROTECTION ASSOCIATION.
2. AIR TERMINALS
   AIR TERMINALS SHALL BE 1/2IN x 24IN SOLID COPPER AND SHALL EXTEND AT LEAST 18 INCHES ABOVE THE TOP OF THE TANK. AIR TERMINALS BASES SHALL BE CAST BRONZE WITH STAINLESS STEEL BOLT PRESSURE CABLE CONNECTIONS.
3. CONDUCTORS
   CONDUCTORS SHALL CONSIST OF U.L. LISTED 29 STRANDS OF 17 GAUGE COPPER WIRE WEIGHING 190 LBS. PER 1000 FEET AND INSTALLED IN ACCORDANCE WITH THE U.L. CODE. (CLASS 1)
4. GROUND TERMINALS
   ALL GROUNDING TERMINALS (RODS) SHALL BE NO LESS THAN 3/4 IN DIA AND 10 FT LONG, AND SHALL BE COPPER-CLAD STEEL OR SOLID COPPER. GROUND TERMINALS SHALL BE DRIVEN TO A MINIMUM DEPTH OF 10 FT. GROUNDING TERMINALS SHALL BE LOCATED AT THE BASE OF THE STRUCTURE AND GROUND CONNECTIONS SHALL BE MADE AROUND THE PERIMETER OF THE STRUCTURE AND IN NO CASE SHALL AVERAGE OVER 100 FT APART.
5. CABLE CONNECTORS
   ALL CABLE CONNECTORS SHALL BE CAST BRONZE WITH SCREW TYPE STAINLESS STEEL BOLTS AND NUTS. CONDUCTOR FASTENERS SHALL BE AN APPROVED TYPE OF NON-CORROSIVE METAL, HAVE AMPLE STRENGTH TO SUPPORT CONDUCTORS AND SHALL BE SPACED 3 FT ON CENTERS.
6. INTERCONNECTION OF METALS
   ALL METAL BODIES WITHIN 6 FT OF THE CONDUCTOR SHALL BE BONDED TO THE SYSTEM WITH APPROVED FITTINGS AND CONDUCTORS. CONNECTIONS BETWEEN DISSIMILAR METALS SHALL BE MADE WITH APPROVED BIMETALLIC CONNECTIONS. PRIMARY BONDS FOR CONDUCTING METAL BODIES SHALL BE BONDED WITH APPROPRIATE FITTINGS AND FULL SIZE CONDUCTORS, AND SHALL CONSIST OF, BUT NOT LIMITED TO THE FOLLOWING: LADDER AND RAIL SYSTEMS, TANK VENTS AND PIPING. ALUMINUM TO COPPER CONNECTIONS SHALL BE MADE WITH BIMETALLIC CONNECTORS.
7. COMMON GROUNDING
   ALUMINUM TO COPPER CONNECTIONS SHALL BE MADE WITH BIMETALLIC CONNECTORS. GROUNDS FOR ELECTRICAL AND TELEPHONE SERVICES, AND LIGHTNING GROUNDS SHALL BE TIED TOGETHER TO FORM A COMMON GROUND.
8. MATERIALS
   ALL LIGHTNING PROTECTION EQUIPMENT SHALL BE MANUFACTURED BY HEARY BROTHERS LIGHTNING PROTECTION CO., THOMPSON LIGHTNING PROTECTION CO., CAPITAL LIGHTNING PROTECTION CO., OR EQUAL.
9. LOCATION
   INSTALL LIGHTNING PROTECTION AT THE FOLLOWING FACILITIES:
   A. HEADWORKS BUILDING
   B. MBR/BNR BASINS
   C. MBR SUPPORT BUILDING
   D. UV BUILDING
   E. GENERATOR SWITCHGEAR AND GENERATORS

ELECTRICAL DEMOLITION NOTES

1. BIDDING CONTRACTORS SHALL VISIT THE SITE TO ASSESS THE SCOPE OF DEMOLITION, REMOVAL AND MODIFICATION WORK.
2. ELECTRICAL CONTRACTOR AND THE OWNER SHALL DE-ENERGIZE ALL WIRING PRIOR TO REMOVAL OF EQUIPMENT, DEVICES, MOTORS INSTRUMENTATION, CONTROL PANELS, ETC. CONTRACTOR SHALL OBTAIN PRIOR APPROVAL FROM THE OWNER.
3. EXPOSED RACEWAYS: REMOVE CONDUIT, WIRES, AND BOXES. PATCH TO MATCH EXISTING. FINISH-ALL OPENINGS IN WALLS AND FLOORS
4. CONCEALED CONDUITS IN THE SLAB: REMOVE EXISTING WIRES TO THE EXTENT POSSIBLE AND ABANDON CONDUITS IN THE SLAB. CUT CONDUIT FLUSH AND PATCH THE FLOOR TO MATCH EXISTING
5. CONTROL PANEL: ELECTRICAL CONTRACTOR SHALL DE-ENERGIZE AND REMOVE ALL CONDUIT AND WIRE AS DESCRIBED IN NOTE 2. CONTRACTOR SHALL REMOVE PANELS AS NOTED ON THE CONTRACT DRAWINGS. REFER TO NOTE 4 ABOVE FOR DISPOSITION OF ENCASED CONDUITS.
6. MOTOR CONTROL CENTERS: DISCONNECT AND REMOVE ALL CONDUITS AND WIRING TO EXISTING STARTERS AND/OR BREAKERS, PANELBOARDS, BRANCH CIRCUITS, INTERLOCKS AND STATUS WIRING WITHIN MCC. REFER TO SECTION 260000 FOR ADDITIONAL ELECTRICAL DEMOLITION AND REMOVAL REQUIREMENTS.

J-U-B ENGINEERS, INC.

J-U-B ENGINEERS, INC.
392 E. Winchester St., Suite 300
Salt Lake City, UT 84107
Phone: 801.547.0393
www.jub.com

Subconsultant:

Stantec
Stantec
2890 E Cottonwood Pkwy
Suite 300, Salt Lake City, Ut
84121
Tel: +1.801.617.3200
www.stantec.com

AGENCY

REVIEW

REUSE OF DRAWINGS
J-U-B SHALL RETAIN ALL COMMON LAW, STATUTORY, COPYRIGHT AND OTHER RESERVED RIGHTS OF THESE DRAWINGS, AND THE SAME SHALL NOT BE REUSED WITHOUT J-U-B'S PRIOR WRITTEN CONSENT. ANY REUSE WITHOUT WRITTEN CONSENT BY J-U-B WILL BE AT CLIENTS SOLE RISK AND WITHOUT LIABILITY OR LEGAL EXPOSURE TO J-U-B.

NO.	DESCRIPTION	BY	APP'L	DATE
	REVISION			

SPANISH FORK & MAPLETON WRF
SPANISH FORK CITY CORPORATION

ELECTRICAL
NOTES AND ABBREVIATIONS

FILE : 55-20-124_00E-003
JUB PROJ. # : 55-20-124
DRAWN BY: KES
DESIGN BY: KES
CHECKED BY: SK

ONE INCH
AT FULL SIZE, IF NOT ONE INCH, SCALE ACCORDINGLY

LAST UPDATED: 7/6/2022

DRAWING:
00-E-003

SHEET: 575 OF 691

Plot Date:7/6/2022 5:54 PM Plotted By: Thakare, Ashish
Date Created:6/30/2022 C:\PW_WORKING\WTR\ATHAKARE\D0149714\55-20-124_00E-003.DWG

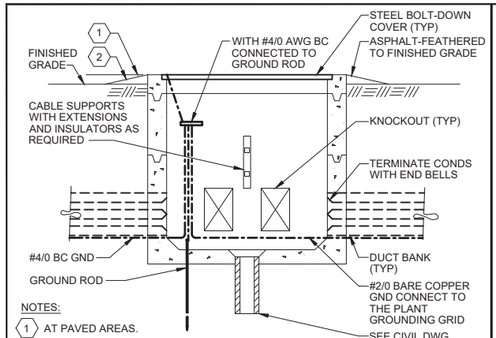

NOTES:

1. AT PAVED AREAS.
2. UNPAVED AREAS.
3. PULL BOX INSTALLATION TO BE WATERTIGHT AFTER CONDUITS HAVE BEEN INSTALLED BY USING DUCT SEALING.
4. FOR MANHOLE/PULL BOX NOT SHOWN WITH DRAINAGE PIPING ON CIVIL DRAWINGS, PROVIDE A MINIMUM 4" DIAMETER PVC PIPE TO A 3'x3'x3' DRAIN ROCK PIT.

E-102 TYPICAL MANHOLE/ PULLBOX
REV 010119

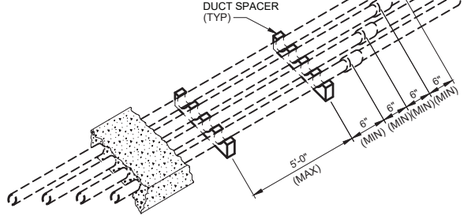

E-108 TYPICAL DUCTBANK
JOINT/SUPPORT SPACING
REV 010119

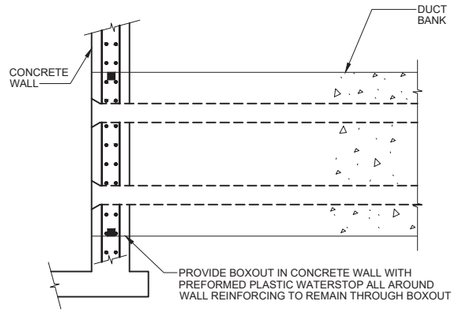

NEW STRUCTURES

NOTES:

1. NO DUCTBANKS OR CONDUIT SHALL PENETRATE THROUGH ANY WALL FOOTINGS OR GRADE BEAMS WHEN ENTERING OR LEAVING STRUCTURES.
2. ALL DUCTBANKS SHALL BE DOWELED INTO STRUCTURES USING THE DETAILS SHOWN ON THIS SHEET.
3. WHERE DUCTBANKS PASS BENEATH FOOTINGS OF EXISTING BUILDING, THE FOOTING SHALL BE UNDERPINNED OR OTHERWISE PROTECTED FROM SETTLEMENT OR OTHER DAMAGE. OVER EXCAVATION BENEATH FOOTINGS DURING DUCTBANK INSTALLATION SHALL BE REPLACED WITH LEAN CONCRETE.
4. FOR STRUCTURES ASSIGNED TO SEISMIC DESIGN CATEGORY A OR B, REINFORCING CAN BE DRILLED AND GROUTED PER THE "EXISTING STRUCTURES" DETAIL.

E-109 DUCTBANK TIE IN
REV 010119

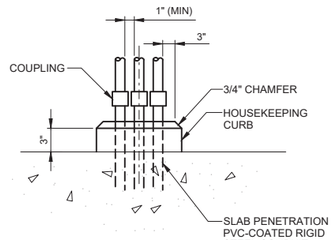

NOTE:

HOUSEKEEPING CURB REQUIRED AT ALL LOCATIONS FOR SINGLE AND MULTIPLE RISERS.

E-203 CONCRETE HOUSEKEEPING CURB
NON-HAZARDOUS LOCATIONS
REV 010119

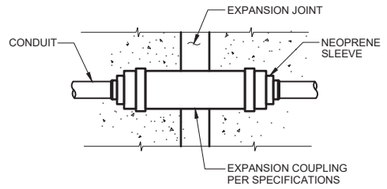

NOTE:

PROVIDE EXTERNAL BONDING JUMPER WITH METALLIC CONDUIT AND WHEN COUPLING HAS NO INTERNAL JUMPER.

E-204 EXPANSION COUPLING
REV 010119

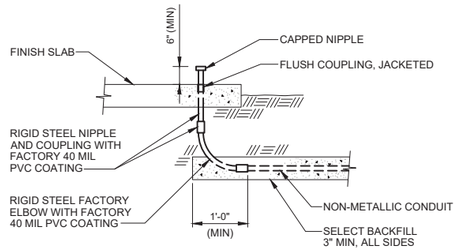

E-205 RISER FROM NON-METALLIC DUCT
REV 010119

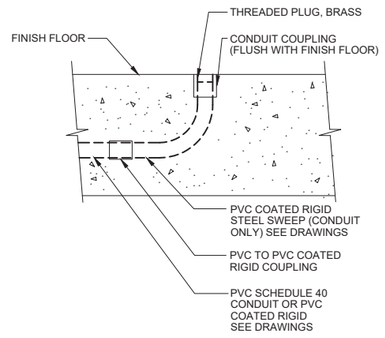

E-206 CONDUIT TERMINATION FOR FUTURE EQUIPMENT
REV 010119

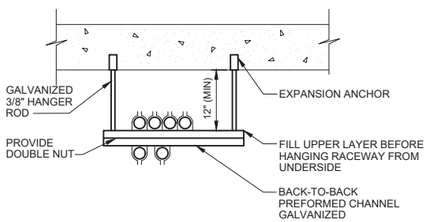

E-207 CONDUIT TRAPEZE
REV 010119

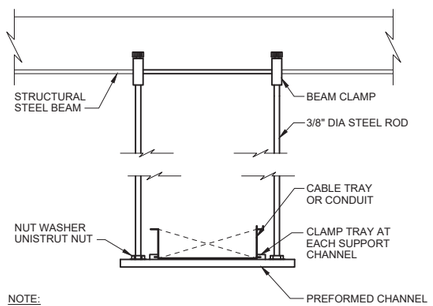

NOTE:

1. SPACING OF TRAY SUPPORTS SHALL BE NO MORE THAN MANUFACTURERS RECOMMENDATIONS AS SUBMITTED AND APPROVED BY ENGINEER.

E-208 TRAY OR CONDUIT HANGER
REV 010119

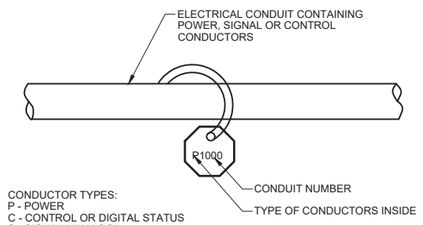

CONDUCTOR TYPES:
P - POWER
C - CONTROL OR DIGITAL STATUS
S - SIGNAL (ANALOG)

CONDUIT NUMBERS ARE LISTED ON THE CONDUIT / CABLE SCHEDULE

NOTE:

1. CONDUIT TAGS SHALL BE AFFIXED TO CONDUITS:
   A. AFTER ALL WORKING DRAWINGS ARE APPROVED AND ALL FIELD MODIFICATIONS HAVE BEEN MADE.
   B. BEFORE FINAL ACCEPTANCE TESTING HAS STARED.

E-210 CONDUIT IDENTIFICATION TAG
REV 010119

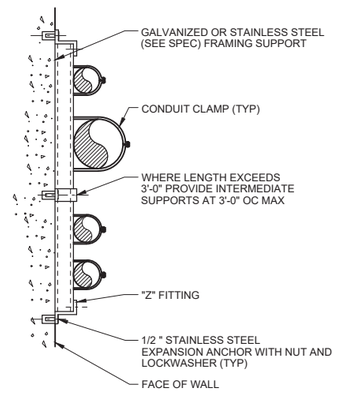

E-212 CONDUIT SUPPORT
FLUSH MOUNT
REV 010119

J-U-B ENGINEERS, INC.
J-U-B ENGINEERS, INC.
392. E. Winchester St., Suite 300
Salt Lake City, UT 84107
Phone: 801.547.0393
www.jub.com

Subconsultant:
Stantec
Stantec
2890 E Cottonwood Pkwy
Suite 300, Salt Lake City, Ut 84121
Tel: +1.801.617.3200
www.stantec.com

AGENCY

REVIEW

REUSE OF DRAWINGS
J-U-B SHALL RETAIN ALL COMMON LAW, STATUTORY, COPYRIGHT AND OTHER RESERVED RIGHTS OF THESE DRAWINGS, AND THE SAME SHALL NOT BE REUSED WITHOUT J-U-B'S PRIOR WRITTEN CONSENT. ANY REUSE WITHOUT WRITTEN CONSENT BY J-U-B WILL BE AT CLIENTS SOLE RISK AND WITHOUT LIABILITY OR LEGAL EXPOSURE TO J-U-B.

NO.	DESCRIPTION	BY	APP'D	DATE
	REVISION			

SPANISH FORK & MAPLETON WRF
SPANISH FORK CITY CORPORATION

ELECTRICAL
STANDARD DETAILS - I

FILE : 55-20-124_00E-901
JUB PROJ. # : 55-20-124
DRAWN BY: KES
DESIGN BY: KES
CHECKED BY: SK
ONE INCH
AT FULL SIZE, IF NOT ONE INCH, SCALE ACCORDINGLY
LAST UPDATED: 7/6/2022

DRAWING:
00-E-901

SHEET: 576 OF 691

Plot Date:7/6/2022 5:57 PM Plotted By: Thakare, Ashish
Date Created:6/30/2022 C:\PW_WORKING\WTR\ATHAKARE\D0149714\55-20-124_00E-901.DWG

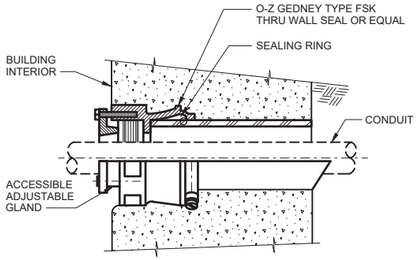

NOTE:
USE WATERTIGHT CONDUIT SEAL WHERE CONDUIT PENTRATIONS OF EXTERIOR WALLS ARE BELOW GRADE.

E-213 WATERTIGHT CONDUIT SEAL
BELOW GRADE EXTERIOR WALLS
REV 010119

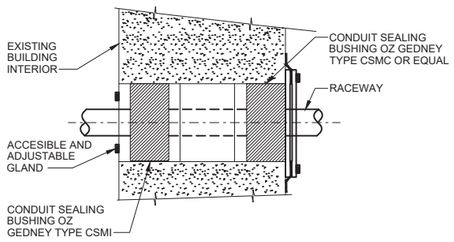

E-214 WATERTIGHT CONDUIT SEAL
REV 010119

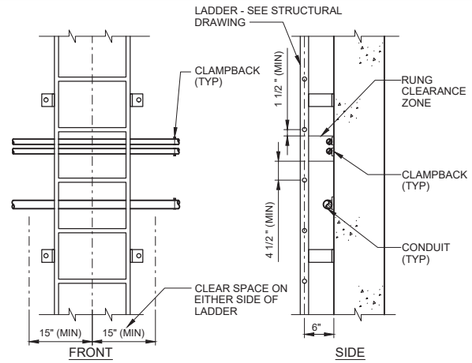

NOTE:
1/2 " CLAMPBACK - DAMP OR BELOW GRADE
1/4 " CLAMPBACK - DRY AND ABOVE GRADE

E-220 MINIMUM LADDER CLEARANCES
REV 010119

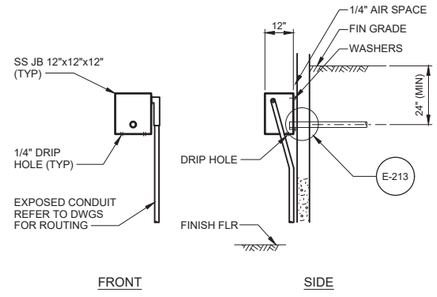

E-226 CONDUIT ENTRANCE
BELOW GRADE
REV 010119

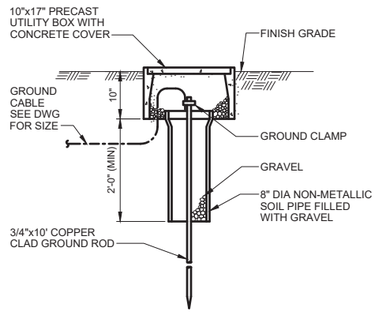

E-303 GROUND ROD AND WELL
REV 010119

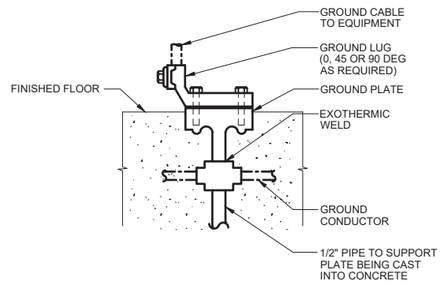

NOTE:
1. ALL BOLTS SHALL BE INSERTED IN BOLT HOLES BEFORE THE INSERT IS EMBEDDED.

E-308 GROUNDING INSERT
REV 010119

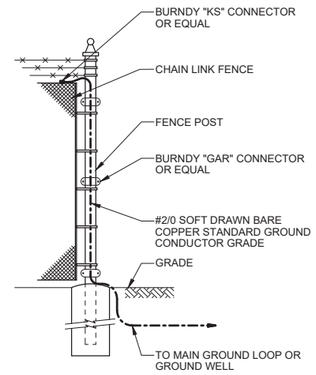

E-316 FENCE GROUNDING
REV 010119

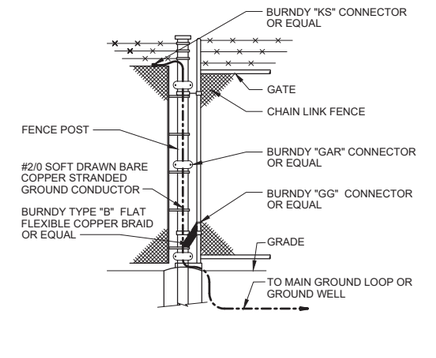

E-317 GATE-TO-FENCE GROUNDING
REV 010119

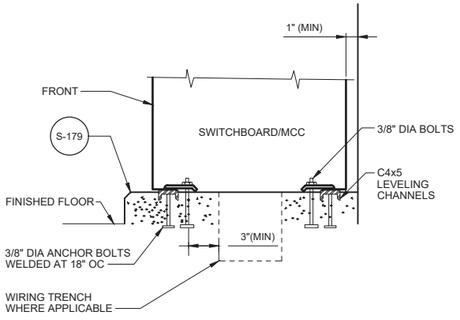

E-400 SWITCHBOARD/MCC MOUNTING
REV 010119

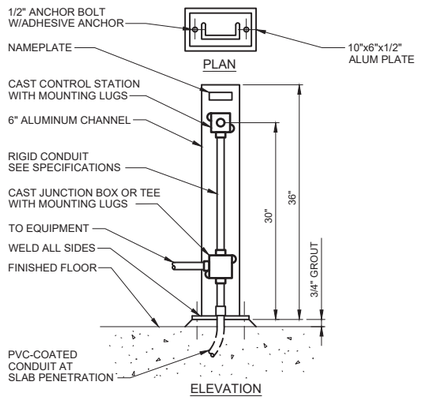

E-406 PEDESTAL MOUNTED CONTROL STATION
REV 010119

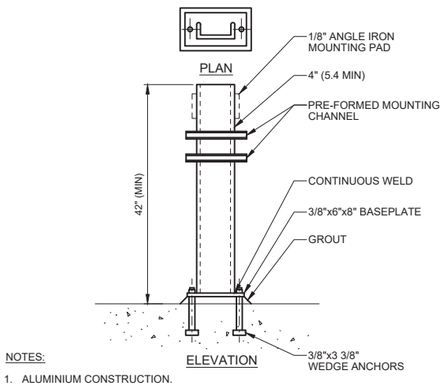

NOTES:
1. ALUMINIUM CONSTRUCTION.
2. PROVIDE MOUNTING ACCESSORY TO SUIT EQUIPMENT.

E-407 PEDESTAL FOR PANEL
REV 010119

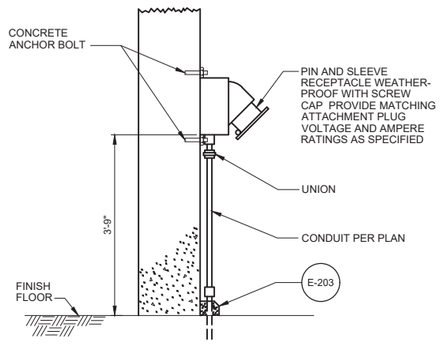

E-419 RECEPTACLE INSTALLATION
REV 010119

J-U-B ENGINEERS, INC.
J-U-B ENGINEERS, INC.
392 E. Winchester St., Suite 300
Salt Lake City, UT 84107
Phone: 801.547.0393
www.jub.com

Subconsultant:
Stantec
Stantec
2890 E Cottonwood Pkwy
Suite 300, Salt Lake City, Ut
84121
Tel: +1.801.617.3200
www.stantec.com

AGENCY

REVIEW

REUSE OF DRAWINGS
J-U-B SHALL RETAIN ALL COMMON LAW, STATUTORY, COPYRIGHT AND OTHER RESERVED RIGHTS OF THESE DRAWINGS, AND THE SAME SHALL NOT BE REUSED WITHOUT J-U-B'S PRIOR WRITTEN CONSENT. ANY REUSE WITHOUT WRITTEN CONSENT BY J-U-B WILL BE AT CLIENTS SOLE RISK AND WITHOUT LIABILITY OR LEGAL EXPOSURE TO J-U-B.

NO.	DESCRIPTION	BY	APP'L	DATE
	REVISION			

SPANISH FORK & MAPLETON WRF
SPANISH FORK CITY CORPORATION

ELECTRICAL
STANDARD DETAILS - II

FILE : 55-20-124_00E-902
JUB PROJ. # : 55-20-124
DRAWN BY: KES
DESIGN BY: KES
CHECKED BY: SK
ONE INCH
AT FULL SIZE, IF NOT ONE INCH, SCALE ACCORDINGLY
LAST UPDATED: 7/6/2022

DRAWING:
00E-902

SHEET: 577 OF 691

Plot Date:7/6/2022 5:59 PM Plotted By: Thakare, Ashish
Date Created:6/30/2022 C:\FW_WORKING\WTR\ATHAKARE\D0149714\55-20-124_00E-902.DWG

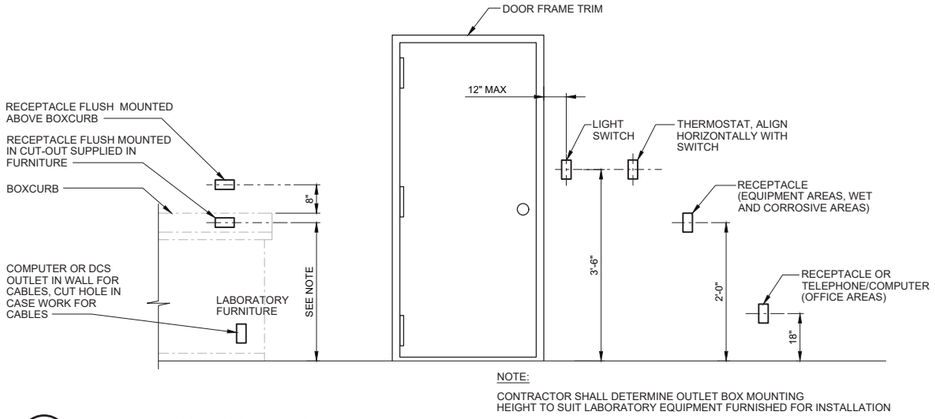

NOTE:

CONTRACTOR SHALL DETERMINE OUTLET BOX MOUNTING HEIGHT TO SUIT LABORATORY EQUIPMENT FURNISHED FOR INSTALLATION

E-450 OUTLET BOX MOUNTING

REV 010119

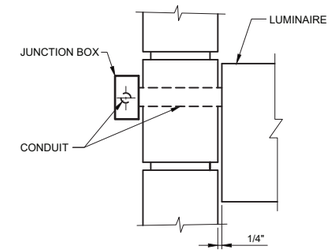

NOTES:

1. PROVIDE GASKET BETWEEN LUMINAIRE AND CONDUIT.
2. INSTALLATION SHALL BE WATERTIGHT.

E-605 WALL MOUNT LUMINAIRE

EXTERIOR WALL

REV 010119

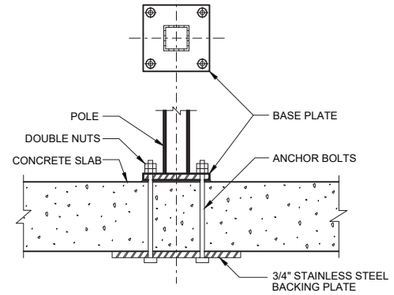

NOTES:

1. BACKING PLATE SHALL BE 6" LARGER, IN BOTH DIRECTIONS, THAN THE BASE PLATE.
2. ALL HARDWARE SHALL BE STAINLESS STEEL.

E-616 POLE MOUNTING ON SLAB

REV 010119

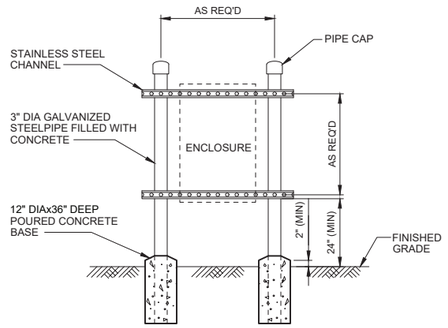

E-420 ENCLOSURE MOUNTING STAND

REV 010119

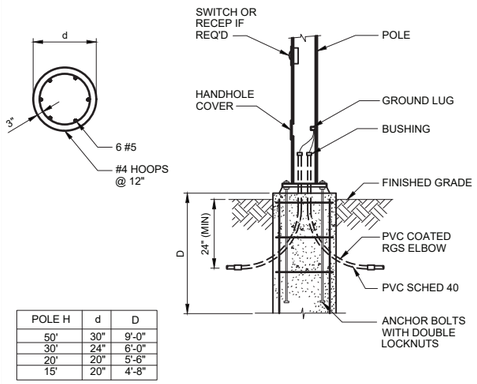

POLE H	d	D
50'	30"	9'-0"
30'	24"	6'-0"
20'	20"	5'-6"
15'	20"	4'-8"

E-600 POLE FOUNDATION

REV 010119

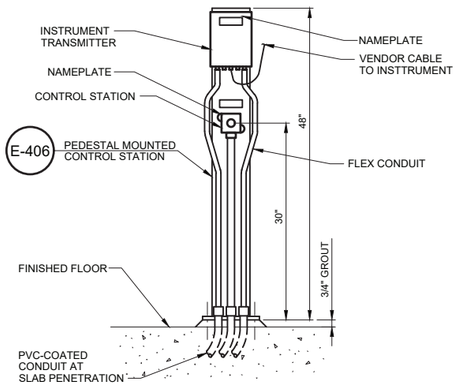

E-900 PEDESTAL MOUNTED CONTROL STATION - MULTI DEVICES

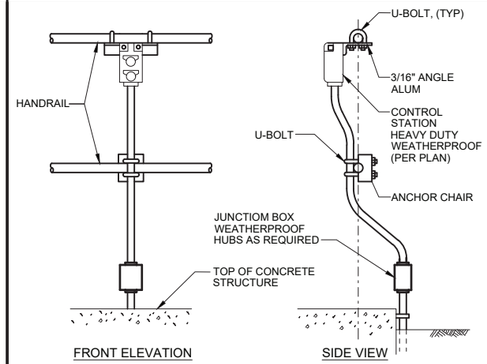

E-901 CONTROL STATION MOUNTING

REV 010119

J-U-B ENGINEERS, INC.
J-U-B ENGINEERS, INC.
392. E. Winchester St., Suite 300
Salt Lake City, UT 84107
Phone: 801.547.0393
www.jub.com

Subconsultant:
Stantec
Stantec
2890 E Cottonwood Pkwy
Suite 300, Salt Lake City, Ut 84121
Tel: +1.801.617.3200
www.stantec.com

AGENCY

REVIEW

REUSE OF DRAWINGS
J-U-B SHALL RETAIN ALL COMMON LAW, STATUTORY, COPYRIGHT AND OTHER RESERVED RIGHTS OF THESE DRAWINGS, AND THE SAME SHALL NOT BE REUSED WITHOUT J-U-B'S PRIOR WRITTEN CONSENT. ANY REUSE WITHOUT WRITTEN CONSENT BY J-U-B WILL BE AT CLIENTS SOLE RISK AND WITHOUT LIABILITY OR LEGAL EXPOSURE TO J-U-B.

NO.	DESCRIPTION	BY	APP'L	DATE
	REVISION			

SPANISH FORK & MAPLETON WRF
SPANISH FORK CITY CORPORATION

ELECTRICAL
STANDARD DETAILS - III

FILE : 55-20-124_00E-903
JUB PROJ. # : 55-20-124
DRAWN BY: KES
DESIGN BY: KES
CHECKED BY: SK

ONE INCH
AT FULL SIZE, IF NOT ONE INCH, SCALE ACCORDINGLY

LAST UPDATED: 7/6/2022

DRAWING:
00-E-903

SHEET: 578 OF 691

Plot Date:7/6/2022 6:02 PM Plotted By: Thakare, Ashish
Date Created:6/30/2022 C:\PW_WD\PKNG\WITR\ATHAKARE.D01497\455-20-124_00E-903.DWG

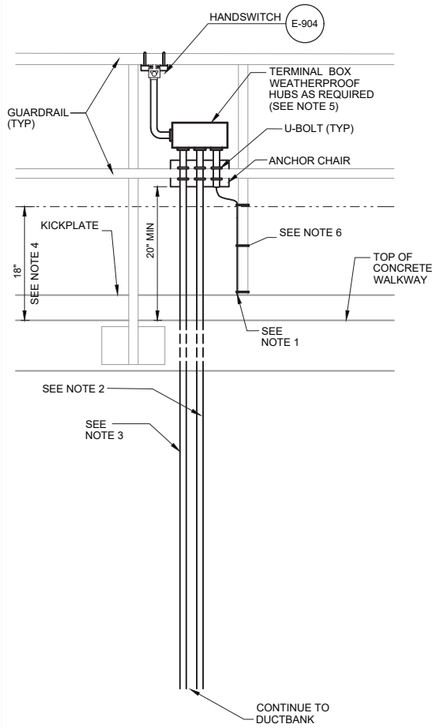

FRONT ELEVATION

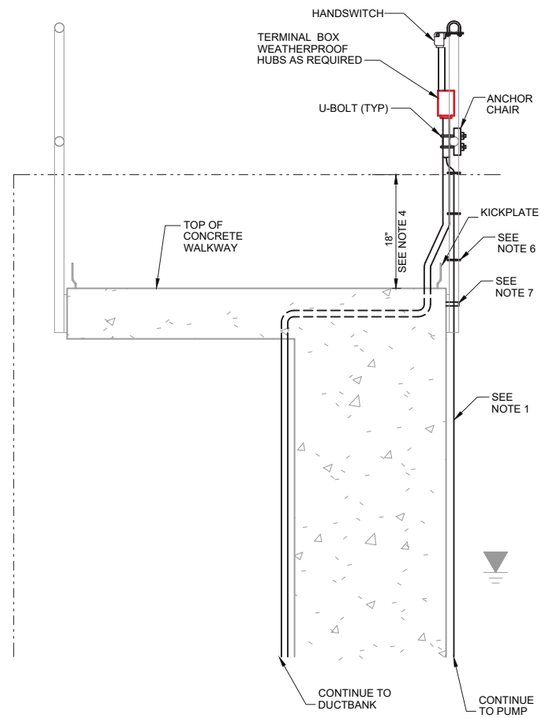

SIDE VIEW

NOTES:

1. PUMP CABLE, NOT IN CONDUIT
2. POWER CONDUIT
3. CONTROL CONDUIT
4. BOUNDARY OF CLASSIFIED AREA. CLASS 1 DIV 2 BELOW BOUNDARY.
5. PROVIDE SCREW TYPE TERMINATION STRIPS AS REQUIRED
6. SECURE CABLE TO GUARDRAIL SUPPORTS
7. SECURE CABLE INSIDE BASIN PER MANUFACTURER DIRECTIONS

E-902 SUBMERSIBLE PUMP CABLE TRANSITION

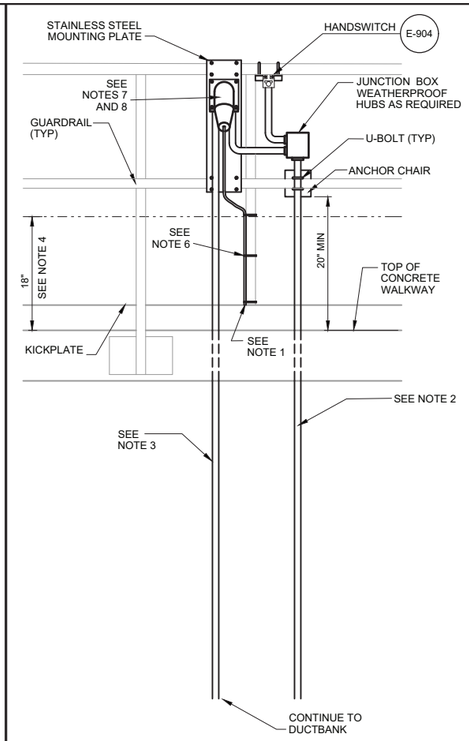

FRONT ELEVATION

NOTES:

1. PUMP CABLE, NOT IN CONDUIT
2. POWER CONDUIT
3. CONTROL CONDUIT
4. BOUNDARY OF CLASSIFIED AREA. CLASS 1 DIV 2 BELOW BOUNDARY.
5. SECURE CABLE TO GUARDRAIL SUPPORTS
6. SECURE CABLE INSIDE BASIN PER MANUFACTURER DIRECTIONS
7. PIN AND SLEEVE RECEPTACLE WEATHER- PROOF WITH SCREW CAP PROVIDE MATCHING ATTACHMENT PLUG VOLTAGE AND AMPERE RATINGS AS REQUIRED.
8. RECEPTACLE SHALL BE MULTIPIN TYPE TO ACCOMODATE POWRE AND CONTROL CABLES FROM MIXER.

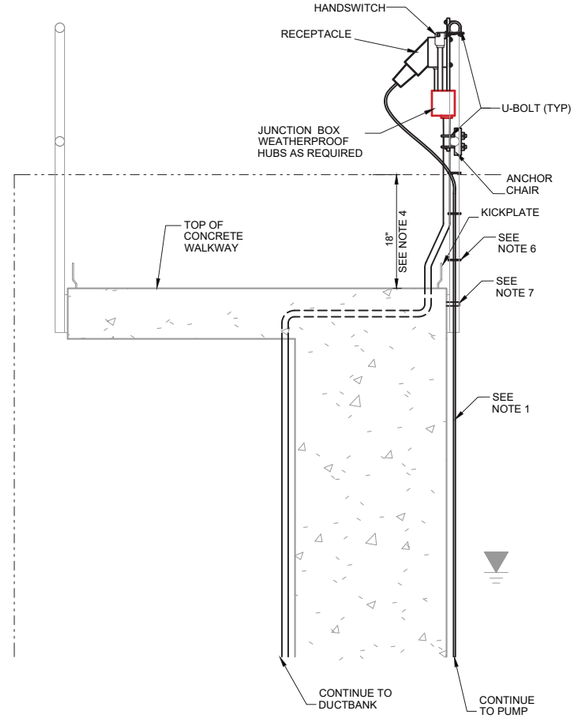

SIDE VIEW

E-903 SUBMERSIBLE MIXER CABLE TRANSITION

J-U-B ENGINEERS, INC.

J-U-B ENGINEERS, INC.
392. E. Winchester St., Suite 300
Salt Lake City, UT 84107
Phone: 801.547.0393
www.jub.com

Subconsultant:

Stantec
Stantec
2890 E Cottonwood Pkwy
Suite 300, Salt Lake City, Ut 84121
Tel: +1.801.617.3200
www.stantec.com

AGENCY

REVIEW

REUSE OF DRAWINGS
J-U-B SHALL RETAIN ALL COMMON LAW, STATUTORY, COPYRIGHT AND OTHER RESERVED RIGHTS OF THESE DRAWINGS, AND THE SAME SHALL NOT BE REUSED WITHOUT J-U-B'S PRIOR WRITTEN CONSENT. ANY REUSE WITHOUT WRITTEN CONSENT BY J-U-B WILL BE AT CLIENTS SOLE RISK AND WITHOUT LIABILITY OR LEGAL EXPOSURE TO J-U-B.

NO.	DESCRIPTION	BY	APP.	DATE
	REVISION			

SPANISH FORK & MAPLETON WRF
SPANISH FORK CITY CORPORATION

ELECTRICAL
STANDARD DETAILS - IV

FILE : 55-20-124 00E-904
JUB PROJ. # : 55-20-124
DRAWN BY: KES
DESIGN BY: KES
CHECKED BY: SK

ONE INCH
AT FULL SIZE, IF NOT ONE INCH, SCALE ACCORDINGLY

LAST UPDATED: 7/6/2022

DRAWING:
00-E-904

SHEET: 579 OF 691

Plot Date:7/6/2022 6:03 PM Plotted By: Thakare, Ashish
Date Created:6/30/2022 C:\PW_WORKING\WTR\ATH\KARE\D0149714\55-20-124_00E-904.DWG

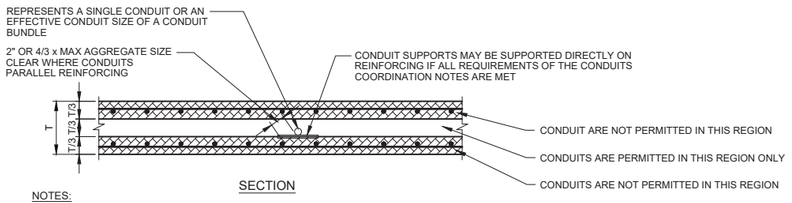

SECTION

NOTES:

1. THIS DETAIL APPLIES FOR ALL REINFORCED CONCRETE SLABS, WALLS AND BEAMS, UNLESS NOTED OTHERWISE.
2. CONDUITS, PIPING, OR OTHER NON-STRUCTURAL ITEMS ARE PROHIBITED FROM BEING LOCATED IN REINFORCED CONCRETE AS SHOWN.

CONDUIT COORDINATION NOTES

REFER TO THE NOTES BELOW, AND ELECTRICAL AND STRUCTURAL DRAWINGS AND SPECIFICATIONS, FOR CONDUIT PLACEMENT REQUIREMENTS. CONDUIT NOT IN CONFORMANCE WITH REQUIREMENTS SHALL NOT BE INSTALLED WITHOUT WRITTEN APPROVAL FROM THE STRUCTURAL ENGINEER OF RECORD.

FOR CONDUIT RUNNING IN THE PLANE OF CONCRETE SLABS OR WALLS:

- THE OUTSIDE DIAMETER OF THE CONDUIT SHALL NOT EXCEED ONE-THIRD OF MEMBER THICKNESS;
- CONDUIT SHALL NOT BE SPACED CLOSER THAN 3 OUTSIDE DIAMETERS ON CENTER;
- CONDUIT SHALL BE LOCATED ONLY WITHIN THE MIDDLE THIRD OF THE MEMBER;
- CONDUIT SHALL NOT BE SUPPORTED DIRECTLY ON REINFORCEMENT.

FOR CONDUIT RUNNING THROUGH THE PLANE OF CONCRETE SLABS OR WALLS:

- COORDINATE CONDUIT PLACEMENT TO AVOID OR MINIMIZE IMPACT ON REINFORCEMENT PLACEMENT.
- CONDUIT SHALL BE 2 INCHES MINIMUM CLEAR OF REINFORCEMENT.
- REINFORCEMENT MAY BE SHIFTED 2 INCHES MAXIMUM TO AVOID CONDUIT.
- WHERE REINFORCEMENT MUST BE CUT TO ACCOMMODATE CONDUIT PLACEMENT, PROVIDE ADDITIONAL REINFORCEMENT PER DETAIL S-144 OR S-148, CONSIDERING THE CONDUIT PENETRATION(S) AS AN EQUIVALENT CIRCULAR OR RECTANGULAR OPENING, RESPECTIVELY.

CONDUIT SHALL NOT BE RUN IN OR THROUGH GRADE BEAMS.
SUPPORTS FOR METALLIC CONDUITS SHALL BE NON-METALLIC.

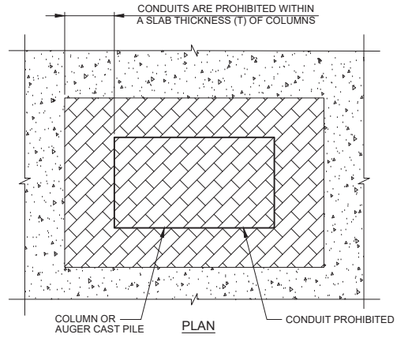

PLAN

CONDUIT TO COLUMN CLEARANCE REQUIREMENTS

E-903 CONDUIT PLACEMENT IN CONCRETE SLABS

J-U-B ENGINEERS, INC.

J-U-B ENGINEERS, INC.
392. E. Winchester St., Suite 300
Salt Lake City, UT 84107
Phone: 801.547.0393
www.jub.com

Subconsultant:

Stantec

Stantec
2890 E Cottonwood Pkwy
Suite 300, Salt Lake City, Ut 84121
Tel: +1.801.617.3200
www.stantec.com

AGENCY

REVIEW

REUSE OF DRAWINGS
J-U-B SHALL RETAIN ALL COMMON LAW, STATUTORY, COPYRIGHT AND OTHER RESERVED RIGHTS OF THESE DRAWINGS, AND THE SAME SHALL NOT BE REUSED WITHOUT J-U-B'S PRIOR WRITTEN CONSENT. ANY REUSE WITHOUT WRITTEN CONSENT BY J-U-B WILL BE AT CLIENTS SOLE RISK AND WITHOUT LIABILITY OR LEGAL EXPOSURE TO J-U-B.

NO.	DESCRIPTION	BY	APP'L	DATE
REVISION				

SPANISH FORK & MAPLETON WRF
SPANISH FORK CITY CORPORATION

ELECTRICAL
STANDARD DETAILS - V

FILE : 55-20-124_00E-905
JUB PROJ. # :55-20-124
DRAWN BY: KES
DESIGN BY: KES
CHECKED BY: SK
ONE INCH
AT FULL SIZE, IF NOT ONE INCH, SCALE ACCORDINGLY
LAST UPDATED: 7/6/2022

DRAWING:
00-E-905

SHEET: 580 OF 691

Plot Date:7/6/2022 6:06 PM Plotted By: Thakare, Ashish
Date Created:6/30/2022 C:\FW_WORKING\WTR\ATHAKARE\D0149714\55-20-124_00E-905.DWG

LUMINAIRE SCHEDULE

TYPE	LAMP WATTAGE	LAMP TYPE	VOLTS	MOUNTING	MANUFACTURER AND CATALOG NUMBER OR APPROVED EQUAL	DESCRIPTION
A1	27W	LED	120V	RECESSED	HOLOPHANE - HVT-2X2-DOP-2600LM-40K-MVOLT-MIN1-80CRI ZT	2' X 2' LED FOR DROP CEILING, LOW PROFILE, WITH BASKET DIFFUSER
A2	36W	LED	120V	RECESSED	HOLOPHANE - HVT-2X2-DOP-3900LM-40K-MVOLT-MIN1-80CRI-ZT	2' X 2' LED FOR DROP CEILING, LOW PROFILE, WITH BASKET DIFFUSER
AL1	-	LED	120V	WALL	FEDERAL SIGNAL - AV1-LED-120-A-LWMB2	WALL MOUNTED COMBINATION AUDIBLE/VISUAL SIGNAL DEVICE RATED FOR OURDOOR USE WITH AMBER STROBE LIGHT AND HORN RATED 85dba @ 10'.
AL2	-	LED	120V	WALL	FEDERAL SIGNAL - 27XST-120-A-WMXC-SB	WALL MOUNTED VISUAL SIGNAL DEVICE FOR USE IN CLASSIFIED ENVIRONMENTS WITH AMBER STROBE LIGHT
C	56.26W	LED	120V	---	LITHONIA - ZL1F-L48-6000LM-MDD-MVOLT-40K-80CRI-WH	48" LOW PROFILE LED STRIPLIGHT, WHITE, UL LISTED FOR DAMP LOCATIONS
D1	73.7W	LED	120V	PENDANT	HOLOPHANE - PXLH-10000LM-WD-MVOLT-40K-80CRI-PM-DWHXD	ROUND, WHITE, UL LISTED FOR CLASS 1 DIV 2, LOWBAY, ALUMINUM HOUSING AND GLASS LENS WITH WIDE DISTRIBUTION
D2	129.78W	LED	120V	PENDANT	HOLOPHANE - PHZ-18000LM-WD-MVOLT--40K-80CRI-PM	ROUND, WHITE, UL LISTED FOR WET LOCATION, HIGH BAY, ALUMINUM HOUSING AND GLASS LENS WITH WIDE DISTRIBUTION
E1	22W	LED	120V	WALL	LITHONIA - INDL-SP2200L-UVOLT-LTP-SDRT-EHO	WALL MOUNTED, TWO LAMP, EMERGENCY LIGHT RATED FOR USE IN WET LOCATION. SEALED LITHIUM IRON PHOSPHATE BATTERY WITH EXTRA HIGH OUTPUT SHALL PROVIDE A MINIMUM OF 90 MINUTE EMERGENCY OPERATION. UNIT SHALL HAVE SELF DIAGNOSTIC AND REMOTE TESTING AND MINIMUM OF 2200 LUMEN OUTPUT
E2	22W	LED	120V	WALL	LITHONIA - EXTL-SP2200L-UVOLT-LTP-SDRT-EHO	WALL MOUNTED, TWO LAMP, EMERGENCY LIGHT IN NEMA 4X ENSLOCURE. SEALED LITHIUM IRON PHOSPHATE BATTERY SHALL PROVIDE A MINIMUM OF 90 MINUTE EMERGENCY OPERATION. UNIT SHALL HAVE SELF DIAGNOSTIC AND REMOTE TESTING AND MINIMUM OF 2200 LUMEN OUTPUT
E3	10.6W	LED	120V	WALL	LITHONIA - ELM6L-UVOLT-LTP-SDRT	WALL MOUNTED, TWO LAMP, EMERGENCY LIGHT. SEALED LITHIUM IRON PHOSPHATE BATTERY SHALL PROVIDE A MINIMUM OF 90 MINUTE EMERGENCY OPERATION. UNIT SHALL HAVE SELF DIAGNOSTIC AND REMOTE TESTING AND MINIMUM OF 1100 LUMEN OUTPUT
E4	7.5W	LED	120V	WALL	KILLARK - EBS23DH-P-N-A	WALL MOUNTED, TWO LAMP, EMERGENCY LIGHT. SEALED NI-CAD BATTERY SHALL PROVIDE A MINIMUM OF 90 MINUTE EMERGENCY OPERATION. UNIT SHALL HAVE PUSH-TO-TEST
F	13.4W	LED	120V	RECESSED	LITHONIA - WF6-LED-30K40K50K-MVOLT-90CRI-MB	6" RECESSED, LED, WAFER STYLE, CANLESS DOWNLIGHT.
F1	13.4W	LED	120V	RECESSED	LITHONIA - WF4-LED-30K40K50K-MVOLT-90CRI-MW	4" RECESSED, LED, WAFER STYLE, CANLESS DOWNLIGHT UL LISTED FOR WET LOCATION.
G	159.4W	LED	120V	PENDANT	EMERSON - CMLED-A-90-2-N-G-W-BU	ROUND, LED FACTORY SEALED, EXPLOSION PROOF, UL LISTED FOR CLASS 1, DIVISION 1 LOCATION, HOUSING AND MOUNTING HOODS OF COPPERFREE CAST ALUMINUM WITH BAKED EPOXY FINISH
P1	35W	LED	120V	POLE	FIXTURE - LITHONIA - KAD LED-20C-530-40K-R2-MVOLT-SPD-DDBXD-PER5-DLL127F1.5 JU POLE - LIGHT POLES PLUS - VA-SSAH-10-4040-C-AB-FP-DB	POLE MOUNTED, SHOEBOX STYLE, LED AREA FIXTURE, DARK BRONZE WITH RECEPTACLE AND PHOTOCELL 4" X 10' SQUARE, STRAIGHT, ALUMINUM POLE WITH HINGED BASE, WIND RATED FOR 100MPH, DARK BRONZE
P2	35W	LED	120V	POLE	FIXTURE - LITHONIA - KAD LED-20C-530-40K-R2-MVOLT-SPD-DDBXD-PER5-DLL127F1.5 JU POLE - LITHONIA - SSA-20-6G-T35-DDBXD	POLE MOUNTED, SHOEBOX STYLE, LED AREA FIXTURE, DARK BRONZE WITH RECEPTACLE AND PHOTOCELL 4" X 20' SQUARE, STRAIGHT, ALUMINUM POLE WIND RATED FOR 100MPH, DARK BRONZE
P3	35W	LED	120V	POLE	FIXTURE - LITHONIA - KAD LED-20C-530-40K-R2-MVOLT-SPD-DDBXD-PER5-DLL127F1.5 JU POLE - LITHONIA - SSA-12-4C-T35-DDBXD	POLE MOUNTED, SHOEBOX STYLE, LED AREA FIXTURE, DARK BRONZE WITH RECEPTACLE AND PHOTOCELL 4" X 12' SQUARE, STRAIGHT, ALUMINUM POLE WIND RATED FOR 100MPH, DARK BRONZE
V	9.5W	LED	120	WALL	LITHONIA -	2' LED, WALL NMOUNTED, VANITY LIGHT
W	62W	LED	120	WALL	KIM - WF21-S-18L3KUV-DBS	WALL MOUNTED, ROUND, HALF FACE, WITH SOLID UPPER HALF, DARK BRONZE
W1	39W	LED	120	WALL	HOLOPHANE - HW4G-3000LM-T3M-MVOLT-40K-DBZXD	WALLPACK, LED, UL LISTED FOR CLASS 1 DIV 2, DARK BRONZE
X1		LED	120V	WALL	HOLOPHANE - DLTL-W-1-R-EL	EXIT SIGN, UL LISTED FOR WET LOCATION. WHITE FACE WITH RED LETTERS, IMPACT-RESISTANT, CORROSION-PROOF, THERMOPLASTIC HOUSING AND RUGGED, HEAVY-DUTY, POLYCARBONATE CLEAR HOUSING LENS. DUAL VOLTAGE INPUT, NICKEL CADMIUM EMERGENCY BATTERY BACK UP.
X2		LED	120V	WALL	HOLOPHANE - MEX-S-W-1-R-ELN	EXIT SIGN, UL LISTED FOR DAMP LOCATION, WHITE FACE WITH RED LETTERS, DIE-CAST ALUMINUM COMPACT HOUSING, BRUSHED ALUMINUM FACEPLATE WITH MATTE BLACK TRIM AND CLEAR LACQUER FINISH . DUAL VOLTAGE INPUT, NICKEL CADMIUM EMERGENCY BATTERY BACK UP.
X3		LED	120V	WALL	HOLOPHANE - HDXE-1-R-12/27-EL-PW	EXIT SIGN, UL LISTED FOR USE IN CLASS 1 DIV 1 LOCATION. SINGLE FACE WITH RED LETTERS, ALUMINUM BODY CONSTRUCTION WITH BAKED-ON EPOXY FINISH, ONE-PIECE SILICONE GASKET AND ACRYLIC SIGN. DUAL VOLTAGE INPUT, NICKEL CADMIUM EMERGENCY BATTERY BACK UP.

J-U-B ENGINEERS, INC.

J-U-B ENGINEERS, INC.
392. E. Winchester St., Suite 300
Salt Lake City, UT 84107
Phone: 801.547.0393
www.jub.com

Subconsultant:

Stantec
Stantec
2890 E Cottonwood Pkwy
Suite 300, Salt Lake City, Ut 84121
Tel: +1.801.617.3200
www.stantec.com

AGENCY

REVIEW

REUSE OF DRAWINGS
J-U-B SHALL RETAIN ALL COMMON LAW, STATUTORY, COPYRIGHT AND OTHER RESERVED RIGHTS OF THESE DRAWINGS, AND THE SAME SHALL NOT BE REUSED WITHOUT J-U-B'S PRIOR WRITTEN CONSENT. ANY REUSE WITHOUT WRITTEN CONSENT BY J-U-B WILL BE AT CLIENTS SOLE RISK AND WITHOUT LIABILITY OR LEGAL EXPOSURE TO J-U-B.

NO.	DESCRIPTION	BY	APP'L	DATE
	REVISION			

SPANISH FORK & MAPLETON WRF
SPANISH FORK CITY CORPORATION

ELECTRICAL
FIXTURE SCHEDULE

FILE : 55-20-124_00E-906
JUB PROJ. # : 55-20-124
DRAWN BY: KES
DESIGN BY: KES
CHECKED BY: SK

ONE INCH
AT FULL SIZE, IF NOT ONE INCH, SCALE ACCORDINGLY

LAST UPDATED: 7/6/2022

DRAWING:
00-E-906

SHEET: 581 OF 691

Plot Date:7/6/2022 6:08 PM Plotted By: Thakare, Ashish
Date Created:6/30/2022 C:\PW_WORKING\WTR\ATHAKARE\D0149714\55-20-124_00E-906.DWG

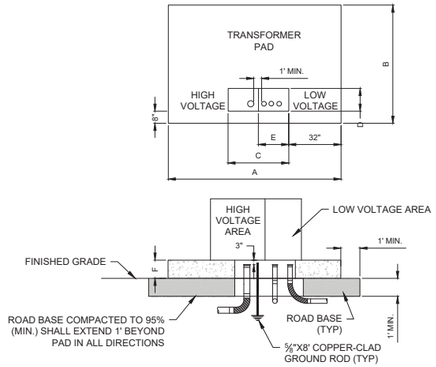

GENERAL TRANSFORMER CLEARANCES

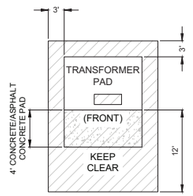

TRANSFORMER PAD DIMENSION CHART						
TRANSFORMER KVA RATING	DIMENSIONS					
	A	B	C	D	E	F
75-500 KVA	114"	78"	36"	15"	18"	9"
750-1500 KVA	118"	105"	52"	16"	20"	11"
2000 KVA	CONTACT POWER DEPT.					

NOTES:

1. SITE PREPARATION & INSPECTIONS. AFTER EXCAVATION, ALL EXCAVATED AREA 1' PAST PAD SHALL BE BACK FILLED WITH ROAD BASE AND MUST BE COMPACTED TO 95%. THE GROUND MUST BE LEVEL AN ADDITIONAL 12' PAST THE EDGE OF THE PAD ON ALL SIDES AND THEN TAPER OFF. ALL PADS SHALL BE INSPECTED PRIOR TO POURING CONCRETE, AND THE GROUND SHALL HAVE A COMPACTION TEST DONE PRIOR TO THE FORM BEING CONSTRUCTED.
2. CONCRETE. CONCRETE SHALL BE IN ACCORDANCE WITH SPANISH FORK CITY STANDARD 4.39.65.040. STEEL REINFORCEMENT SHALL BE #4 BARS PLACED AT 12" CENTERS THROUGHOUT THE PAD. THE PAD MUST BE POURED AT LEAST SEVEN FULL DAYS PRIOR TO SETTING THE TRANSFORMER. THE FINISHED SURFACE MUST BE COMPLETELY FLAT AND LEVEL. CONCRETE SHALL BE TESTED BY THE CITY OR THE CITY'S ENGINEERING FIRM PRIOR TO POURING CONCRETE. CONCRETE SHALL CONFORM TO CITY STANDARDS.
3. FABRICATION. THE PAD SHALL BE CONSTRUCTED ON THE SITE ACCORDING TO THE SPECIFICATIONS.
4. CONDUIT WINDOW LAYOUT. LOW VOLTAGE CONDUITS SHALL BE FORMED AS TIGHTLY AS POSSIBLE AGAINST THE RIGHT SIDE OF THE OPENING AND SHALL IN NO CASE EXTEND FURTHER THAN 20" FROM THE RIGHT SIDE OF THE CONDUIT WINDOW ON THE SMALL PAD OR 30" ON THE LARGE PADS. NO MORE THAN EIGHT CONDUITS WILL BE USED ON THE LOW VOLTAGE SIDE. ON 2000 KVA PADS, NO MORE THAN 12 SECONDARY CONDUITS WILL BE USED. DO NOT PUT ANY CONCRETE IN OR UNDER THE CONDUIT WINDOW. USE SOIL TO SEPARATE CONDUITS. ALL CONDUITS ENTERING THE PAD SHALL BE SCHEDULE 40 P.V.C. WITH RIGID METAL 90° ELBOWS OR FIBERGLASS.
5. GROUNDING. A 5/8" X 8' GROUND ROD SHALL BE USED ON THE SMALL PAD AND A 3/4" X 10' ROD ON THE LARGE PADS. THE GROUND ROD SHALL BE INSTALLED ON THE PRIMARY SIDE OF TRANSFORMER.
6. CLEARANCES. THE FRONT OF THE PAD SHOULD ALWAYS FACE AWAY FROM ADJACENT STRUCTURES AND BE FREE OF OBSTRUCTIONS. AT LEAST THREE FEET MUST SEPARATE THE EDGES OF THE PAD FROM ANY ADJACENT STRUCTURE. THE EDGES OF THE PAD MUST BE AT LEAST TEN FEET FROM ANY COMBUSTIBLE STRUCTURE. IF AN ADJACENT STRUCTURE HAS ANY OVERHANG OR EAVE WITHIN 27 VERTICAL FEET OF THE TOP OF THE PAD, CLEARANCE MUST BE MEASURED FROM THE OUTSIDE OF THE OVERHANG. THE PAD MUST NOT BE PLACED IN AN AREA TEN FEET IN LINE WITH OR THREE FEET TO EITHER SIDE OF ANY WINDOW IN AN ADJACENT STRUCTURE.
7. CLEARANCE FOR A DOOR MUST BE TWENTY FEET IN LINE WITH IT AND TEN FEET ON EITHER SIDE. PADS MUST NOT BE PLACED WITHIN FIFTEEN FEET OF ANY VALVE OR WITHIN TWENTY FEET OF ANY PUMPING OR STORAGE FACILITY CONTAINING FLAMMABLE MATERIAL. NO WALLS, FENCES, OR ANY OTHER OBSTRUCTIONS WILL BE PLACED WITHIN THREE FEET OF THE SIDES OR BACK OF THE PAD, OR WITHIN TWELVE FEET OF THE FRONT OF THE PAD. THE AREA SURROUNDING THE PAD MUST HAVE TWELVE FEET OF CLEAR, LEVEL WORKING AREA FOR MAINTENANCE OF THE TRANSFORMER. THE PAD MAY NOT BE PLACED IN LINE WITH AN AIR INTAKE WITHIN 32 VERTICAL FEET OF THE SURFACE OF THE PAD. ALSO, IT MUST NOT BE PLACED WITHIN 12 FEET VERTICALLY OF A DOOR OR WINDOW.
8. BARRIERS. IF THE TRANSFORMER PAD IS TO BE LOCATED IN AREAS SUBJECT TO VEHICULAR TRAFFIC, (PARKING LOTS, DRIVEWAYS, ETC.) CONTACT SPANISH FORK CITY ELECTRICAL FOR PROTECTIVE BARRIER REQUIREMENTS.
9. METERING. IN GENERAL, THE METERING SHALL BE PLACED ON BUILDINGS OR STRUCTURES.
10. CONNECTIONS. ALL SECONDARY (LOW VOLTAGE) CABLES & SECONDARY CONNECTIONS ARE THE CONTRACTOR'S RESPONSIBILITY. SPANISH FORK ELECTRICAL WILL INSTALL & TERMINATE PRIMARY CABLES & CONNECTIONS ONLY.
11. ANCHORING. CONTRACTOR TO ANCHOR TRANSFORMER TO PAD WITH MINIMUM OF TWO ANCHOR POINTS.

SPANISH FORK CITY 40 SOUTH MAIN STREET SPANISH FORK, UT 84660 (801) 804-4550	**STANDARD DRAWING** 3 PHASE TRANSFORMER & CONCRETE PAD	DRAWN: JLR DESIGN: MHC REVISION: DATE: 4/16/2019	SCALE NONE STANDARD E-612

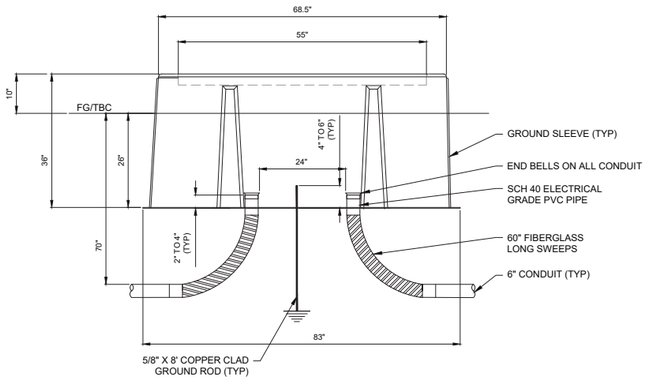

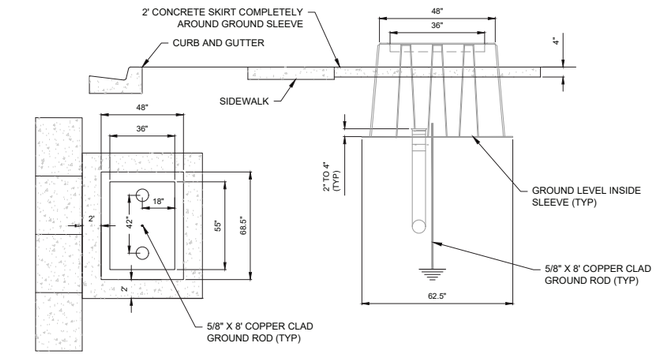

NOTES:

1. SWITCH GEAR GROUND SLEEVE SHALL BE PROVIDED BY SPANISH FORK ELECTRIC AND INSTALLED BY ELECTRICAL CONTRACTOR AS PER CITY SUPPLIED LAYOUT
2. 1250 LB MULE TAPE SHALL BE BLOWN INTO CONDUIT AND TIED SECURELY TO GROUND ROD
3. CONDUIT LAYOUT DETAIL SHALL BE GIVEN BY SPANISH FORK ELECTRIC DURING PRE CONSTRUCTION MEETING
4. TYPICAL FOR COMMERCIAL TRANSFORMER PROTECTION FOR 750KVA AND LARGER

SPANISH FORK CITY 40 SOUTH MAIN STREET SPANISH FORK, UT 84660 (801) 804-4550	**STANDARD DRAWING** 600 AMP PSE 3/S SWITCHGEAR	DRAWN: TC DESIGN: TC REVISION: DATE: 4/16/2019	SCALE NONE STANDARD E-614

GENERAL SHEET NOTES

1. DETAILS ON THIS PAGE WERE THE LATEST AVAILABLE FROM SPANISH FORK POWER AND LIGHT AT THE TIME OF DESIGN. CONTRACTOR SHALL OBTAIN THE LATEST VERSIONS OF THESE DETAILS FROM SPANISH FORM POWER AND LIGHT AND COMPLY WITH THOSE.

J-U-B ENGINEERS, INC.

J-U-B ENGINEERS, INC.
392. E. Winchester St., Suite 300
Salt Lake City, UT 84107
Phone: 801.547.0393
www.jub.com

Subconsultant:

Stantec
2890 E Cottonwood Pkwy
Suite 300, Salt Lake City, Ut
84121
Tel: +1.801.617.3200
www.stantec.com

AGENCY

REVIEW

REUSE OF DRAWINGS
J-U-B SHALL RETAIN ALL COMMON LAW, STATUTORY, COPYRIGHT AND OTHER RESERVED RIGHTS OF THESE DRAWINGS, AND THE SAME SHALL NOT BE REUSED WITHOUT J-U-B'S PRIOR WRITTEN CONSENT. ANY REUSE WITHOUT WRITTEN CONSENT BY J-U-B WILL BE AT CLIENTS SOLE RISK AND WITHOUT LIABILITY OR LEGAL EXPOSURE TO J-U-B.

NO.	DESCRIPTION	BY	APP'L	DATE
	REVISION			

SPANISH FORK & MAPLETON WRF
SPANISH FORK CITY CORPORATION

ELECTRICAL
SPANISH FORK POWER AND LIGHT DETAILS

FILE : 55-20-124_00E-910
JUB PROJ. # : 55-20-124
DRAWN BY: KES
DESIGN BY: KES
CHECKED BY: SK

ONE INCH
AT FULL SIZE. IF NOT ONE INCH, SCALE ACCORDINGLY

LAST UPDATED: 7/6/2022

DRAWING:
00-E-910

SHEET: 582 OF 691

Plot Date:7/6/2022 6:16 PM Plotted By: Thakare, Ashish
Date Created:7/6/2022 C:\PW_WORKING\WITRIATHAKARE\D0149714\55-20-124_00E-910.DWG

SHEET KEYNOTES

1	TRANSFORMER SUPPLIED BY SPANISH FORK POWER AND LIGHT FOR INSTALLATION BY CONTRACTOR. SPANISH FORK POWER AND LIGHT TO MAKE ALL PRIMARY CONNECTIONS TO TRANSFORMERS.
2	SWITCH SUPPLIED AND INSTALLED BY SPANISH FORK POWER AND LIGHT.
3	PROVIDE PREPARED SPACE
4	METERING CABINET SUPPLIED BY SPANISH FORK POWER AND LIGHT
5	CABLES SUPPLIED AND INSTALLED BY SPANISH FORK POWER AND LIGHT
12	SPANISH FORK POWER AND LIGHT TO VERIFY FUSE SIZES.
15	PROVIDE SERVICE ENTRANCE RATED DEVICES

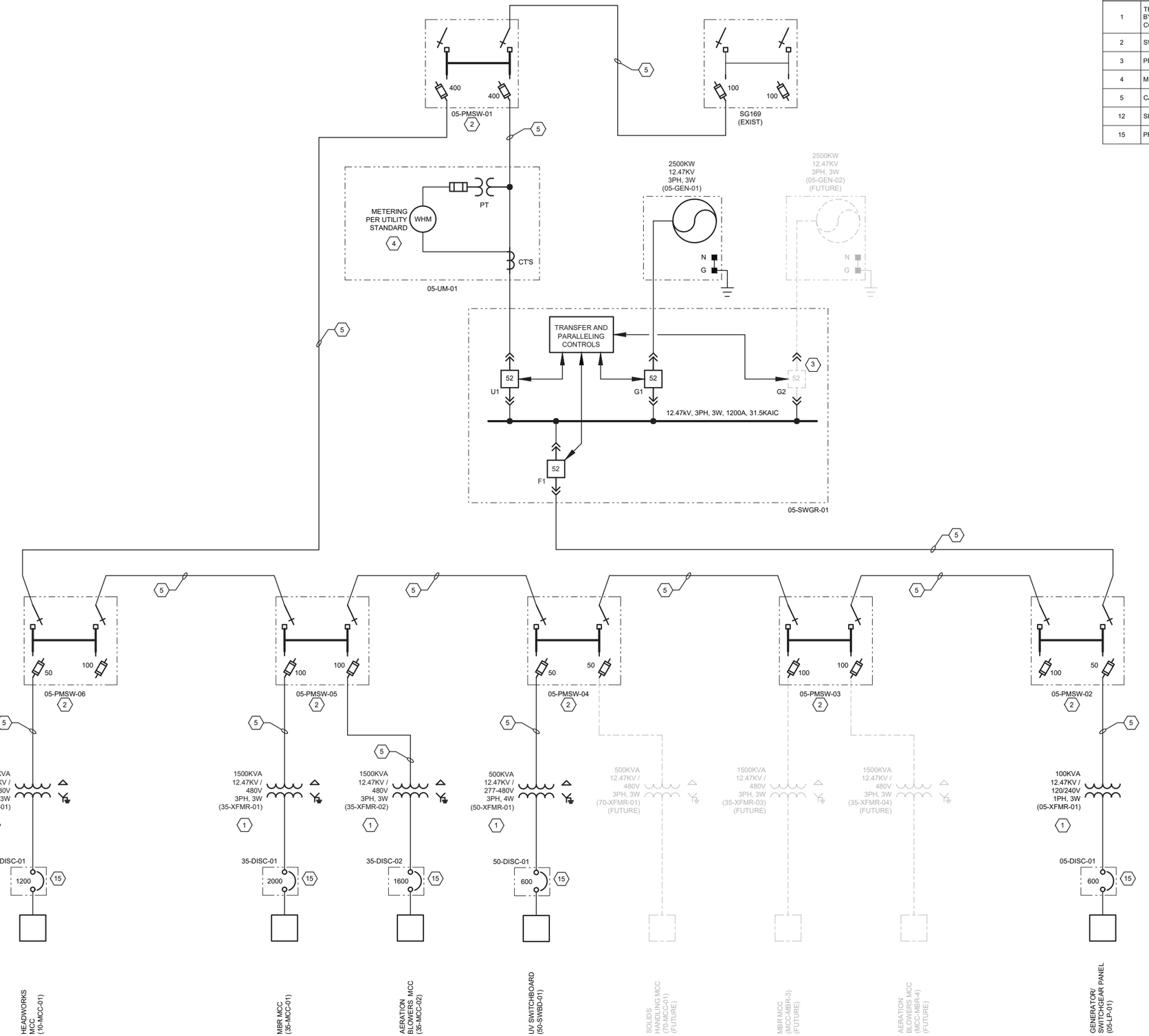

J-U-B ENGINEERS, INC.

J-U-B ENGINEERS, INC.
392. E. Winchester St., Suite 300
Salt Lake City, UT 84107
Phone: 801.547.0393
www.jub.com

Subconsultant:

Stantec
Stantec
2890 E Cottonwood Pkwy
Suite 300, Salt Lake City, Ut
84121
Tel: +1.801.617.3200
www.stantec.com

AGENCY

REVIEW

REUSE OF DRAWINGS
J-U-B SHALL RETAIN ALL COMMON LAW, STATUTORY, COPYRIGHT AND OTHER RESERVED RIGHTS OF THESE DRAWINGS, AND THE SAME SHALL NOT BE REUSED WITHOUT J-U-B'S PRIOR WRITTEN CONSENT. ANY REUSE WITHOUT WRITTEN CONSENT BY J-U-B WILL BE AT CLIENTS SOLE RISK AND WITHOUT LIABILITY OR LEGAL EXPOSURE TO J-U-B.

NO.	DESCRIPTION	BY	APP.	DATE
	REVISION			

SPANISH FORK & MAPLETON WRF
SPANISH FORK CITY CORPORATION

05 - SITE ELECTRICAL
OVERALL SINGLE LINE DIAGRAM

FILE : 55-20-124-05E-001
JUB PROJ. # : 55-20-124
DRAWN BY: KES
DESIGN BY: KES
CHECKED BY: SK
ONE INCH
AT FULL SIZE, IF NOT ONE INCH, SCALE ACCORDINGLY
LAST UPDATED: 2/10/2022

DRAWING:
05-E-001

SHEET: 583 OF 691

Plot Date:7/12022 8:40 AM Plotted By: Smith, Keith
Date Created:2/10/2022 C:\PW_WORKING\WTRKEISMITH\D0202666\55-20-124-05E-001.DWG

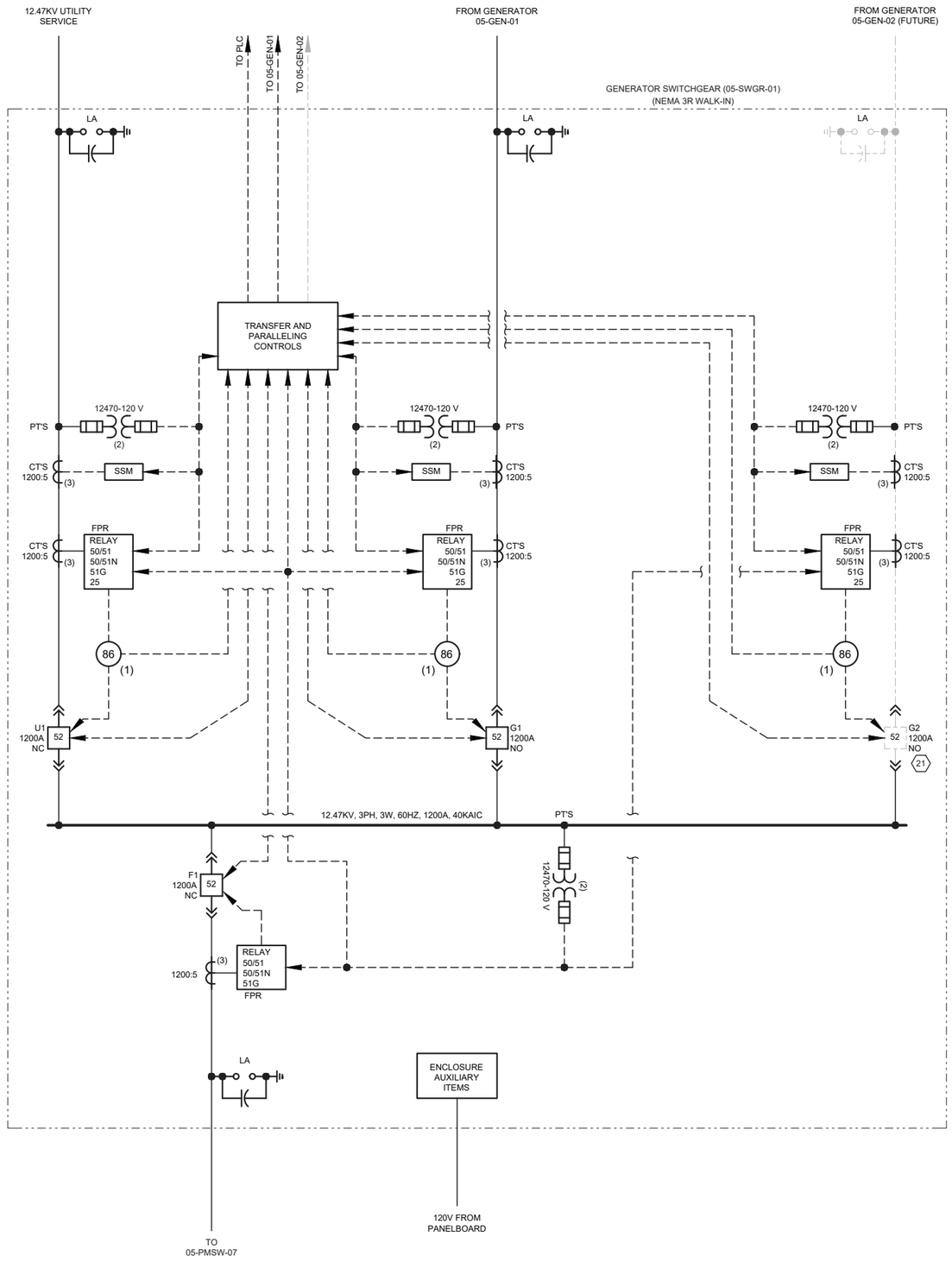

SHEET KEYNOTES

21	PROVIDE SWITCHGEAR WITH PREPARED SPACE FOR FUTURE BREAKER

J-U-B ENGINEERS, INC.

J-U-B ENGINEERS, INC.
392. E. Winchester St., Suite 300
Salt Lake City, UT 84107
Phone: 801.547.0393
www.jub.com

Subconsultant:

Stantec
Stantec
2890 E Cottonwood Pkwy
Suite 300, Salt Lake City, Ut 84121
Tel: +1.801.617.3200
www.stantec.com

AGENCY

REVIEW

REUSE OF DRAWINGS
J-U-B SHALL RETAIN ALL COMMON LAW, STATUTORY, COPYRIGHT AND OTHER RESERVED RIGHTS OF THESE DRAWINGS, AND THE SAME SHALL NOT BE REUSED WITHOUT J-U-B'S PRIOR WRITTEN CONSENT. ANY REUSE WITHOUT WRITTEN CONSENT BY J-U-B WILL BE AT CLIENTS SOLE RISK AND WITHOUT LIABILITY OR LEGAL EXPOSURE TO J-U-B.

NO.	DESCRIPTION	BY	APP'L	DATE
	REVISION			

SPANISH FORK & MAPLETON WRF
SPANISH FORK CITY CORPORATION

05 - SITE ELECTRICAL
GENERATOR SWITCHGEAR SINGLE LINE DIAGRAM

FILE : 55-20-124-05E-002
JUB PROJ. # : 55-20-124
DRAWN BY: KES
DESIGN BY: KES
CHECKED BY: SK

ONE INCH
AT FULL SIZE, IF NOT ONE INCH, SCALE ACCORDINGLY

LAST UPDATED: 6/14/2022

DRAWING:
05-E-002

SHEET: 584 OF 691

Plot Date:7/1/2022 8:41 AM Plotted By: Smith, Keith
Date Created:6/14/2022 C:\PW_WORKING\WTR\KESMITH\D0320560\55-20-124-05E-002.DWG

SHEET KEYNOTES

21	PROVIDE SWITCHGEAR WITH PREPARED SPACE FOR FUTURE BREAKER

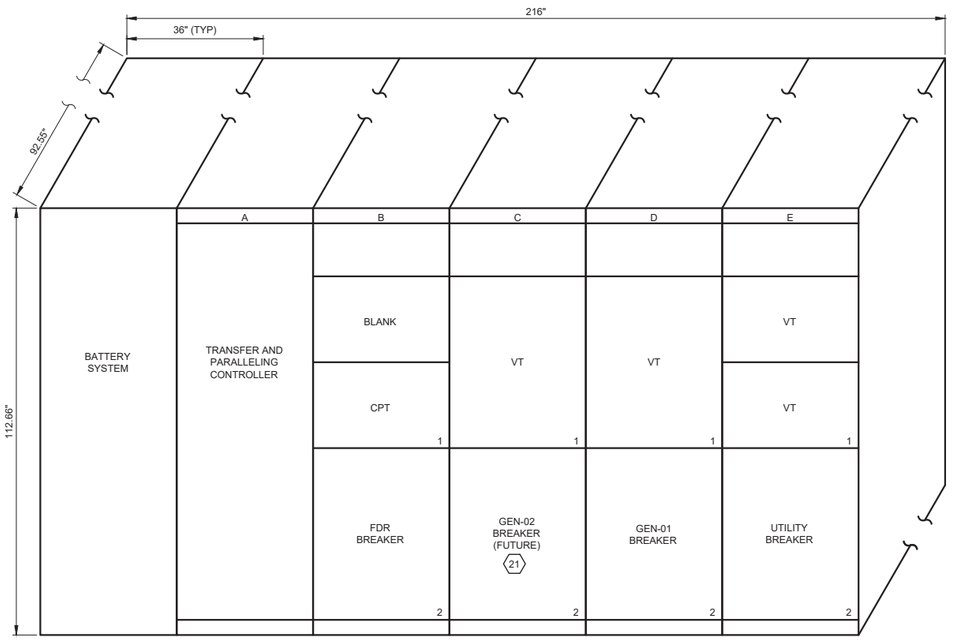

GENERATOR SWITCHGEAR
(05-SWGR-01)

ENCLOSURE TO BE NEMA 3R-WALK IN
WALK-IN AISLE AND DIMENSIONS NOT SHOWN FOR CLARITY

J-U-B ENGINEERS, INC.

J-U-B ENGINEERS, INC.
392. E. Winchester St., Suite 300
Salt Lake City, UT 84107
Phone: 801.547.0393
www.jub.com

Subconsultant:

Stantec
Stantec
2890 E Cottonwood Pkwy
Suite 300, Salt Lake City, Ut
84121
Tel: +1.801.617.3200
www.stantec.com

AGENCY

REVIEW

REUSE OF DRAWINGS
J-U-B SHALL RETAIN ALL COMMON LAW, STATUTORY, COPYRIGHT AND OTHER RESERVED RIGHTS OF THESE DRAWINGS, AND THE SAME SHALL NOT BE REUSED WITHOUT J-U-B'S PRIOR WRITTEN CONSENT. ANY REUSE WITHOUT WRITTEN CONSENT BY J-U-B WILL BE AT CLIENTS SOLE RISK AND WITHOUT LIABILITY OR LEGAL EXPOSURE TO J-U-B.

NO.	DESCRIPTION	BY	APR.	DATE
REVISION				

SPANISH FORK & MAPLETON WRF
SPANISH FORK CITY CORPORATION

05 - SITE ELECTRICAL
GENERATOR SWITCHGEAR ELEVATION

FILE : 55-20-124-05E-003
JUB PROJ. # : 55-20-124
DRAWN BY: KES
DESIGN BY: KES
CHECKED BY: SK

ONE INCH
AT FULL SIZE, IF NOT ONE INCH, SCALE ACCORDINGLY

LAST UPDATED: 6/14/2022

DRAWING:
05-E-003

SHEET: 585 OF 691

Plot Date:7/1/2022 8:41 AM Plotted By: Smith, Keith
Date Created:6/14/2022 C:\PW_WORKING\WTR\KEISMITH\D0202660\55-20-124-05E-003.DWG

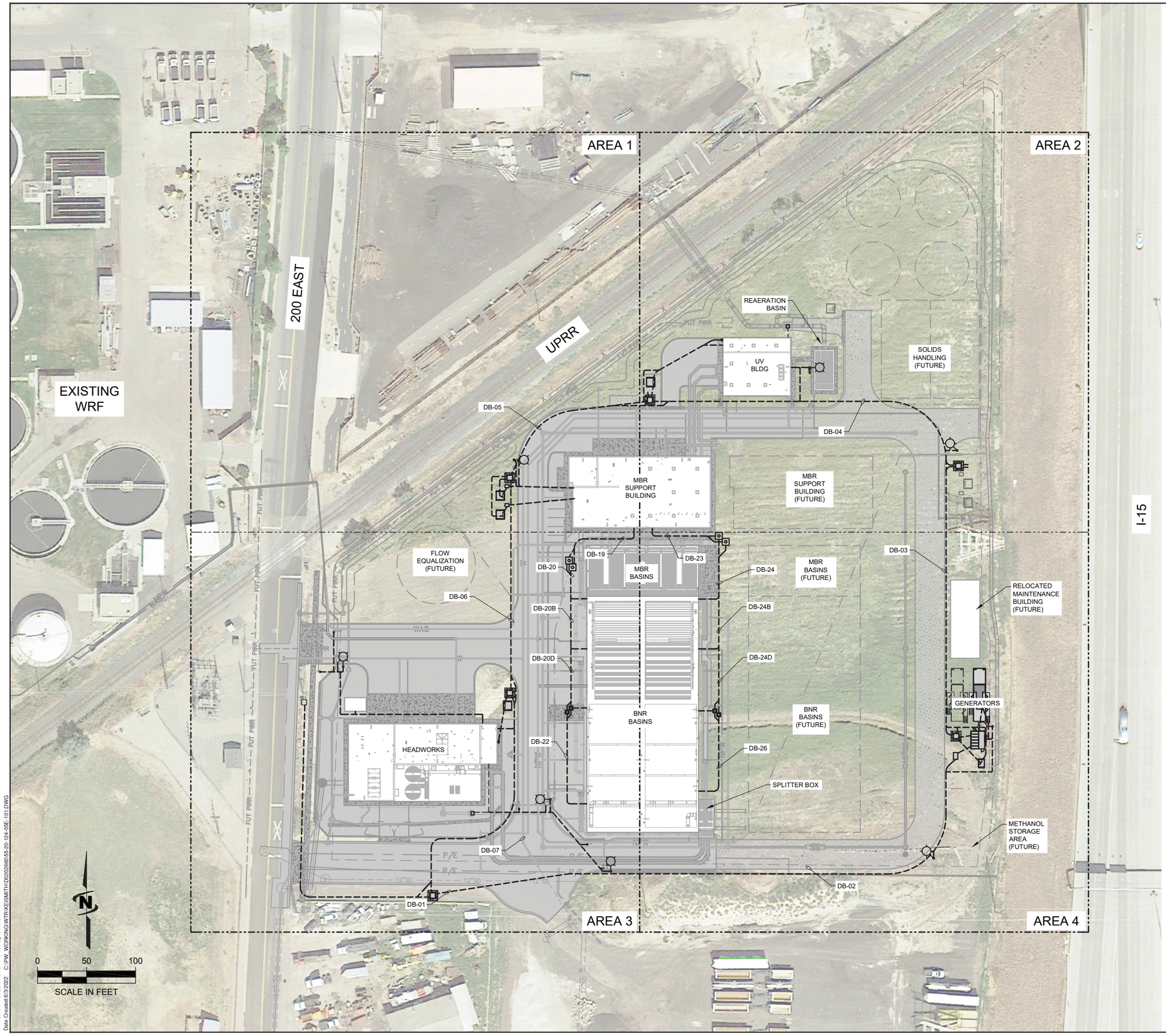

Plot Date:7/1/2022 8:42 AM Plotted By: Smith, Keith
Date Created:6/3/2022 C:\PW_WORKING\WTR\KESMITH.ID0320560\55-20-124-05E-101.DWG

J-U-B ENGINEERS, INC.

J-U-B ENGINEERS, INC.
392. E. Winchester St., Suite 300
Salt Lake City, UT 84107
Phone: 801.547.0393
www.jub.com

Subconsultant:

Stantec
Stantec
2890 E Cottonwood Pkwy
Suite 300, Salt Lake City, Ut 84121
Tel: +1.801.617.3200
www.stantec.com

AGENCY

REVIEW

REUSE OF DRAWINGS
J-U-B SHALL RETAIN ALL COMMON LAW, STATUTORY, COPYRIGHT AND OTHER RESERVED RIGHTS OF THESE DRAWINGS, AND THE SAME SHALL NOT BE REUSED WITHOUT J-U-B'S PRIOR WRITTEN CONSENT. ANY REUSE WITHOUT WRITTEN CONSENT BY J-U-B WILL BE AT CLIENTS SOLE RISK AND WITHOUT LIABILITY OR LEGAL EXPOSURE TO J-U-B.

NO.	DESCRIPTION	BY	APP'D	DATE
	REVISION			

SPANISH FORK & MAPLETON WRF
SPANISH FORK CITY CORPORATION

05 - SITE ELECTRICAL
OVERALL SITE PLAN

FILE : 55-20-124-05E-101
JUB PROJ. # : 55-20-124
DRAWN BY: KES
DESIGN BY: KES
CHECKED BY: SK

ONE INCH
AT FULL SIZE. IF NOT ONE INCH, SCALE ACCORDINGLY

LAST UPDATED: 6/3/2022

DRAWING:
05-E-101

SHEET: 586 OF 691



SHEET KEYNOTES

6	SWITCH PROVIDED AND INSTALLED BY SPANISH FORK POWER AND LIGHT
7	TRANSFORMER PROVIDED BY SPANISH FORK POWER AND LIGHT AND INSTALLED BY CONTRACTOR
8	ALL MEDIUM VOLTAGE CABLES PROVIDED AND INSTALLED BY SPANISH FORK POWER AND LIGHT
10	SWITCH PAD TO BE PER SPANISH FORK POWER AND LIGHT DETAIL E-614
11	TRANSFORMER PAD TO BE PER SPANISH FORK POWER AND LIGHT DETAIL E-612
22	COORDINATE WITH CIVIL AND/OR CITY POWER AND LIGHT FOR DUCT BANK DEPTHS WHERE CROSSING BURIED PIPES.
23	DUCTBANK INSTALLATION SHALL COMPLY WIHT SPANISH FORK POWER AND LIGHT DETAIL E-604 AS APPROPRIATE. DUCTBANK SHALL INCLUDE A #4/0 BARE COPPER GROUND WIRE WHICH SHALL CONNECT TO THE GROUND ROD AT EACH PAD MOUNTED SWITCH.
24	PROVIDE A #4/0 BARE COPPER GROUND WIRE AND CONNECT TO GROUND ROD AT SWITCH ON ONE END AND TO GROUND ROD AT TRANSFORMER AT OTHER END.

J-U-B ENGINEERS, INC.

J-U-B ENGINEERS, INC.
392. E. Winchester St., Suite 300
Salt Lake City, UT 84107
Phone: 801.547.0393
www.jub.com

Subconsultant:

Stantec
Stantec
2890 E Cottonwood Pkwy
Suite 300, Salt Lake City, Ut 84121
Tel: +1.801.617.3200
www.stantec.com

AGENCY REVIEW

REUSE OF DRAWINGS
J-U-B SHALL RETAIN ALL COMMON LAW, STATUTORY, COPYRIGHT AND OTHER RESERVED RIGHTS OF THESE DRAWINGS, AND THE SAME SHALL NOT BE REUSED WITHOUT J-U-B'S PRIOR WRITTEN CONSENT. ANY REUSE WITHOUT WRITTEN CONSENT BY J-U-B WILL BE AT CLIENTS SOLE RISK AND WITHOUT LIABILITY OR LEGAL EXPOSURE TO J-U-B.

NO.	DESCRIPTION	BY	APP'L	DATE
	REVISION			

SPANISH FORK & MAPLETON WRF
SPANISH FORK CITY CORPORATION

05 - SITE ELECTRICAL
AREA 1 SITE PLAN

FILE : 55-20-124-05E-102
JUB PROJ. # : 55-20-124
DRAWN BY: KES
DESIGN BY: KES
CHECKED BY: SK
ONE INCH
AT FULL SIZE, IF NOT ONE INCH, SCALE ACCORDINGLY
LAST UPDATED: 6/30/2022

DRAWING:
05-E-102

SHEET: 587 OF 691

Plot Date:7/1/2022 9:24 AM Plotted By: Smith, Keith
Date Created:6/30/2022 C:\PW_WORKING\WTR\KEISMITH\D0202660\05-20-124-05E-102.DWG

MATCHLINE SHEET 05-E-102



MATCHLINE SHEET 05-E-105

SHEET KEYNOTES

6	SWITCH PROVIDED AND INSTALLED BY SPANISH FORK POWER AND LIGHT
7	TRANSFORMER PROVIDED BY SPANISH FORK POWER AND LIGHT AND INSTALLED BY CONTRACTOR
8	ALL MEDIUM VOLTAGE CABLES PROVIDED AND INSTALLED BY SPANISH FORK POWER AND LIGHT
10	SWITCH PAD TO BE PER SPANISH FORK POWER AND LIGHT DETAIL E-614
11	TRANSFORMER PAD TO BE PER SPANISH FORK POWER AND LIGHT DETAIL E-612
18	STUB AND CAP CONDUIT 5' FROM SWITCH.
22	COORDINATE WITH CIVIL AND/OR CITY POWER AND LIGHT FOR DUCT BANK DEPTHS WHERE CROSSING BURIED PIPES.
23	DUCTBANK INSTALLATION SHALL COMPLY WIHT SPANISH FORK POWER AND LIGHT DETAIL E-604 AS APPROPRIATE. DUCTBANK SHALL INCLUDE A #4/0 BARE COPPER GROUND WIRE WHICH SHALL CONNECT TO THE GROUND ROD AT EACH PAD MOUNTED SWITCH.
24	PROVIDE A #4/0 BARE COPPER GROUND WIRE AND CONNECT TO GROUND ROD AT SWITCH ON ONE END AND TO GROUND ROD AT TRANSFORMER AT OTHER END.

J-U-B ENGINEERS, INC.

J-U-B ENGINEERS, INC.
392. E. Winchester St., Suite 300
Salt Lake City, UT 84107
Phone: 801.547.0393
www.jub.com

Subconsultant:

Stantec
Stantec
2890 E Cottonwood Pkwy
Suite 300, Salt Lake City, Ut
84121
Tel: +1.801.617.3200
www.stantec.com

AGENCY

REVIEW

REUSE OF DRAWINGS
J-U-B SHALL RETAIN ALL COMMON LAW, STATUTORY, COPYRIGHT AND OTHER RESERVED RIGHTS OF THESE DRAWINGS, AND THE SAME SHALL NOT BE REUSED WITHOUT J-U-B'S PRIOR WRITTEN CONSENT. ANY REUSE WITHOUT WRITTEN CONSENT BY J-U-B WILL BE AT CLIENTS SOLE RISK AND WITHOUT LIABILITY OR LEGAL EXPOSURE TO J-U-B.

NO.	DESCRIPTION	BY	APP'D	DATE
	REVISION			

SPANISH FORK & MAPLETON WRF
SPANISH FORK CITY CORPORATION

05 - SITE ELECTRICAL
AREA 2 SITE PLAN

FILE : 55-20-124-05E-103
JUB PROJ. # : 55-20-124
DRAWN BY: KES
DESIGN BY: KES
CHECKED BY: SK

ONE INCH
AT FULL SIZE, IF NOT ONE INCH, SCALE ACCORDINGLY

LAST UPDATED: 6/14/2022

DRAWING:
05-E-103

SHEET: 588 OF 691

Plot Date:7/1/2022 9:26 AM Plotted By: Smith, Keith
Date Created:6/14/2022 C:\PW_WORKING\WTR\KESMITH\D032260\05-20-124-05E-103.DWG

MATCHLINE SHEET 05-E-102

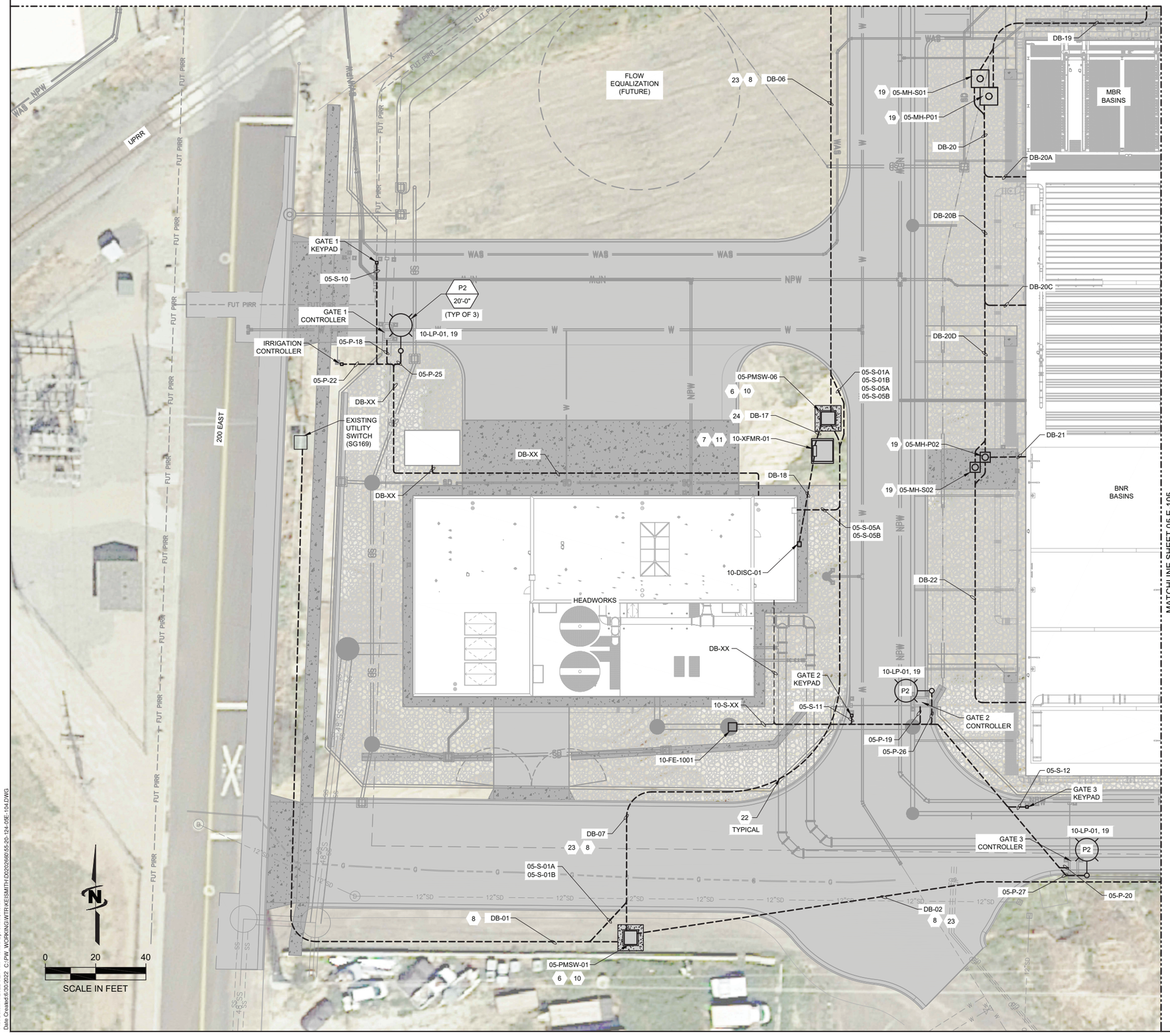

SHEET KEYNOTES

6	SWITCH PROVIDED AND INSTALLED BY SPANISH FORK POWER AND LIGHT
7	TRANSFORMER PROVIDED BY SPANISH FORK POWER AND LIGHT AND INSTALLED BY CONTRACTOR
8	ALL MEDIUM VOLTAGE CABLES PROVIDED AND INSTALLED BY SPANISH FORK POWER AND LIGHT
10	SWITCH PAD TO BE PER SPANISH FORK POWER AND LIGHT DETAIL E-614
11	TRANSFORMER PAD TO BE PER SPANISH FORK POWER AND LIGHT DETAIL E-612
18	STUB AND CAP CONDUIT 5' FROM SWITCH.
19	ENSURE MANHOLE LIDS ARE AT ELAST 10' FROM BASIN WALLS TO KEEP THEM OUT OF CALSSIFIED AREAS.
22	COORDINATE WITH CIVIL AND/OR CITY POWER AND LIGHT FOR DUCT BANK DEPTHS WHERE CROSSING BURIED PIPES.
23	DUCTBANK INSTALLATION SHALL COMPLY WIHT SPANISH FORK POWER AND LIGHT DETAIL E-604 AS APPROPRIATE. DUCTBANK SHALL INCLUDE A #4/0 BARE COPPER GROUND WIRE WHICH SHALL CONNECT TO THE GROUND ROD AT EACH PAD MOUNTED SWITCH.
24	PROVIDE A #4/0 BARE COPPER GROUND WIRE AND CONNECT TO GROUND ROD AT SWITCH ON ONE END AND TO GROUND ROD AT TRANSFORMER AT OTHER END.

J-U-B ENGINEERS, INC.

J-U-B ENGINEERS, INC.
392. E. Winchester St., Suite 300
Salt Lake City, UT 84107
Phone: 801.547.0393
www.jub.com

Subconsultant:

Stantec
2890 E Cottonwood Pkwy
Suite 300, Salt Lake City, Ut 84121
Tel: +1.801.617.3200
www.stantec.com

AGENCY

REVIEW

REUSE OF DRAWINGS
J-U-B SHALL RETAIN ALL COMMON LAW, STATUTORY, COPYRIGHT AND OTHER RESERVED RIGHTS OF THESE DRAWINGS, AND THE SAME SHALL NOT BE REUSED WITHOUT J-U-B'S PRIOR WRITTEN CONSENT. ANY REUSE WITHOUT WRITTEN CONSENT BY J-U-B WILL BE AT CLIENTS SOLE RISK AND WITHOUT LIABILITY OR LEGAL EXPOSURE TO J-U-B.

NO.	DESCRIPTION	BY	APP'D	DATE
	REVISION			

SPANISH FORK & MAPLETON WRF
SPANISH FORK CITY CORPORATION

05 - SITE ELECTRICAL
AREA 3 SITE PLAN

FILE : 55-20-124-05E-104
JUB PROJ. # : 55-20-124
DRAWN BY: KES
DESIGN BY: KES
CHECKED BY: SK
ONE INCH
AT FULL SIZE, IF NOT ONE INCH, SCALE ACCORDINGLY
LAST UPDATED: 6/30/2022

DRAWING:
05-E-104

SHEET: 589 OF 691

Plot Date:7/1/2022 9:27 AM Plotted By: Smith, Keith
Date Created:6/30/2022 C:\FW_WORKING\WTR\KESMITH\D2020\60\55-20-124-05E-104.DWG

MATCHLINE SHEET 05-E-103

MATCHLINE SHEET 05-E-104



SHEET KEYNOTES

6	SWITCH PROVIDED AND INSTALLED BY SPANISH FORK POWER AND LIGHT
7	TRANSFORMER PROVIDED BY SPANISH FORK POWER AND LIGHT AND INSTALLED BY CONTRACTOR
8	ALL MEDIUM VOLTAGE CABLES PROVIDED AND INSTALLED BY SPANISH FORK POWER AND LIGHT
9	EXTEND CONDUITS FOR FUTURE GENERATOR AT LEAST 10' FROM SWITCHGEAR. STUB AND CAP ENDS.
10	SWITCH PAD TO BE PER SPANISH FORK POWER AND LIGHT DETAIL E-614
11	TRANSFORMER PAD TO BE PER SPANISH FORK POWER AND LIGHT DETAIL E-612
13	UTILITY METERING EQUIPMENT SUPPLIED AND INSTALLED BY SPANISH FORK POWER AND LIGHT.
14	UTILITY METERING CABINET PAD SUPPLIED BY SPANISH FORK POWER AND LIGHT AND INSTALLED BY CONTRACTOR
17	ALL CONDUITS GOING TO/FROM THE GENERATOR SHALL BE RGS OR PVC COATED RGS WHERE UNDER THE GENERATOR PAD AND EXTENDING 10' BEYOND THE GENERATOR PAD.
18	STUB AND CAP CONDUIT 5' FROM SWITCH.
19	ENSURE MANHOLE LIDS ARE AT ELAST 10' FROM BASIN WALLS TO KEEP THEM OUT OF CALSSIFIED AREAS.
23	DUCTBANK INSTALLATION SHALL COMPLY WIHT SPANISH FORK POWER AND LIGHT DETAIL E-604 AS APPROPRIATE. DUCTBANK SHALL INCLUDE A #4/0 BARE COPPER GROUND WIRE WHICH SHALL CONNECT TO THE GROUND ROD AT EACH PAD MOUNTED SWITCH.
24	PROVIDE A #4/0 BARE COPPER GROUND WIRE AND CONNECT TO GROUND ROD AT SWITCH ON ONE END AND TO GROUND ROD AT TRANSFORMER AT OTHER END.

J-U-B ENGINEERS, INC.

J-U-B ENGINEERS, INC.
392. E. Winchester St., Suite 300
Salt Lake City, UT 84107
Phone: 801.547.0393
www.jub.com

Subconsultant:

Stantec
Stantec
2890 E Cottonwood Pkwy
Suite 300, Salt Lake City, Ut 84121
Tel: +1.801.617.3200
www.stantec.com

AGENCY

REVIEW

REUSE OF DRAWINGS
J-U-B SHALL RETAIN ALL COMMON LAW, STATUTORY, COPYRIGHT AND OTHER RESERVED RIGHTS OF THESE DRAWINGS, AND THE SAME SHALL NOT BE REUSED WITHOUT J-U-B'S PRIOR WRITTEN CONSENT. ANY REUSE WITHOUT WRITTEN CONSENT BY J-U-B WILL BE AT CLIENTS SOLE RISK AND WITHOUT LIABILITY OR LEGAL EXPOSURE TO J-U-B.

NO.	DESCRIPTION	BY	APP'L	DATE
	REVISION			

SPANISH FORK & MAPLETON WRF
SPANISH FORK CITY CORPORATION

05 - SITE ELECTRICAL
AREA 4 SITE PLAN

FILE : 55-20-124-05E-105
JUB PROJ. # : 55-20-124
DRAWN BY: KES
DESIGN BY: KES
CHECKED BY: SK

ONE INCH
AT FULL SIZE, IF NOT ONE INCH, SCALE ACCORDINGLY

LAST UPDATED: 6/30/2022

DRAWING:
05-E-105

SHEET: 590 OF 691

Plot Date:7/12/2022 9:29 AM Plotted By: Smith, Keith
Date Created:6/30/2022 C:\PW_WORKING\WTR\KESMITH\D0202656\55-20-124-05E-105.DWG

J-U-B ENGINEERS, INC.

J-U-B ENGINEERS, INC.
392. E. Winchester St., Suite 300
Salt Lake City, UT 84107
Phone: 801.547.0393
www.jub.com

Subconsultant:

Stantec

Stantec
2890 E Cottonwood Pkwy
Suite 300, Salt Lake City, Ut 84121
Tel: +1.801.617.3200
www.stantec.com

AGENCY

REVIEW

REUSE OF DRAWINGS
J-U-B SHALL RETAIN ALL COMMON LAW, STATUTORY, COPYRIGHT AND OTHER RESERVED RIGHTS OF THESE DRAWINGS, AND THE SAME SHALL NOT BE REUSED WITHOUT J-U-B'S PRIOR WRITTEN CONSENT. ANY REUSE WITHOUT WRITTEN CONSENT BY J-U-B WILL BE AT CLIENTS SOLE RISK AND WITHOUT LIABILITY OR LEGAL EXPOSURE TO J-U-B.

NO.	DESCRIPTION	BY	APR.	DATE
	REVISION			

SPANISH FORK & MAPLETON WRF
SPANISH FORK CITY CORPORATION

05 - SITE ELECTRICAL
SITE CONDUIT DEVELOPMENT - i

FILE : 55-20-124-05E-601
JUB PROJ. # : 55-20-124
DRAWN BY: KES
DESIGN BY: KES
CHECKED BY: SK

ONE INCH
AT FULL SIZE, IF NOT ONE INCH, SCALE ACCORDINGLY

LAST UPDATED: 2/10/2022

DRAWING:
05-E-601

SHEET: 591 OF 691

Plot Date:7/1/2022 9:02 AM Plotted By: Smith, Keith
Date Created:2/10/2022 C:\PW_WORKING\WTR\KEISMITH.D0202686\05-20-124-05E-601.DWG

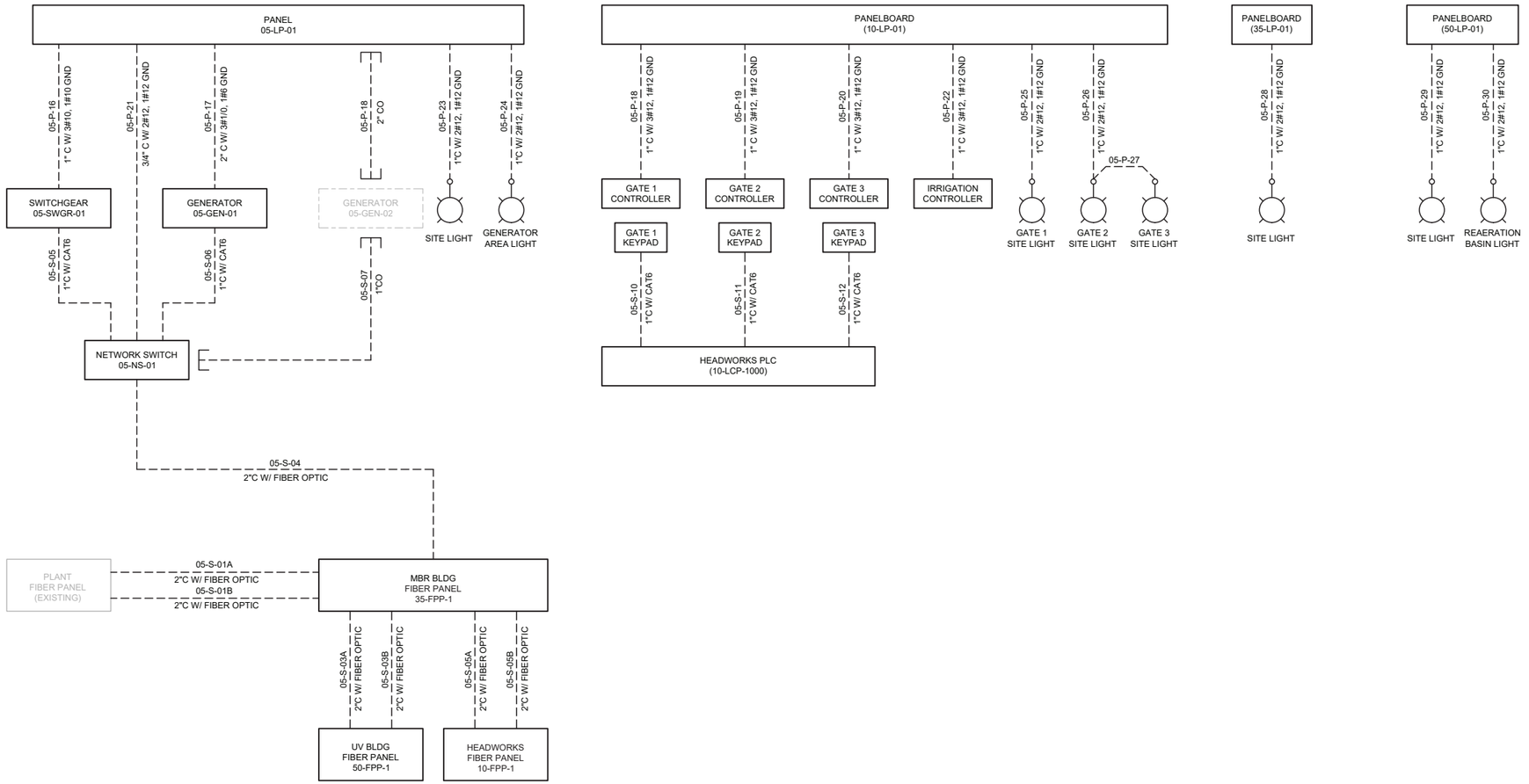

J-U-B ENGINEERS, INC.

J-U-B ENGINEERS, INC.
392. E. Winchester St., Suite 300
Salt Lake City, UT 84107
Phone: 801.547.0393
www.jub.com

Subconsultant:

Stantec
Stantec
2890 E Cottonwood Pkwy
Suite 300, Salt Lake City, Ut
84121
Tel: +1.801.617.3200
www.stantec.com

AGENCY

REVIEW

REUSE OF DRAWINGS
J-U-B SHALL RETAIN ALL COMMON LAW, STATUTORY, COPYRIGHT AND OTHER RESERVED RIGHTS OF THESE DRAWINGS, AND THE SAME SHALL NOT BE REUSED WITHOUT J-U-B'S PRIOR WRITTEN CONSENT. ANY REUSE WITHOUT WRITTEN CONSENT BY J-U-B WILL BE AT CLIENTS SOLE RISK AND WITHOUT LIABILITY OR LEGAL EXPOSURE TO J-U-B.

NO.	DESCRIPTION	BY	APP'I	DATE
	REVISION			

SPANISH FORK & MAPLETON WRF
SPANISH FORK CITY CORPORATION

05 - SITE ELECTRICAL
SITE CONDUIT DEVELOPMENT - II

FILE : 55-20-124-05E-602
JUB PROJ. # : 55-20-124
DRAWN BY: KES
DESIGN BY: KES
CHECKED BY: SK

ONE INCH
AT FULL SIZE, IF NOT ONE INCH, SCALE ACCORDINGLY

LAST UPDATED: 5/20/2022

DRAWING:
05-E-602

SHEET: 592 OF 691

Plot Date:7/1/2022 9:53 AM Plotted By: Smith, Keith
Date Created:5/20/2022 C:\PW_WORKING\WTR\KEISMITH\D032660\05-20-124-05E-602.DWG

DUCTBANK SCHEDULE

TAG	FROM	TO	CONDUIT/CABLES
DB-01	SG-169	05-PMSW-01	05-P-01A, 05-P-01B
DB-02	05-PMSW-01	05-UM-01	05-P-02A, 05-P-02B
DB-03	05-PMSW-02	05-PMSW-03	05-P-06A, 05-P-06B
	05-NS-01	DB-4	05-S-04
DB-04	05-PMSW-03	05-PMSW-04	05-P-07A, 05-P-07B
	DB-3	DB-5	05-S-04
DB-05	05-PMSW-04	05-PMSW-05	05-P-09A, 05-P-09B
	DB-13	DB-15	05-S-03A, 05-S-03B
	DB-4	DB-15	05-S-04
DB-06	05-PMSW-05	05-PMSW-06	05-P-11A, 05-P-11B
	DB-15	DB-07	05-S-01A, 05-S-01B, 05-S-05A, 05-S-05B
DB-07	05-PMSW-06	05-PMSW-01	05-P-13A, 05-P-13B
	DB-06	DB-01	05-S-01A, 05-S-01B
		HW BLDG	05-S-05A, 05-S-05B
DB-08	05-UM-01	05-SWGR-01	05-P-03A, 05-P-03B
DB-09	05-SWGR-01	05-PMSW-02	05-P-04A, 05-P-04B
DB-10	05-PMSW-03	05-XFMR-01	05-P-05
DB-11	05-SWGR-01	05-GEN-01	05-P-14, 05-S-08
DB-12	05-PMSW-04	50-XFMR-01	05-P-08
DB-13	50-XFMR-01	50-DISC-01	50-P-01A, 50-P-01B, 50-P-01C, 50-P-01D
	DB-05	UV BLDG	05-S-03A, 05-S-03B
DB-14	05-PMSW-05	35-XFMR-01	05-P-10A
		35-XFMR-02	05-P-10BB
DB-15	35-DISC-01	35-MCC-01	35-P-02A, 35-P-02B, 35-P-02C, 35-P-02D, 35-P-02E, 35-P-02F
	MBR SUPPORT BLDG	DB-05	05-S-03A, 05-S-03B, 05-S-04
		DB-06	05-S-01A, 05-S-01B, 05-S-05A, 05-S-05B
DB-16	35-DISC-02	35-MCC-02	35-P-04A, 35-P-04B, 35-P-04C, 35-P-04D, 35-P-04E
DB-17	05-PMSW-06	10-XFMR-01	05-P-12
DB-18	10-XFMR-01	10-DISC-01	10-P-01A, 10-P-01B, 10-P-01C, 10-P-01D
DB-19	MBR SUPT BLDG	05-MH-P01	20-P-01A, 20-P-02A, 20-P-03A, 20-P-04A, 20-P-05A, 20-P-22A, 20-P-23A, 20-P-26A, 20-C-01A, 20-C-02A, 20-C-03A, 20-C-04A, 20-C-05A, 20-C-28A
		05-MH-S01	20-S-01A, 20-S-02A, 20-S-15A
DB-20	05-MH-P01	DB-20A, DB-20B	20-P-01B, 20-P-02B, 20-P-03B, 20-P-04B, 20-P-05B, 20-P-05C, 20-P-05D, 20-P-22B, 20-P-23B, 20-P-26B, 20-C-01B, 20-C-02B, 20-C-03B, 20-C-04B, 20-C-05B, 20-C-05C, 20-C-05D, 20-C-28B
	05-MH-S01		20-S-01B, 20-S-02B, 20-S-02C, 20-S-02D, 20-S-02E
DB-20A	DB-20	BNR/MBR BASINS	
			20-S-15B
DB-20B	DB-20	DB-20C, DB-20D	20-P-01B, 20-P-02B, 20-P-03B, 20-P-04B, 20-P-05B, 20-P-05C, 20-P-05D, 20-P-22B, 20-P-23B, 20-P-26B, 20-C-01B, 20-C-02B, 20-C-03B, 20-C-04B, 20-C-05B, 20-C-05C, 20-C-05D, 20-C-28B
			20-S-01B, 20-S-02B, 20-S-02C, 20-S-02D, 20-S-02E, 20-S-15B
DB-20C	DB-20B	BNR BASINS	20-P-22B, 20-P-23B, 20-P-26B, 20-C-05B, 20-C-05C, 20-C-05D, 20-C-28B
			20-S-01B, 20-S-02B, 20-S-02C, 20-S-02D, 20-S-02E, 20-S-15B
DB-20D	DB-20B	05-MH-P02	20-P-01B, 20-P-02B, 20-P-03B, 20-P-04B, 20-C-01B, 20-C-02B, 20-C-03B, 20-C-04B
		05-MH-S02	20-S-01B
DB-21	05-MH-P02	BNR BASINS	20-P-02C, 20-P-03C, 20-P-03D, 20-P-04C, 20-P-04E, 20-C-01D, 20-C-02C, 20-C-02D, 20-C-03C, 20-C-03E20-C-04C, 20-S-01E
	05-MH-S02		20-S-01E
DB-22	05-MH-P02	BNR BASINS	20-P-01C, 20-P-01D, 20-P-01E, 20-P-02C, 20-P-04D, 20-C-01C, 20-C-04D
	05-MH-S02		20-S-01C, 20-S-01D

DUCTBANK SCHEDULE

TAG	FROM	TO	CONDUIT/CABLES
DB-23	MBR SUPT BLDG	05-MH-P03	20-P-06A, 20-P-07A, 20-P-08A, 20-P-09A, 20-P-10A, 20-P-24A, 20-P-25A, 20-P-27A, 20-C-06A, 20-C-07A, 20-C-08A, 20-C-09A, 20-C-10A, 20-C-29A
		05-MH-S03	20-S-03A, 20-S-04A, 20-S-16A
DB-24 ⟨20⟩	05-MH-P03	DB-24A, DB-24B	20-P-06B, 20-P-07B, 20-P-08B, 20-P-09B, 20-P-10B, 20-P-10C, 20-P-10D, 20-P-24B, 20-P-25B, 20-P-27B, 20-C-06B, 20-C-07B, 20-C-08B, 20-C-09B, 20-C-10B, 20-C-10C, 20-C-10D, 20-C-29B
	05-MH-S03		20-S-03B, 20-S-04B, 20-S-04C, 20-S-04D, 20-S-04E, 20-S-16B
DB-24A	DB-24	BNR/MBR BASINS	
DB-24B ⟨20⟩	DB-24	DB-24C, DB-24D	20-P-06B, 20-P-07B, 20-P-08B, 20-P-09B, 20-P-10B, 20-P-10C, 20-P-10D, 20-P-21B, 20-P-24B, 20-P-25B, 20-P-27B, 20-C-06B, 20-C-07B, 20-C-08B, 20-C-09B, 20-C-10B, 20-C-10C, 20-C-10D, 20-C-29B
			20-S-03B, 20-S-04B, 20-S-04C, 20-S-04D, 20-S-04E, 20-S-16B
DB-24C	DB-24B	BNR BASINS	20-P-10B, 20-P-10C, 20-P-10D, 20-P-27B, 20-C-10B, 20-C-10C, 20-C-10D
			20-S-04B, 20-S-04C, 20-S-04D, 20-S-04E
DB-24D ⟨20⟩	DB-24B	05-MH-P04	20-P-06B, 20-P-07B, 20-P-08B, 20-P-09B, 20-P-21B, 20-P-24B, 20-P-25B, 20-C-06B, 20-C-07B, 20-C-08B, 20-C-09B, 20-C-27B, 20-C-29B
		05-MH-S04	20-S-03B, 20-S-14B, 20-S-16B
DB-25	05-MH-P04	BNR BASINS	20-P-07D, 20-P-08C, 20-P-08D, 20-P-09C, 20-P-09E, 20-C-06D, 20-C-07C, 20-C-07D, 20-C-08C, 20-C-08E, 20-C-09D
	05-MH-S04		20-S-03E
DB-26 ⟨20⟩	05-MH-P04	BNR BASINS	20-P-06C, 20-P-06D, 20-P-06E, 20-P-07C, 20-P-09D, 20-C-06C, 20-C-08D, 20-C-09C
	05-MH-S04		20-S-03C, 20-S-03D

PULLBOX/MANHOLE SCHEDULE

TAG	INSIDE DIMENSIONS LxWxH	COVER
05-MH-P01	6'x6'x7'	"POWER"
05-MH-P02	3'x3'x3'	"POWER"
05-MH-P03	6'x6'x7'	"POWER"
05-MH-P04	3'x3'x3'	"POWER"
05-MH-S01	6'x6'x7'	"SIGNAL"
05-MH-S02	3'x3'x3'	"SIGNAL"
05-MH-S03	6'x6'x7'	"SIGNAL"
05-MH-S04	3'x3'x3'	"SIGNAL"

SHEET KEYNOTES

20	PROVIDE 100% SPARES IN THESE DUCTBANKS FOR USE IN FUTURE MBR AND BNR BASINS. WHERE CONDUITS EXTEND FROM DUCTBANK TO BASIN, STUB AND CAP THE DUPLICATE CONDUIT(S) AT THAT APPROXIMATE LOCATION. PROVIDE A UNIQUE IDENTIFIER TO EACH SPARE CONDUIT AND CLEARLY MARK THE CONDUIT AT BOTH ENDS.

PANELBOARD: 05-LP-01 **BUS AMPS:** 600 **VOLTS:** 240/120
LOCATION: OUTSIDE **MAIN BKR AMPS:** 400 **PHASE:** 1
MOUNTING: SURFACE **WIRE:** 3

LOAD DESCRIPTION	KVA A	KVA B	CKT	BKR	BKR	CKT	KVA A	KVA B	LOAD DESCRIPTION
05-SWGR-01	4.0		1	20	100/ 2P	2	12.5		05-GEN-01
SITE LIGHTS		0.08	3	20		4		12.5	-
SPARE	0.0		5	20	100/ 2P	6	12.5		05-GEN-02 (FUT)
SPARE		0.0	7	20		8		12.5	-
SPARE	0.0		9	20	20	10	0.0		SPARE
SPARE		0.0	11	20		12		0.0	SPARE
SPARE	0.0		13	20	20	14	0.0		SPARE
SPARE		0.0	15	20		16		0.0	SPARE
SPARE	0.0		17	20	20	18	0.0		SPARE
SPARE		0.0	19	20	20	20		0.0	SPARE
SPARE	0.0		21	20	20	22	0.0		SPARE
SPARE		0.0	23	20	20	24		0.0	SPARE
	4.0	0.08	TOTAL				25.0	25.0	
	PHASE LOAD		TOTAL LOAD						
	29.0	25.08	54.1 KVA		225.3 A				

J-U-B ENGINEERS, INC.
J-U-B ENGINEERS, INC.
392. E. Winchester St., Suite 300
Salt Lake City, UT 84107
Phone: 801.547.0393
www.jub.com

Subconsultant:
Stantec
Stantec
2890 E Cottonwood Pkwy
Suite 300, Salt Lake City, Ut 84121
Tel: +1.801.617.3200
www.stantec.com

AGENCY

REVIEW

REUSE OF DRAWINGS
J-U-B SHALL RETAIN ALL COMMON LAW, STATUTORY, COPYRIGHT AND OTHER RESERVED RIGHTS OF THESE DRAWINGS, AND THE SAME SHALL NOT BE REUSED WITHOUT J-U-B'S PRIOR WRITTEN CONSENT. ANY REUSE WITHOUT WRITTEN CONSENT BY J-U-B WILL BE AT CLIENTS SOLE RISK AND WITHOUT LIABILITY OR LEGAL EXPOSURE TO J-U-B.

NO.	DESCRIPTION	BY	APP.	DATE
	REVISION			

SPANISH FORK & MAPLETON WRF
SPANISH FORK CITY CORPORATION

05 - SITE ELECTRICAL
SITE SCHEDULES

FILE : 55-20-124-05E-603
JUB PROJ. # : 55-20-124
DRAWN BY: KES
DESIGN BY: KES
CHECKED BY: SK
ONE INCH
AT FULL SIZE, IF NOT ONE INCH, SCALE ACCORDINGLY
LAST UPDATED: 7/5/2022

DRAWING:
05-E-603

SHEET: 593 OF 691

Plot Date:7/6/2022 8:32 AM Plotted By: Smith, Keith
Date Created:7/5/2022 C:\PW_WORKING\WTR\KEISMITH\D0202860\05-20-124-05E-603.DWG

10-MCC-01

10-MCC-01

J-U-B ENGINEERS, INC.

J-U-B ENGINEERS, INC.
392 E. Winchester St., Suite 300
Salt Lake City, UT 84107
Phone: 801.547.0393
www.jub.com

Subconsultant:

Stantec

Stantec
2890 E Cottonwood Pkwy
Suite 300, Salt Lake City, Ut
84121
Tel: +1.801.617.3200
www.stantec.com

AGENCY

REVIEW

REUSE OF DRAWINGS
J-U-B SHALL RETAIN ALL COMMON LAW, STATUTORY, COPYRIGHT AND OTHER RESERVED RIGHTS OF THESE DRAWINGS, AND THE SAME SHALL NOT BE REUSED WITHOUT J-U-B'S PRIOR WRITTEN CONSENT. ANY REUSE WITHOUT WRITTEN CONSENT BY J-U-B WILL BE AT CLIENTS SOLE RISK AND WITHOUT LIABILITY OR LEGAL EXPOSURE TO J-U-B.

NO.	DESCRIPTION	BY	APP'D	DATE
	REVISION			

SPANISH FORK & MAPLETON WRF
SPANISH FORK CITY CORPORATION

10 - HEADWORKS
SINGLE LINE DIAGRAM - I

FILE : 55-20-124-10E-001
JUB PROJ. # : 55-20-124
DRAWN BY: KES
DESIGN BY: KES
CHECKED BY: SK

ONE INCH
AT FULL SIZE, IF NOT ONE INCH, SCALE ACCORDINGLY

LAST UPDATED: 7/6/2022

DRAWING:
10-E-001

SHEET: 594 OF 691

Plot Date:7/6/2022 5:19 PM Plotted By: Datas, Tejashree
Date Created:7/6/2022 C:\PW_WORKING\WTR\TDATAS\D02026615\55-20-124-10E-001.DWG

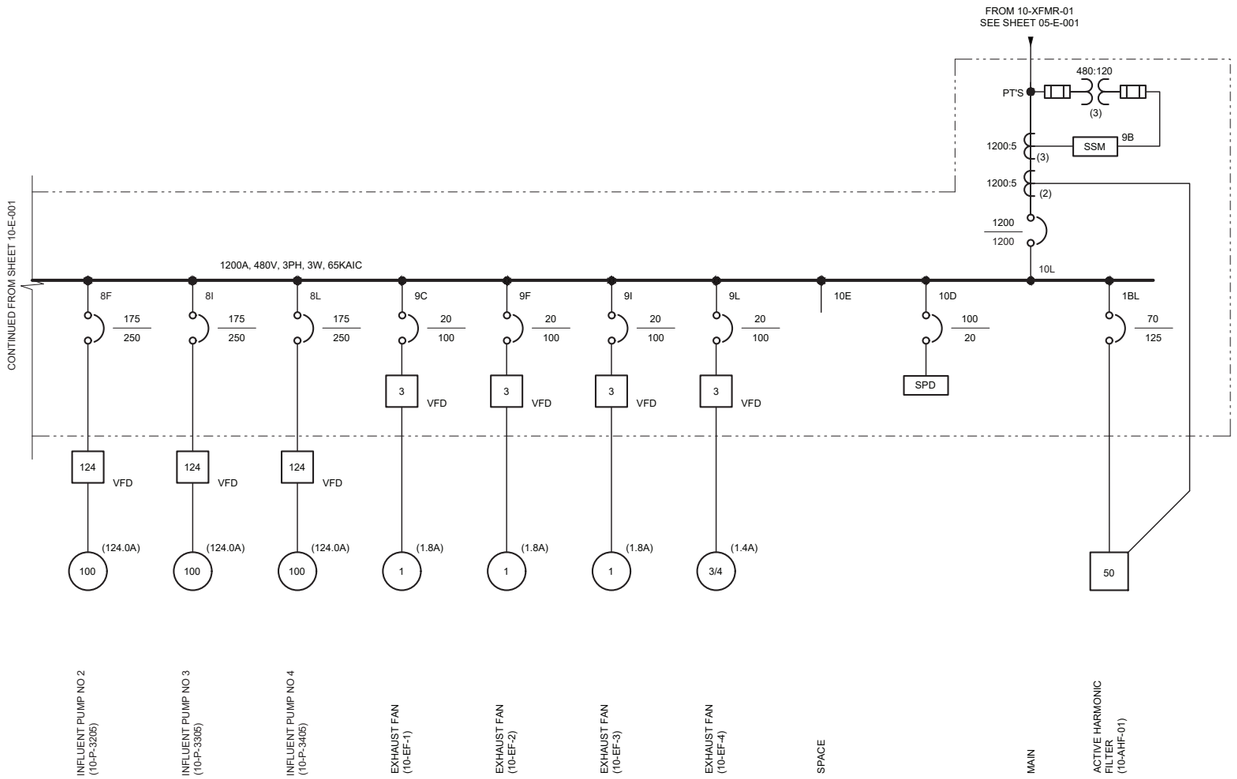

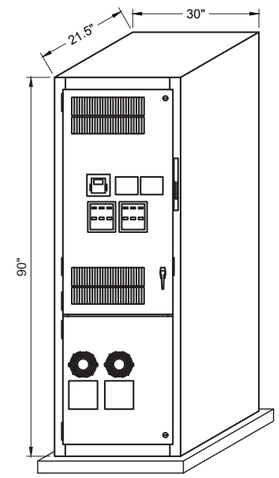

VFD (100 HP) ELEVATION

DIMENSIONS BASED ON
EATON "CPX" SERIES VFD

10-MCC-01

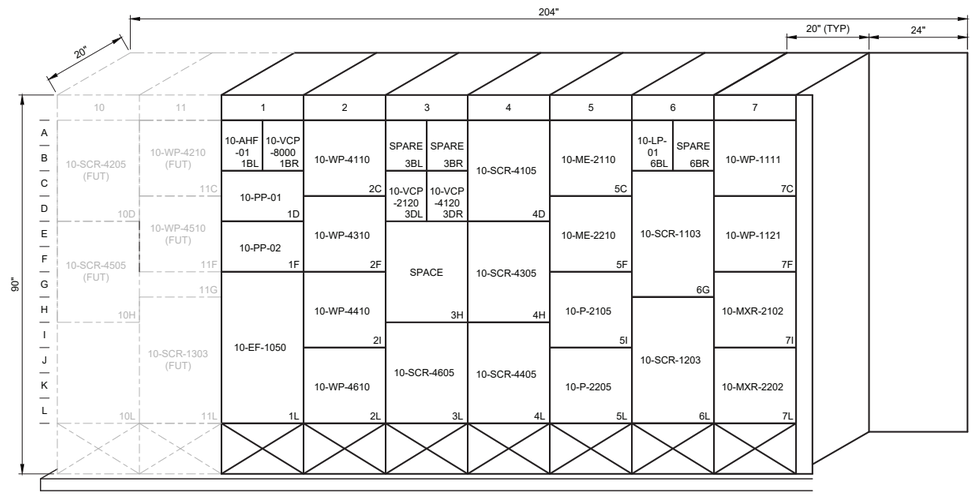

10-MCC-01 ELEVATION (LEFT SIDE)

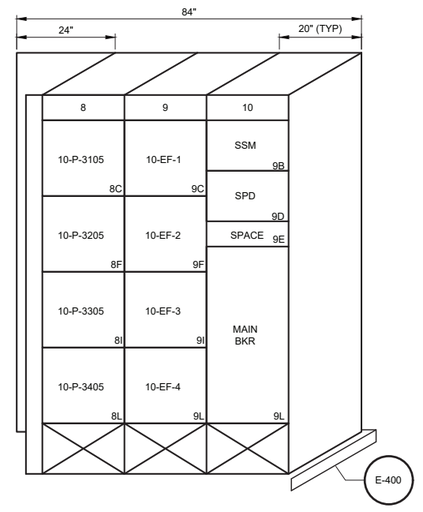

10-MCC-01 ELEVATION (RIGHT SIDE)

J-U-B ENGINEERS, INC.

J-U-B ENGINEERS, INC.
392. E. Winchester St., Suite 300
Salt Lake City, UT 84107
Phone: 801.547.0393
www.jub.com

Subconsultant:

Stantec

Stantec
2890 E Cottonwood Pkwy
Suite 300, Salt Lake City, Ut
84121
Tel: +1.801.617.3200
www.stantec.com

AGENCY

REVIEW

REUSE OF DRAWINGS
J-U-B SHALL RETAIN ALL COMMON LAW, STATUTORY, COPYRIGHT AND OTHER RESERVED RIGHTS OF THESE DRAWINGS, AND THE SAME SHALL NOT BE REUSED WITHOUT J-U-B'S PRIOR WRITTEN CONSENT. ANY REUSE WITHOUT WRITTEN CONSENT BY J-U-B WILL BE AT CLIENTS SOLE RISK AND WITHOUT LIABILITY OR LEGAL EXPOSURE TO J-U-B.

NO.	DESCRIPTION	BY	APP'D	DATE
	REVISION			

SPANISH FORK & MAPLETON WRF
SPANISH FORK CITY CORPORATION

10 - HEADWORKS
SINGLE LINE DIAGRAM - II

FILE : 55-20-124-10E-002
JUB PROJ. # : 55-20-124
DRAWN BY: KES
DESIGN BY: KES
CHECKED BY: SK

ONE INCH
AT FULL SIZE, IF NOT ONE INCH, SCALE ACCORDINGLY

LAST UPDATED: 7/6/2022

DRAWING:
10-E-002

SHEET: 595 OF 691

Plot Date:7/6/2022 5:19 PM Plotted By: Dadas, Tejashree
Date Created:7/6/2022 C:\PW_WORKING\WTR\TDADAS\D0202661\55-20-124-10E-002.DWG

LEGEND

CLASS 1 DIV 1

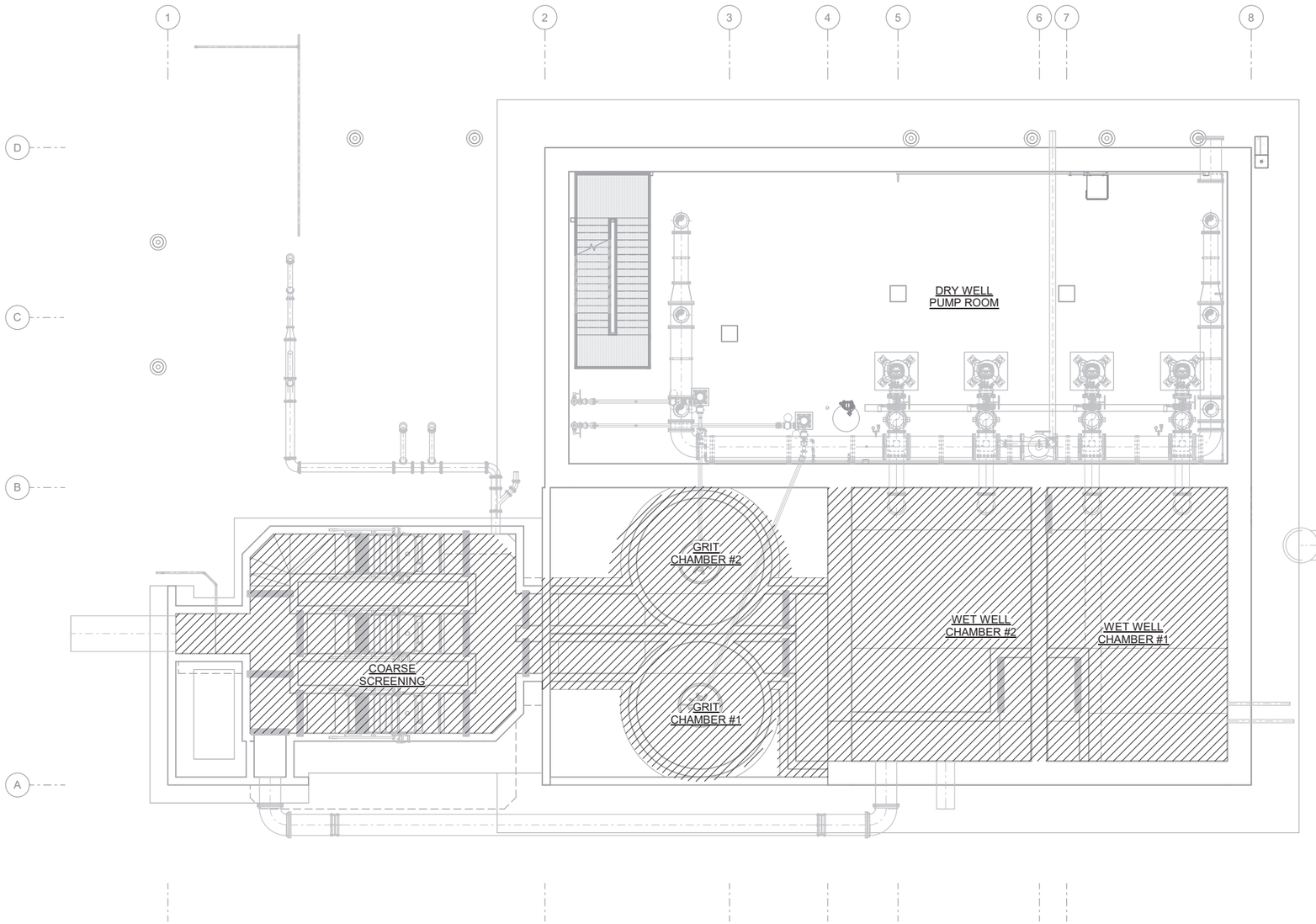

BASEMENT PLAN AREA CLASSIFICATION PLAN

SCALE: 1/8" = 1'-0"

7/8/2022 4:48:41 PM
BIM 360://Spanish Fork and Mapleton WRF Design/55-20-124_10e-md.rvt

J-U-B ENGINEERS, INC.

J-U-B ENGINEERS, INC.
392 E. Winchester St., Suite 300
Salt Lake City, UT 84107
Phone: 801.547.0393
www.jub.com

Subconsultant:

Stantec

Stantec
2890 E Cottonwood Pkwy
Ste 300
Salt Lake City, UT 84121
Tel: 801.617.3200
www.stantec.com

AGENCY

REVIEW

REUSE OF DRAWINGS

J-U-B SHALL RETAIN ALL COMMON LAW, STATUTORY, COPYRIGHT AND OTHER RESERVED RIGHTS OF THE INSTRUMENTS OF SERVICE PREPARED BY J-U-B AND NOT BE REUSED WITHOUT J-U-B'S PRIOR WRITTEN CONSENT. ANY REUSE WITHOUT WRITTEN CONSENT BY J-U-B WILL BE AT CLIENT'S SOLE RISK AND WITHOUT LIABILITY OR LEGAL EXPOSURE TO J-U-B.

NO.	DESCRIPTION	BY	APP.	DATE
	REVISION			

SPANISH FORK & MAPLETON WRF
SPANISH FORK CITY CORPORATION

10 - HEADWORKS
BASEMENT FLOOR AREA CLASSIFICATION PLAN

FILE:
JUB PROJ. #: 55-20-124
DRAWN BY: TBD
DESIGN BY: KES
CHECKED BY:SK

ONE INCH
AT FULL SIZE, IF NOT ONE INCH, SCALE ACCORDINGLY

LAST UPDATED: 07/08/2022

DRAWING:
10-E-101

SHEET: 596 OF 691

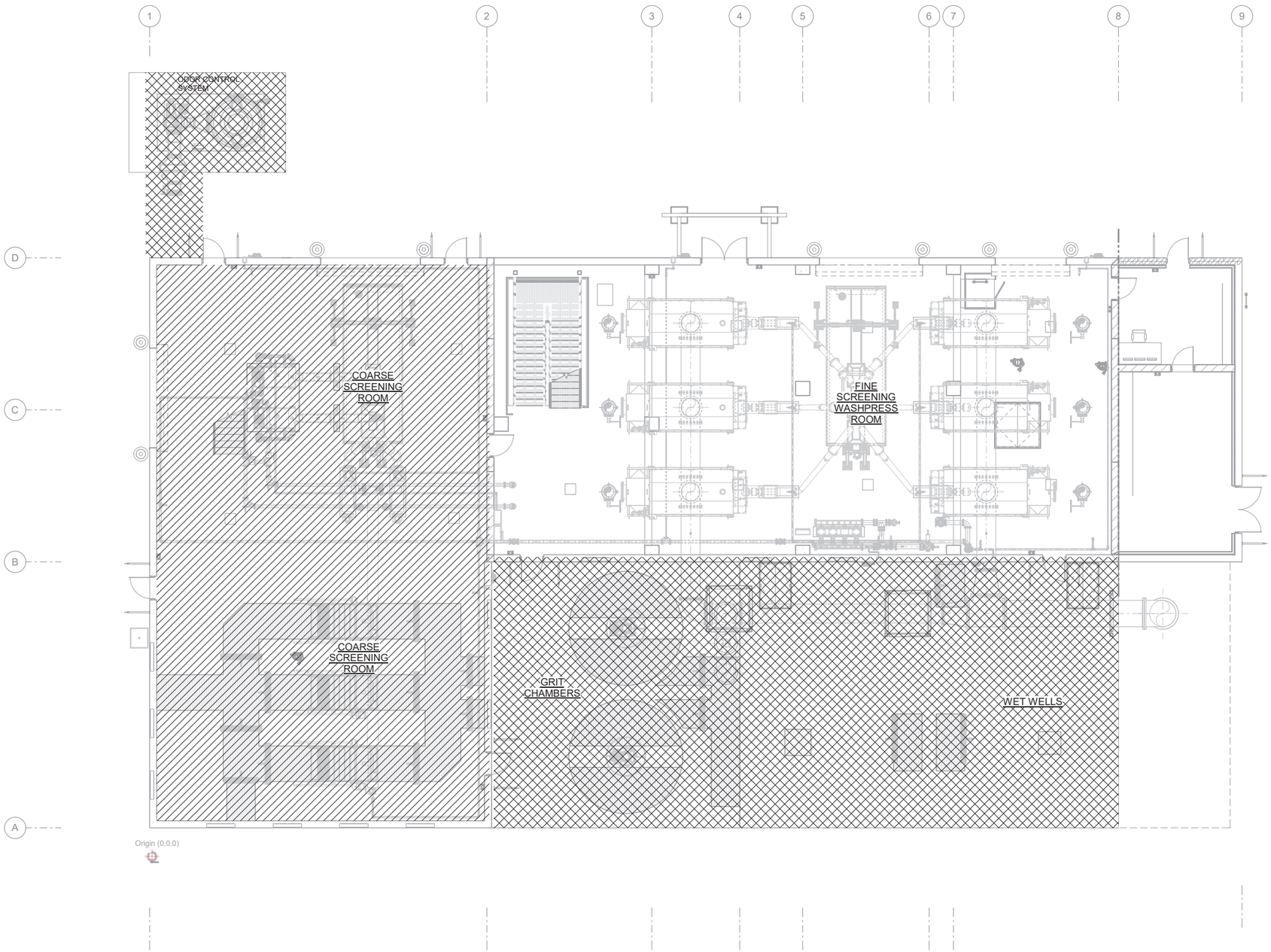

GROUND FLOOR AREA CLASSIFICATION PLAN

SCALE: 1/8" = 1'-0"

LEGEND

CLASS 1 DIV 1

CLASS 1 DIV 2

J-U-B ENGINEERS, INC.
J-U-B ENGINEERS, INC.
392. E. Winchester St., Suite 300
Salt Lake City, UT 84107
Phone: 801.547.0393
www.jub.com

Subconsultant:
Stantec
Stantec
2890 E Cottonwood Pkwy
Ste 300
Salt Lake City, UT 84121
Tel: 801.617.3200
www.stantec.com

AGENCY

REVIEW

REUSE OF DRAWINGS
J-U-B SHALL RETAIN ALL COMMON LAW, STATUTORY, COPYRIGHT AND OTHER RESERVED RIGHTS IN THE DRAWINGS AND OTHER DOCUMENTS PREPARED BY J-U-B. THE DRAWINGS SHALL NOT BE REUSED WITHOUT J-U-B'S PRIOR WRITTEN CONSENT. ANY REUSE WITHOUT WRITTEN CONSENT BY J-U-B WILL BE AT CLIENT'S SOLE RISK AND WITHOUT LIABILITY OR LEGAL EXPOSURE TO J-U-B.

NO.	DESCRIPTION	BY	APP.	DATE
	REVISION			

SPANISH FORK & MAPLETON WRF
SPANISH FORK CITY CORPORATION

10 - HEADWORKS
GROUND FLOOR AREA CLASSIFICATION PLAN

FILE:
JUB PROJ. #: 55-20-124
DRAWN BY: TBD
DESIGN BY: KES
CHECKED BY: SK
ONE INCH
AT FULL SIZE, IF NOT ONE INCH, SCALE ACCORDINGLY
LAST UPDATED: 07/08/2022

DRAWING:
10-E-102

SHEET: 597 OF 691

7/8/2022 4:50:33 PM
BIM 360://Spanish Fork and Mapleton WRF Design/55-20-124_10e-md.rvt

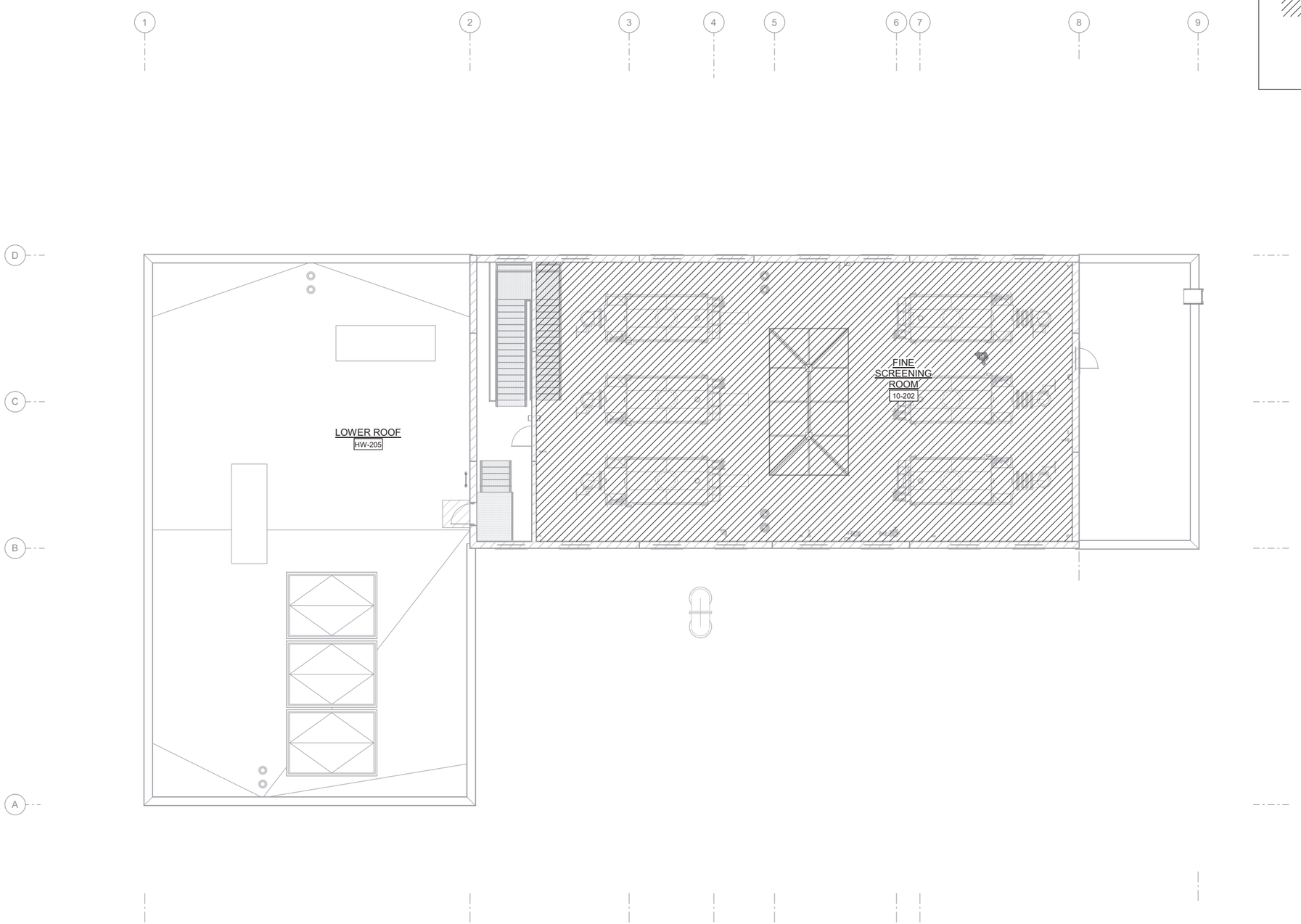

LEGEND

CLASS 1 DIV 1

UPPER FLOOR AREA CLASSIFICATION PLAN

SCALE: 1/8" = 1'-0"

J-U-B ENGINEERS, INC.

J-U-B ENGINEERS, INC.
392 E. Winchester St., Suite 300
Salt Lake City, UT 84107
Phone: 801.547.0393
www.jub.com

Subconsultant:

Stantec

Stantec
2890 E Cottonwood Pkwy
Ste 300
Salt Lake City, UT 84121
Tel: 801.617.3200
www.stantec.com

AGENCY

REVIEW

REUSE OF DRAWINGS

J-U-B SHALL RETAIN ALL COMMON LAW, STATUTORY, COPYRIGHT AND OTHER RESERVED RIGHTS IN THESE DRAWINGS. CONTRACTOR SHALL NOT REUSE NOT BE REUSED WITHOUT J-U-B'S PRIOR WRITTEN CONSENT. ANY REUSE WITHOUT WRITTEN CONSENT BY J-U-B WILL BE AT CLIENT'S SOLE RISK AND WITHOUT LIABILITY OR LEGAL EXPOSURE TO J-U-B.

NO.	DESCRIPTION	BY	APP.	DATE
	REVISION			

SPANISH FORK & MAPLETON WRF
SPANISH FORK CITY CORPORATION

10 - HEADWORKS
UPPER FLOOR AREA CLASSIFICATION PLAN

FILE:
JUB PROJ. #: 55-20-124
DRAWN BY: TBD
DESIGN BY: KES
CHECKED BY: SK
ONE INCH
AT FULL SIZE. IF NOT ONE INCH, SCALE ACCORDINGLY
LAST UPDATED: 07/08/2022

DRAWING:
10-E-103

SHEET: 598 OF 691

7/8/2022 4:51:01 PM
BIM 360://Spanish Fork and Mapleton WRF Design/55-20-124_10e-md.rvt

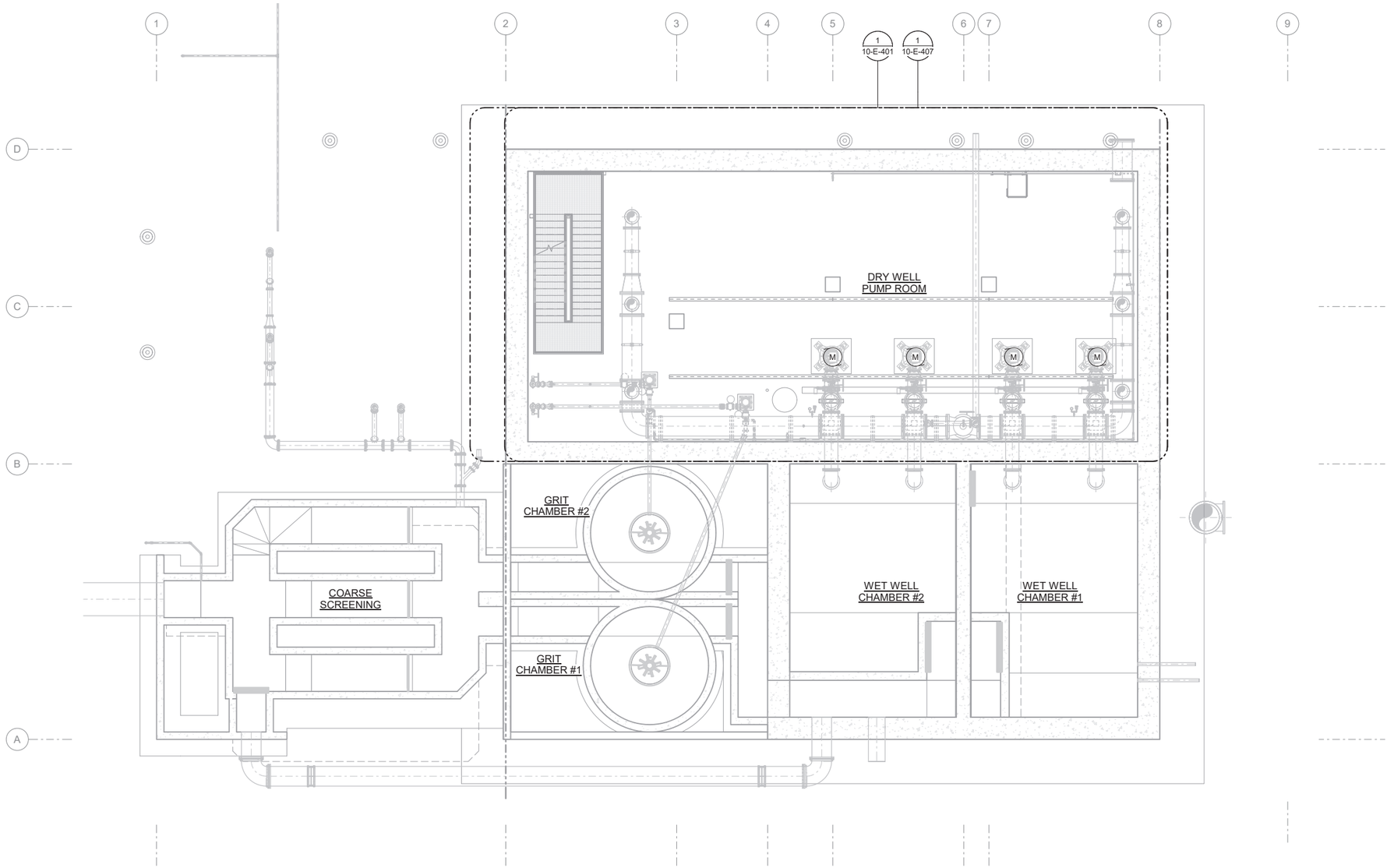

OVERALL BASEMENT FLOOR PLAN

SCALE: 1/8" = 1'-0"

7/8/2022 4:51:34 PM
BIM 360://Spanish Fork and Mapleton WRF Design/55-20-124_10e-md.rvt

J-U-B ENGINEERS, INC.

J-U-B ENGINEERS, INC.
392. E. Winchester St., Suite 300
Salt Lake City, UT 84107
Phone: 801.547.0393
www.jub.com

Subconsultant:

Stantec

Stantec
2890 E Cottonwood Pkwy
Ste 300
Salt Lake City, UT 84121
Tel: 801.617.3200
www.stantec.com

AGENCY

REVIEW

REUSE OF DRAWINGS

J-U-B SHALL RETAIN ALL COMMON LAW, STATUTORY, COPYRIGHT AND OTHER RESERVED RIGHTS IN THE USE OF DRAWINGS AND MATERIALS AND SHALL NOT BE REUSED WITHOUT J-U-B'S PRIOR WRITTEN CONSENT. ANY REUSE WITHOUT WRITTEN CONSENT BY J-U-B WILL BE AT CLIENT'S SOLE RISK AND WITHOUT LIABILITY OR LEGAL EXPOSURE TO J-U-B.

NO.	DESCRIPTION	BY	APP.	DATE
	REVISION			

SPANISH FORK & MAPLETON WRF
SPANISH FORK CITY CORPORATION

10 - HEADWORKS
OVERALL BASEMENT FLOOR PLAN

FILE:
JUB PROJ. #: 55-20-124
DRAWN BY: TBD
DESIGN BY: KES
CHECKED BY:SK
ONE INCH
AT FULL SIZE, IF NOT ONE INCH, SCALE ACCORDINGLY
LAST UPDATED: 07/08/2022

DRAWING:
10-E-104

SHEET: 599 OF 691

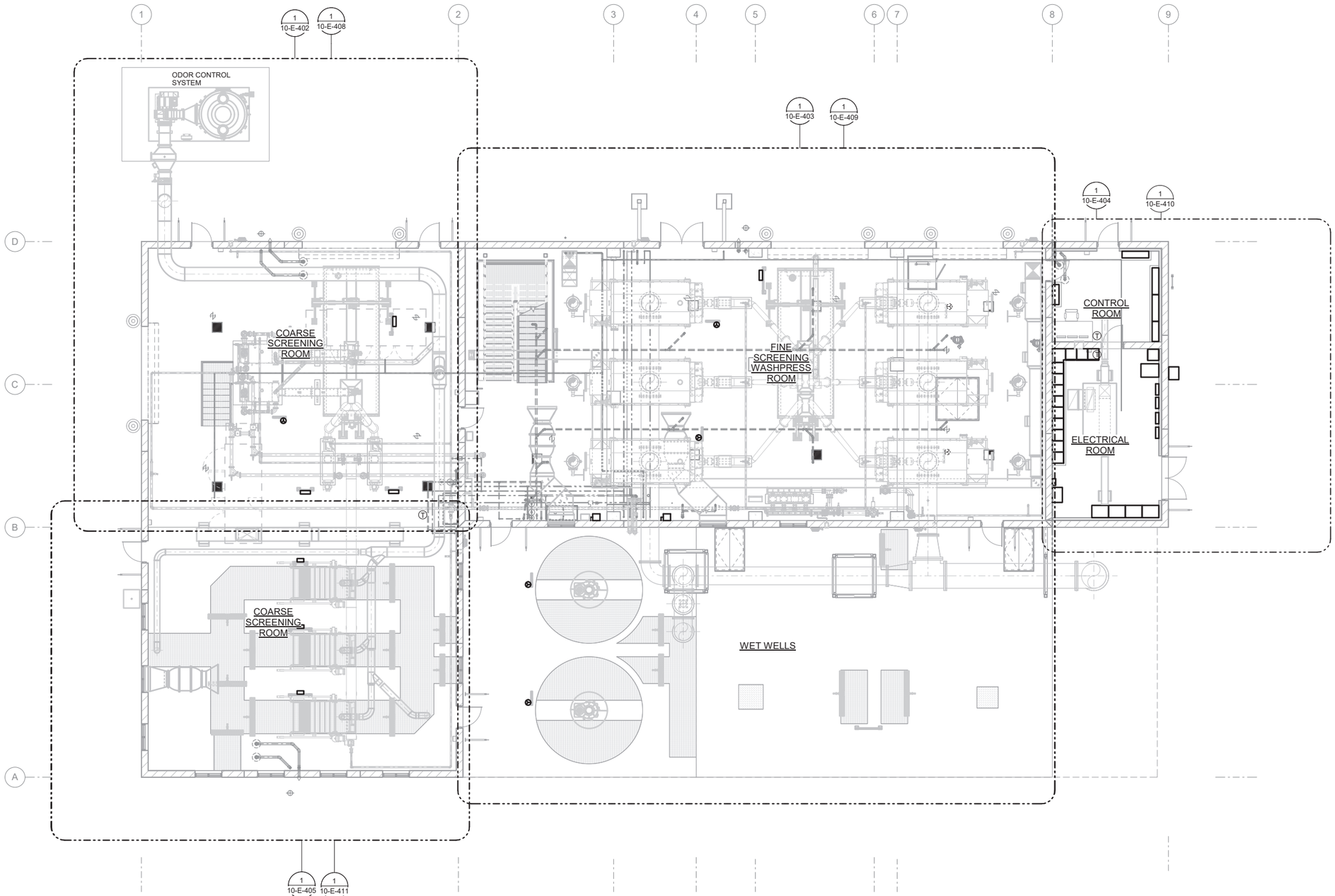

OVERALL GROUND FLOOR PLAN

SCALE: 1/8" = 1'-0"

7/8/2022 4:53:20 PM
BIM 360://Spanish Fork and Mapleton WRF Design/55-20-124_10e-md.rvt

J-U-B ENGINEERS, INC.

J-U-B ENGINEERS, INC.
392. E. Winchester St., Suite 300
Salt Lake City, UT 84107
Phone: 801.547.0393
www.jub.com

Subconsultant:

Stantec

Stantec
2890 E Cottonwood Pkwy
Ste 300
Salt Lake City, UT 84121
Tel: 801.617.3200
www.stantec.com

AGENCY

REVIEW

REUSE OF DRAWINGS

J-U-B SHALL RETAIN ALL COMMON LAW, STATUTORY, COPYRIGHT AND OTHER RESERVED RIGHTS IN THE SERVICES PROVIDED AND DRAWINGS PREPARED. ALL DRAWINGS, SPECIFICATIONS, OR OTHER DOCUMENTS PREPARED BY J-U-B SHALL NOT BE REUSED WITHOUT J-U-B'S PRIOR WRITTEN CONSENT. ANY REUSE WITHOUT WRITTEN CONSENT BY J-U-B WILL BE AT CLIENT'S SOLE RISK AND WITHOUT LIABILITY OR LEGAL EXPOSURE TO J-U-B.

NO.	DESCRIPTION	BY	APP'D	DATE

REVISION

SPANISH FORK & MAPLETON WRF
SPANISH FORK CITY CORPORATION

10 - HEADWORKS
OVERALL GROUND FLOOR PLAN

FILE:
JUB PROJ. #: 55-20-124
DRAWN BY: TBD
DESIGN BY: KES
CHECKED BY:SK

ONE INCH
AT FULL SIZE. IF NOT ONE INCH, SCALE ACCORDINGLY

LAST UPDATED: 07/08/2022

DRAWING:
10-E-105

SHEET: 600 OF 691

SHEET KEYNOTES

4	STUB CONDUITS FOR FUTURE EQUIPMENT IN THE SAME RELATIVE LOCATIONS AS THE CONDUITS FOR THE CURRENT EQUIPMENT ARE LOCATED. ENSURE CONDUIT IS CLEARLY TAGGED WHERE STUBBED UP.

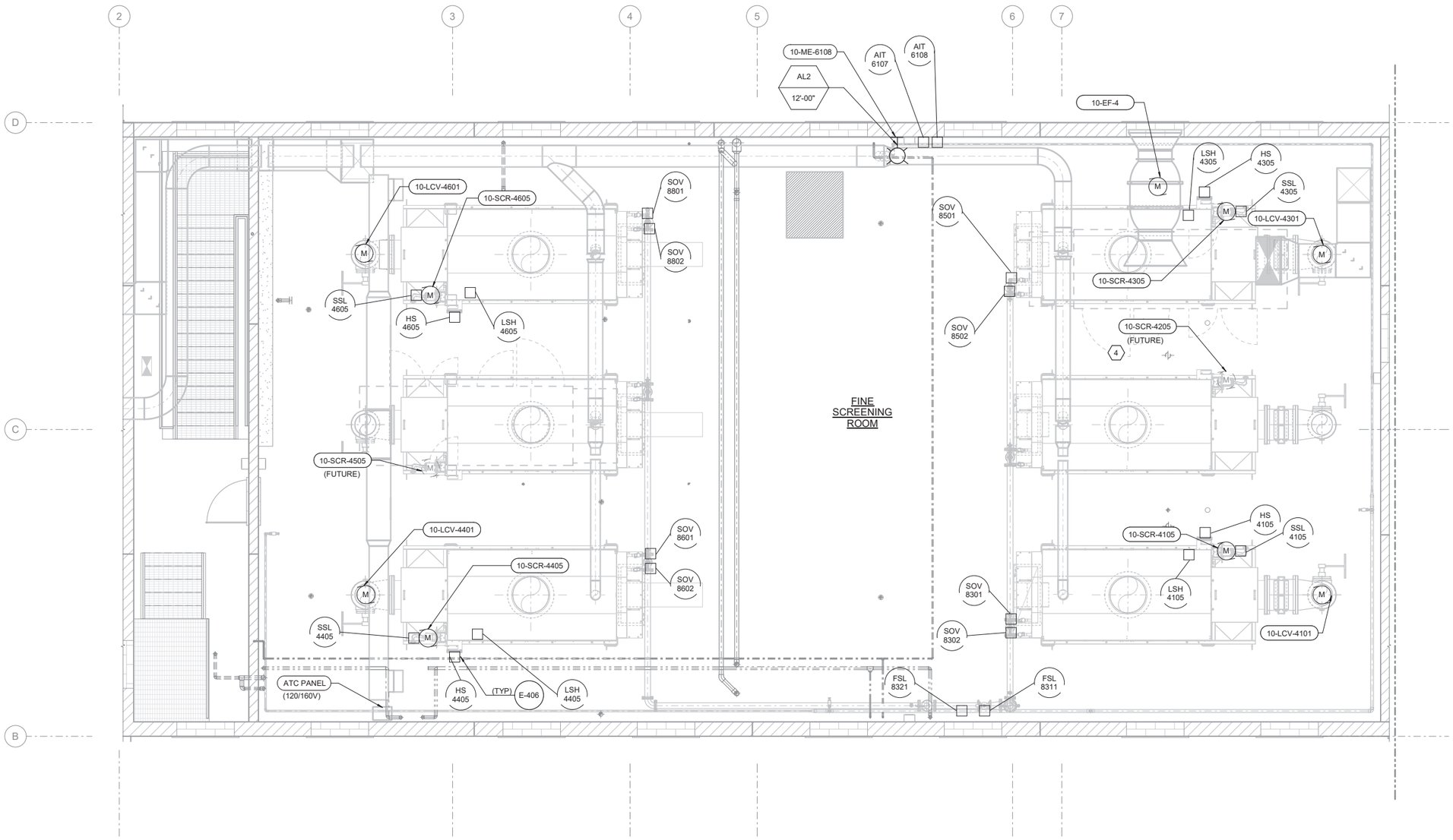

OVERALL UPPER FLOOR PLAN

SCALE: 1/4" = 1'-0"

J-U-B ENGINEERS, INC.

J-U-B ENGINEERS, INC.
392. E. Winchester St., Suite 300
Salt Lake City, UT 84107
Phone: 801.547.0393
www.jub.com

Subconsultant:

Stantec

Stantec
2890 E Cottonwood Pkwy
Ste 300
Salt Lake City, UT 84121
Tel: 801.617.3200
www.stantec.com

AGENCY

REVIEW

REUSE OF DRAWINGS

J-U-B SHALL RETAIN ALL COMMON LAW, STATUTORY, COPYRIGHT AND OTHER RESERVED RIGHTS IN THE DRAWINGS, SPECIFICATIONS, AND OTHER MATERIALS AND NOT BE REUSED WITHOUT J-U-B'S PRIOR WRITTEN CONSENT. ANY REUSE WITHOUT WRITTEN CONSENT BY J-U-B WILL BE AT CLIENT'S SOLE RISK AND WITHOUT LIABILITY OR LEGAL EXPOSURE TO J-U-B.

NO.	DESCRIPTION	BY	APP.	DATE
	REVISION			

SPANISH FORK & MAPLETON WRF
SPANISH FORK CITY CORPORATION

10 - HEADWORKS
OVERALL UPPER FLOOR PLAN

FILE:
JUB PROJ. #: 55-20-124
DRAWN BY: TBD
DESIGN BY: KES
CHECKED BY: SK

ONE INCH
AT FULL SIZE, IF NOT ONE INCH, SCALE ACCORDINGLY

LAST UPDATED: 07/08/2022

DRAWING:
10-E-106

SHEET: 601 OF 691

7/6/2022 4:53:49 PM
BIM 360://Spanish Fork and Mapleton WRF Design/55-20-124_10e-md.rvt

SHEET KEYNOTES

7	ROUTE CONDUITS FOR DEVICES IN COARSE SCREENINGS ROOM EXPOSED ALONG THIS WALL.

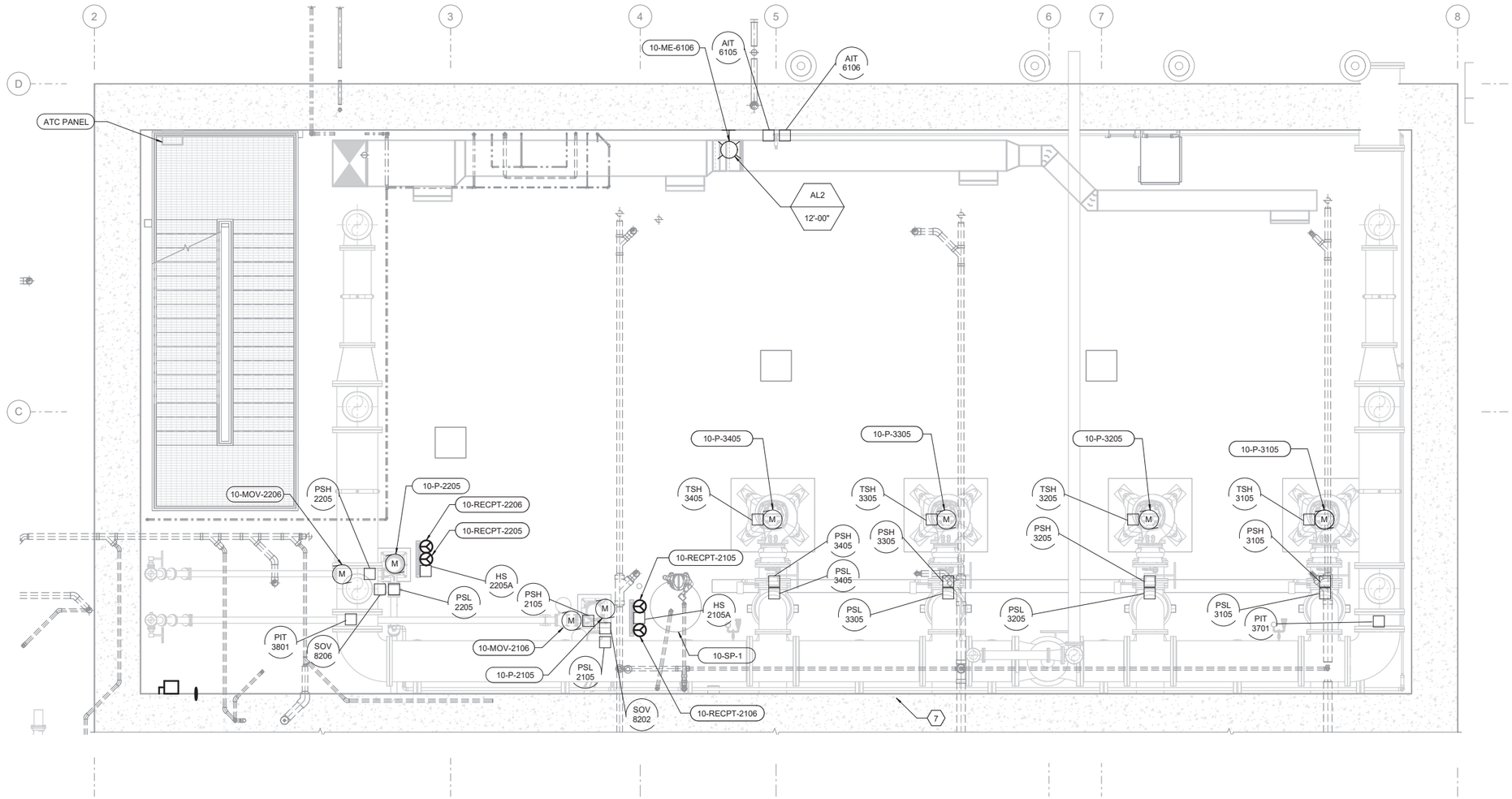

1 10-E-104 BASEMENT FLOOR PLAN

SCALE: 1/4" = 1'-0"

7/8/2022 4:54:00 PM
BIM 360://Spanish Fork and Mapleton WRF Design/55-20-124_10e-md.rvt

J-U-B ENGINEERS, INC.

J-U-B ENGINEERS, INC.
392 E. Winchester St., Suite 300
Salt Lake City, UT 84107
Phone: 801.547.0393
www.jub.com

Subconsultant:

Stantec

Stantec
2890 E Cottonwood Pkwy
Ste 300
Salt Lake City, UT 84121
Tel: 801.617.3200
www.stantec.com

AGENCY

REVIEW

REUSE OF DRAWINGS

J-U-B SHALL RETAIN ALL COMMON LAW, STATUTORY, COPYRIGHT AND OTHER RESERVED RIGHTS IN THESE DRAWINGS AND SPECIFICATIONS AND SHALL NOT BE REUSED WITHOUT J-U-B'S PRIOR WRITTEN CONSENT. ANY REUSE WITHOUT WRITTEN CONSENT BY J-U-B WILL BE AT CLIENT'S SOLE RISK AND WITHOUT LIABILITY OR LEGAL EXPOSURE TO J-U-B.

NO.	DESCRIPTION	BY	APP.	DATE
	REVISION			

SPANISH FORK & MAPLETON WRF
SPANISH FORK CITY CORPORATION

10 - HEADWORKS
BASEMENT FLOOR PLAN

FILE:
JUB PROJ. #: 55-20-124
DRAWN BY: TBD
DESIGN BY: KES
CHECKED BY:SK

ONE INCH
AT FULL SIZE, IF NOT ONE INCH, SCALE ACCORDINGLY

LAST UPDATED: 07/08/2022

DRAWING:
10-E-401

SHEET: 602 OF 691

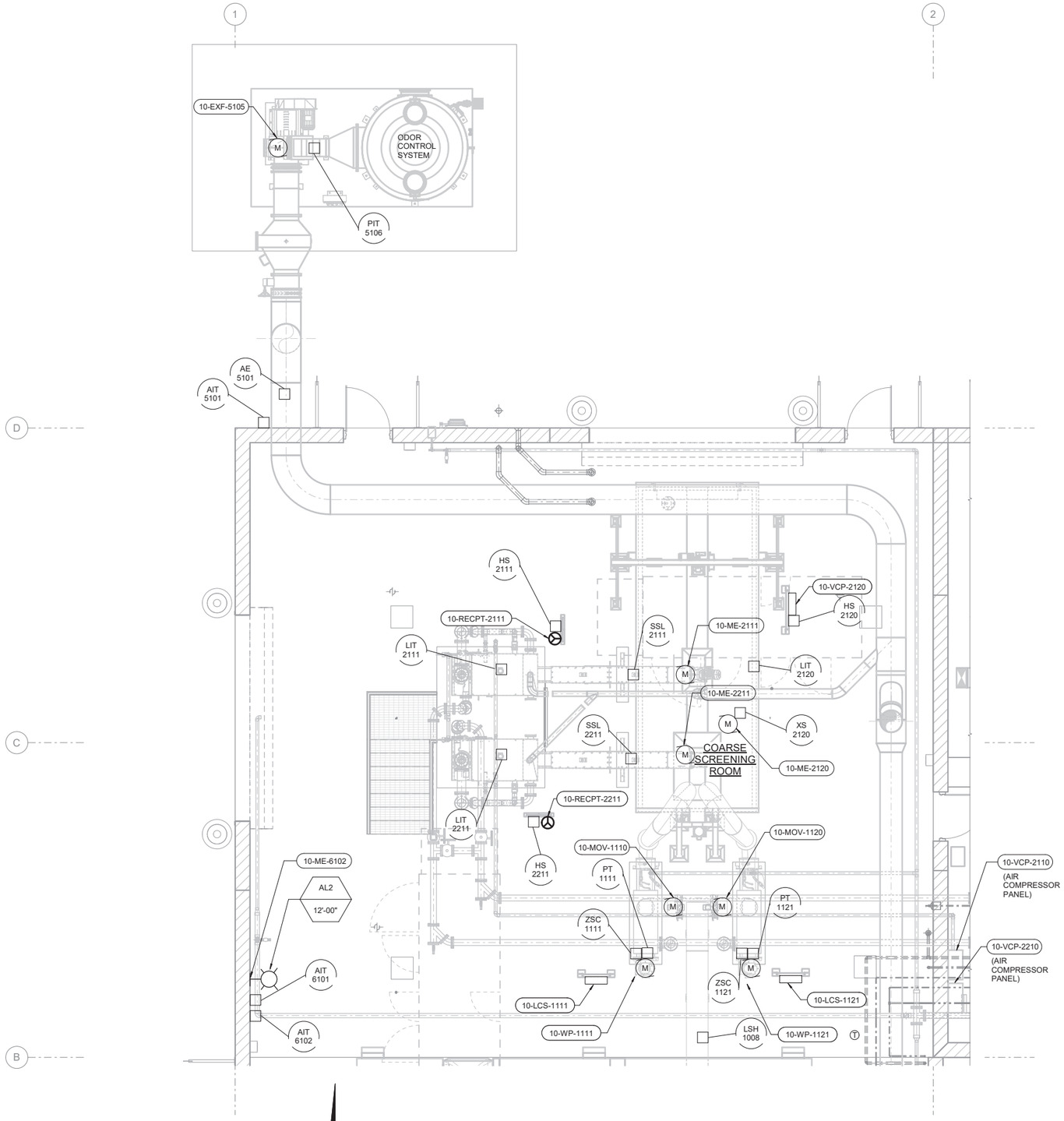

1 / 10-E-105 GROUND FLOOR PARTIAL PLAN - I

SCALE: 1/4" = 1'-0"

7/8/2022 4:56:34 PM
BIM 360://Spanish Fork and Mapleton WRF Design/55-20-124_10e-md.rvt

J-U-B ENGINEERS, INC.

J-U-B ENGINEERS, INC.
392. E. Winchester St., Suite 300
Salt Lake City, UT 84107
Phone: 801.547.0393
www.jub.com

Subconsultant:

Stantec

Stantec
2890 E Cottonwood Pkwy
Ste 300
Salt Lake City, UT 84121
Tel: 801.617.3200
www.stantec.com

AGENCY

REVIEW

REUSE OF DRAWINGS

J-U-B SHALL RETAIN ALL COMMON LAW, STATUTORY, COPYRIGHT AND OTHER RESERVED RIGHTS IN THE DRAWINGS, MATTER AND DESIGN SHALL NOT BE REUSED WITHOUT J-U-B'S PRIOR WRITTEN CONSENT. ANY REUSE WITHOUT WRITTEN CONSENT BY J-U-B WILL BE AT CLIENT'S SOLE RISK AND WITHOUT LIABILITY OR LEGAL EXPOSURE TO J-U-B.

NO.	DESCRIPTION	BY	APP'D	DATE

REVISION

SPANISH FORK & MAPLETON WRF
SPANISH FORK CITY CORPORATION

10 - HEADWORKS
GROUND FLOOR PARTIAL PLAN - I

FILE:
JUB PROJ. #: 55-20-124
DRAWN BY: TBD
DESIGN BY: KES
CHECKED BY: SK

ONE INCH
AT FULL SIZE, IF NOT ONE INCH, SCALE ACCORDINGLY

LAST UPDATED: 07/08/2022

DRAWING:
10-E-402

SHEET: 603 OF 691

SHEET KEYNOTES

4	STUB CONDUITS FOR FUTURE EQUIPMENT IN THE SAME RELATIVE LOCATIONS AS THE CONDUITS FOR THE CURRENT EQUIPMENT ARE LOCATED. ENSURE CONDUIT IS CLEARLY TAGGED WHERE STUBBED UP.

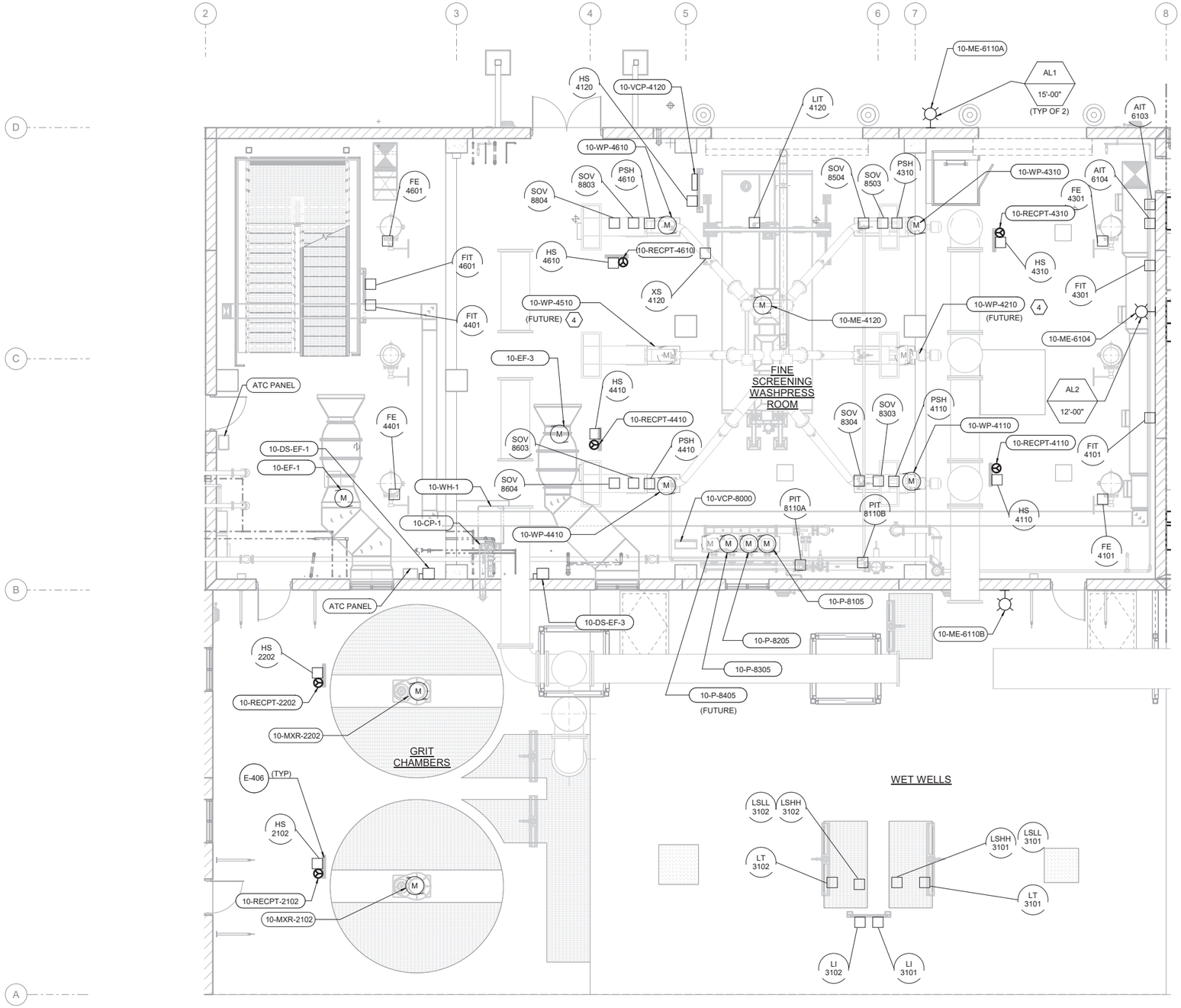

1 / 10-E-105 GROUND FLOOR PARTIAL PLAN - II

SCALE: 3/16" = 1'-0"

J-U-B ENGINEERS, INC.

J-U-B ENGINEERS, INC.
392. E. Winchester St., Suite 300
Salt Lake City, UT 84107
Phone: 801.547.0393
www.jub.com

Subconsultant:

Stantec
Stantec
2890 E Cottonwood Pkwy
Ste 300
Salt Lake City, UT 84121
Tel: 801.617.3200
www.stantec.com

AGENCY

REVIEW

REUSE OF DRAWINGS

J-U-B SHALL RETAIN ALL COMMON LAW, STATUTORY, COPYRIGHT AND OTHER RESERVED RIGHTS IN THE SET OF DRAWINGS. THE DRAWINGS SHALL NOT BE REUSED WITHOUT J-U-B'S PRIOR WRITTEN CONSENT. ANY REUSE WITHOUT WRITTEN CONSENT BY J-U-B WILL BE AT CLIENT'S SOLE RISK AND WITHOUT LIABILITY OR LEGAL EXPOSURE TO J-U-B.

NO.	DESCRIPTION	BY	APP.	DATE
	REVISION			

SPANISH FORK & MAPLETON WRF
SPANISH FORK CITY CORPORATION

10 - HEADWORKS
GROUND FLOOR PARTIAL PLAN - II

FILE:
JUB PROJ. #: 55-20-124
DRAWN BY: TBD
DESIGN BY: KES
CHECKED BY:SK

ONE INCH
AT FULL SIZE, IF NOT ONE INCH, SCALE ACCORDINGLY

LAST UPDATED: 07/08/2022

DRAWING:
10-E-403

SHEET: 604 OF 691

7/8/2022 4:54:43 PM
BIM 360://Spanish Fork and Mapleton WRF Design/55-20-124_10e-md.rvt

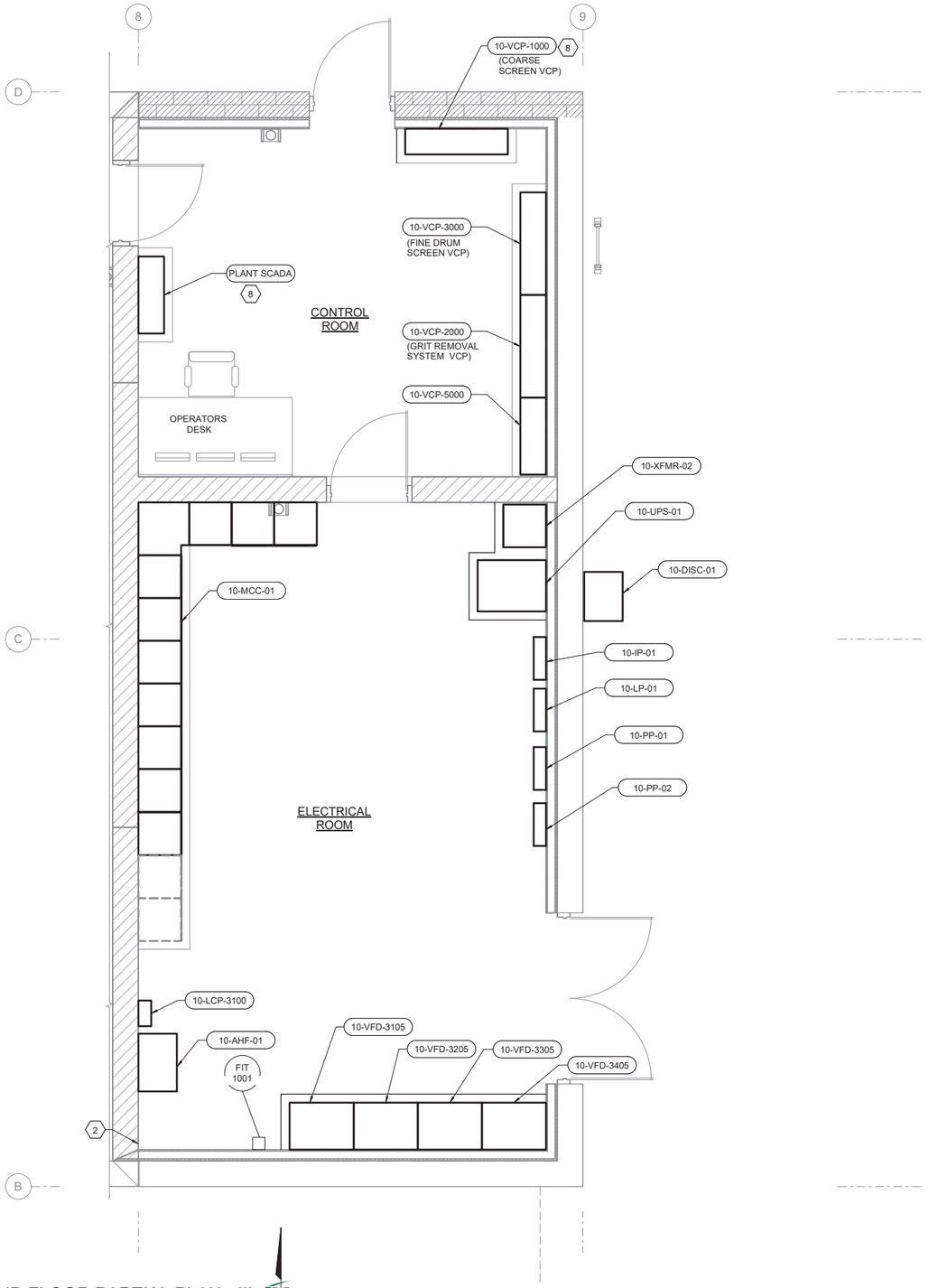

1 / 10-E-105 GROUND FLOOR PARTIAL PLAN - III

SCALE: 3/8" = 1'-0"

SHEET KEYNOTES

2	STUB AND CAP 4-3" CONDUITS IN CORNER OF ROOM TO PUMP ROOM BELOW FOR FUTURE INFLUENT PUMP VFDS
8	PROVIDE A SPARE 1 1/2" CONDUIT TO EACH OF THESE PANELS INTO THE DRYWELL SPACE BELOW AND CAP IN DRYWELL.

J-U-B ENGINEERS, INC.

J-U-B ENGINEERS, INC.
392. E. Winchester St., Suite 300
Salt Lake City, UT 84107
Phone: 801.547.0393
www.jub.com

Subconsultant:

Stantec

Stantec
2890 E Cottonwood Pkwy
Ste 300
Salt Lake City, UT 84121
Tel: 801.617.3200
www.stantec.com

AGENCY

REVIEW

REUSE OF DRAWINGS

J-U-B SHALL RETAIN ALL COMMON LAW, STATUTORY, COPYRIGHT AND OTHER RESERVED RIGHTS IN THE DRAWINGS, SPECIFICATIONS AND OTHER MATERIALS PREPARED BY J-U-B. THESE MATERIALS SHALL NOT BE REUSED WITHOUT J-U-B'S PRIOR WRITTEN CONSENT. ANY REUSE WITHOUT WRITTEN CONSENT BY J-U-B WILL BE AT CLIENT'S SOLE RISK AND WITHOUT LIABILITY OR LEGAL EXPOSURE TO J-U-B.

NO.	DESCRIPTION	BY	APP.	DATE
	REVISION			

SPANISH FORK & MAPLETON WRF
SPANISH FORK CITY CORPORATION

10 - HEADWORKS
GROUND FLOOR PARTIAL PLAN - III

FILE:
JUB PROJ. #: 55-20-124
DRAWN BY: TBD
DESIGN BY: KES
CHECKED BY:SK

ONE INCH
AT FULL SIZE, IF NOT ONE INCH, SCALE ACCORDINGLY

LAST UPDATED: 07/08/2022

DRAWING:
10-E-404

SHEET: 605 OF 691

7/8/2022 4:54:44 PM
BIM 360://Spanish Fork and Mapleton WRF Design/55-20-124_10e-md.rvt

SHEET KEYNOTES

8	PROVIDE A SPARE 1 1/2" CONDUIT TO EACH OF THESE PANELS INTO THE DRYWELL SPACE BELOW AND CAP IN DRYWELL.
9	ALL DEVICES LOCATED SOUTH OF THE NORTH MOST CHANNEL SHALL BE FED VIA EXPOSED CONDUITS ROUTED OVERHEAD.

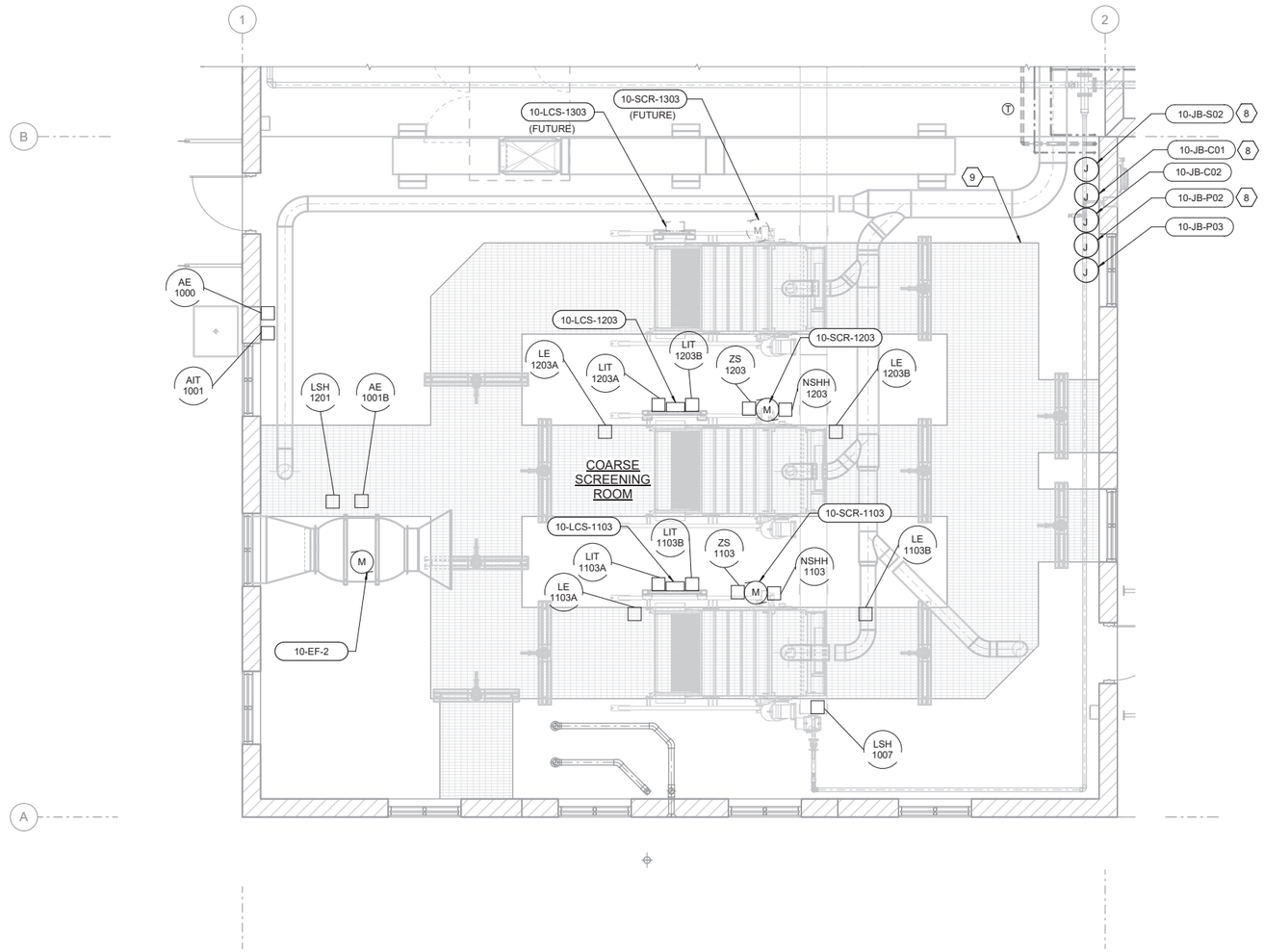

1 / 10-E-105 GROUND FLOOR PARTIAL PLAN - IV

SCALE: 1/4" = 1'-0"

7/8/2022 4:56:04 PM
BIM 360://Spanish Fork and Mapleton WRF Design/55-20-124_10e-md.rvt

J-U-B ENGINEERS, INC.

J-U-B ENGINEERS, INC.
392. E. Winchester St., Suite 300
Salt Lake City, UT 84107
Phone: 801.547.0393
www.jub.com

Subconsultant:

Stantec

Stantec
2890 E Cottonwood Pkwy
Ste 300
Salt Lake City, UT 84121
Tel: 801.617.3200
www.stantec.com

AGENCY

REVIEW

REUSE OF DRAWINGS

J-U-B SHALL RETAIN ALL COMMON LAW, STATUTORY, COPYRIGHT AND OTHER RESERVED RIGHTS IN THE DRAWINGS AND OTHER DOCUMENTS PREPARED BY J-U-B AND SHALL NOT BE REUSED WITHOUT J-U-B'S PRIOR WRITTEN CONSENT. ANY REUSE WITHOUT WRITTEN CONSENT BY J-U-B WILL BE AT CLIENT'S SOLE RISK AND WITHOUT LIABILITY OR LEGAL EXPOSURE TO J-U-B.

NO.	DESCRIPTION	BY	APP'D	DATE
	REVISION			

SPANISH FORK & MAPLETON WRF
SPANISH FORK CITY CORPORATION

10 - HEADWORKS
GROUND FLOOR PARTIAL PLAN - IV

FILE:
JUB PROJ. #: 55-20-124
DRAWN BY: TBD
DESIGN BY: KES
CHECKED BY:SK

ONE INCH
AT FULL SIZE. IF NOT ONE INCH, SCALE ACCORDINGLY

LAST UPDATED: 07/08/2022

DRAWING:
10-E-405

SHEET: 606 OF 691

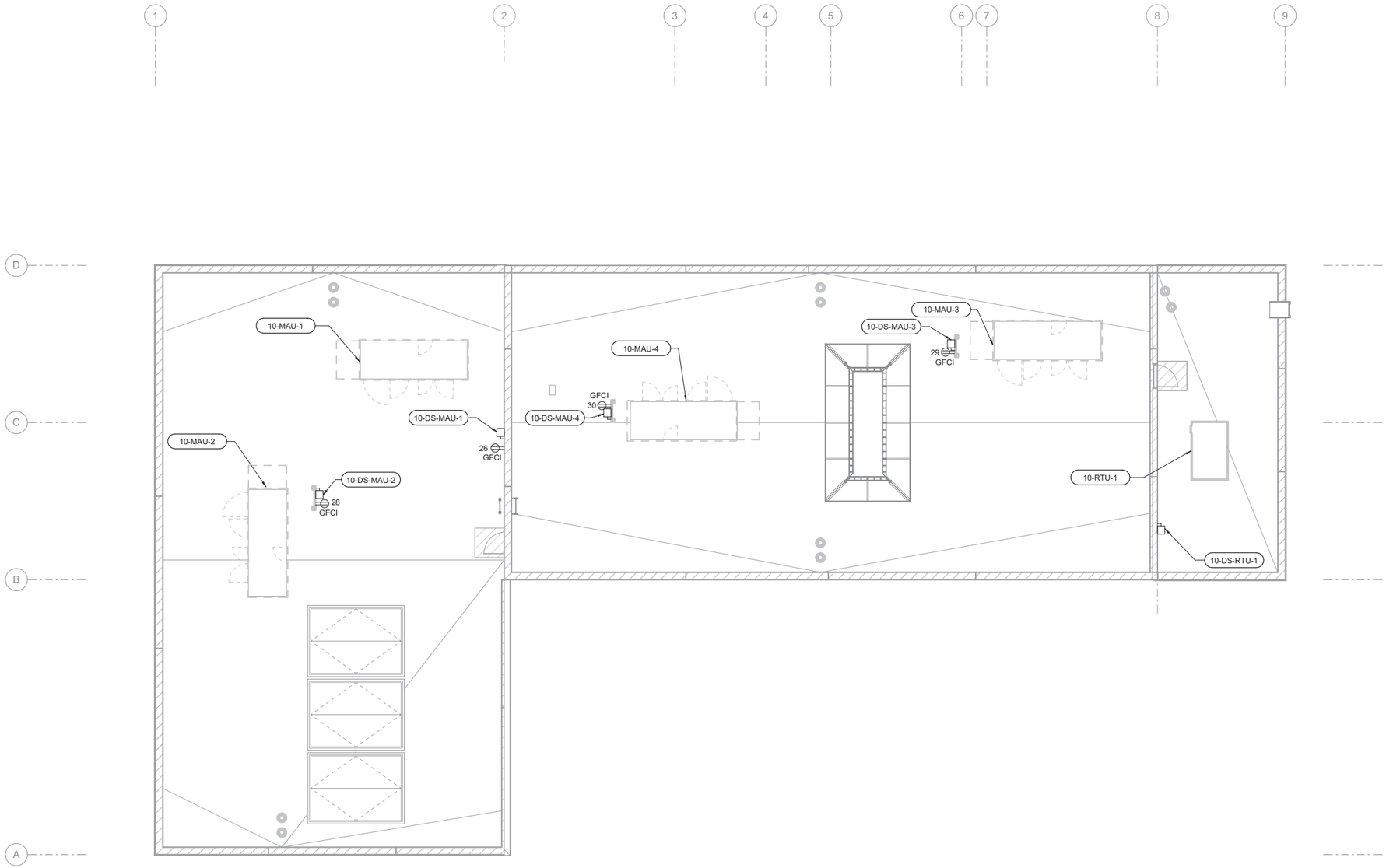

ROOF POWER PLAN

SCALE: 1/8" = 1'-0"

J-U-B ENGINEERS, INC.

J-U-B ENGINEERS, INC.
392. E. Winchester St., Suite 300
Salt Lake City, UT 84107
Phone: 801.547.0393
www.jub.com

Subconsultant:

Stantec

Stantec
2890 E Cottonwood Pkwy
Ste 300
Salt Lake City, UT 84121
Tel: 801.617.3200
www.stantec.com

AGENCY

REVIEW

REUSE OF DRAWINGS

J-U-B SHALL RETAIN ALL COMMON LAW, STATUTORY, COPYRIGHT AND OTHER RESERVED RIGHTS IN THE USE OF DRAWINGS AND MATERIALS. THEY SHALL NOT BE REUSED WITHOUT J-U-B'S PRIOR WRITTEN CONSENT. ANY REUSE WITHOUT WRITTEN CONSENT BY J-U-B WILL BE AT CLIENT'S SOLE RISK AND WITHOUT LIABILITY OR LEGAL EXPOSURE TO J-U-B.

NO.	DESCRIPTION	BY	APP.	DATE

REVISION

SPANISH FORK & MAPLETON WRF
SPANISH FORK CITY CORPORATION

10 - HEADWORKS
ROOF POWR PLAN

FILE:
JUB PROJ. #: 55-20-124
DRAWN BY: TBD
DESIGN BY: KES
CHECKED BY: SK

ONE INCH
AT FULL SIZE. IF NOT ONE INCH, SCALE ACCORDINGLY

LAST UPDATED: 07/08/2022

DRAWING:
10-E-406

SHEET: 607 OF 691

7/8/2022 4:55:05 PM
BIM 360://Spanish Fork and Mapleton WRF Design/55-20-124_10e-md.rvt

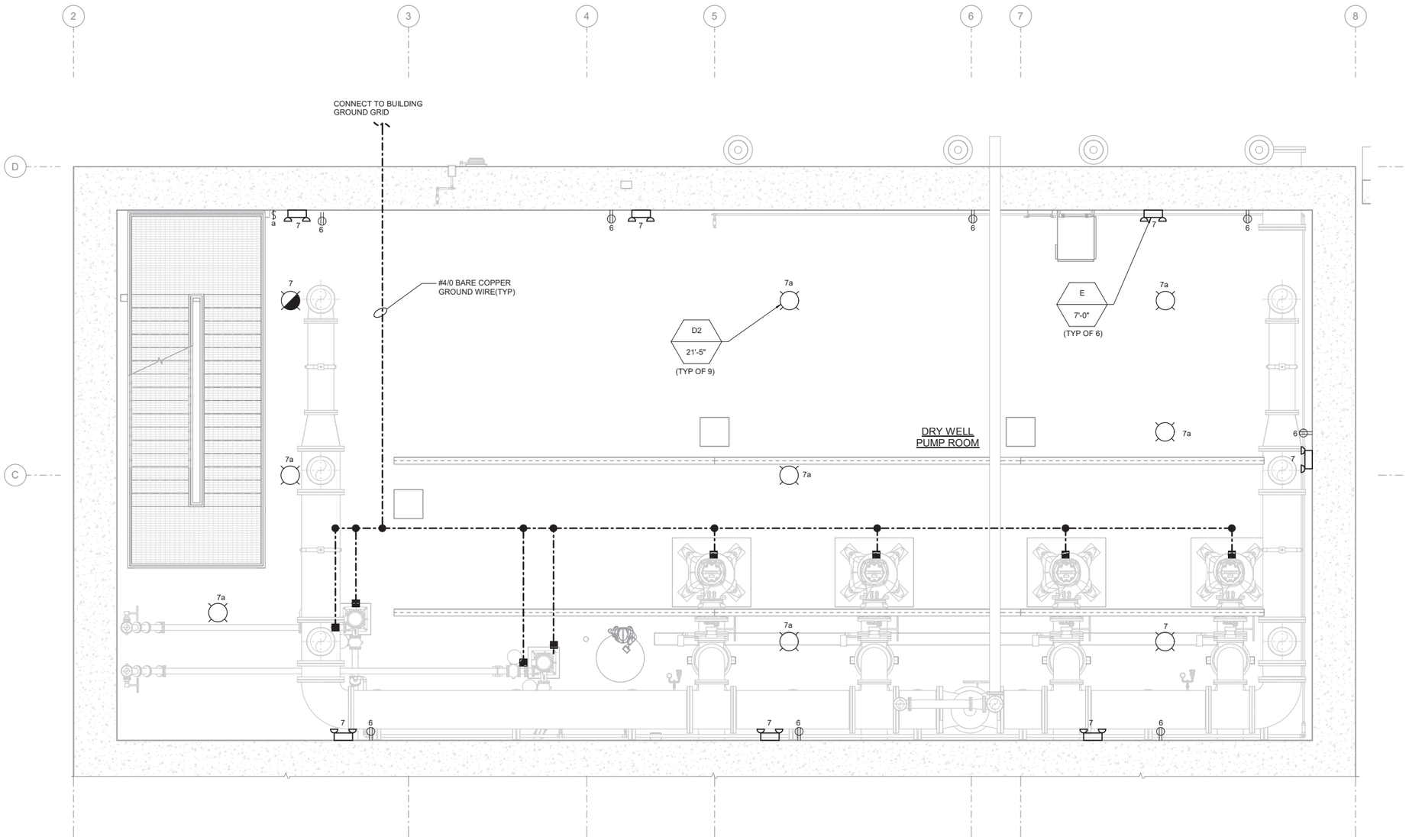

1 / 10-E-104 BASEMENT FLOOR LIGHTING, RECEPTACLE AND GROUNDING PLAN - I

SCALE: 1/4" = 1'-0"

7/8/2022 4:56:24 PM
BIM 360://Spanish Fork and Mapleton WRF Design/55-20-124_10e-md.rvt

J-U-B ENGINEERS, INC.

J-U-B ENGINEERS, INC.
392. E. Winchester St., Suite 300
Salt Lake City, UT 84107
Phone: 801.547.0393
www.jub.com

Subconsultant:

Stantec

Stantec
2890 E Cottonwood Pkwy
Ste 300
Salt Lake City, UT 84121
Tel: 801.617.3200
www.stantec.com

AGENCY

REVIEW

REUSE OF DRAWINGS

J-U-B SHALL RETAIN ALL COMMON LAW, STATUTORY, COPYRIGHT AND OTHER RESERVED RIGHTS IN THE DRAWINGS AND SPECIFICATIONS AND SHALL NOT BE REUSED WITHOUT J-U-B'S PRIOR WRITTEN CONSENT. ANY REUSE WITHOUT WRITTEN CONSENT BY J-U-B WILL BE AT CLIENT'S SOLE RISK AND WITHOUT LIABILITY OR LEGAL EXPOSURE TO J-U-B.

NO.	DESCRIPTION	BY	APP.	DATE
	REVISION			

SPANISH FORK & MAPLETON WRF
SPANISH FORK CITY CORPORATION

10 - HEADWORKS
BASEMENT FLOOR LIGHTING,RECEPTACLE AND GROUNDING PLAN - I

FILE:
JUB PROJ. #: 55-20-124
DRAWN BY: TBD
DESIGN BY: KES
CHECKED BY:SK

ONE INCH
AT FULL SIZE, IF NOT ONE INCH, SCALE ACCORDINGLY

LAST UPDATED: 07/08/2022

DRAWING:
10-E-407

SHEET: 608 OF 691

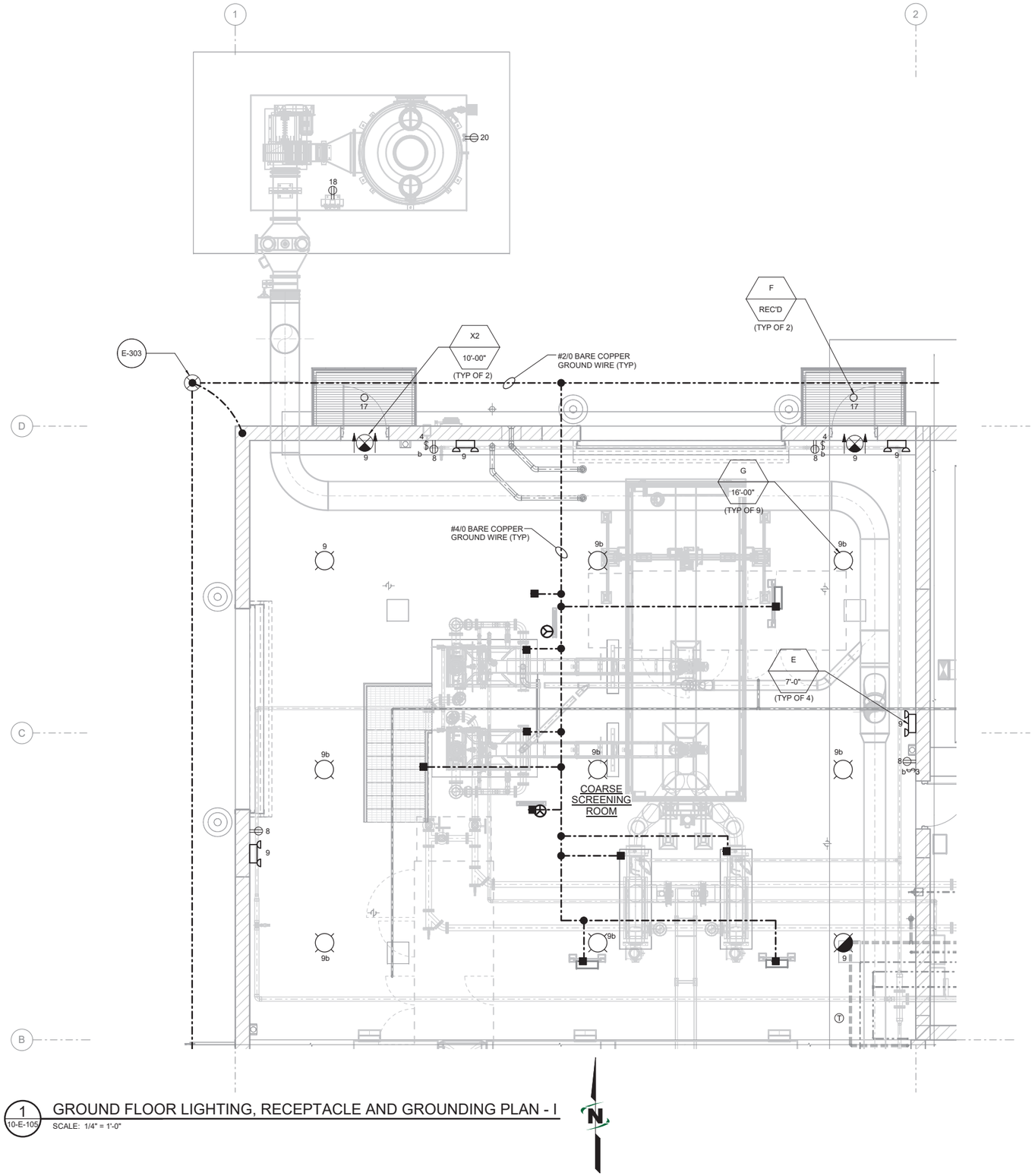

1 10-E-105 GROUND FLOOR LIGHTING, RECEPTACLE AND GROUNDING PLAN - I

SCALE: 1/4" = 1'-0"

7/8/2022 4:56:49 PM
BIM 360://Spanish Fork and Mapleton WRF Design/55-20-124_10e-md.rvt

J-U-B ENGINEERS, INC.

J-U-B ENGINEERS, INC.
392 E. Winchester St., Suite 300
Salt Lake City, UT 84107
Phone: 801.547.0393
www.jub.com

Subconsultant:

Stantec

Stantec
2890 E Cottonwood Pkwy
Ste 300
Salt Lake City, UT 84121
Tel: 801.617.3200
www.stantec.com

AGENCY

REVIEW

REUSE OF DRAWINGS

J-U-B SHALL RETAIN ALL COMMON LAW, STATUTORY, COPYRIGHT AND OTHER RESERVED RIGHTS IN THE DRAWINGS, SPECIFICATIONS, AND OTHER DOCUMENTS PREPARED BY J-U-B. SUCH DOCUMENTS SHALL NOT BE REUSED WITHOUT J-U-B'S PRIOR WRITTEN CONSENT. ANY REUSE WITHOUT WRITTEN CONSENT BY J-U-B WILL BE AT CLIENT'S SOLE RISK AND WITHOUT LIABILITY OR LEGAL EXPOSURE TO J-U-B.

NO.	DESCRIPTION	BY	APP'D	DATE

REVISION

SPANISH FORK & MAPLETON WRF
SPANISH FORK CITY CORPORATION

10 - HEADWORKS
GROUND FLOOR LIGHTING,RECEPTACLE AND GROUNDING PLAN - I

FILE:
JUB PROJ. #: 55-20-124
DRAWN BY: TBD
DESIGN BY: KES
CHECKED BY:SK

ONE INCH
AT FULL SIZE. IF NOT ONE INCH, SCALE ACCORDINGLY

LAST UPDATED: 07/08/2022

DRAWING:
10-E-408

SHEET: 609 OF 691

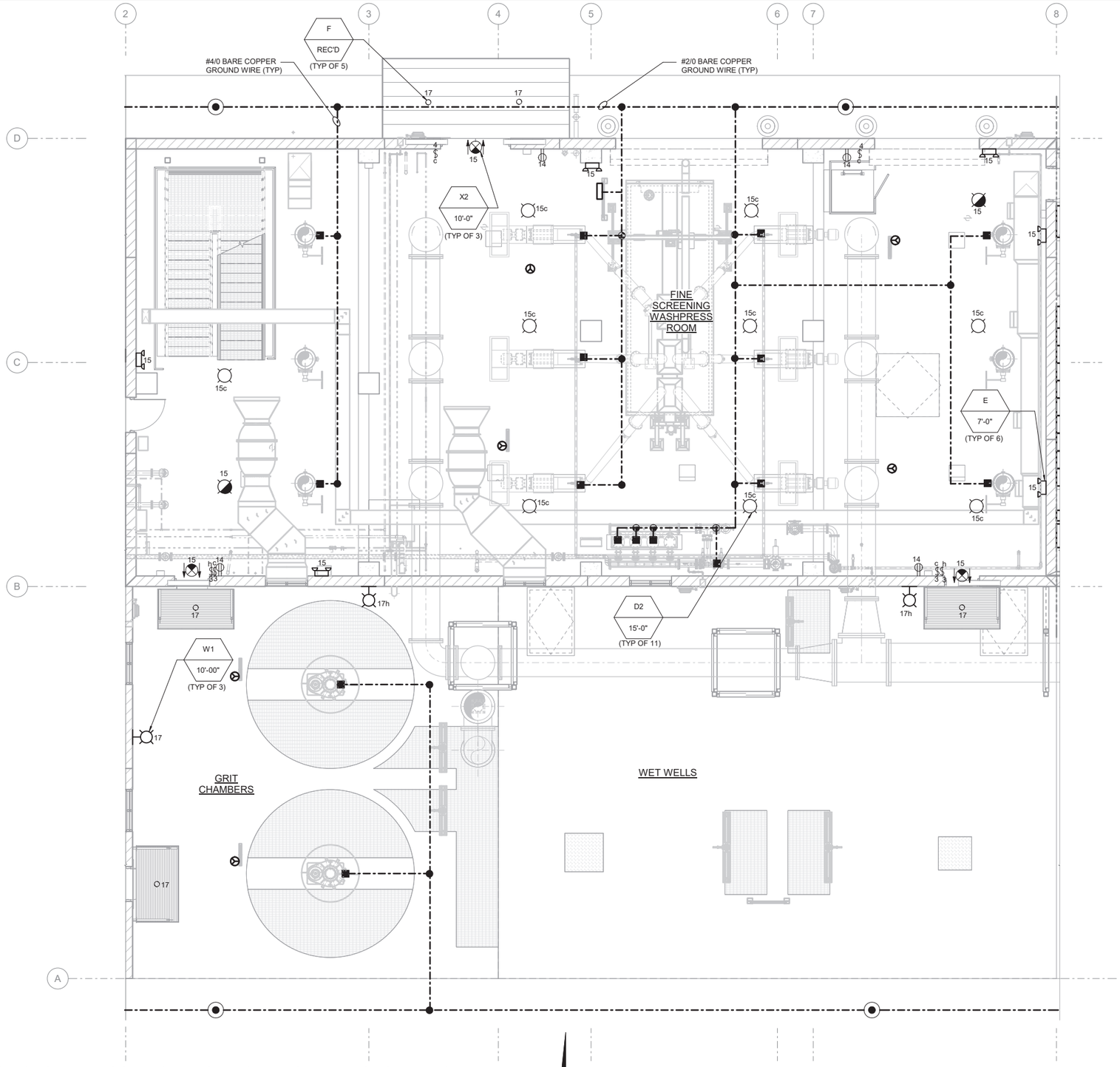

1 10-E-105 GROUND FLOOR LIGHTING, RECEPTACLE AND GROUNDING PLAN - II

SCALE: 3/16" = 1'-0"

J-U-B ENGINEERS, INC.

J-U-B ENGINEERS, INC.
392. E. Winchester St., Suite 300
Salt Lake City, UT 84107
Phone: 801.547.0393
www.jub.com

Subconsultant:

Stantec

Stantec
2890 E Cottonwood Pkwy
Ste 300
Salt Lake City, UT 84121
Tel: 801.617.3200
www.stantec.com

AGENCY

REVIEW

REUSE OF DRAWINGS

J-U-B SHALL RETAIN ALL COMMON LAW, STATUTORY, COPYRIGHT AND OTHER RESERVED RIGHTS IN THE DRAWINGS, SPECIFICATIONS, MATTER AND IDEAS AND SHALL NOT BE REUSED WITHOUT J-U-B'S PRIOR WRITTEN CONSENT. ANY REUSE WITHOUT WRITTEN CONSENT BY J-U-B WILL BE AT CLIENT'S SOLE RISK AND WITHOUT LIABILITY OR LEGAL EXPOSURE TO J-U-B.

NO.	DESCRIPTION	BY	APP'D	DATE
	REVISION			

SPANISH FORK & MAPLETON WRF
SPANISH FORK CITY CORPORATION

10 - HEADWORKS
GROUND FLOOR LIGHTING,RECEPTACLE AND GROUNDING PLAN - II

FILE:
JUB PROJ. #: 55-20-124
DRAWN BY: TBD
DESIGN BY: KES
CHECKED BY:SK

ONE INCH
AT FULL SIZE. IF NOT ONE INCH, SCALE ACCORDINGLY

LAST UPDATED: 07/08/2022

DRAWING:
10-E-409

SHEET: 610 OF 691

7/8/2022 4:56:00 PM
BIM 360://Spanish Fork and Mapleton WRF Design\55-20-124_10e-md.rvt

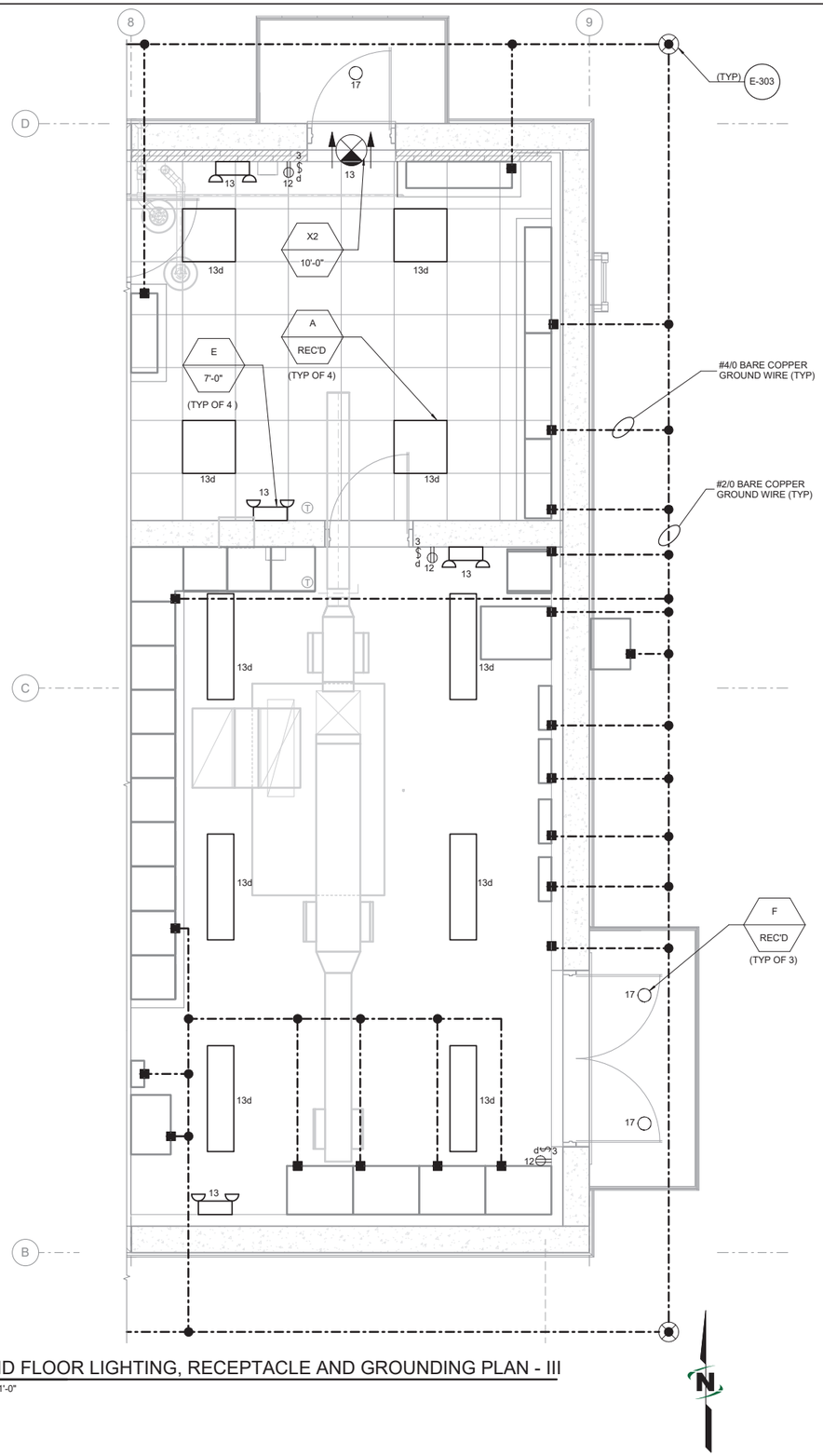

1 10-E-105 GROUND FLOOR LIGHTING, RECEPTACLE AND GROUNDING PLAN - III

SCALE: 3/8" = 1'-0"

7/8/2022 4:56:00 PM
BIM 360://Spanish Fork and Mapleton WRF Design/55-20-124_10e-md.rvt

J-U-B ENGINEERS, INC.

J-U-B ENGINEERS, INC.
392. E. Winchester St., Suite 300
Salt Lake City, UT 84107
Phone: 801.547.0393
www.jub.com

Subconsultant:

Stantec

Stantec
2890 E Cottonwood Pkwy
Ste 300
Salt Lake City, UT 84121
Tel: 801.617.3200
www.stantec.com

AGENCY

REVIEW

REUSE OF DRAWINGS

J-U-B SHALL RETAIN ALL COMMON LAW, STATUTORY, COPYRIGHT AND OTHER RESERVED RIGHTS IN THE DRAWINGS AND OTHER DOCUMENTS PREPARED BY J-U-B AND SHALL NOT BE REUSED WITHOUT J-U-B'S PRIOR WRITTEN CONSENT. ANY REUSE WITHOUT WRITTEN CONSENT BY J-U-B WILL BE AT CLIENT'S SOLE RISK AND WITHOUT LIABILITY OR LEGAL EXPOSURE TO J-U-B.

NO.	DESCRIPTION	BY	APP'D	DATE

REVISION

SPANISH FORK & MAPLETON WRF
SPANISH FORK CITY CORPORATION

10 - HEADWORKS
GROUND FLOOR LIGHTING,RECEPTACLE AND GROUNDING PLAN - III

FILE:
JUB PROJ. #: 55-20-124
DRAWN BY: TBD
DESIGN BY: KES
CHECKED BY:SK

ONE INCH
AT FULL SIZE, IF NOT ONE INCH, SCALE ACCORDINGLY

LAST UPDATED: 07/08/2022

DRAWING:
10-E-410

SHEET: 611 OF 691

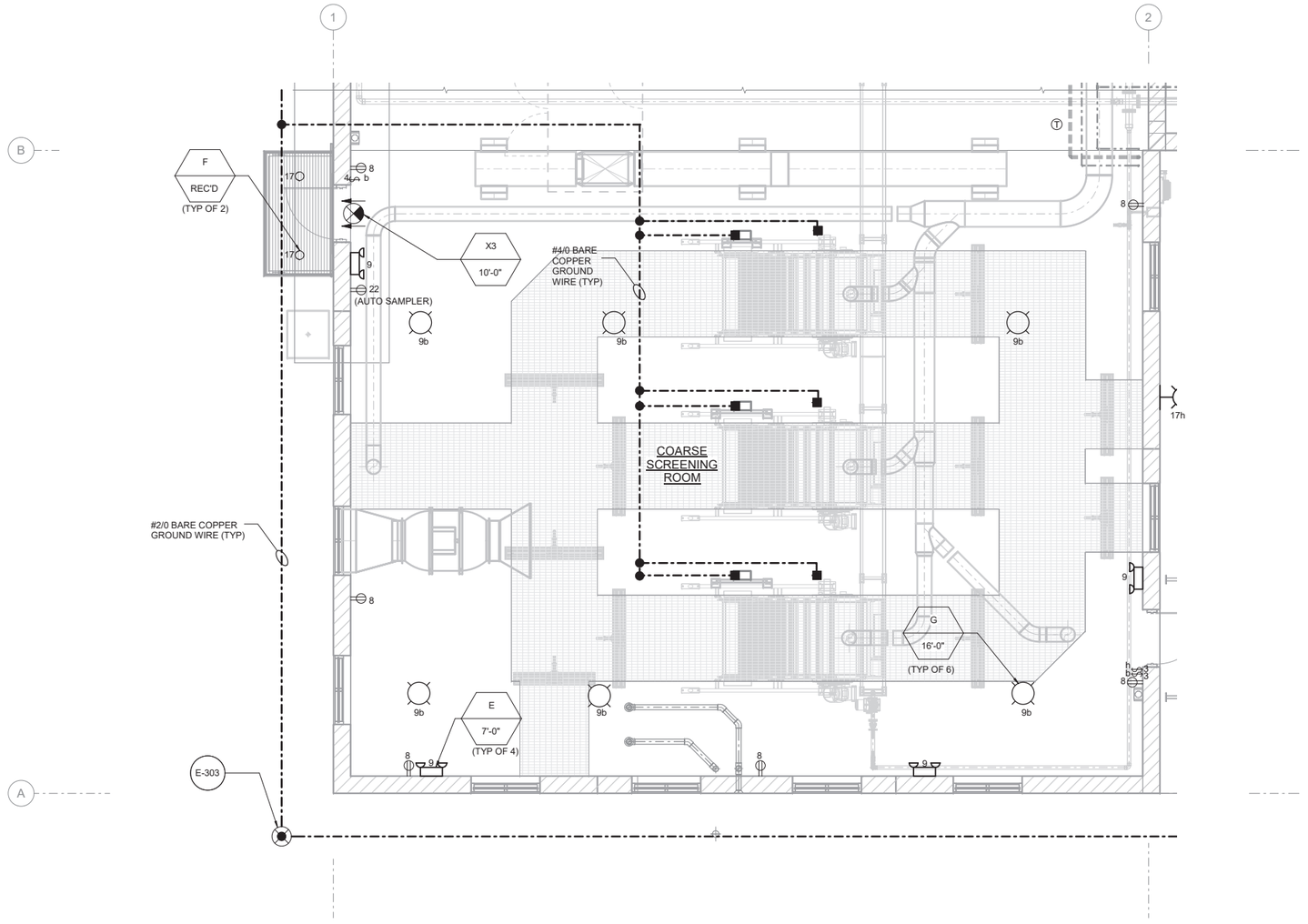

1 / 10-E-105 GROUND FLOOR LIGHTING,RECEPTACLE AND GROUNDING PLAN - IV

SCALE: 1/4" = 1'-0"

7/8/2022 4:56:06 PM
BIM 360://Spanish Fork and Mapleton WRF Design/55-20-124_10e-md.rvt

J-U-B ENGINEERS, INC.

J-U-B ENGINEERS, INC.
392. E. Winchester St., Suite 300
Salt Lake City, UT 84107
Phone: 801.547.0393
www.jub.com

Subconsultant:

Stantec

Stantec
2890 E Cottonwood Pkwy
Ste 300
Salt Lake City, UT 84121
Tel: 801.617.3200
www.stantec.com

AGENCY

REVIEW

REUSE OF DRAWINGS

J-U-B SHALL RETAIN ALL COMMON LAW, STATUTORY, COPYRIGHT AND OTHER RESERVED RIGHTS OF THE STANDARD OF PROFESSIONAL SERVICE. SHALL NOT BE REUSED WITHOUT J-U-B'S PRIOR WRITTEN CONSENT. ANY REUSE WITHOUT WRITTEN CONSENT BY J-U-B WILL BE AT CLIENT'S SOLE RISK AND WITHOUT LIABILITY OR LEGAL EXPOSURE TO J-U-B.

NO.	DESCRIPTION	BY	APP'D	DATE

REVISION

SPANISH FORK & MAPLETON WRF
SPANISH FORK CITY CORPORATION

10 - HEADWORKS
GROUND FLOOR LIGHTING,RECEPTACLE AND GROUNDING PLAN - IV

FILE:
JUB PROJ. #: 55-20-124
DRAWN BY: TBD
DESIGN BY: KES
CHECKED BY:SK

ONE INCH
AT FULL SIZE, IF NOT ONE INCH, SCALE ACCORDINGLY

LAST UPDATED: 07/08/2022

DRAWING:
10-E-411

SHEET: 612 OF 691

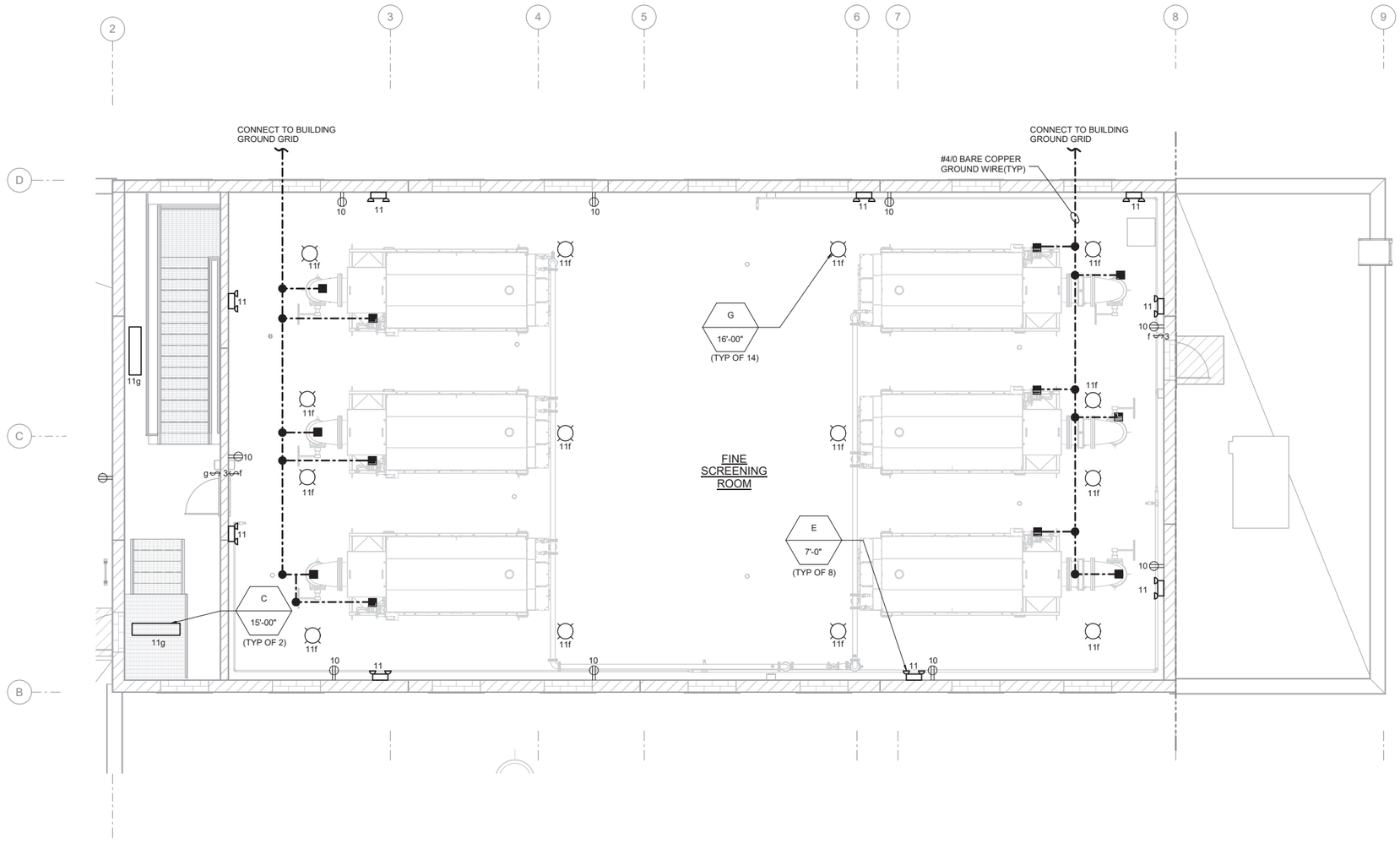

UPPER FLOOR LIGHTING, RECEPTACLE AND GROUNDING PLAN

SCALE: 3/16" = 1'-0"

J-U-B ENGINEERS, INC.

J-U-B ENGINEERS, INC.
392. E. Winchester St., Suite 300
Salt Lake City, UT 84107
Phone: 801.547.0393
www.jub.com

Subconsultant:

Stantec

Stantec
2890 E Cottonwood Pkwy
Ste 300
Salt Lake City, UT 84121
Tel: 801.617.3200
www.stantec.com

AGENCY

REVIEW

REUSE OF DRAWINGS

J-U-B SHALL RETAIN ALL COMMON LAW, STATUTORY, COPYRIGHT AND OTHER RESERVED RIGHTS IN THE DRAWINGS, SPECIFICATIONS AND OTHER MATERIALS THAT SHALL NOT BE REUSED WITHOUT J-U-B'S PRIOR WRITTEN CONSENT. ANY REUSE WITHOUT WRITTEN CONSENT BY J-U-B WILL BE AT CLIENT'S SOLE RISK AND WITHOUT LIABILITY OR LEGAL EXPOSURE TO J-U-B.

NO.	DESCRIPTION	BY	APP'D	DATE

REVISION

SPANISH FORK & MAPLETON WRF
SPANISH FORK CITY CORPORATION

10 - HEADWORKS

UPPER FLOOR LIGHTING,RECEPTACLE AND GROUNDING PLAN

FILE:
JUB PROJ. #: 55-20-124
DRAWN BY: TBD
DESIGN BY: KES
CHECKED BY:SK

ONE INCH
AT FULL SIZE, IF NOT ONE INCH, SCALE ACCORDINGLY

LAST UPDATED: 07/08/2022

DRAWING:
10-E-412

SHEET: 613 OF 691

7/8/2022 4:56:23 PM
BIM 360://Spanish Fork and Mapleton WRF Design/55-20-124_10e-md.rvt

J-U-B ENGINEERS, INC.

J-U-B ENGINEERS, INC.
392. E. Winchester St., Suite 300
Salt Lake City, UT 84107
Phone: 801.547.0393
www.jub.com

Subconsultant:

Stantec

Stantec
2890 E Cottonwood Pkwy
Suite 300, Salt Lake City, Ut
84121
Tel: +1.801.617.3200
www.stantec.com

AGENCY

REVIEW

REUSE OF DRAWINGS:
J-U-B SHALL RETAIN ALL COMMON LAW, STATUTORY, COPYRIGHT AND OTHER RESERVED RIGHTS OF THESE DRAWINGS, AND THE SAME SHALL NOT BE REUSED WITHOUT J-U-B'S PRIOR WRITTEN CONSENT. ANY REUSE WITHOUT WRITTEN CONSENT BY J-U-B WILL BE AT CLIENTS SOLE RISK AND WITHOUT LIABILITY OR LEGAL EXPOSURE TO J-U-B.

NO.	DESCRIPTION	BY	APP'L	DATE
	REVISION			

SPANISH FORK & MAPLETON WRF
SPANISH FORK CITY CORPORATION

10 - HEADWORKS
CONDUIT DEVELOPMENT - I

FILE : 55-20-124-10E-601
JUB PROJ. # : 55-20-124
DRAWN BY: KES
DESIGN BY: KES
CHECKED BY: SK

ONE INCH
AT FULL SIZE. IF NOT ONE INCH, SCALE ACCORDINGLY

LAST UPDATED: 7/6/2022

DRAWING:
10-E-601

SHEET: 614 OF 691

Plot Date:7/6/2022 5:10 PM Plotted By: Dadas, Tejashree
Date Created:7/5/2022 C:\PW_WORKING\WTR\TD\ADAS\D0202661\55-20-124-10E-601.DWG

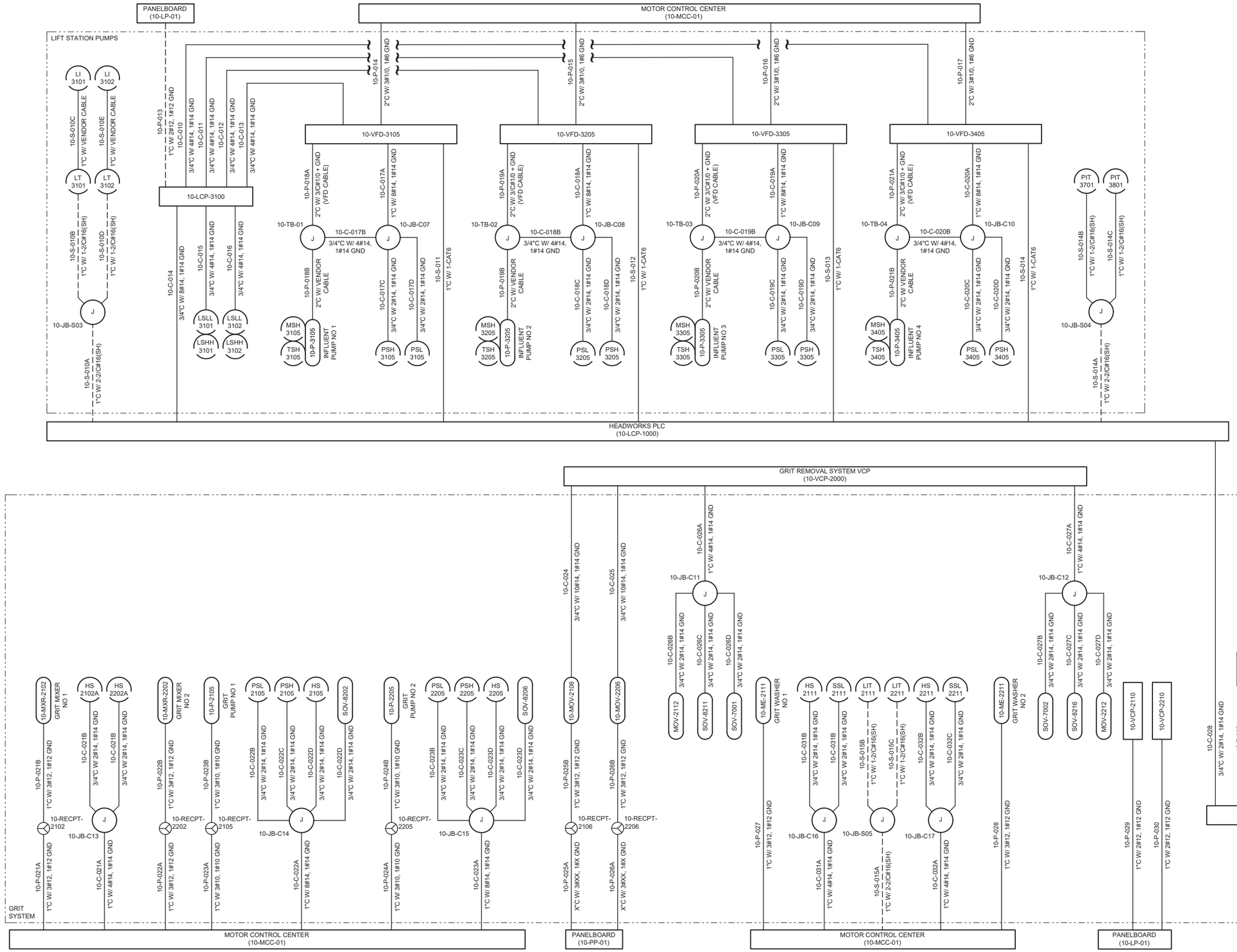

J-U-B ENGINEERS, INC.

J-U-B ENGINEERS, INC.
392 E. Winchester St., Suite 300
Salt Lake City, UT 84107
Phone: 801.547.0393
www.jub.com

Subconsultant:

Stantec

Stantec
2890 E Cottonwood Pkwy
Suite 300, Salt Lake City, Ut 84121
Tel: +1.801.617.3200
www.stantec.com

AGENCY

REVIEW

REUSE OF DRAWINGS
J-U-B SHALL RETAIN ALL COMMON LAW, STATUTORY, COPYRIGHT AND OTHER RESERVED RIGHTS OF THESE DRAWINGS, AND THE SAME SHALL NOT BE REUSED WITHOUT J-U-B'S PRIOR WRITTEN CONSENT. ANY REUSE WITHOUT WRITTEN CONSENT BY J-U-B WILL BE AT CLIENT'S SOLE RISK AND WITHOUT LIABILITY OR LEGAL EXPOSURE TO J-U-B.

NO.	DESCRIPTION	BY	APP'L	DATE
	REVISION			

SPANISH FORK & MAPLETON WRF
SPANISH FORK CITY CORPORATION

10 - HEADWORKS
CONDUIT DEVELOPMENT - II

FILE : 55-20-124-10E-602
JUB PROJ. # : 55-20-124
DRAWN BY: KES
DESIGN BY: KES
CHECKED BY: SK

ONE INCH
AT FULL SIZE, IF NOT ONE INCH, SCALE ACCORDINGLY

LAST UPDATED: 7/6/2022

DRAWING:
10-E-602

SHEET: 615 OF 691

Plot Date:7/6/2022 5:11 PM Plotted By: Dadas, Tejae/hmw
Date Created:7/5/2022 C:\PW_WORKINGSWTR\TDADAS\D0202681\55-20-124-10E-602.DWG

J-U-B ENGINEERS, INC.

J-U-B ENGINEERS, INC.
392. E. Winchester St., Suite 300
Salt Lake City, UT 84107
Phone: 801.547.0393
www.jub.com

Subconsultant:

Stantec

Stantec
2890 E Cottonwood Pkwy
Suite 300, Salt Lake City, Ut 84121
Tel: +1.801.617.3200
www.stantec.com

AGENCY

REVIEW

REUSE OF DRAWINGS
J-U-B SHALL RETAIN ALL COMMON LAW, STATUTORY, COPYRIGHT AND OTHER RESERVED RIGHTS OF THESE DRAWINGS, AND THE SAME SHALL NOT BE REUSED WITHOUT J-U-B'S PRIOR WRITTEN CONSENT. ANY REUSE WITHOUT WRITTEN CONSENT BY J-U-B WILL BE AT CLIENTS SOLE RISK AND WITHOUT LIABILITY OR LEGAL EXPOSURE TO J-U-B.

NO.	DESCRIPTION	BY	APP'D	DATE
	REVISION			

SPANISH FORK & MAPLETON WRF
SPANISH FORK CITY CORPORATION

10 - HEADWORKS
CONDUIT DEVELOPMENT - III

FILE : 55-20-124-10E-603
JUB PROJ. # : 55-20-124
DRAWN BY: KES
DESIGN BY: KES
CHECKED BY: SK

ONE INCH
AT FULL SIZE, IF NOT ONE INCH, SCALE ACCORDINGLY

LAST UPDATED: 7/6/2022

DRAWING:
10-E-603

SHEET: 616 OF 691

Plot Date:7/6/2022 5:12 PM Plotted By: Dadas, Telashree
Date Created:7/5/2022 C:\PW_WORKING\WTR\TDADAS\D020266\155-20-124-10E-603.DWG

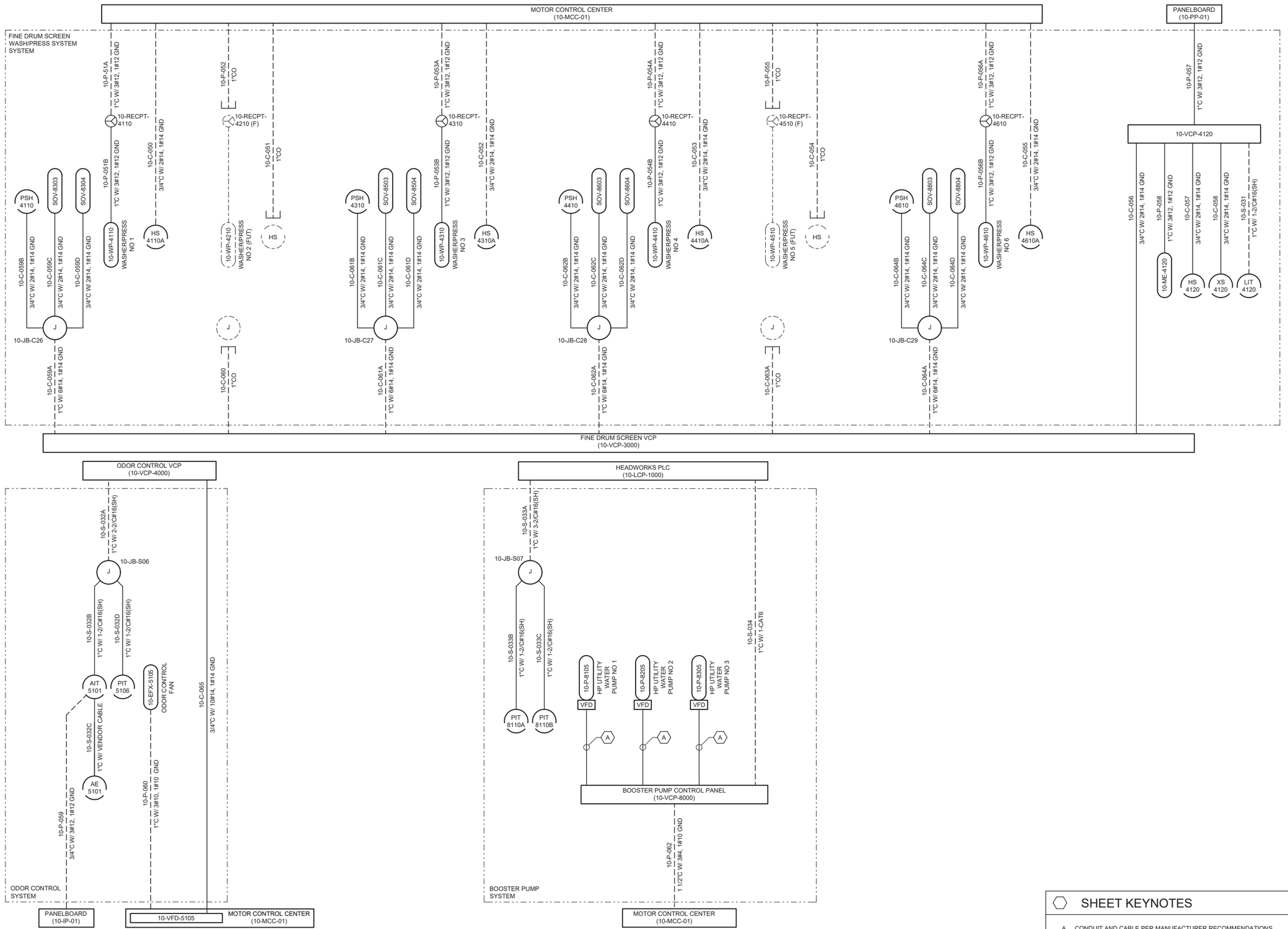

SHEET KEYNOTES

A. CONDUIT AND CABLE PER MANUFACTURER RECOMMENDATIONS

J-U-B ENGINEERS, INC.

J-U-B ENGINEERS, INC.
392 E. Winchester St., Suite 300
Salt Lake City, UT 84107
Phone: 801.547.0393
www.jub.com

Subconsultant:

Stantec

Stantec
2890 E Cottonwood Pkwy
Suite 300, Salt Lake City, Ut
84121
Tel: +1.801.617.3200
www.stantec.com

AGENCY

REVIEW

REUSE OF DRAWINGS
J-U-B SHALL RETAIN ALL COMMON LAW, STATUTORY, COPYRIGHT AND OTHER RESERVED RIGHTS OF THESE DRAWINGS, AND THE SAME SHALL NOT BE REUSED WITHOUT J-U-B'S PRIOR WRITTEN CONSENT. ANY REUSE WITHOUT WRITTEN CONSENT BY J-U-B WILL BE AT CLIENTS SOLE RISK AND WITHOUT LIABILITY OR LEGAL EXPOSURE TO J-U-B.

NO.	DESCRIPTION	BY	APP'L	DATE
	REVISION			

SPANISH FORK & MAPLETON WRF
SPANISH FORK CITY CORPORATION

10 - HEADWORKS
CONDUIT DEVELOPMENT - IV

FILE :	55-20-124-10E-604
JUB PROJ. # :	55-20-124
DRAWN BY:	KES
DESIGN BY:	KES
CHECKED BY:	SK

ONE INCH
AT FULL SIZE, IF NOT ONE INCH, SCALE ACCORDINGLY

LAST UPDATED: 7/6/2022

DRAWING:
10-E-604

SHEET: 617 OF 691

Plot Date:7/6/2022 5:12 PM Plotted By: Dadas, Tejashree
Date Created:7/5/2022 C:\PW_WORKING\WTR\TDADAS\D0202861\55-20-124-10E-604.DWG

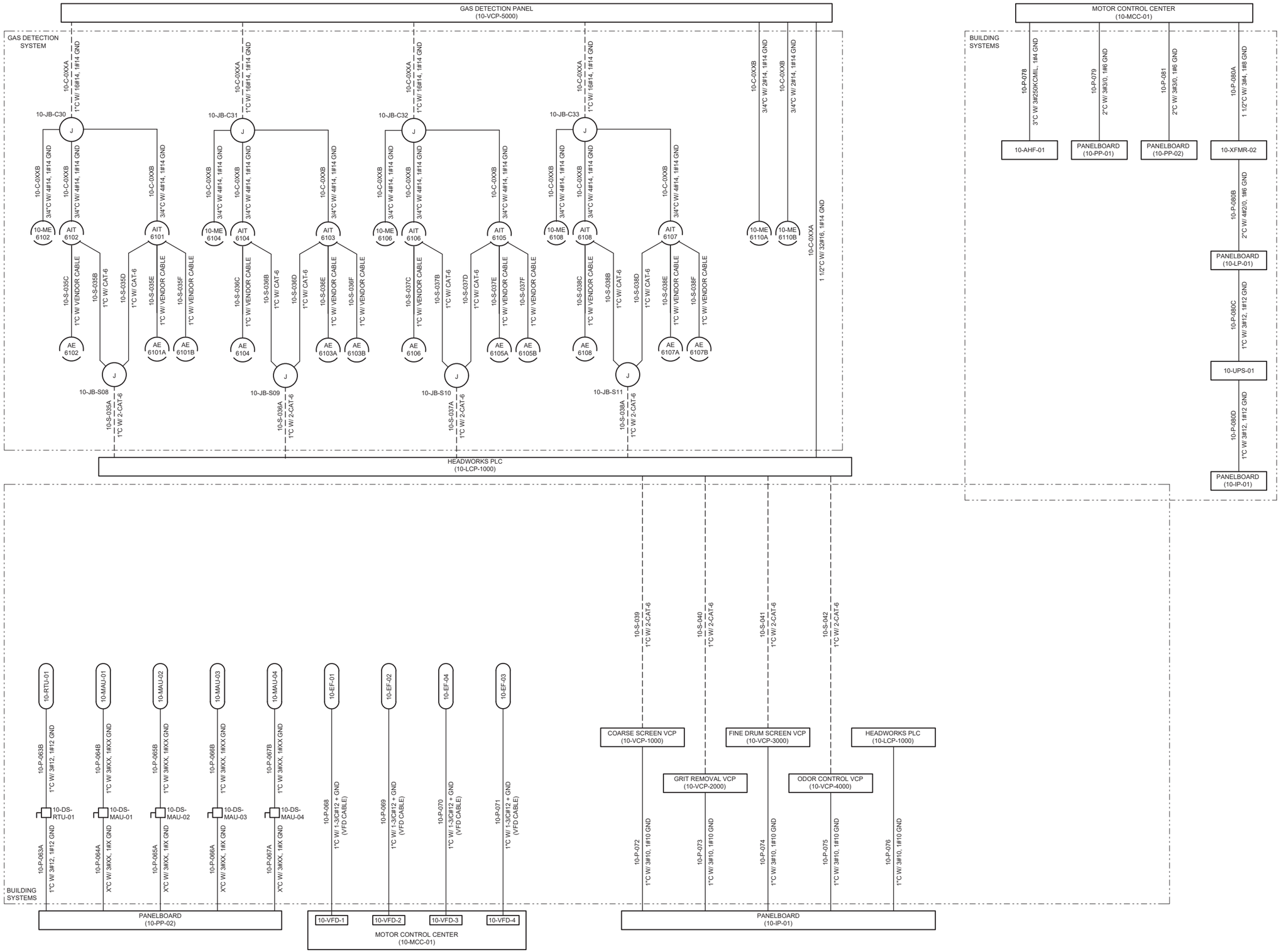

J-U-B ENGINEERS, INC.

J-U-B ENGINEERS, INC.
392 E. Winchester St., Suite 300
Salt Lake City, UT 84107
Phone: 801.547.0393
www.jub.com

Subconsultant:

Stantec

Stantec
2890 E Cottonwood Pkwy
Suite 300, Salt Lake City, Ut 84121
Tel: +1.801.617.3200
www.stantec.com

AGENCY

REVIEW

REUSE OF DRAWINGS
J-U-B SHALL RETAIN ALL COMMON LAW, STATUTORY, COPYRIGHT AND OTHER RESERVED RIGHTS OF THESE DRAWINGS, AND THE SAME SHALL NOT BE REUSED WITHOUT J-U-B'S PRIOR WRITTEN CONSENT. ANY REUSE WITHOUT WRITTEN CONSENT BY J-U-B WILL BE AT CLIENTS SOLE RISK AND WITHOUT LIABILITY OR LEGAL EXPOSURE TO J-U-B.

NO.	DESCRIPTION	BY	APR.	DATE
	REVISION			

SPANISH FORK & MAPLETON WRF
SPANISH FORK CITY CORPORATION

10 - HEADWORKS
CONDUIT DEVELOPMENT - V

FILE : 55-20-124-10E-605
JUB PROJ. # : 55-20-124
DRAWN BY: KES
DESIGN BY: KES
CHECKED BY: SK

ONE INCH
AT FULL SIZE. IF NOT ONE INCH, SCALE ACCORDINGLY

LAST UPDATED: 7/6/2022

DRAWING:
10-E-605

SHEET: 618 OF 691

Plot Date:7/6/2022 5:13 PM Plotted By: Dadas, Tejas!nee
Date Created:7/5/2022 C:\PW_WORKING\WTR\TD\DAS\D0202686\155-20-124-10E-605.DWG

PANELBOARD: 10-IP-01 | **BUS AMPS:** 125 | **VOLTS:** 208/120V
LOCATION: HW ELECTRICAL RM | **MAIN BKR AMPS:** 90 | **PHASE:** 3
MOUNTING: WALL | **WIRE:** 4

LOAD DESCRIPTION	KVA A	KVA B	KVA C	CKT CTO	BKR INT		BKR INT	CKT CTO	KVA A	KVA B	KVA C	LOAD DESCRIPTION
COARSE SCR VCP (10-VCP-1000)	1.9			1	30		20	2	2.0			HEADWORKS PLC (10-LCP-1000)
GRIT REMOVAL VCP (10-VCP-2000)		0.6		3	20		20	4		0.5		ODOR CONTROL VCP (10-VCP-4000)
FINE SCR VCP (10-VCP-3000)			1.9	5	20		20	6			0.1	10-FIT-4101
10-LIT-1103A	0.1			7	20		20	8	0.1			10-FIT-4301
10-LIT-1103B		0.1		9	20		20	10		0.1		10-FSL-8321
10-LIT-1203A			0.1	11	20		20	12			0.1	10-FIT-4401
10-LIT-1203B	0.1			13	20		20	14	0.1			10-FIT-4601
10-AE-1000		0.1		15	20		20	16		0.1		10-AIT-5101
10-AIT-1001			0.1	17	20		20	18			0.1	10-FIT-8110
10-FSL-8011	0.3			19	20		20	20	0.0			SPARE
SPARE		0.0		21	20		20	22		0.0		SPARE
SPARE			0.0	23	20		20	24			0.0	SPARE
SPACE	0.0			25	-		-	26	0.0			SPACE
SPACE		0.0		27	-		-	28		0.0		SPACE
SPACE			0.0	29	-		-	30			0.0	SPACE
SPACE	0.0			31	-		-	32	0.0			SPACE
SPACE		0.0		33	-		-	34		0.0		SPACE
SPACE			0.0	35	-		-	36			0.0	SPACE
SPACE	0.0			37	-		-	38	0.0			SPACE
SPACE		0.0		39	-		-	40		0.0		SPACE
SPACE			0.0	41	-		-	42			0.0	SPACE
	2.4	0.8	2.1	TOTAL					2.2	0.7	0.3	
	PHASE LOAD			TOTAL LOAD								
	4.6	1.5	2.4	8.5 KVA				23.6 AMPS				

PANELBOARD: 10-LP-01 | **BUS AMPS:** 200 | **VOLTS:** 208/120V
LOCATION: HW ELECTRICAL RM | **MAIN BKR AMPS:** 150 | **PHASE:** 3
MOUNTING: WALL | **WIRE:** 4

LOAD DESCRIPTION	KVA A	KVA B	KVA C	CKT CTO	BKR INT		BKR INT	CKT CTO	KVA A	KVA B	KVA C	LOAD DESCRIPTION
10-MOV-8102	0.3			1	20			2	3.33			10-UPS-01
10-MOV-2112		0.3		3	20		30/3P	4		3.33		
10-MOV-2212			0.3	5	20			6			1.44	DW PMP RM RCPTS
DW PMP RM LTS	1.17			7	20		20	8	1.62			COARSE SCRN RM RCPTS
COARSE SCRN RM LTS		1.46		9	20		20	10		1.44		FINE SCRN RM RCPTS
FINE SCRN RM LTS			2.33	11	20		20	12			0.36	CONT/ELEC RM RCPTS
CONT/ELEC RM LTS	0.49			13	20		20	14	0.72			WASHPRESS RM RCPTS
WASHPRESS RM LTS		1.51		15	20		20	16		0.0		EXTERIOR RCPTS
EXTERIOR LTS			0.24	17	20		20	18			0.18	HEAT TRACE RECEPTACLE 1
GATE LIGHTS	0.1			19	20		20	20	0.18			HEAT TRACE RECEPTACLE 2
COARSE SCRN RM 2 LTS		0.98		21	20		20	22		0.18		AUTO SAMPLER RECEPTACLE
GATE 1 CONTROLLER			0.5	23	20		20	24			0.3	IRRIGATION CONTROLLER
GATE 2 CONTROLLER	0.3			25	-		-	26	0.18			MAU-1 RECEPTACLE
GATE 3 CONTROLLER		0.3		27	-		-	28		0.18		MAU-2 RECEPTACLE
MAU-3 RECEPTACLE			0.18	29	-		-	30			0.18	MAU-4 RECEPTACLE
SPACE	-			31	-		-	32	0.0			SPACE
SPACE		-		33	-		-	34		0.0		SPACE
SPACE			-	35	-		-	36			0.0	SPACE
SPACE	-			37	-		-	38	0.0			SPACE
SPACE		-		39	-		-	40		0.0		SPACE
SPACE			-	41	-		-	42			0.0	SPACE
	2.36	4.55	3.55	TOTAL					6.03	5.13	2.46	
	PHASE LOAD			TOTAL LOAD								
	8.39	9.68	6.01	24.1 KVA				66.8 AMPS				

PANELBOARD: 10-PP-01 | **BUS AMPS:** 200 | **VOLTS:** 480 V
LOCATION: HW ELECTRICAL RM | **MAIN BKR AMPS:** 150 | **PHASE:** 3
MOUNTING: WALL | **WIRE:** 3

LOAD DESCRIPTION	KVA A	KVA B	KVA C	CKT CTO	BKR INT		BKR INT	CKT CTO	KVA A	KVA B	KVA C	LOAD DESCRIPTION
10-MOV-1110	0.5			1	20/3P		20/3P	2	0.5			10-MOV-2106
		0.5		3				4		0.5		
			0.5	5				6			0.5	
10-MOV-1120	0.5			7	20/3P		20/3P	8	0.5			10-MOV-2206
		0.5		9				10		0.5		
			0.5	11				12			0.5	
10-LCV-4101	0.5			13	20/3P		20/3P	14	0.0			10-LCV-4201 (FUT)
		0.5		15				16		0.0		
			0.5	17				18			0.0	
10-LCV-4301	0.5			19	20/3P		20/3P	20	0.0			10-LCV-4501 (FUT)
		0.5		21				22		0.0		
			0.5	23				24			0.0	
10-LCV-4401	0.5			25	20/3P		20/3P	26	0.0			SPARE
		0.5		27				28		0.0		
			0.5	29				30			0.0	
10-LCV-4601	0.5			31	20/3P		20/3P	32	0.0			SPARE
		0.5		33				34		0.0		
			0.5	35				36			0.0	
SPARE	0.0			37	20/3P		20/3P	38	0.0			SPARE
		0.0		39				40		0.0		
			0.0	41				42			0.0	
	3.0	3.0	3.0	TOTAL					1.0	1.0	1.0	
	PHASE LOAD			TOTAL LOAD								
	4.0	4.0	4.0	12.0 KVA				33.3 AMPS				

PANELBOARD: 10-PP-02 | **BUS AMPS:** 200 | **VOLTS:** 480 V
LOCATION: HW ELECTRICAL RM | **MAIN BKR AMPS:** 150 | **PHASE:** 3
MOUNTING: WALL | **WIRE:** 3

LOAD DESCRIPTION	KVA A	KVA B	KVA C	CKT CTO	BKR INT		BKR INT	CKT CTO	KVA A	KVA B	KVA C	LOAD DESCRIPTION
10-RTU-01	4.2			1	20/3P		20/3P	2	0.0			SPARE
		4.2		3				4		0.0		
			4.2	5				6			0.0	
10-MAU-01	2.1			7	20/3P		20/3P	8	0.0			SPARE
		2.1		9				10		0.0		
			2.1	11				12			0.0	
10-MAU-02	2.1			13	20/3P		20/3P	14	0.0			SPARE
		2.1		15				16		0.0		
			2.1	17				18			0.0	
10-MAU-03	2.1			19	20/3P		20/3P	20	0.0			SPARE
		2.1		21				22		0.0		
			2.1	23				24			0.0	
10-MAU-04	2.1			25	20/3P		20/3P	26	0.0			SPARE
		2.1		27				28		0.0		
			2.1	29				30			0.0	
SPARE	0.0			31	20/3P		20/3P	32	0.0			SPARE
		0.0		33				34		0.0		
			0.0	35				36			0.0	
SPARE	0.0			37	20/3P		20/3P	38	0.0			SPARE
		0.0		39				40		0.0		
			0.0	41				42			0.0	
	12.6	12.6	12.6	TOTAL					0.0	0.0	0.0	
	PHASE LOAD			TOTAL LOAD								
	12.6	12.6	12.6	37.8 KVA				104.9 AMPS				

J-U-B ENGINEERS, INC.
J-U-B ENGINEERS, INC.
392. E. Winchester St., Suite 300
Salt Lake City, UT 84107
Phone: 801.547.0393
www.jub.com

Subconsultant:
Stantec
Stantec
2890 E Cottonwood Pkwy
Suite 300, Salt Lake City, Ut
84121
Tel: +1.801.617.3200
www.stantec.com

AGENCY

REVIEW

REUSE OF DRAWINGS
J-U-B SHALL RETAIN ALL COMMON LAW STATUTORY, COPYRIGHT AND OTHER RESERVED RIGHTS OF THESE DRAWINGS, AND THE SAME SHALL NOT BE REUSED WITHOUT J-U-B'S PRIOR WRITTEN CONSENT. ANY REUSE WITHOUT WRITTEN CONSENT BY J-U-B WILL BE AT CLIENTS SOLE RISK AND WITHOUT LIABILITY OR LEGAL EXPOSURE TO J-U-B.

NO.	DESCRIPTION	BY	APP'L	DATE
REVISION				

SPANISH FORK & MAPLETON WRF
SPANISH FORK CITY CORPORATION

10 - HEADWORKS
PANEL SCHEDULES

FILE : 55-20-124-10E-610
JUB PROJ. # : 55-20-124
DRAWN BY: KES
DESIGN BY: KES
CHECKED BY: SK

ONE INCH
AT FULL SIZE, IF NOT ONE INCH, SCALE ACCORDINGLY

LAST UPDATED: 7/6/2022

DRAWING:
10-E-610

SHEET: 619 OF 691

Plot Date:7/6/2022 5:14 PM Plotted By: Dadas, Tejae.hne
Date Created:7/5/2022 C:\PW_WORKING\WTR\TDADAS\D0020286\155-20-124-10E-610.DWG

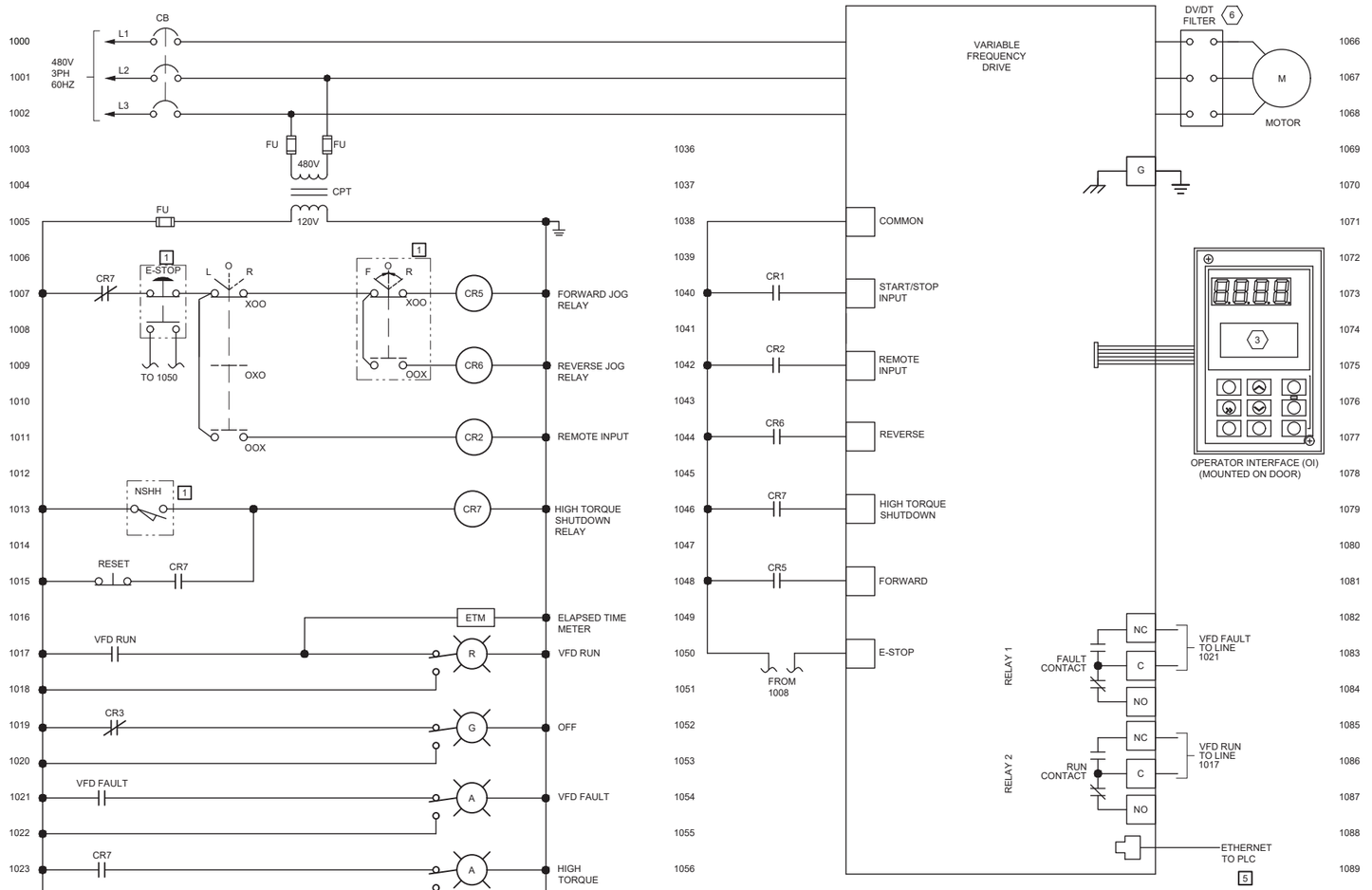

TYPICAL FOR 10-SCR-1203
(ALL ITEMS LOCATED AT VFD UNLESS OTHERWISE NOTED)

LOCATION LEGEND	
1	FIELD
2	LCS
3	LCP
4	MCC
5	PLC
6	VFD

SHEET KEYNOTES	
3	FOR VFD DIGITAL OPERATOR INTERFACE REFER TO P&ID'S.
6	PROVIDE FILTERS IF RECOMMENDED BY VFD MANUFACTURER. FILTER TO BE LOCATED INSIDE VFD ENCLOSURE.

J-U-B ENGINEERS, INC.

J-U-B ENGINEERS, INC.
392. E. Winchester St., Suite 300
Salt Lake City, UT 84107
Phone: 801.547.0393
www.jub.com

Subconsultant:

Stantec
Stantec
2890 E Cottonwood Pkwy
Suite 300, Salt Lake City, Ut 84121
Tel: +1.801.617.3200
www.stantec.com

AGENCY

REVIEW

REUSE OF DRAWINGS
J-U-B SHALL RETAIN ALL COMMON LAW STATUTORY, COPYRIGHT AND OTHER RESERVED RIGHTS OF THESE DRAWINGS, AND THE SAME SHALL NOT BE REUSED WITHOUT J-U-B'S PRIOR WRITTEN CONSENT. ANY REUSE WITHOUT WRITTEN CONSENT BY J-U-B WILL BE AT CLIENTS SOLE RISK AND WITHOUT LIABILITY OR LEGAL EXPOSURE TO J-U-B.

NO.	DESCRIPTION	BY	APR.	DATE
	REVISION			

SPANISH FORK & MAPLETON WRF
SPANISH FORK CITY CORPORATION

10 - HEADWORKS
CONTROL SCHEMATICS - I

FILE : 55-20-124-10E-611
JUB PROJ. # : 55-20-124
DRAWN BY: KES
DESIGN BY: KES
CHECKED BY: SK
ONE INCH
AT FULL SIZE, IF NOT ONE INCH, SCALE ACCORDINGLY
LAST UPDATED: 7/6/2022

DRAWING:
10-E-611
SHEET: 620 OF 691

Plot Date:7/6/2022 5:15 PM Plotted By: Dadas, Tejasbhee
Date Created:7/5/2022 C:\PW_WORKINGWTRITDADAS\D0202626\155-20-124-10E-611.DWG

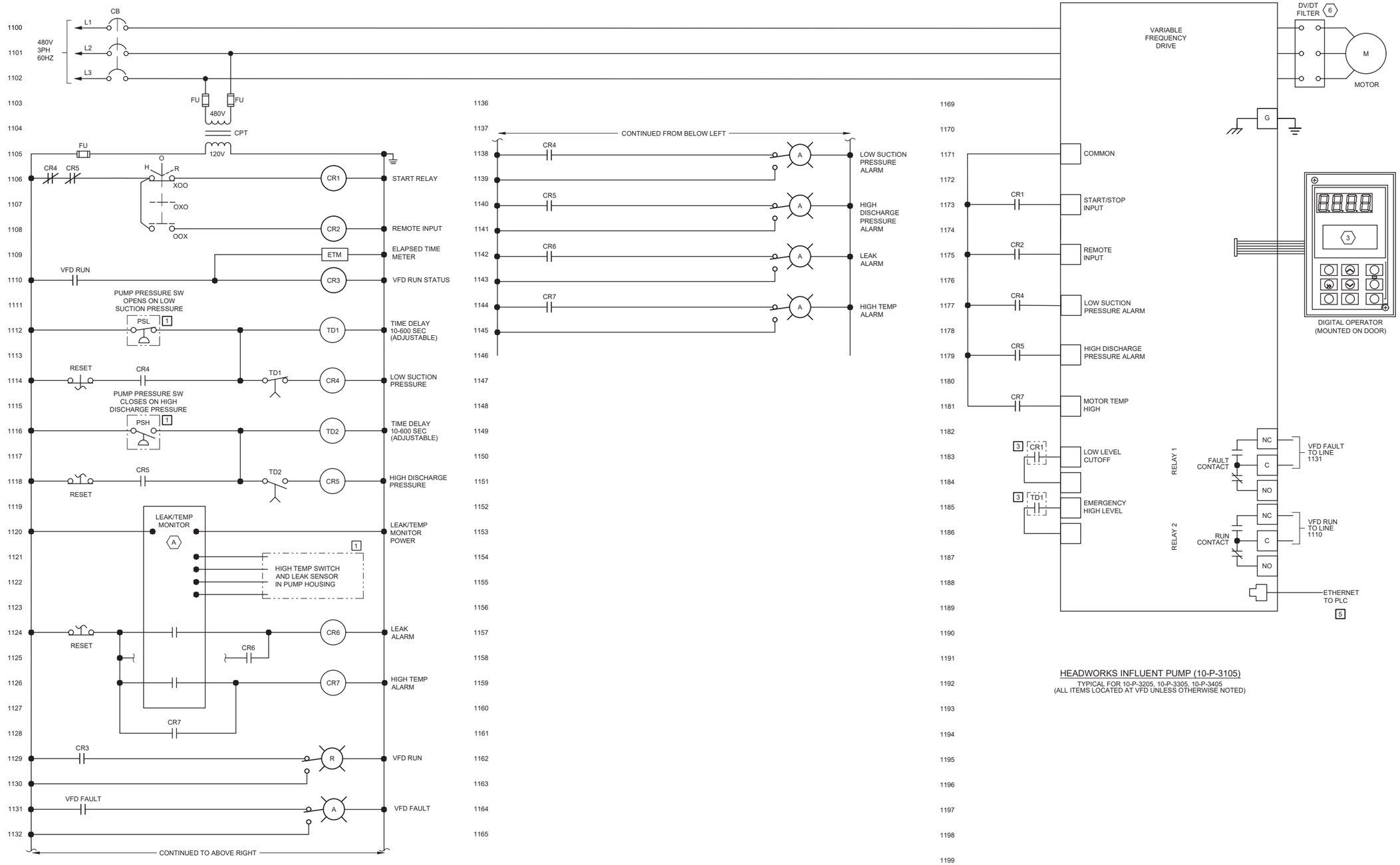

HEADWORKS INFLUENT PUMP (10-P-3105)

TYPICAL FOR 10-P-3205, 10-P-3305, 10-P-3405
(ALL ITEMS LOCATED AT VFD UNLESS OTHERWISE NOTED)

LOCATION LEGEND	
1	FIELD
2	LCS
3	LCP
4	MCC
5	PLC
6	VFD

SHEET KEYNOTES

3	FOR VFD DIGITAL OPERATOR INTERFACE REFER TO P&ID'S.
6	PROVIDE FILTERS IF RECOMMENDED BY VFD MANUFACTURER. FILTER TO BE LOCATED INSIDE VFD ENCLOSURE.

REUSE OF DRAWINGS
J-U-B SHALL RETAIN ALL COMMON LAW STATUTORY, COPYRIGHT AND OTHER RESERVED RIGHTS OF THESE DRAWINGS, AND THE SAME SHALL NOT BE REUSED WITHOUT J-U-B'S PRIOR WRITTEN CONSENT. ANY REUSE WITHOUT WRITTEN CONSENT BY J-U-B WILL BE AT CLIENTS SOLE RISK AND WITHOUT LIABILITY OR LEGAL EXPOSURE TO J-U-B.

NO.	DESCRIPTION	BY	APR.	DATE
	REVISION			

J-U-B ENGINEERS, INC.
J-U-B ENGINEERS, INC.
392 E. Winchester St., Suite 300
Salt Lake City, UT 84107
Phone: 801.547.0393
www.jub.com

Subconsultant:
Stantec
Stantec
2890 E Cottonwood Pkwy
Suite 300, Salt Lake City, Ut 84121
Tel: +1.801.617.3200
www.stantec.com

AGENCY

REVIEW

SPANISH FORK & MAPLETON WRF
SPANISH FORK CITY CORPORATION

10 - HEADWORKS
CONTROL SCHEMATICS - II

FILE :	55-20-124-10E-612
JUB PROJ. # :	55-20-124
DRAWN BY:	KES
DESIGN BY:	KES
CHECKED BY:	SK

ONE INCH
AT FULL SIZE, IF NOT ONE INCH, SCALE ACCORDINGLY

LAST UPDATED: 7/6/2022

DRAWING:
10-E-612

SHEET: 621 OF 691

Plot Date:7/6/2022 5:19 PM Plotted By: Datas, Tejashree
Date Created:7/6/2022 C:\PW_WORKING\WTR\TDATA\SD0202661\55-20-124-10E-612.DWG

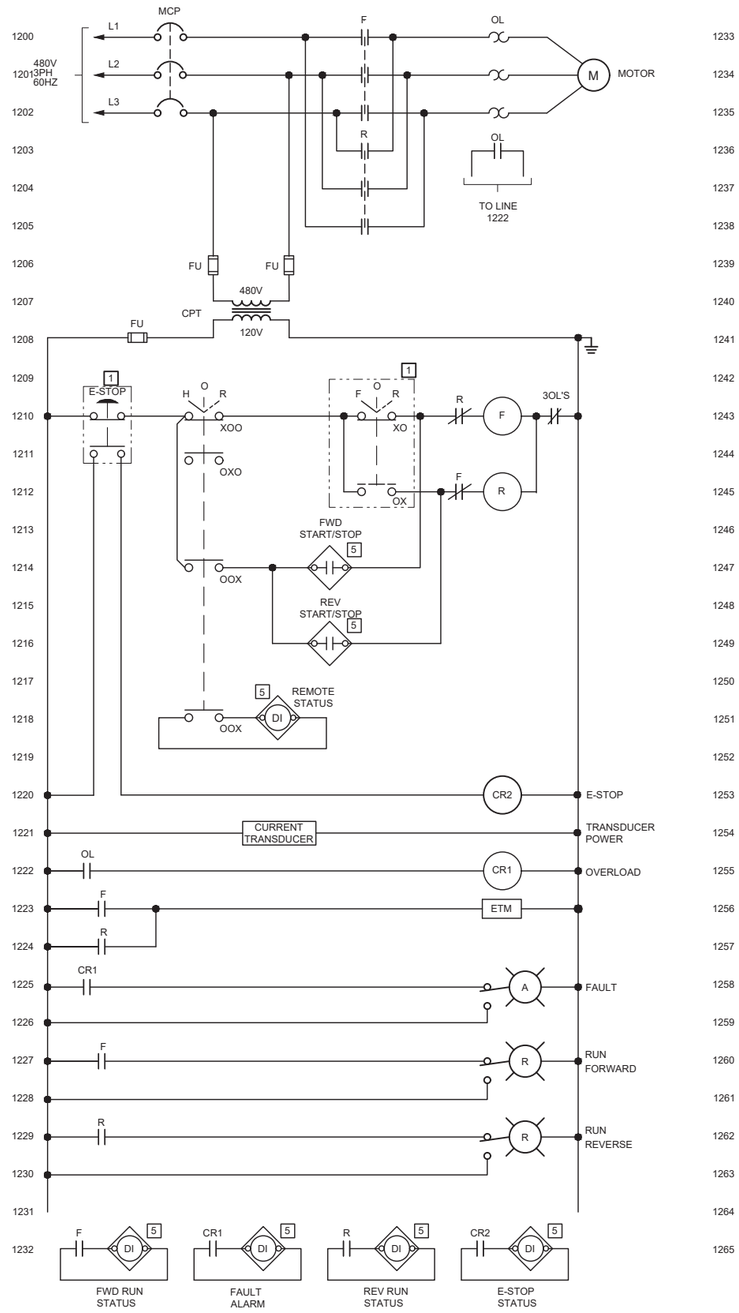

COARSE SCREENING WASHER/PRESS (10-WP-1111)

TYPICAL FOR 10-WP-1121
(ALL ITEMS LOCATED AT MCC UNLESS OTHERWISE NOTED)

LOCATION LEGEND	
1	FIELD
2	LCS
3	LCP
4	MCC
5	PLC
6	VFD

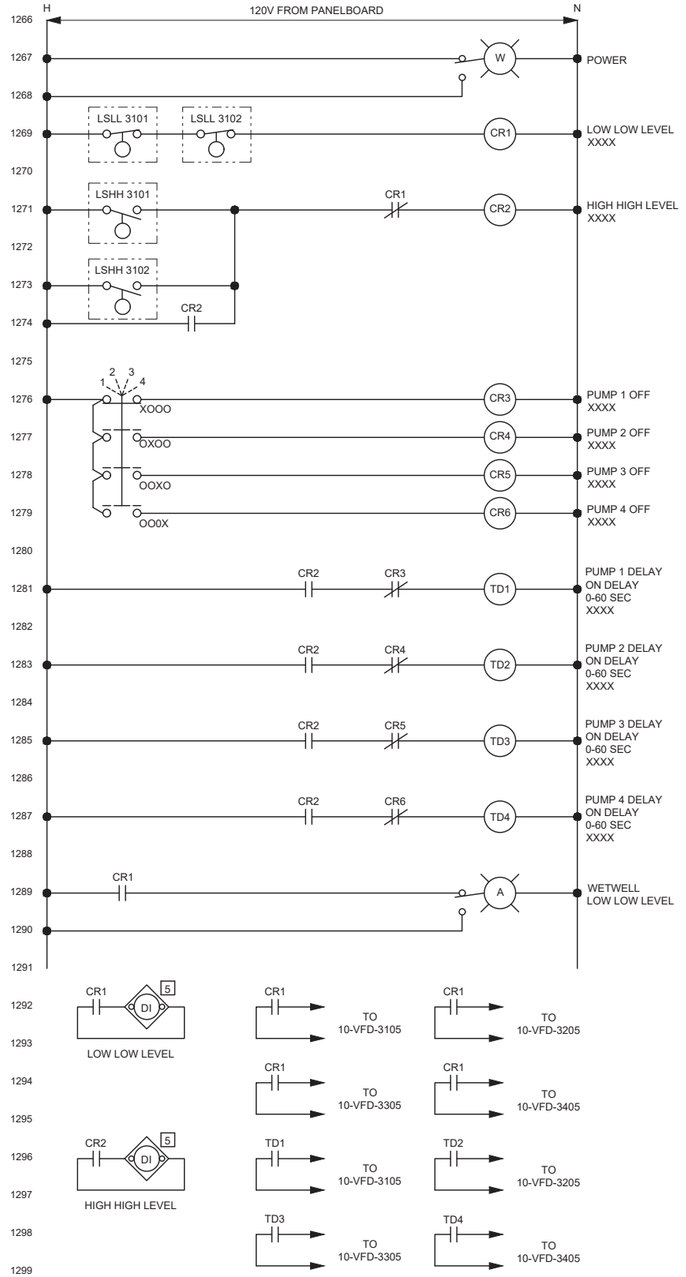

EMERGENCY PUMP CONTROL PANEL (10-LCP-3100)

(ALL ITEMS AT LCP UNLESS INDICATED OTHERWISE)

J-U-B ENGINEERS, INC.

J-U-B ENGINEERS, INC.
392 E. Winchester St., Suite 300
Salt Lake City, UT 84107
Phone: 801.547.0393
www.jub.com

Subconsultant:

Stantec
Stantec
2890 E Cottonwood Pkwy
Suite 300, Salt Lake City, Ut 84121
Tel: +1.801.617.3200
www.stantec.com

AGENCY

REVIEW

REUSE OF DRAWINGS
J-U-B SHALL RETAIN ALL COMMON LAW STATUTORY, COPYRIGHT AND OTHER RESERVED RIGHTS OF THESE DRAWINGS, AND THE SAME SHALL NOT BE REUSED WITHOUT J-U-B'S PRIOR WRITTEN CONSENT. ANY REUSE WITHOUT WRITTEN CONSENT BY J-U-B WILL BE AT CLIENTS SOLE RISK AND WITHOUT LIABILITY OR LEGAL EXPOSURE TO J-U-B.

NO.	DESCRIPTION	BY	APP'L	DATE
	REVISION			

SPANISH FORK & MAPLETON WRF
SPANISH FORK CITY CORPORATION

10 - HEADWORKS
CONTROL SCHEMATICS - III

FILE : 55-20-124-10E-613
JUB PROJ. # : 55-20-124
DRAWN BY: KES
DESIGN BY: KES
CHECKED BY: SK
ONE INCH
AT FULL SIZE, IF NOT ONE INCH, SCALE ACCORDINGLY
LAST UPDATED: 7/6/2022

DRAWING:
10-E-613

SHEET: 622 OF 691

Plot Date:7/6/2022 5:16 PM Plotted By: Datas, Tejashree
Date Created:7/5/2022 C:\PW_WORKING\WTR\TD\ADAS\D0202686\155-20-124-10E-613.DWG

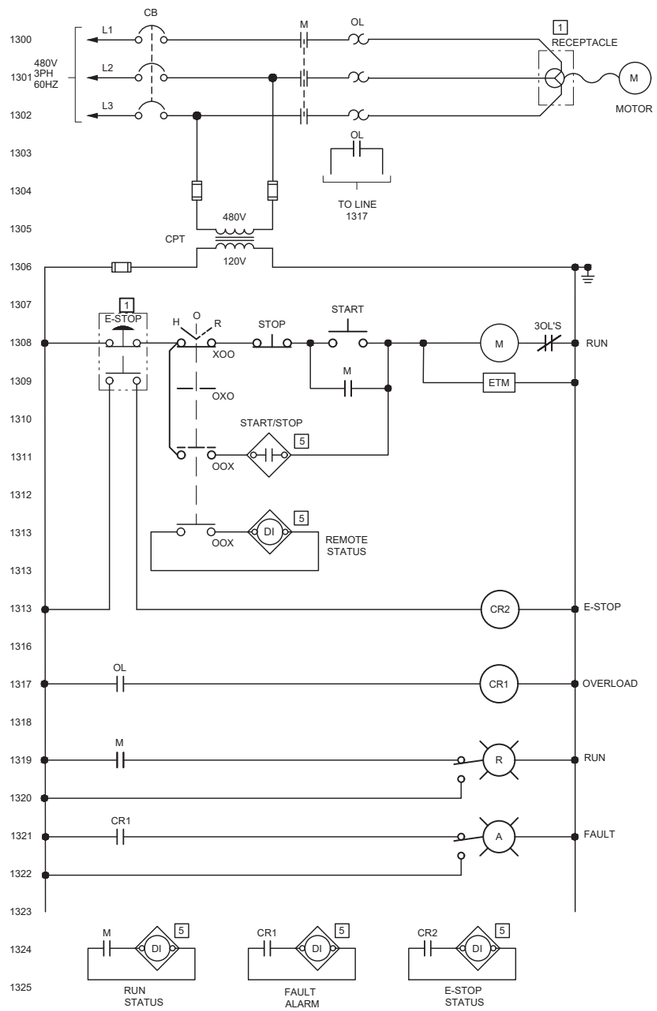

GRIT MIXER NO 1 (10-MXR-2102)

TYPICAL FOR 10-MXR-2202
(ALL ITEMS LOCATED AT MCC UNLESS OTHERWISE NOTED)

FINE SCREEN WASH/PRESS NO 1 (10-WP-4110)

TYPICAL FOR 10-WP-4210, 10-WP-4310, 10-WP-4410, 10-WP-4510, 10-WP-4610
(ALL ITEMS LOCATED AT MCC UNLESS OTHERWISE NOTED)

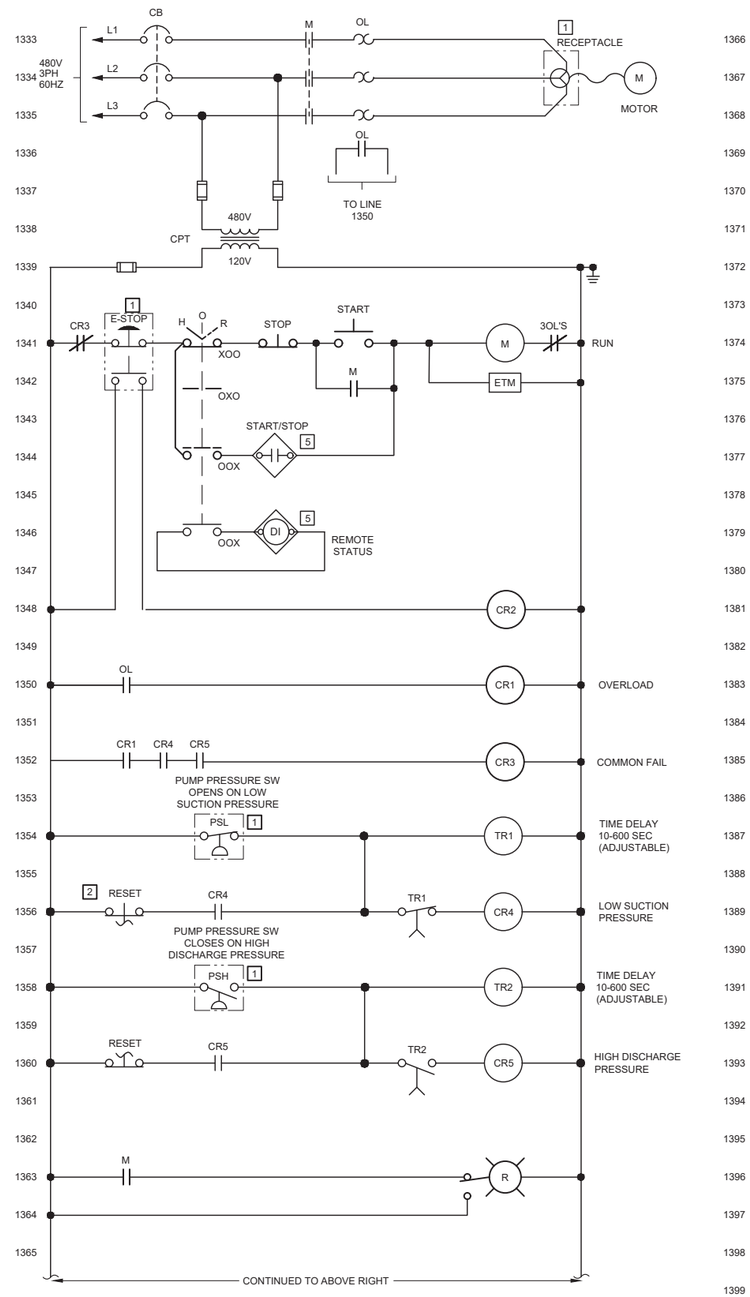

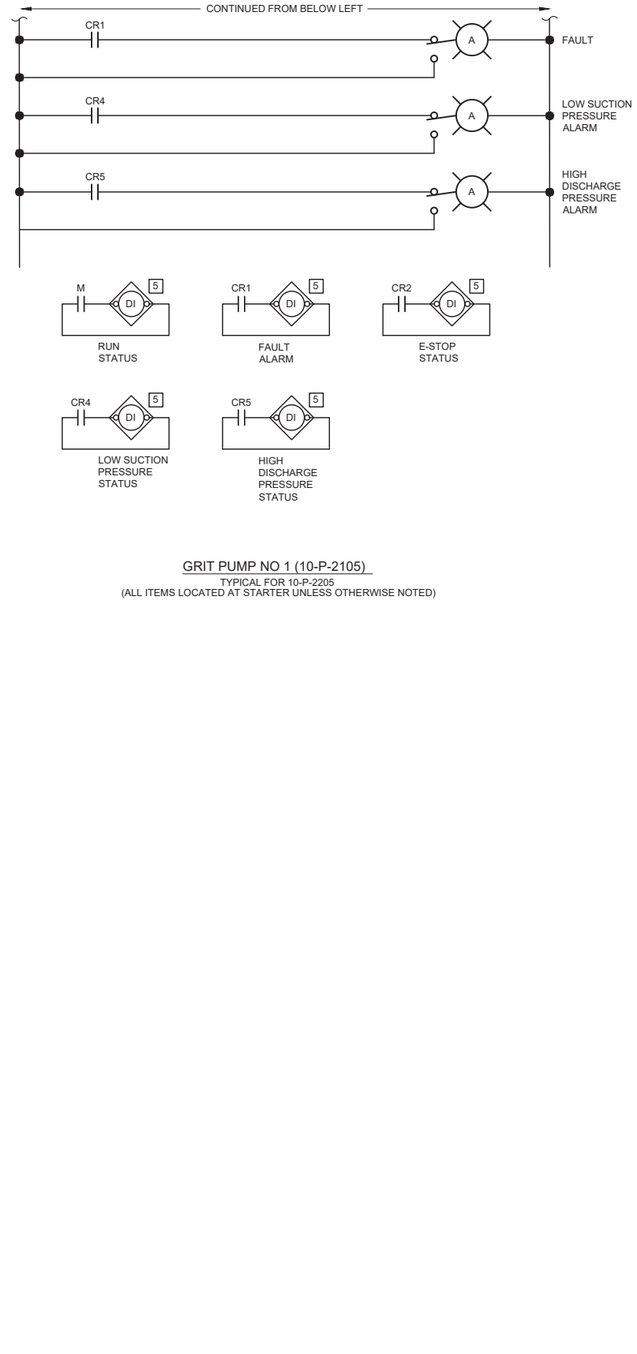

GRIT PUMP NO 1 (10-P-2105)

TYPICAL FOR 10-P-2205
(ALL ITEMS LOCATED AT STARTER UNLESS OTHERWISE NOTED)

LOCATION LEGEND

1	FIELD
2	LCS
3	LCP
4	MCC
5	PLC
6	VFD

Plot Date:7/6/2022 5:18 PM Plotted By: Dadas, Telashree
Date Created:7/5/2022 C:\PW_WORKING\WTR\TDADAS\D020266\155-20-124-10E-614.DWG

J-U-B ENGINEERS, INC.
J-U-B ENGINEERS, INC.
392 E. Winchester St., Suite 300
Salt Lake City, UT 84107
Phone: 801.547.0393
www.jub.com

Subconsultant:
Stantec
Stantec
2890 E Cottonwood Pkwy
Suite 300, Salt Lake City, Ut 84121
Tel: +1.801.617.3200
www.stantec.com

AGENCY

REVIEW

REUSE OF DRAWINGS
J-U-B SHALL RETAIN ALL COMMON LAW, STATUTORY, COPYRIGHT AND OTHER RESERVED RIGHTS OF THESE DRAWINGS, AND THE SAME SHALL NOT BE REUSED WITHOUT J-U-B'S PRIOR WRITTEN CONSENT. ANY REUSE WITHOUT WRITTEN CONSENT BY J-U-B WILL BE AT CLIENTS SOLE RISK AND WITHOUT LIABILITY OR LEGAL EXPOSURE TO J-U-B.

NO.	DESCRIPTION	BY	APP'D	DATE
	REVISION			

SPANISH FORK & MAPLETON WRF
SPANISH FORK CITY CORPORATION

10 - HEADWORKS
CONTROL SCHEMATICS - IV

FILE : 55-20-124-10E-614
JUB PROJ. # : 55-20-124
DRAWN BY: KES
DESIGN BY: KES
CHECKED BY: SK
ONE INCH
AT FULL SIZE, IF NOT ONE INCH, SCALE ACCORDINGLY
LAST UPDATED: 7/6/2022

DRAWING:
10-E-614

SHEET: 623 OF 691

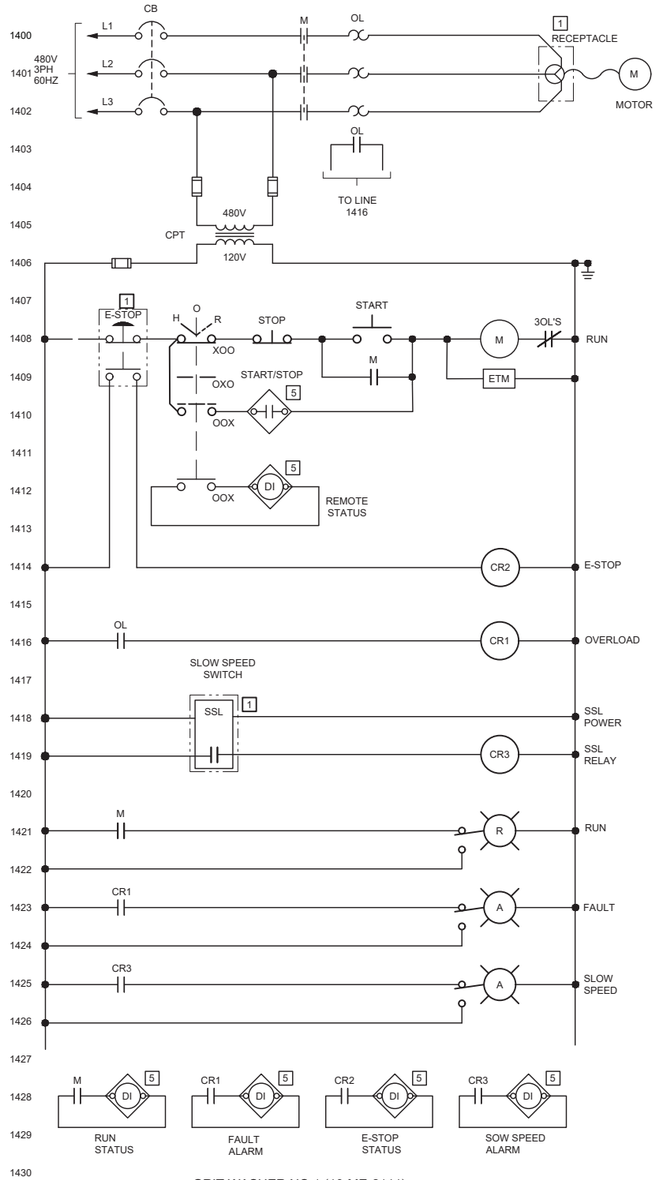

GRIT WASHER NO 1 (10-ME-2111)

TYPICAL FOR 10-ME-2211

(ALL ITEMS LOCATED AT STARTER UNLESS OTHERWISE NOTED)

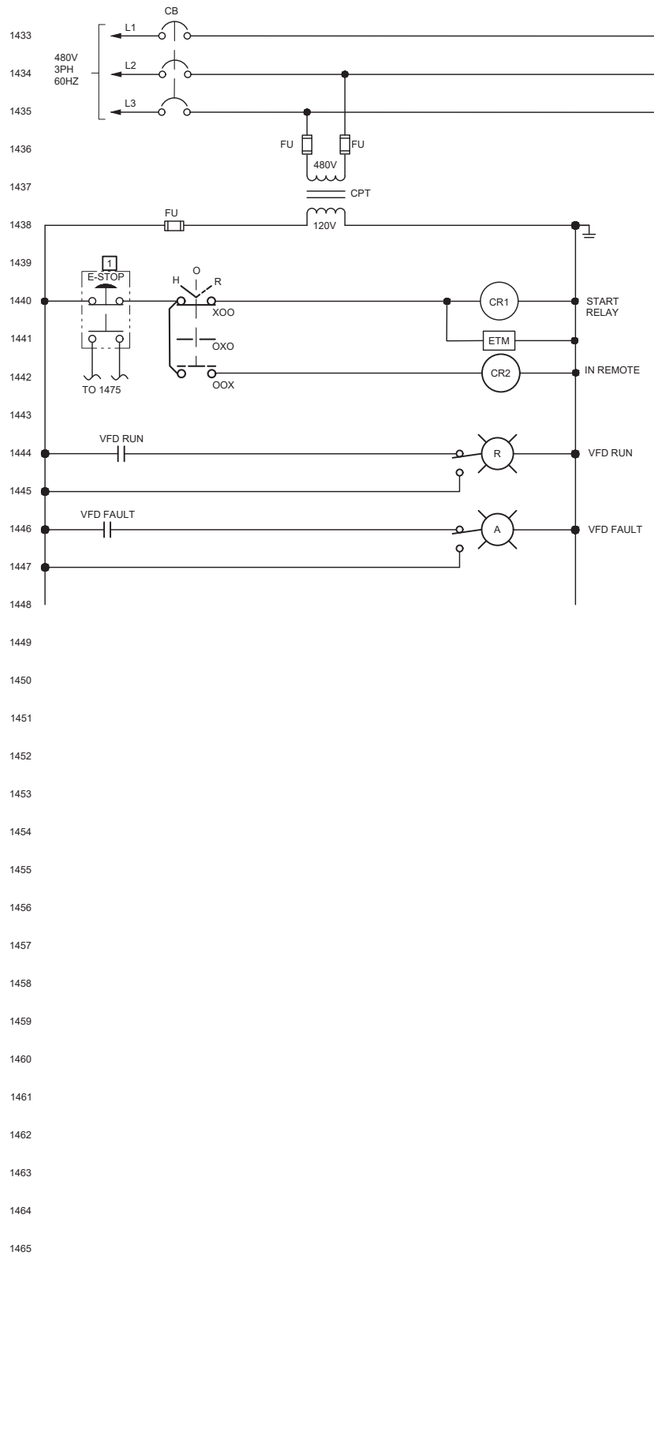

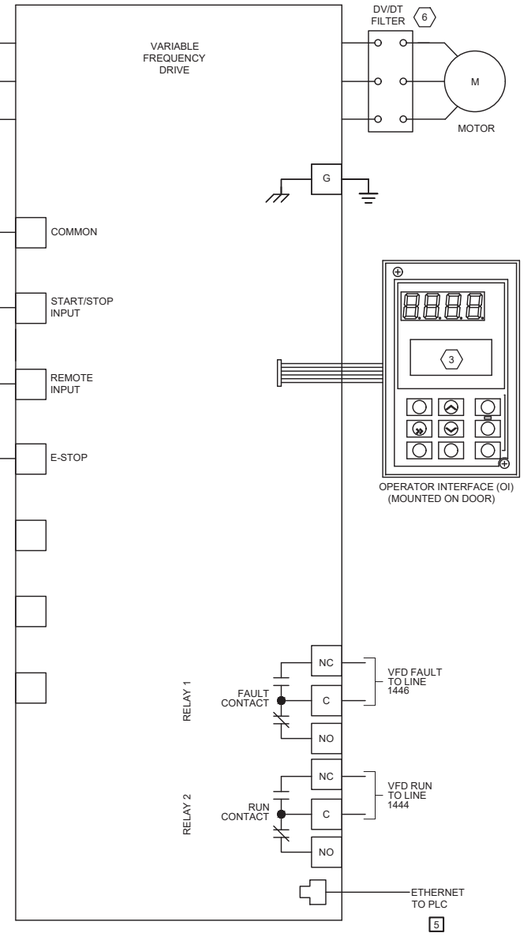

ODOR CONTROL EXHAUST FAN NO 1 (10-EXF-5105)

(ALL ITEMS LOCATED AT VFD UNLESS OTHERWISE NOTED)

LOCATION LEGEND	
1	FIELD
2	LCS
3	LCP
4	MCC
5	PLC
6	VFD

SHEET KEYNOTES

3	FOR VFD DIGITAL OPERATOR INTERFACE REFER TO P&ID'S.
6	PROVIDE FILTERS IF RECOMMENDED BY VFD MANUFACTURER. FILTER TO BE LOCATED INSIDE VFD ENCLOSURE.

REUSE OF DRAWINGS
J-U-B SHALL RETAIN ALL COMMON LAW STATUTORY, COPYRIGHT AND OTHER RESERVED RIGHTS OF THESE DRAWINGS, AND THE SAME SHALL NOT BE REUSED WITHOUT J-U-B'S PRIOR WRITTEN CONSENT. ANY REUSE WITHOUT WRITTEN CONSENT BY J-U-B WILL BE AT CLIENTS SOLE RISK AND WITHOUT LIABILITY OR LEGAL EXPOSURE TO J-U-B.

NO.	DESCRIPTION	BY	APP'L	DATE
	REVISION			

J-U-B ENGINEERS, INC.
J-U-B ENGINEERS, INC.
392 E. Winchester St., Suite 300
Salt Lake City, UT 84107
Phone: 801.547.0393
www.jub.com

Subconsultant:
Stantec
Stantec
2890 E Cottonwood Pkwy
Suite 300, Salt Lake City, Ut 84121
Tel: +1.801.617.3200
www.stantec.com

AGENCY

REVIEW

SPANISH FORK & MAPLETON WRF
SPANISH FORK CITY CORPORATION

10 - HEADWORKS
CONTROL SCHEMATICS - V

FILE : 55-20-124-10E-615
JUB PROJ. # : 55-20-124
DRAWN BY: KES
DESIGN BY: KES
CHECKED BY: SK

ONE INCH
AT FULL SIZE, IF NOT ONE INCH, SCALE ACCORDINGLY

LAST UPDATED: 7/6/2022

DRAWING:
10-E-615

SHEET: 624 OF 691

Plot Date:7/9/2022 5:17 PM Plotted By: Dadas, Teiashree
Date Created:7/5/2022 C:\PW_WORKING\WITH\TDADAS\D0202861\55-20-124-10E-615.DWG

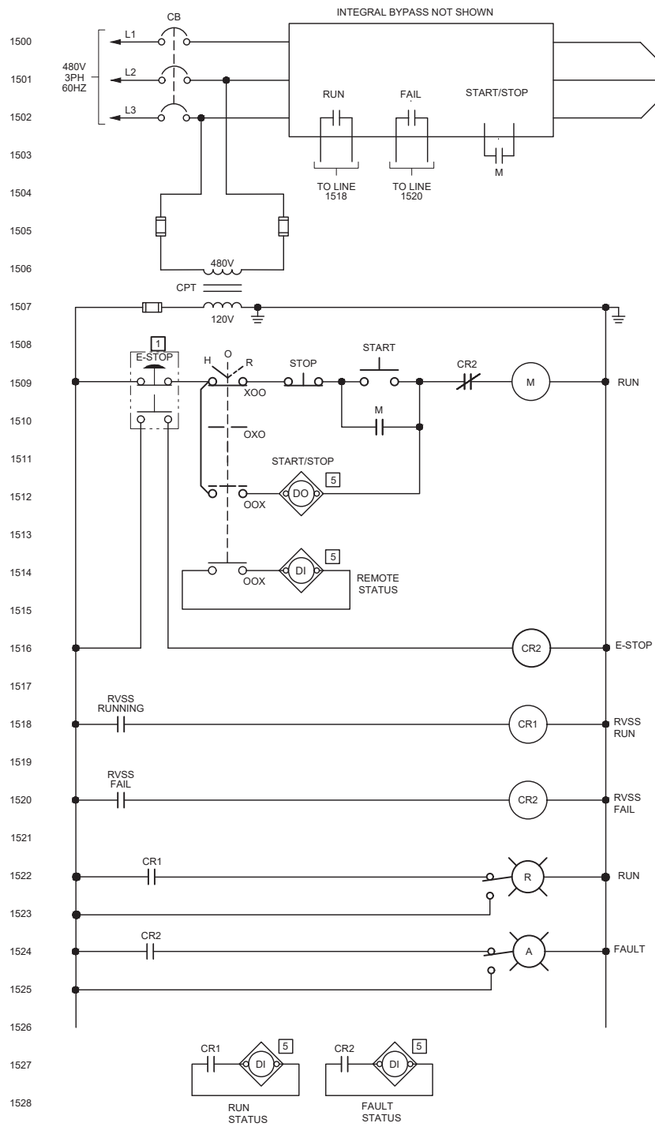

FINE SCREEN NO 1 (10-SCR-4105)

TYPICAL FOR 10-SCR-4205, 10-SCR-4305, 10-SCR-4405, 10-SCR-4505, 10-SCR-4605
(ALL ITEMS LOCATED AT MCC UNLESS OTHERWISE NOTED)

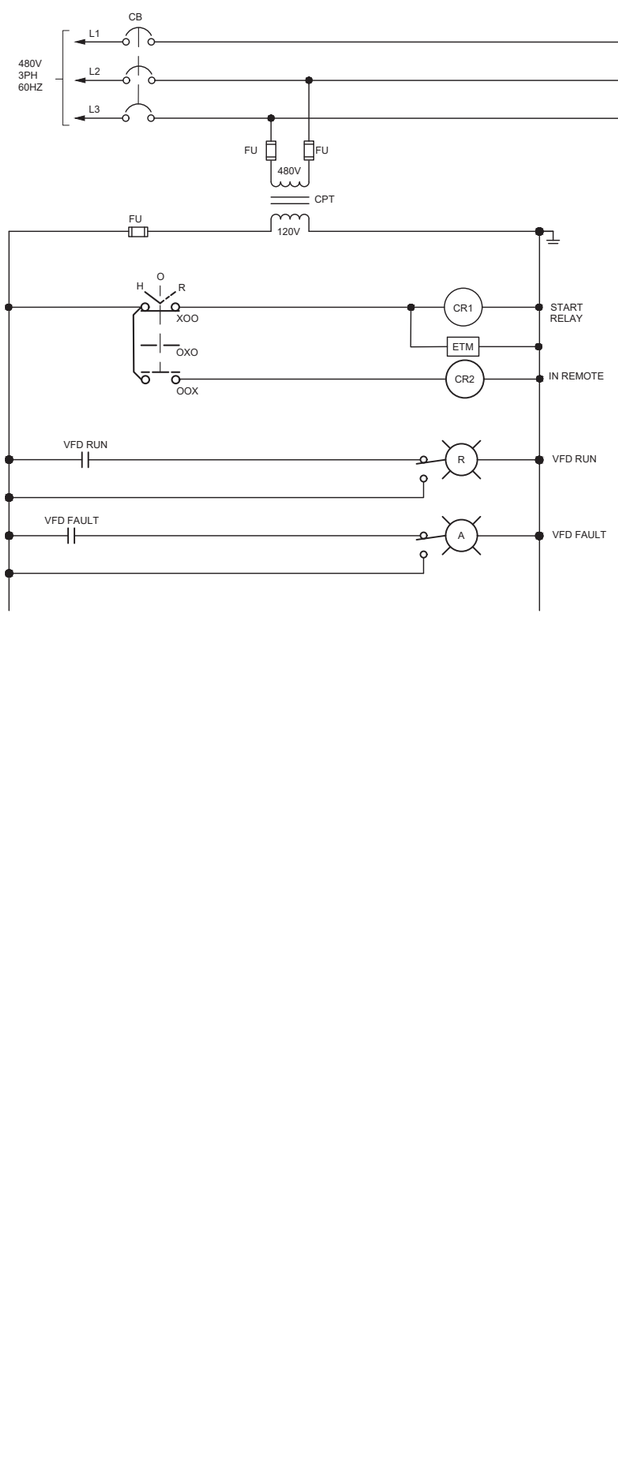

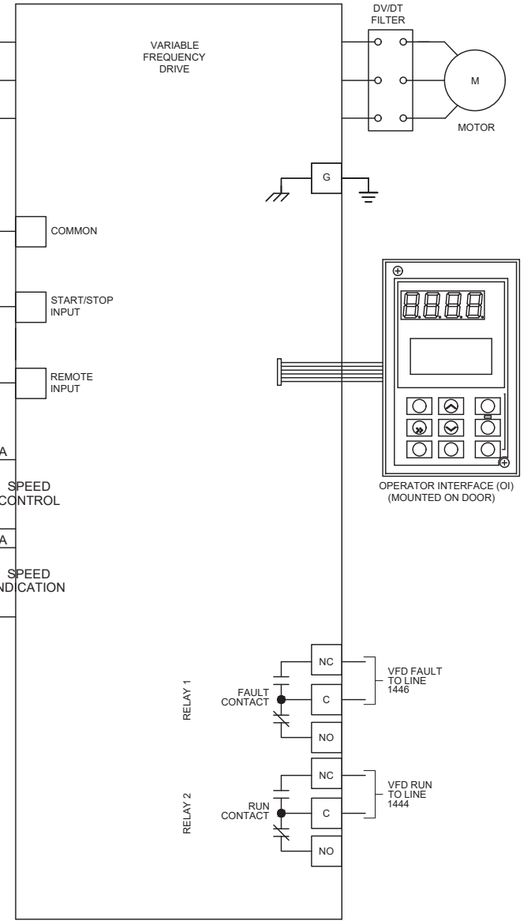

EXHAUST FAN (10-EF-1)

TYPICAL FOR 10-EF-2, 10-EF-3 AND 10-EF-4
(ALL ITEMS LOCATED AT VFD UNLESS OTHERWISE NOTED)

LOCATION LEGEND	
1	FIELD
2	LCS
3	LCP
4	MCC
5	PLC
6	VFD

REUSE OF DRAWINGS

J-U-B SHALL RETAIN ALL COMMON LAW, STATUTORY, COPYRIGHT AND OTHER RESERVED RIGHTS OF THESE DRAWINGS, AND THE SAME SHALL NOT BE REUSED WITHOUT J-U-B'S PRIOR WRITTEN CONSENT. ANY REUSE WITHOUT WRITTEN CONSENT BY J-U-B WILL BE AT CLIENTS SOLE RISK AND WITHOUT LIABILITY OR LEGAL EXPOSURE TO J-U-B.

NO.	DESCRIPTION	BY	APP.	DATE
	REVISION			

J-U-B ENGINEERS, INC.

J-U-B ENGINEERS, INC.
392 E. Winchester St., Suite 300
Salt Lake City, UT 84107
Phone: 801.547.0393
www.jub.com

Subconsultant:

Stantec
2890 E Cottonwood Pkwy
Suite 300, Salt Lake City, Ut
84121
Tel: +1.801.617.3200
www.stantec.com

AGENCY

REVIEW

SPANISH FORK & MAPLETON WRF
SPANISH FORK CITY CORPORATION

10 - HEADWORKS
CONTROL SCHEMATICS - VI

FILE :	55-20-124-10E-616
JUB PROJ. # :	55-20-124
DRAWN BY:	KES
DESIGN BY:	KES
CHECKED BY:	SK
ONE INCH	AT FULL SIZE, IF NOT ONE INCH, SCALE ACCORDINGLY
LAST UPDATED:	7/6/2022

DRAWING:
10-E-616

SHEET: 625 OF 691

Plot Date:7/6/2022 5:17 PM Plotted By: Dadas_Teijeiltree
Date Created:7/5/2022 C:\PW_WORKING\WTR\TD\ADAS\D0202661\55-20-124-10E-616.DWG

LEGEND

CLASS 1 DIV 2

GENERAL SHEET NOTES

1. CLASSIFIED BOUNDARY FOR THE BASINS IS PER NFPA 820, TABLE 5.2.2, ROW 9C AND IS AS FOLLOWS:
   INTERIOR OF THE TANK FROM THE MINIMUM OPERATING WATER SURFACE TO THE TOP OF THE TANK WALL; ENVELOPE 18" ABOVE THE TOP OF THE TANK AND EXTENDING 18" BEYOND THE EXTERIOR WALL:
   ENVELOPE 18" ABOVE GRADE EXTENDING 10' HORIZONTALLY FROM THE EXTERIOR TANK WALLS.
2. FOR AREA CLASSIFICATION CONTINUATION SEE DRAWING 30-E-101.

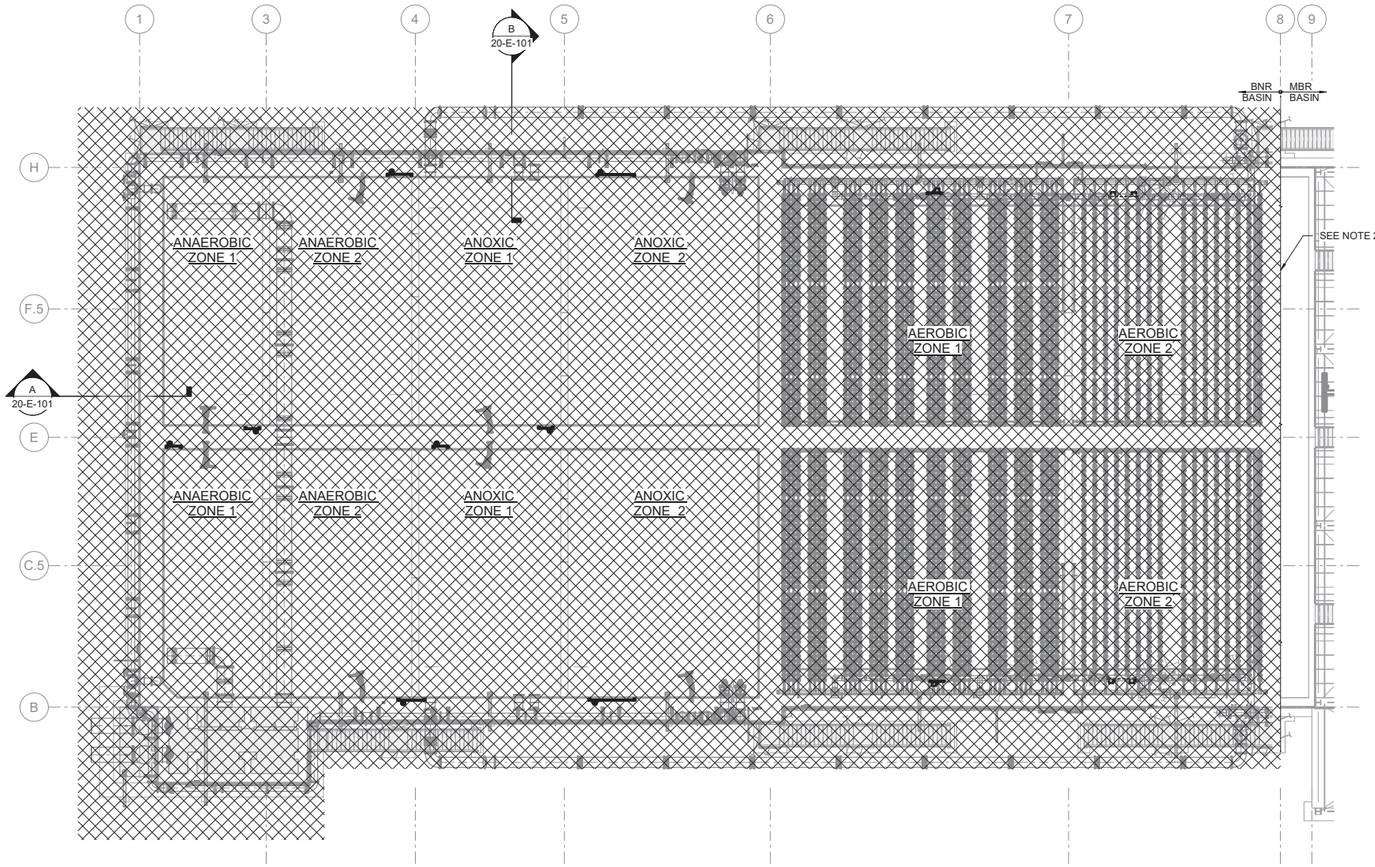

AREA CLASSIFICATION PLAN

SCALE: 1/16" = 1'-0"

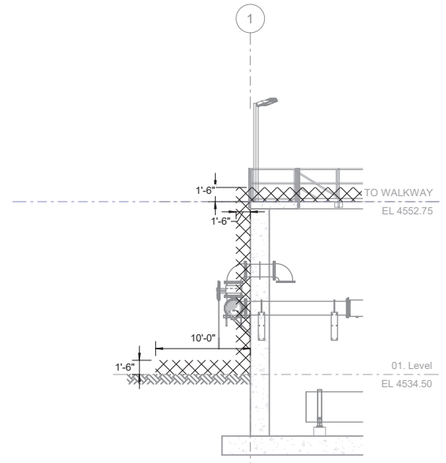

A 20-E-101 NORTH SIDE CLASSIFICATION SECTION

SCALE: 1/8" = 1'-0"

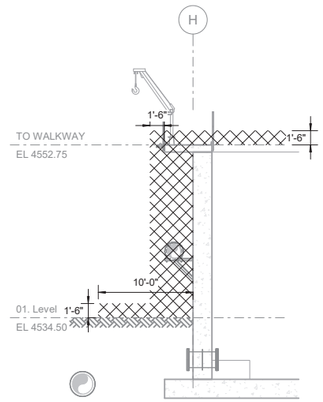

B 20-E-101 WEST SIDE CLASSIFICATION SECTION

SCALE: 1/8" = 1'-0"

J-U-B ENGINEERS, INC.

J-U-B ENGINEERS, INC.
392. E. Winchester St., Suite 300
Salt Lake City, UT 84107
Phone: 801.547.0393
www.jub.com

Subconsultant:

Stantec

Stantec
2890 E Cottonwood Pkwy
Ste 300
Salt Lake City, UT 84121
Tel: 801.617.3200
www.stantec.com

AGENCY

REVIEW

REUSE OF DRAWINGS

J-U-B SHALL RETAIN ALL COMMON LAW, STATUTORY, COPYRIGHT AND OTHER RESERVED RIGHTS IN THE DRAWINGS, SPECIFICATIONS, AND OTHER DOCUMENTS PREPARED BY J-U-B. ALL DRAWINGS, SPECIFICATIONS, AND OTHER DOCUMENTS PREPARED BY J-U-B SHALL NOT BE REUSED WITHOUT J-U-B'S PRIOR WRITTEN CONSENT. ANY REUSE WITHOUT WRITTEN CONSENT BY J-U-B WILL BE AT CLIENT'S SOLE RISK AND WITHOUT LIABILITY OR LEGAL EXPOSURE TO J-U-B.

NO.	DESCRIPTION	BY	APP.	DATE
	REVISION			

SPANISH FORK & MAPLETON WRF
SPANISH FORK CITY CORPORATION

20 - BNR PROCESS
AREA CLASSIFICATION PLAN

FILE:
JUB PROJ. #: 55-20-124
DRAWN BY: TBD
DESIGN BY: KES
CHECKED BY:SK

ONE INCH
AT FULL SIZE, IF NOT ONE INCH, SCALE ACCORDINGLY

LAST UPDATED: 07/08/2022

DRAWING:
20-E-101

SHEET: 626 OF 691

7/8/2022 5:11:05 PM
BIM 360://Spanish Fork and Mapleton WRF Design/55-20-124_20e-md.rvt

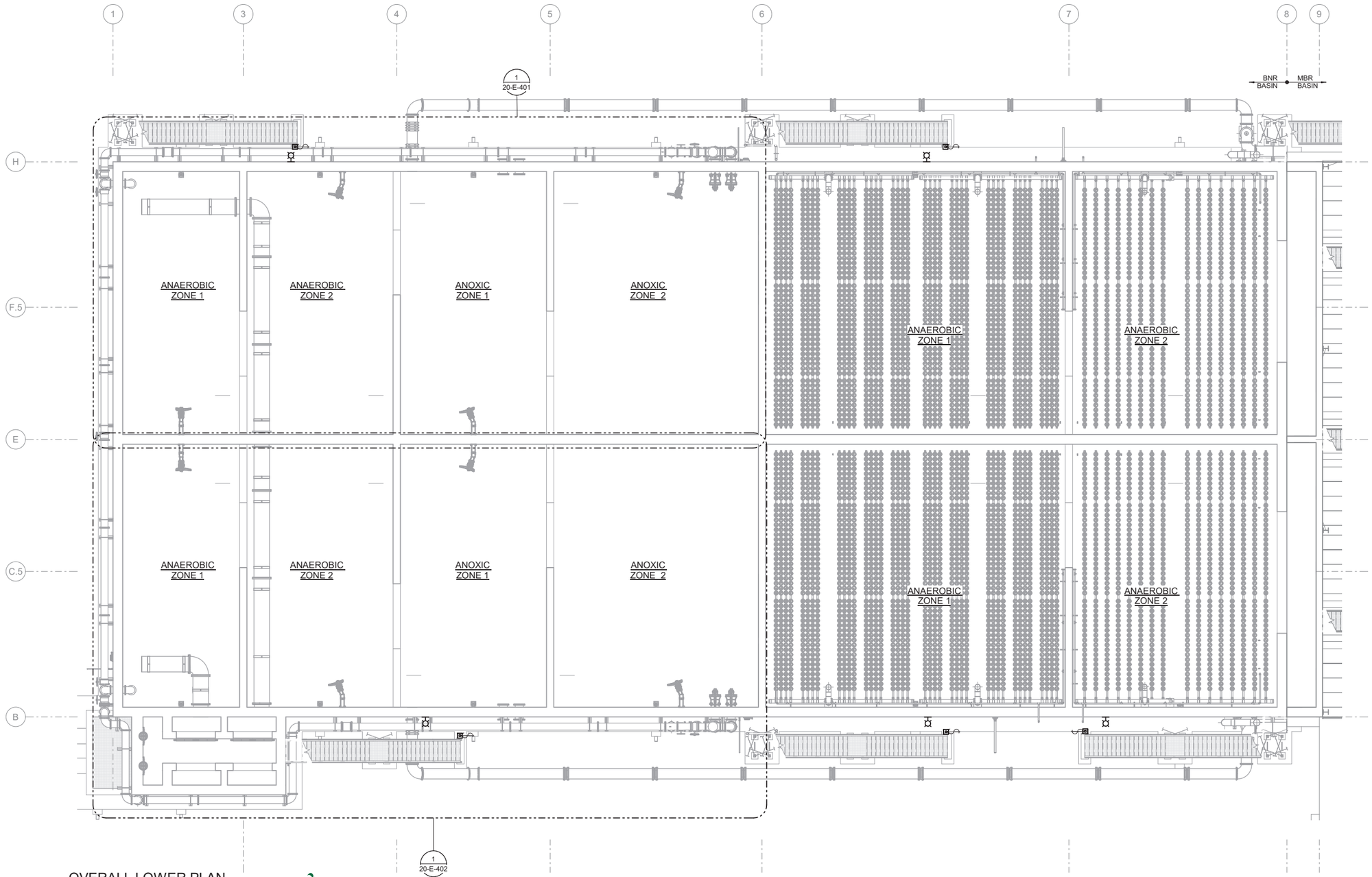

OVERALL LOWER PLAN

SCALE: 3/32" = 1'-0"

7/8/2022 5:11:38 PM
BIM 360://Spanish Fork and Mapleton WRF Design/55-20-124_20e-md.rvt

J-U-B ENGINEERS, INC.

J-U-B ENGINEERS, INC.
392 E. Winchester St., Suite 300
Salt Lake City, UT 84107
Phone: 801.547.0393
www.jub.com

Subconsultant:

Stantec

Stantec
2890 E Cottonwood Pkwy
Ste 300
Salt Lake City, UT 84121
Tel: 801.617.3200
www.stantec.com

AGENCY

REVIEW

REUSE OF DRAWINGS

J-U-B SHALL RETAIN ALL COMMON LAW, STATUTORY, COPYRIGHT AND OTHER RESERVED RIGHTS IN THE DRAWINGS, SPECIFICATIONS, AND OTHER MATERIALS AND SHALL NOT BE REUSED WITHOUT J-U-B'S PRIOR WRITTEN CONSENT. ANY REUSE WITHOUT WRITTEN CONSENT BY J-U-B WILL BE AT CLIENT'S SOLE RISK AND WITHOUT LIABILITY OR LEGAL EXPOSURE TO J-U-B.

NO.	DESCRIPTION	BY	APP.	DATE
	REVISION			

SPANISH FORK & MAPLETON WRF
SPANISH FORK CITY CORPORATION

20 - BNR PROCESS
OVERALL LOWER PLAN

FILE:
JUB PROJ. #: 55-20-124
DRAWN BY: TBD
DESIGN BY: KES
CHECKED BY:SK

ONE INCH
AT FULL SIZE, IF NOT ONE INCH, SCALE ACCORDINGLY

LAST UPDATED: 07/08/2022

DRAWING:
20-E-102

SHEET: 627 OF 691

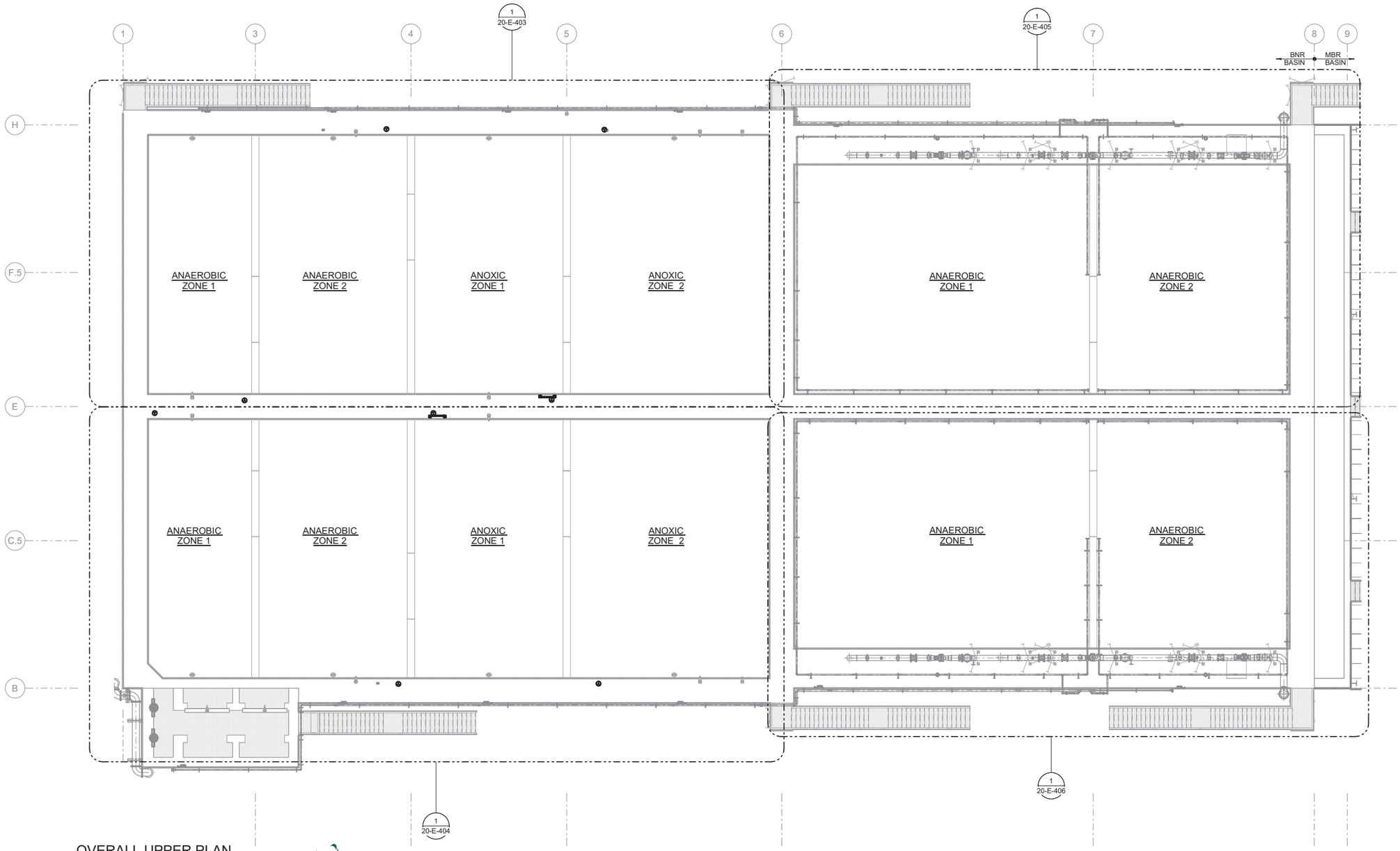

OVERALL UPPER PLAN

SCALE: 3/32" = 1'-0"

7/8/2022 5:11:46 PM
BIM 360://Spanish Fork and Mapleton WRF Design/55-20-124_20e-md.rvt

J-U-B ENGINEERS, INC.

J-U-B ENGINEERS, INC.
392. E. Winchester St., Suite 300
Salt Lake City, UT 84107
Phone: 801.547.0393
www.jub.com

Subconsultant:

Stantec

Stantec
2890 E Cottonwood Pkwy
Ste 300
Salt Lake City, UT 84121
Tel: 801.617.3200
www.stantec.com

AGENCY

REVIEW

REUSE OF DRAWINGS

J-U-B SHALL RETAIN ALL COMMON LAW, STATUTORY, COPYRIGHT AND OTHER RESERVED RIGHTS IN THE DRAWINGS, SPECIFICATIONS, AND OTHER MATERIALS AND SHALL NOT BE REUSED WITHOUT J-U-B'S PRIOR WRITTEN CONSENT. ANY REUSE WITHOUT WRITTEN CONSENT BY J-U-B WILL BE AT CLIENT'S SOLE RISK AND WITHOUT LIABILITY OR LEGAL EXPOSURE TO J-U-B.

NO.	DESCRIPTION	BY	APP'D	DATE
	REVISION			

SPANISH FORK & MAPLETON WRF
SPANISH FORK CITY CORPORATION

20 - BNR PROCESS
OVERALL UPPER PLAN

FILE:
JUB PROJ. #: 55-20-124
DRAWN BY: TBD
DESIGN BY: KES
CHECKED BY:SK

ONE INCH
AT FULL SIZE, IF NOT ONE INCH, SCALE ACCORDINGLY

LAST UPDATED: 07/08/2022

DRAWING:
20-E-103

SHEET: 628 OF 691

SHEET KEYNOTE

3	MOUNT FIT BELOW PIPE.

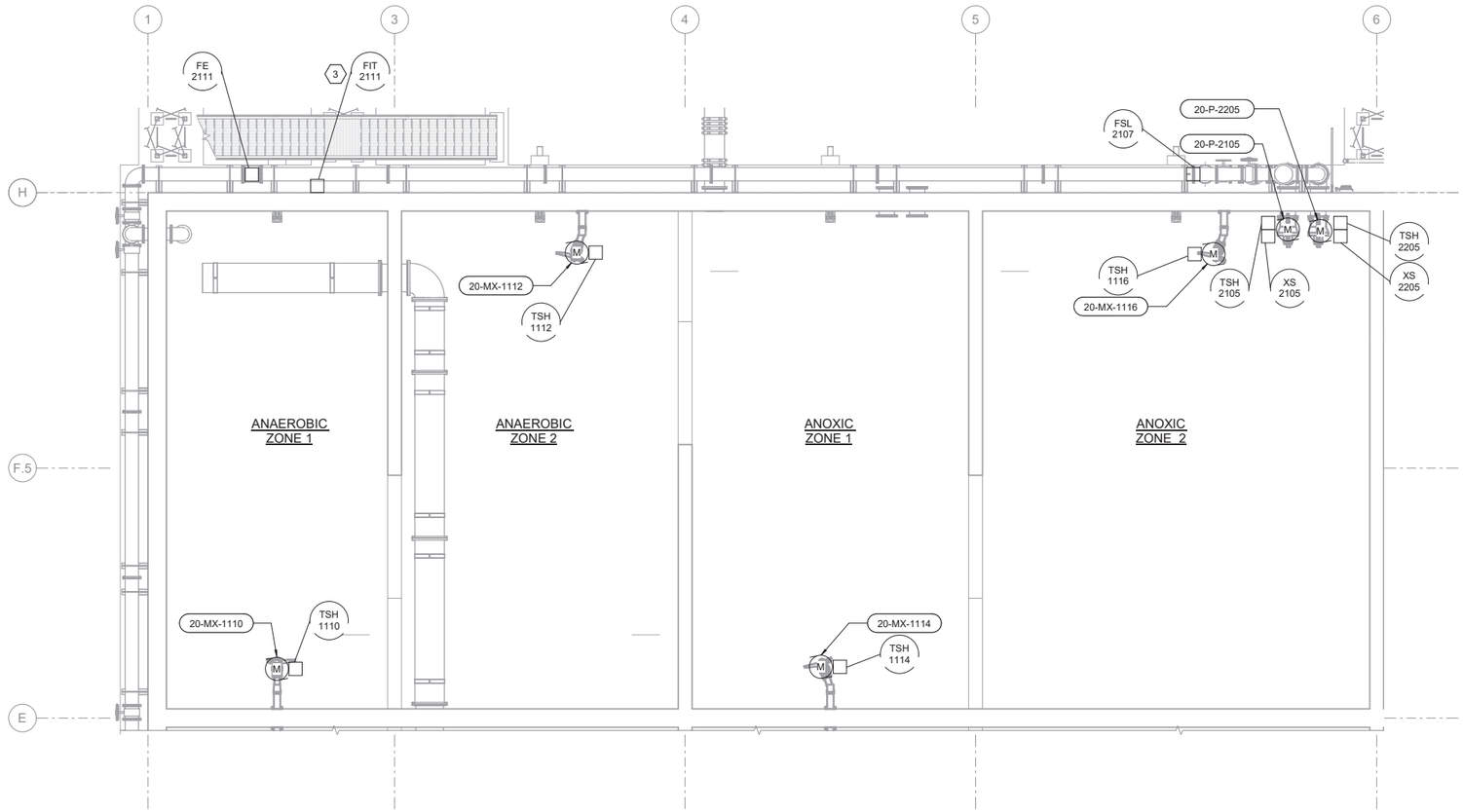

1 / 20-E-102 LOWER FLOOR POWER PLAN - I

SCALE: 1/8" = 1'-0"

J-U-B ENGINEERS, INC.

J-U-B ENGINEERS, INC.
392. E. Winchester St., Suite 300
Salt Lake City, UT 84107
Phone: 801.547.0393
www.jub.com

Subconsultant:

Stantec

Stantec
2890 E Cottonwood Pkwy
Ste 300
Salt Lake City, UT 84121
Tel: 801.617.3200
www.stantec.com

AGENCY

REVIEW

REUSE OF DRAWINGS

J-U-B SHALL RETAIN ALL COMMON LAW, STATUTORY, COPYRIGHT AND OTHER RESERVED RIGHTS, INCLUDING THE COPYRIGHT, IN THESE DRAWINGS. THEY SHALL NOT BE REUSED WITHOUT J-U-B'S PRIOR WRITTEN CONSENT. ANY REUSE WITHOUT WRITTEN CONSENT BY J-U-B WILL BE AT CLIENT'S SOLE RISK AND WITHOUT LIABILITY OR LEGAL EXPOSURE TO J-U-B.

NO.	DESCRIPTION	BY	APP'D	DATE
	REVISION			

SPANISH FORK & MAPLETON WRF
SPANISH FORK CITY CORPORATION

20 - BNR PROCESS
LOWER FLOOR POWER PLAN - I

FILE:
JUB PROJ. #: 55-20-124
DRAWN BY: TBD
DESIGN BY: KES
CHECKED BY:SK

ONE INCH
AT FULL SIZE, IF NOT ONE INCH, SCALE ACCORDINGLY

LAST UPDATED: 07/08/2022

DRAWING:
20-E-401

SHEET: 629 OF 691

7/8/2022 5:11:53 PM
BIM 360://Spanish Fork and Mapleton WRF Design/55-20-124_20e-md.rvt

SHEET KEYNOTE

3	MOUNT FIT BELOW PIPE.

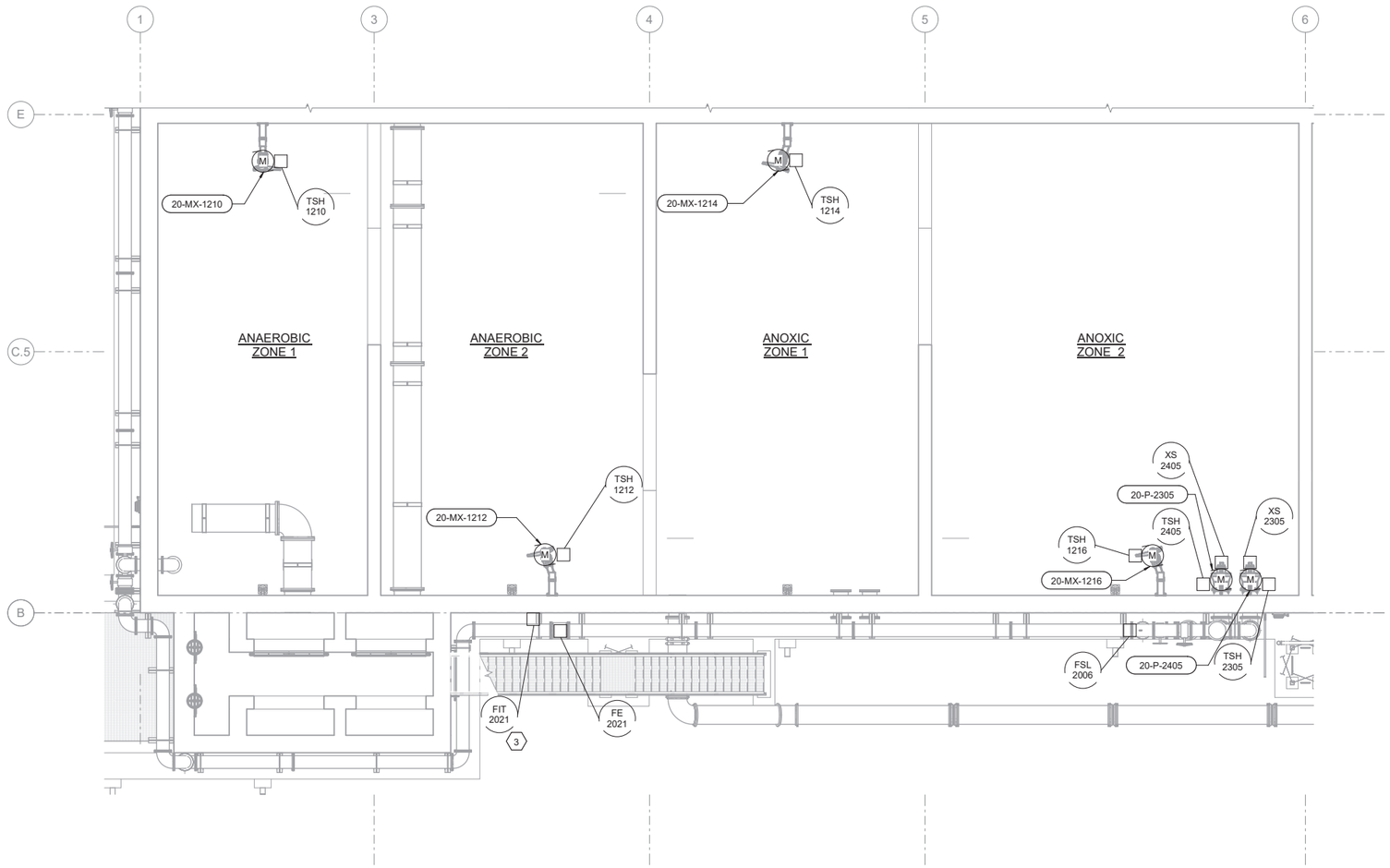

1 / 20-E-102 LOWER FLOOR POWER PLAN - II

SCALE: 1/8" = 1'-0"

7/6/2022 5:11:56 PM
BIM 360://Spanish Fork and Mapleton WRF Design/55-20-124_20e-md.rvt

J-U-B ENGINEERS, INC.

J-U-B ENGINEERS, INC.
392. E. Winchester St., Suite 300
Salt Lake City, UT 84107
Phone: 801.547.0393
www.jub.com

Subconsultant:

Stantec

Stantec
2890 E Cottonwood Pkwy
Ste 300
Salt Lake City, UT 84121
Tel: 801.617.3200
www.stantec.com

AGENCY

REVIEW

REUSE OF DRAWINGS

J-U-B SHALL RETAIN ALL COMMON LAW, STATUTORY, COPYRIGHT AND OTHER RESERVED RIGHTS IN THE DRAWINGS AND OTHER DOCUMENTS PREPARED BY J-U-B. NOT BE REUSED WITHOUT J-U-B'S PRIOR WRITTEN CONSENT. ANY REUSE WITHOUT WRITTEN CONSENT BY J-U-B WILL BE AT CLIENT'S SOLE RISK AND WITHOUT LIABILITY OR LEGAL EXPOSURE TO J-U-B.

NO.	DESCRIPTION	BY	APP.	DATE
	REVISION			

SPANISH FORK & MAPLETON WRF
SPANISH FORK CITY CORPORATION

20 - BNR PROCESS
LOWER FLOOR POWER PLAN - II

FILE:
JUB PROJ. #: 55-20-124
DRAWN BY: TBD
DESIGN BY: KES
CHECKED BY:SK

ONE INCH
AT FULL SIZE. IF NOT ONE INCH, SCALE ACCORDINGLY

LAST UPDATED: 07/08/2022

DRAWING:
20-E-402

SHEET: 630 OF 691

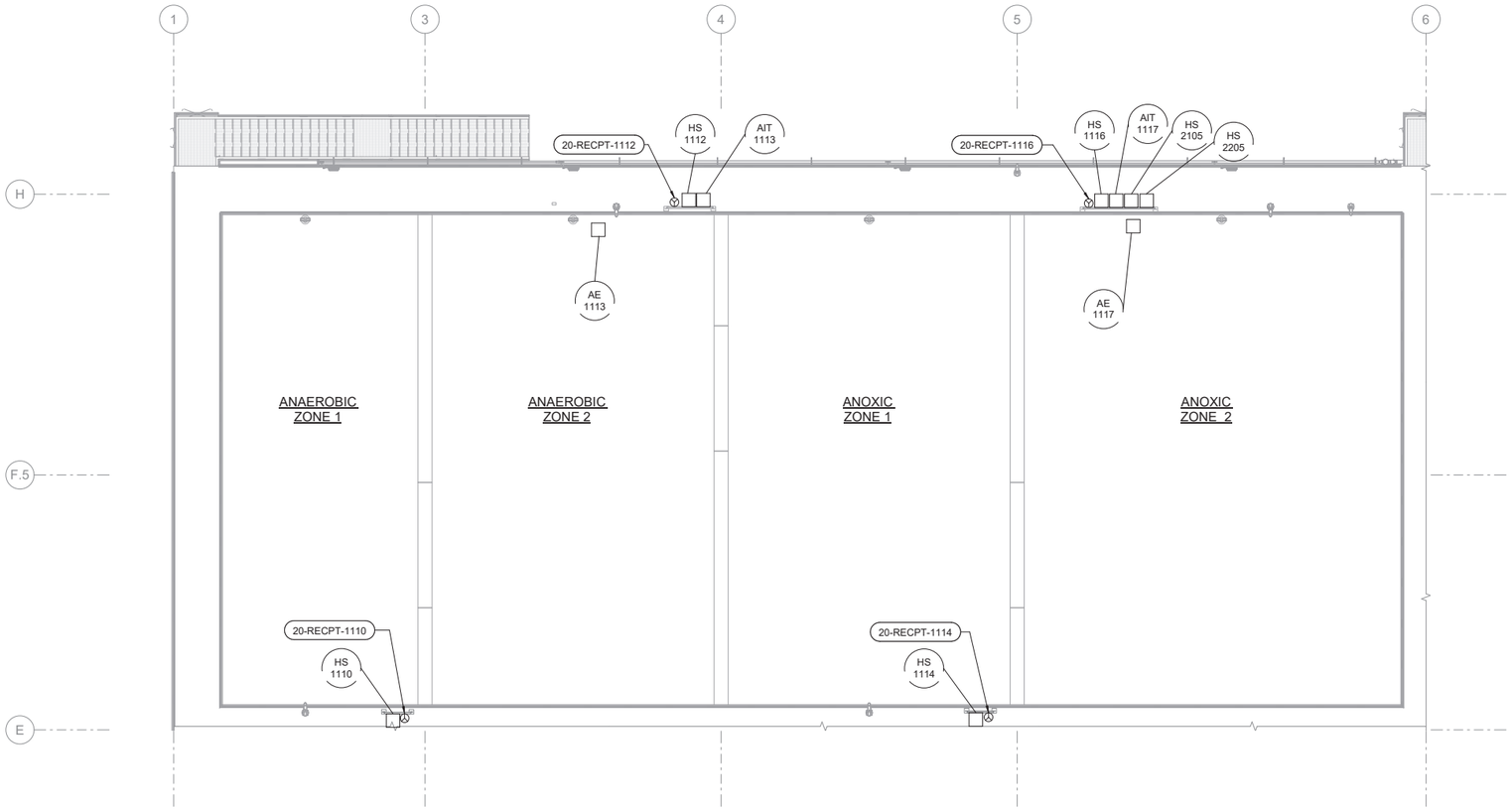

1 / 20-E-103 UPPER FLOOR POWER PLAN - I

SCALE: 1/8" = 1'-0"

7/8/2022 5:11:57 PM
BIM 360://Spanish Fork and Mapleton WRF Design/55-20-124_20e-md.rvt

J-U-B ENGINEERS, INC.

J-U-B ENGINEERS, INC.
392. E. Winchester St., Suite 300
Salt Lake City, UT 84107
Phone: 801.547.0393
www.jub.com

Subconsultant:

Stantec

Stantec
2890 E Cottonwood Pkwy
Ste 300
Salt Lake City, UT 84121
Tel: 801.617.3200
www.stantec.com

AGENCY

REVIEW

REUSE OF DRAWINGS

J-U-B SHALL RETAIN ALL COMMON LAW, STATUTORY, COPYRIGHT AND OTHER RESERVED RIGHTS IN THE DRAWINGS AND SPECIFICATIONS AND SHALL NOT BE REUSED WITHOUT J-U-B'S PRIOR WRITTEN CONSENT. ANY REUSE WITHOUT WRITTEN CONSENT BY J-U-B WILL BE AT CLIENT'S SOLE RISK AND WITHOUT LIABILITY OR LEGAL EXPOSURE TO J-U-B.

NO.	DESCRIPTION	BY	APP.	DATE

REVISION

SPANISH FORK & MAPLETON WRF
SPANISH FORK CITY CORPORATION

20 - BNR PROCESS
UPPER FLOOR POWER PLAN - I

FILE:
JUB PROJ. #: 55-20-124
DRAWN BY: TBD
DESIGN BY: KES
CHECKED BY: SK

ONE INCH
AT FULL SIZE. IF NOT ONE INCH, SCALE ACCORDINGLY

LAST UPDATED: 07/08/2022

DRAWING:
20-E-403

SHEET: 631 OF 691

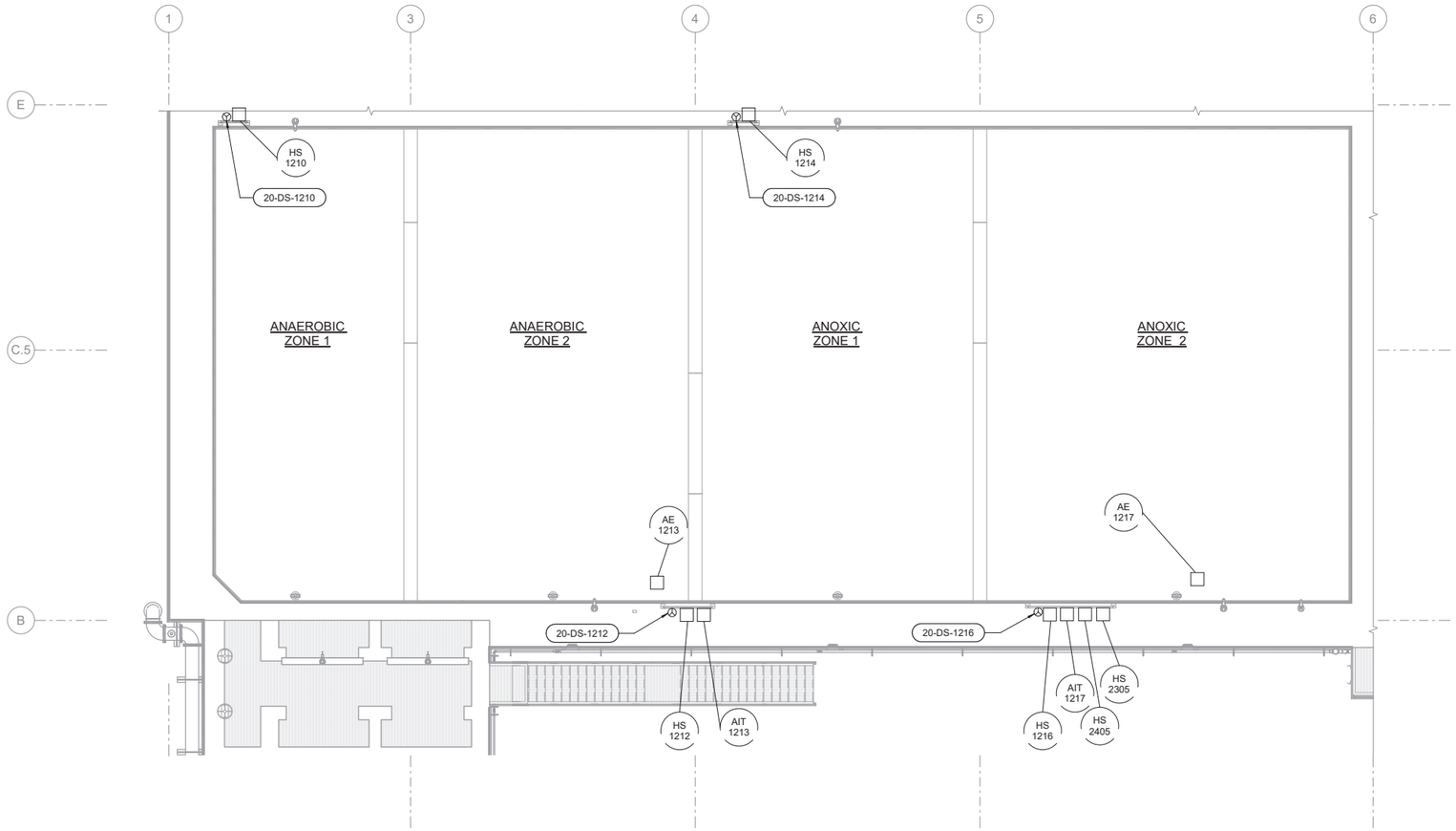

1 / 20-E-103 UPPER FLOOR POWER PLAN - II

SCALE: 1/8" = 1'-0"

7/8/2022 5:11:58 PM
BIM 360://Spanish Fork and Mapleton WRF Design/55-20-124_20e-md.rvt

J-U-B ENGINEERS, INC.

J-U-B ENGINEERS, INC.
392 E. Winchester St., Suite 300
Salt Lake City, UT 84107
Phone: 801.547.0393
www.jub.com

Subconsultant:

Stantec

Stantec
2890 E Cottonwood Pkwy
Ste 300
Salt Lake City, UT 84121
Tel: 801.617.3200
www.stantec.com

AGENCY

REVIEW

REUSE OF DRAWINGS

J-U-B SHALL RETAIN ALL COMMON LAW, STATUTORY, COPYRIGHT AND OTHER RESERVED RIGHTS IN THE DRAWINGS AND OTHER DOCUMENTS PREPARED BY J-U-B. NOT BE REUSED WITHOUT J-U-B'S PRIOR WRITTEN CONSENT. ANY REUSE WITHOUT WRITTEN CONSENT BY J-U-B WILL BE AT CLIENT'S SOLE RISK AND WITHOUT LIABILITY OR LEGAL EXPOSURE TO J-U-B.

NO.	DESCRIPTION	BY	APP.	DATE
	REVISION			

SPANISH FORK & MAPLETON WRF
SPANISH FORK CITY CORPORATION

20 - BNR PROCESS
UPPER FLOOR POWER PLAN - II

FILE:
JUB PROJ. #: 55-20-124
DRAWN BY: TBD
DESIGN BY: KES
CHECKED BY:SK

ONE INCH
AT FULL SIZE, IF NOT ONE INCH, SCALE ACCORDINGLY

LAST UPDATED: 07/08/2022

DRAWING:
20-E-404

SHEET: 632 OF 691

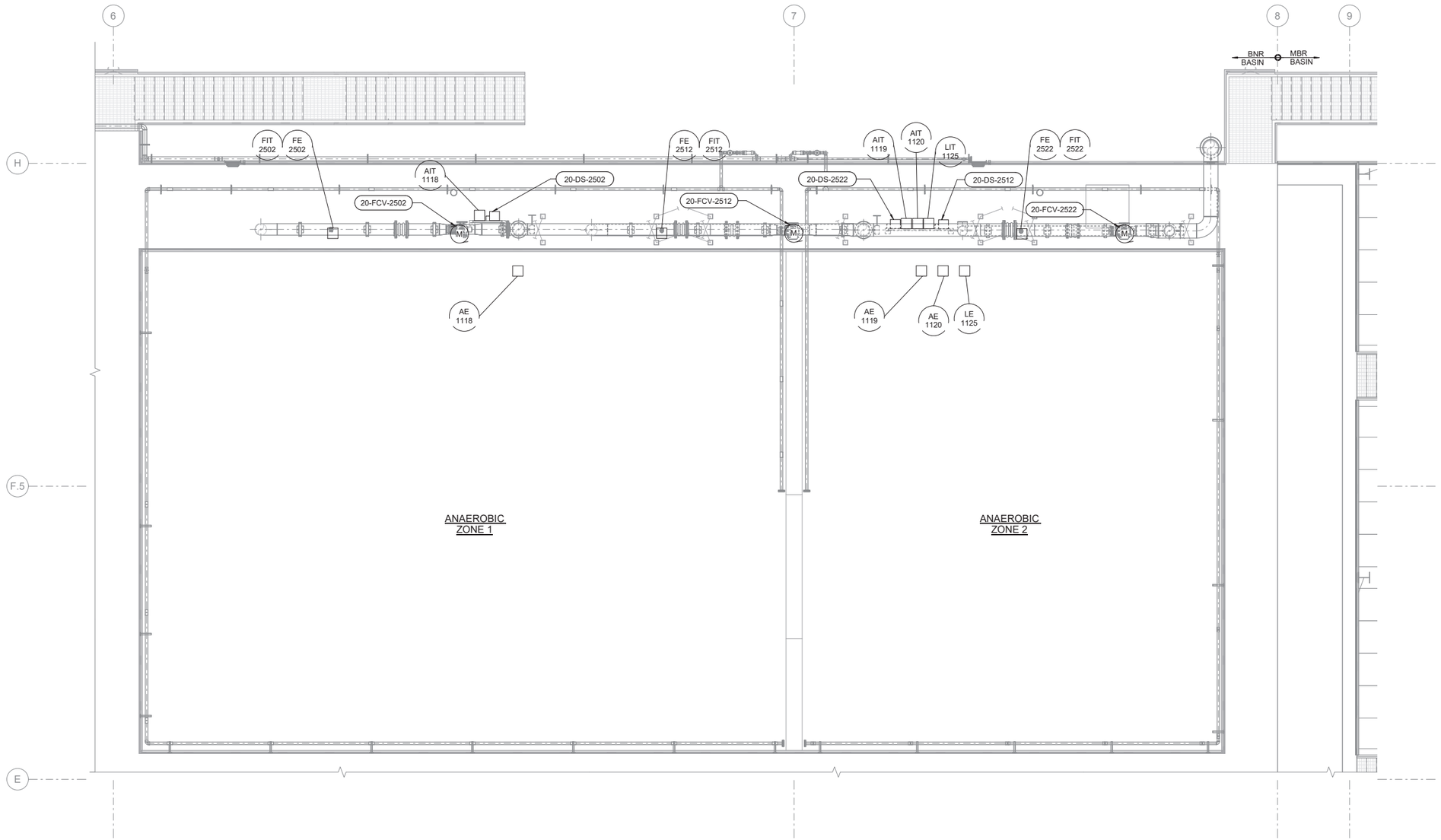

1 / 20-E-103 UPPER FLOOR POWER PLAN - III

SCALE: 3/16" = 1'-0"

7/6/2022 5:12:02 PM
BIM 360://Spanish Fork and Mapleton WRF Design/55-20-124_20e-md.rvt

J-U-B ENGINEERS, INC.

J-U-B ENGINEERS, INC.
392 E. Winchester St., Suite 300
Salt Lake City, UT 84107
Phone: 801.547.0393
www.jub.com

Subconsultant:

Stantec

Stantec
2890 E Cottonwood Pkwy
Ste 300
Salt Lake City, UT 84121
Tel: 801.617.3200
www.stantec.com

AGENCY

REVIEW

REUSE OF DRAWINGS

J-U-B SHALL RETAIN ALL COMMON LAW, STATUTORY, COPYRIGHT AND OTHER RESERVED RIGHTS IN THE DRAWINGS, SPECIFICATIONS, AND OTHER DOCUMENTS PREPARED BY J-U-B. SUCH DOCUMENTS SHALL NOT BE REUSED WITHOUT J-U-B'S PRIOR WRITTEN CONSENT. ANY REUSE WITHOUT WRITTEN CONSENT BY J-U-B WILL BE AT CLIENT'S SOLE RISK AND WITHOUT LIABILITY OR LEGAL EXPOSURE TO J-U-B.

NO.	DESCRIPTION	BY	APP'D	DATE
	REVISION			

SPANISH FORK & MAPLETON WRF
SPANISH FORK CITY CORPORATION

20 - BNR PROCESS
UPPER FLOOR POWER PLAN - III

FILE:
JUB PROJ. #: 55-20-124
DRAWN BY: TBD
DESIGN BY: KES
CHECKED BY: SK

ONE INCH
AT FULL SIZE, IF NOT ONE INCH, SCALE ACCORDINGLY

LAST UPDATED: 07/08/2022

DRAWING:
20-E-405

SHEET: 633 OF 691

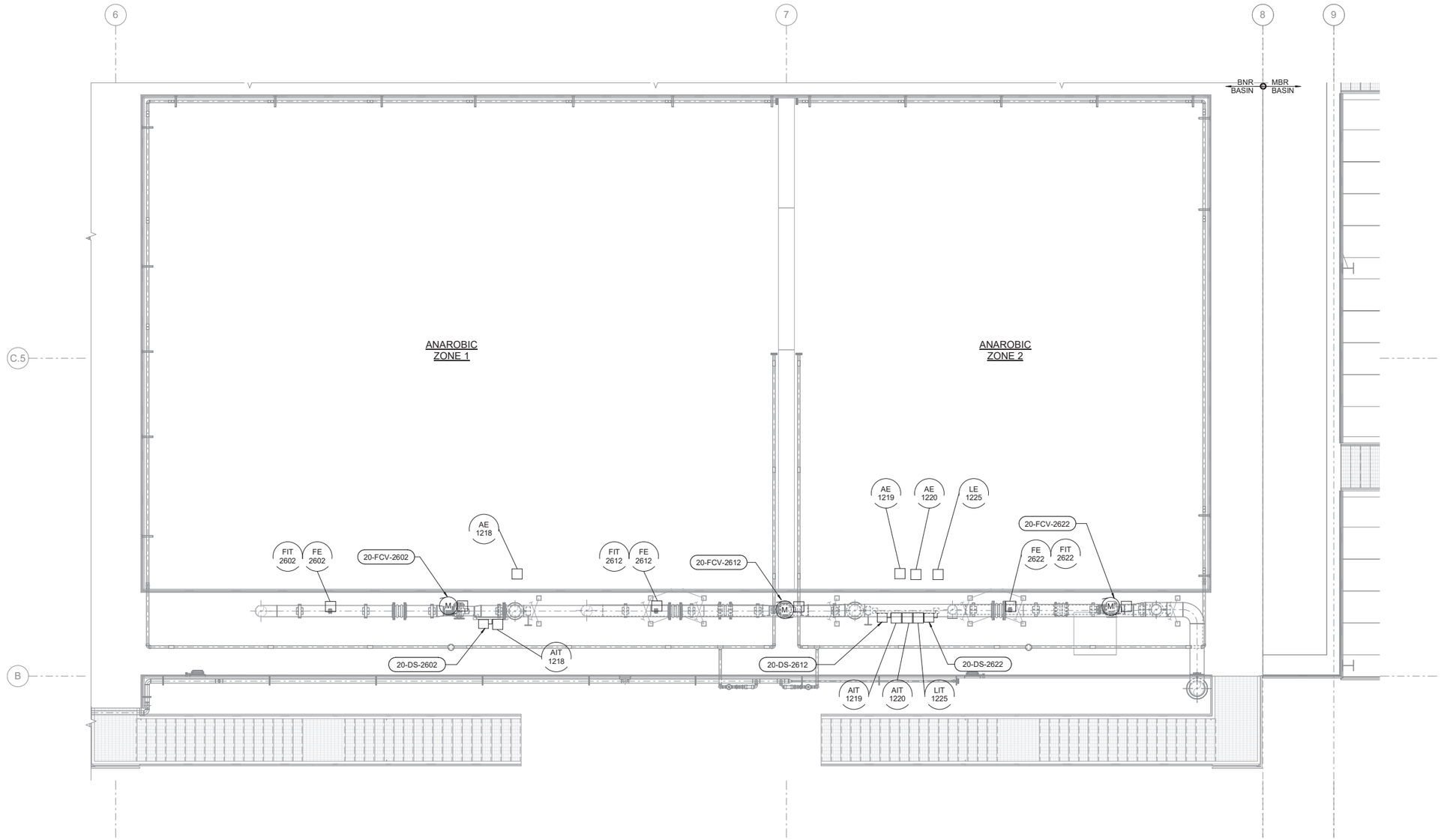

1 / 20-E-103 UPPER FLOOR POWER PLAN - IV

SCALE: 3/16" = 1'-0"

7/8/2022 5:12:05 PM
BIM 360://Spanish Fork and Mapleton WRF Design/55-20-124_20e-md.rvt

J-U-B ENGINEERS, INC.

J-U-B ENGINEERS, INC.
392 E. Winchester St., Suite 300
Salt Lake City, UT 84107
Phone: 801.547.0393
www.jub.com

Subconsultant:

Stantec

Stantec
2890 E Cottonwood Pkwy
Ste 300
Salt Lake City, UT 84121
Tel: 801.617.3200
www.stantec.com

AGENCY

REVIEW

REUSE OF DRAWINGS

J-U-B SHALL RETAIN ALL COMMON LAW, STATUTORY, COPYRIGHT AND OTHER RESERVED RIGHTS IN THE DRAWINGS CONTAINED HEREIN. THESE DRAWINGS SHALL NOT BE REUSED WITHOUT J-U-B'S PRIOR WRITTEN CONSENT. ANY REUSE WITHOUT WRITTEN CONSENT BY J-U-B WILL BE AT CLIENT'S SOLE RISK AND WITHOUT LIABILITY OR LEGAL EXPOSURE TO J-U-B.

NO.	DESCRIPTION	BY	APP.	DATE

REVISION

SPANISH FORK & MAPLETON WRF
SPANISH FORK CITY CORPORATION

20 - BNR PROCESS
UPPER FLOOR POWER PLAN - IV

FILE:
JUB PROJ. #: 55-20-124
DRAWN BY: TBD
DESIGN BY: KES
CHECKED BY:SK

ONE INCH
AT FULL SIZE, IF NOT ONE INCH, SCALE ACCORDINGLY

LAST UPDATED: 07/08/2022

DRAWING:
20-E-406

SHEET: 634 OF 691

SHEET KEYNOTE

1	ALL EQUIPMENT GROUND GRID IN BNR AREA WILL CONNECT TO DUCTBANK GROUND GRID. REFER TO THE OVERALL SITE PLAN FOR DUCTBANK GROUND GRID (05-E-101).
2	WALLPACK LOCATED BELOW PLATFORM ON TANK WALL.

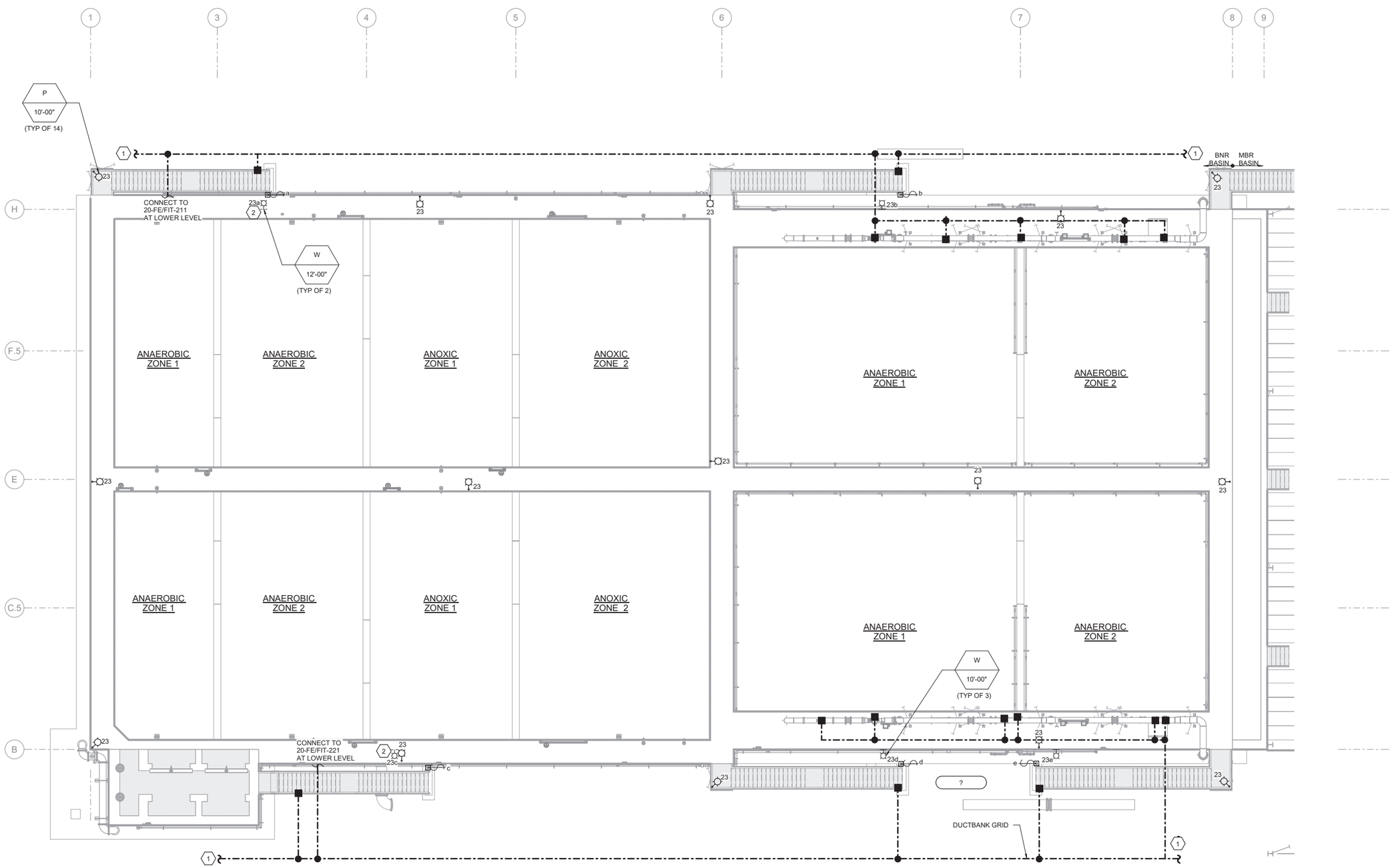

OVERALL LIGHTING PLAN

SCALE: 3/32" = 1'-0"

7/6/2023 5:12:09 PM
BIM 360://Spanish Fork and Mapleton WRF Dsegn\55-20-124_20e-md.rvt

J-U-B ENGINEERS, INC.

J-U-B ENGINEERS, INC.
392 E. Winchester St., Suite 300
Salt Lake City, UT 84107
Phone: 801.547.0393
www.jub.com

Subconsultant:

Stantec

Stantec
2890 E Cottonwood Pkwy
Ste 300
Salt Lake City, UT 84121
Tel: 801.617.3200
www.stantec.com

AGENCY

REVIEW

REUSE OF DRAWINGS

J-U-B SHALL RETAIN ALL COMMON LAW, STATUTORY, COPYRIGHT AND OTHER RESERVED RIGHTS IN THE DRAWINGS, SPECIFICATIONS, MATTER AND IDEAS AND SHALL NOT BE REUSED WITHOUT J-U-B'S PRIOR WRITTEN CONSENT. ANY REUSE WITHOUT WRITTEN CONSENT BY J-U-B WILL BE AT CLIENT'S SOLE RISK AND WITHOUT LIABILITY OR LEGAL EXPOSURE TO J-U-B.

NO.	DESCRIPTION	BY	APP'D	DATE
	REVISION			

SPANISH FORK & MAPLETON WRF
SPANISH FORK CITY CORPORATION

20 - BNR PROCESS
OVERALL LIGHTING PLAN

FILE:
JUB PROJ. #: 55-20-124
DRAWN BY: TBD
DESIGN BY: KES
CHECKED BY:SK

ONE INCH
AT FULL SIZE, IF NOT ONE INCH, SCALE ACCORDINGLY

LAST UPDATED: 07/08/2022

DRAWING:
20-E-407

SHEET: 635 OF 691

PANELBOARD (35-IP-01)

MOTOR CONTROL CENTER (35-MCC-01)

20-VFD-2105 / 20-VFD-2205

PANELBOARD (35-IP-01)

PANELBOARD (35-LP-01)

BNR TRAIN 1

DB-19

20-P-01A 1"C W/ 6#12, 1#12 GND

20-C-01A 1"C W/ 8#14, 1#14 GND

20-P-02A 1"C W/ 6#12, 2#12 GND

20-C-02A 1"C W/ 10#14, 1#14 GND

20-P-03A 1"C W/ 6#12, 3#12 GND

20-C-03A 1"C W/ 12#14, 1#14 GND

20-P-04A 2"C W/ 2-3/C#8 + GND (VFD CABLE)

20-P-05A 1"C W/ 6#12, 1#12 GND

20-P-26A 1"C W/ 2#12, 1#12 GND

05-MH-P01

DB-20
DB-20B
DB-20D

20-P-01B 1"C W/ 6#12, 1#12 GND

20-C-01B 1"C W/ 8#14, 1#14 GND

20-P-02B 1"C W/ 6#12, 2#12 GND

20-C-02B 1"C W/ 10#14, 1#14 GND

20-P-03B 1"C W/ 6#12, 3#12 GND

20-C-03B 1"C W/ 12#14, 1#14 GND

20-P-04B 2"C W/ 2-3/C#8 + GND (VFD CABLE)

DB-20
DB-20B
DB-20C

20-P-05B 1"C W/ 2#12, 1#12 GND

20-P-05C 1"C W/ 2#12, 1#12 GND

20-P-05D 1"C W/ 2#12, 1#12 GND

20-P-26B 1"C W/ 2#12, 1#12 GND

05-MH-P02

DB-22

DB-21

20-P-01C 1"C W/ 2#12, 1#12 GND

20-P-01D 1"C W/ 2#12, 1#12 GND

20-P-01E 1"C W/ 2#12, 1#12 GND

20-C-03C 1"C W/ 6#14, 1#14 GND

20-P-02C 1"C W/ 3#12, 1#12 GND

20-C-01F 1"C W/ 6#14, 1#14 GND

20-P-02E 1"C W/ 3#12, 1#12 GND

20-C-02C 1"C W/ 6#14, 1#14 GND

20-P-03C 1"C W/ 3#12, 1#12 GND

20-C-02F 1"C W/ 6#14, 1#14 GND

20-P-03E 1"C W/ 3#12, 1#12 GND

20-C-02I 1"C W/ 2#14, 1#14 GND

20-P-03G 1"C W/ 2#12, 1#12 GND

20-C-03C 1"C W/ 6#14, 1#14 GND

20-P-04C 1"C W/ 3/C#8 + GND (VFD CABLE)

20-C-03E 1"C W/ 6#14, 1#14 GND

20-P-04F 1"C W/ 3/C#8 + GND (VFD CABLE)

20-CB-0XX

20-TB-0XX

FE 2111

AE 1113

AE 1117

AE 1118

AE 1119

AE 1120

LE 1125

20-S-01F 1"C W/ VENDOR CABLE

VENDOR CABLE

FIT 2111

AIT 1113

AIT 1117

AIT 1118

AIT 1119

AIT 1120

LIT 1125

20-C-01D 3/4"C W/ 2#14, 1#14 GND

20-C-01E 3/4"C W/ 2#14, 1#14 GND

20-C-01G 3/4"C W/ 2#14, 1#14 GND

20-C-01H 3/4"C W/ 2#14, 1#14 GND

20-C-02D 3/4"C W/ 2#14, 1#14 GND

20-C-02E 3/4"C W/ 2#14, 1#14 GND

20-C-02G 3/4"C W/ 2#14, 1#14 GND

20-C-02H 3/4"C W/ 2#14, 1#14 GND

20-C-03D 3/4"C W/ 2#14, 1#14 GND

20-C-03F 3/4"C W/ 2#14, 1#14 GND

20-P-04E 1"C W/ VENDOR CABLE

20-P-04G 1"C W/ VENDOR CABLE

HS 1112

HS 1110

HS 1116

HS 1114

FSL 2107

HS 2105

MS 2105

TSH 2105

20-P-2105 MLR PUMP NO 1

HS 2205

MS 2205

TSH 2205

20-P-2205 MLR PUMP NO 2

20-RECPT-1112

20-RECPT-1110

20-RECPT-1116

20-RECPT-1114

TSH 1112

MS 1112

20-MX-1112 ANAEROBIC MIXER NO 2

TSH 1110

MS 1110

20-MX-1110 ANAEROBIC MIXER NO 1

TSH 1116

MS 1116

20-MX-1116 ANOXIC MIXER NO 2

TSH 1114

MS 1114

20-MX-1114 ANOXIC MIXER NO 1

WEST SIDE HEAT TRACE RECEPTACLE

20-S-01C 1"C W/ 1-2/C#16(SH)

20-S-01D 1"C W/ 1-2/C#16(SH)

20-C-04D 1"C W/ 2#14, 1#14 GND

20-C-04C 1"C W/ 2#14, 1#14 GND

20-S-01E 1"C W/ 1-2/C#16(SH)

20-S-02B 1"C W/ 1-2/C#16(SH)

20-C-05B 1"C W/ 2#14, 1#14 GND

20-C-05C 1"C W/ 2#14, 1#14 GND

20-S-02C 1"C W/ 1-2/C#16(SH)

20-C-05D 1"C W/ 2#14, 1#14 GND

20-S-02D 1"C W/ 1-2/C#16(SH)

20-S-02E 1"C W/ 1-2/C#16(SH)

05-MH-S02

05-MH-P02

20-S-01B 1"C W/ 3-2/C#16(SH)

20-C-04B 1"C W/ 4#14, 1#14 GND

DB-20
DB-20B
DB-20D

05-MH-S01

05-MH-P01

20-S-01A 1"C W/ 3-2/C#16(SH)

20-C-04A 1"C W/ 4#14, 1#14 GND

DB-19

20-C-05A 1"C W/ 6#14, 1#14 GND

20-S-02A 1"C W/ 4-2/C#16(SH)

MBR/BNR PLC
(35-LCP-1000)

REUSE OF DRAWINGS
J-U-B SHALL RETAIN ALL COMMON LAW, STATUTORY, COPYRIGHT AND OTHER RESERVED RIGHTS OF THESE DRAWINGS, AND THE SAME SHALL NOT BE REUSED WITHOUT J-U-B'S PRIOR WRITTEN CONSENT. ANY REUSE WITHOUT WRITTEN CONSENT BY J-U-B WILL BE AT CLIENTS SOLE RISK AND WITHOUT LIABILITY OR LEGAL EXPOSURE TO J-U-B.

NO.	DESCRIPTION	BY	APP'L	DATE
	REVISION			

J-U-B ENGINEERS, INC.
J-U-B ENGINEERS, INC.
392 E. Winchester St., Suite 300
Salt Lake City, UT 84107
Phone: 801.547.0393
www.jub.com

Subconsultant:
Stantec
Stantec
2890 E Cottonwood Pkwy
Suite 300, Salt Lake City, Ut 84121
Tel: +1.801.617.3200
www.stantec.com

AGENCY

REVIEW

SPANISH FORK & MAPLETON WRF
SPANISH FORK CITY CORPORATION

10 - BNR BASINS
CONDUIT DEVELOPMENT - I

FILE : 55-20-124-20E-601
JUB PROJ. # : 55-20-124
DRAWN BY: KES
DESIGN BY: KES
CHECKED BY: SK
ONE INCH
AT FULL SIZE, IF NOT ONE INCH, SCALE ACCORDINGLY
LAST UPDATED: 7/6/2022

DRAWING:
20-E-601

SHEET: 636 OF 691

Plot Date:7/6/2022 4:55 PM Plotted By: Thakare, Ashish
Date Created:7/6/2022 C:\FW_WORKING\WTR\ATHAKARE\D0211518\55-20-124-20E-601.DWG

PANELBOARD (35-IP-01)

MOTOR CONTROL CENTER (35-MCC-01)

20-VFD-2105 / 20-VFD-2205

PANELBOARD (35-IP-01)

PANELBOARD (35-LP-01)

BNR TRAIN 2

DB-23

20-P-06A 1"C W/ 6#12, 1#12 GND

20-C-06A 1"C W/ 6#14, 1#14 GND

20-P-07A 1"C W/ 6#12, 2#12 GND

20-C-07A 1"C W/ 10#14, 1#14 GND

20-P-08A 1"C W/ 6#12, 2#12 GND

20-C-08A 1"C W/ 12#14, 1#14 GND

20-P-09A 2"C W/ 2-3/C#8 + GND (VFD CABLE)

20-P-10A 1"C W/ 8#12, 1#12 GND

20-P-27A 1"C W/ 2#12, 1#12 GND

05-MH-P03

DB-24
DB-24B
DB-24D

20-P-06B 1"C W/ 6#12, 1#12 GND

20-C-06B 1"C W/ 6#14, 1#14 GND

20-P-07B 1"C W/ 6#12, 2#12 GND

20-C-07B 1"C W/ 10#14, 1#14 GND

20-P-08B 1"C W/ 6#12, 2#12 GND

20-C-08B 1"C W/ 12#14, 1#14 GND

20-P-09B 2"C W/ 2-3/C#8 + GND (VFD CABLE)

DB-24
DB-24B
DB-24C

05-MH-P03

DB-26

DB-25

20-P-06C 1"C W/ 2#12, 1#12 GND

20-P-06D 1"C W/ 2#12, 1#12 GND

20-P-06E 1"C W/ 2#12, 1#12 GND

20-C-06C 1"C W/ 6#14, 1#14 GND

20-P-07C 1"C W/ 3#12, 1#12 GND

20-C-06F 1"C W/ 6#14, 1#14 GND

20-P-07E 1"C W/ 3#12, 1#12 GND

20-C-07C 1"C W/ 6#14, 1#14 GND

20-P-08C 1"C W/ 3#12, 1#12 GND

20-C-07F 1"C W/ 6#14, 1#14 GND

20-P-08E 1"C W/ 3#12, 1#12 GND

20-C-08C 1"C W/ 2#14, 1#14 GND

20-P-08G 1"C W/ 2#12, 1#12 GND

20-C-08C 1"C W/ 6#14, 1#14 GND

20-P-09C 1"C W/ 3/C#8 + GND (VFD CABLE)

20-C-08E 1"C W/ 4#14, 1#14 GND

20-P-09E 1"C W/ 3/C#8 + GND (VFD CABLE)

20-P-10B 1"C W/ 2#12, 1#12 GND

20-P-10C 1"C W/ 2#12, 1#12 GND

20-P-10D 1"C W/ 2#12, 1#12 GND

20-P-27B 1"C W/ 2#12, 1#12 GND

20-CB-0XX

20-C-06D 3/4"C W/ 2#14, 1#14 GND

20-C-06E 3/4"C W/ 2#14, 1#14 GND

20-C-06G 3/4"C W/ 2#14, 1#14 GND

20-C-06H 3/4"C W/ 2#14, 1#14 GND

20-C-07D 3/4"C W/ 2#14, 1#14 GND

20-C-07E 3/4"C W/ 2#14, 1#14 GND

20-C-07G 3/4"C W/ 2#14, 1#14 GND

20-C-07H 3/4"C W/ 2#14, 1#14 GND

20-C-08D 3/4"C W/ 2#14, 1#14 GND

20-C-08F 3/4"C W/ 2#14, 1#14 GND

20-TB-0XX

20-P-09D 1"C W/ VENDOR CABLE

20-P-09F 1"C W/ VENDOR CABLE

FE 2021

20-S-03F 1"C W/ VENDOR CABLE

FIT 2021

AE 1213

VENDOR CABLE

AIT 1213

AE 1217

VENDOR CABLE

AIT 1217

HS 1212

20-RECPT-1212

VENDOR CABLE

TSH 1212

MS 1212

20-MX-1112

ANAEROBIC MIXER NO 4

HS 1210

20-RECPT-1210

VENDOR CABLE

TSH 1210

MS 1210

20-MX-1210

ANAEROBIC MIXER NO 3

HS 1216

20-RECPT-1216

VENDOR CABLE

TSH 1216

MS 1216

20-MX-1216

ANOXIC MIXER NO 4

HS 1214

20-RECPT-1214

VENDOR CABLE

TSH 1214

MS 1214

20-MX-1214

ANOXIC MIXER NO 3

FSL 2006

HS 2305

TSH 2305

MS 2305

20-P-2305

MLR PUMP NO 3

HS 2405

TSH 2405

MS 2405

20-P-2405

MLR PUMP NO 4

AE 1218

VENDOR CABLE

AIT 1218

AE 1219

VENDOR CABLE

AIT 1219

AE 1220

VENDOR CABLE

AIT 1220

LE 1225

20-S-04I 1"C W/ VENDOR CABLE

LIT 1225

EAST SIDE HEAT TRACE RECEPTACLE

20-S-03C 1"C W/ 1-2/C#16(SH)

20-S-03D 1"C W/ 1-2/C#16(SH)

20-C-09C 1"C W/ 2#14, 1#14 GND

20-C-09D 1"C W/ 2#14, 1#14 GND

20-S-03E 1"C W/ 1-2/C#16(SH)

DB-26

DB-25

20-S-04B 1"C W/ 1-2/C#16(SH)

20-C-10B 1"C W/ 2#14, 1#14 GND

20-C-10C 1"C W/ 2#14, 1#14 GND

20-S-04C 1"C W/ 1-2/C#16(SH)

20-C-10E 1"C W/ 2#14, 1#14 GND

20-S-04D 1"C W/ 1-2/C#16(SH)

20-S-04E 1"C W/ 1-2/C#16(SH)

DB-24
DB-24B
DB-24C

05-MH-S04

05-MH-P04

05-MH-P03

05-MH-S03

20-S-03B 1"C W/ 3-2/C#16(SH)

20-C-09B 1"C W/ 4#14, 1#14 GND

DB-24
DB-24B
DB-24D

20-C-10A 1"C W/ 6#14, 1#14 GND

20-S-04A 1"C W/ 4-2/C#16(SH)

05-MH-S03

05-MH-P03

20-S-03A 1"C W/ 3-2/C#16(SH)

20-C-09A 1"C W/ 4#14, 1#14 GND

DB-23

DB-23

MBR/BNR PLC (35-LCP-1000)

REUSE OF DRAWINGS
J-U-B SHALL RETAIN ALL COMMON LAW, STATUTORY, COPYRIGHT AND OTHER RESERVED RIGHTS OF THESE DRAWINGS, AND THE SAME SHALL NOT BE REUSED WITHOUT J-U-B'S PRIOR WRITTEN CONSENT. ANY REUSE WITHOUT WRITTEN CONSENT BY J-U-B WILL BE AT CLIENTS SOLE RISK AND WITHOUT LIABILITY OR LEGAL EXPOSURE TO J-U-B.

NO.	DESCRIPTION	BY	APP'L	DATE
	REVISION			

J-U-B ENGINEERS, INC.
J-U-B ENGINEERS, INC.
392 E. Winchester St., Suite 300
Salt Lake City, UT 84107
Phone: 801.547.0393
www.jub.com

Subconsultant:
Stantec
Stantec
2890 E Cottonwood Pkwy
Suite 300, Salt Lake City, Ut 84121
Tel: +1.801.617.3200
www.stantec.com

AGENCY

REVIEW

SPANISH FORK & MAPLETON WRF
SPANISH FORK CITY CORPORATION

20 - BNR BASINS
CONDUIT DEVELOPMENT - II

FILE : 55-20-124-20E-602
JUB PROJ. # : 55-20-124
DRAWN BY: KES
DESIGN BY: KES
CHECKED BY: SK
ONE INCH
AT FULL SIZE, IF NOT ONE INCH, SCALE ACCORDINGLY
LAST UPDATED: 7/6/2022

DRAWING:
20-E-602

SHEET: 637 OF 691

Plot Date:7/6/2022 4:56 PM Plotted By: Thakare, Ashish
Date Created:7/6/2022 C:\FW_WORKING\WTR\ATHAKARE\D0211618\55-20-124-20E-602.DWG

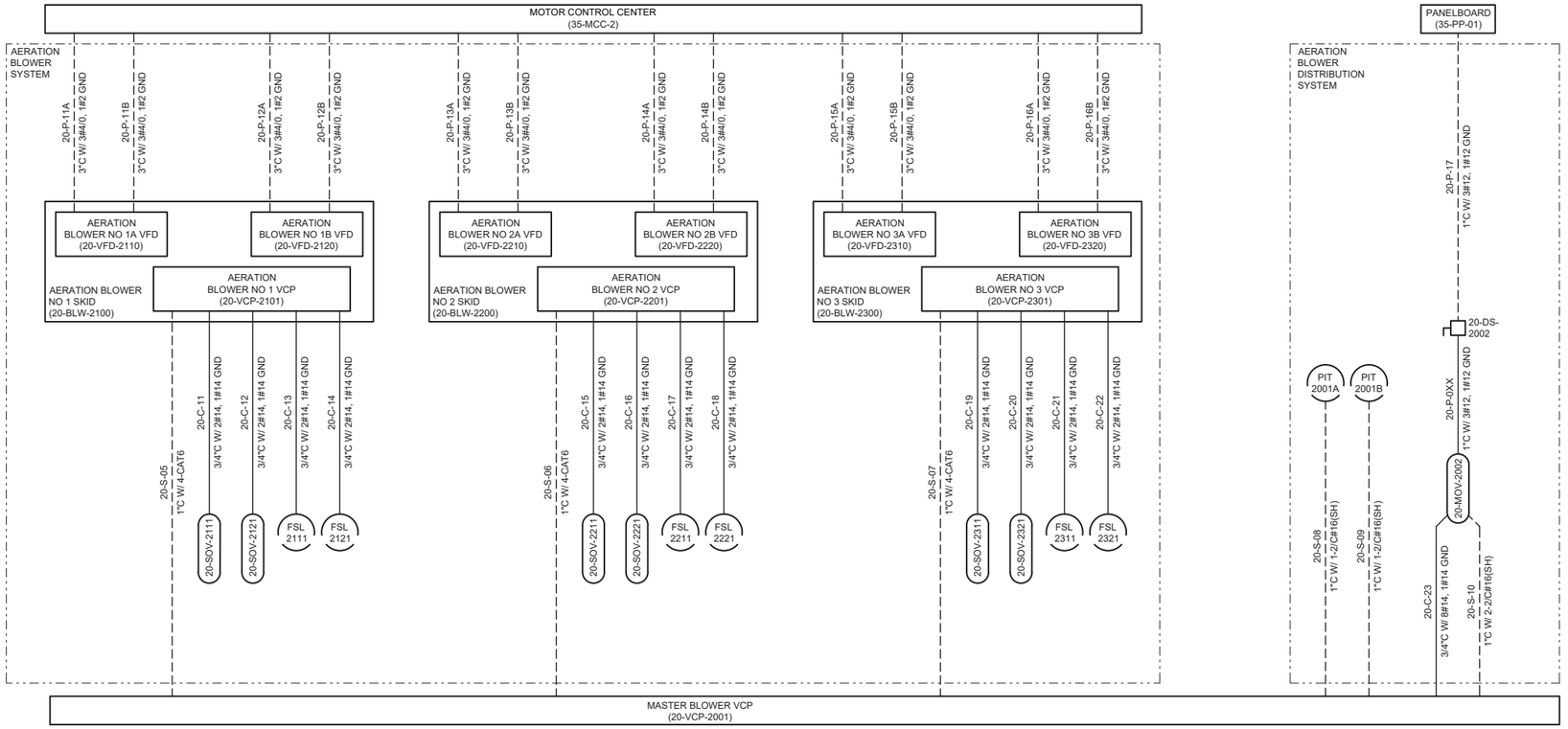

J-U-B ENGINEERS, INC.

J-U-B ENGINEERS, INC.
392. E. Winchester St., Suite 300
Salt Lake City, UT 84107
Phone: 801.547.0393
www.jub.com

Subconsultant:

Stantec
Stantec
2890 E Cottonwood Pkwy
Suite 300, Salt Lake City, Ut 84121
Tel: +1.801.617.3200
www.stantec.com

AGENCY

REVIEW

REUSE OF DRAWINGS
J-U-B SHALL RETAIN ALL COMMON LAW, STATUTORY, COPYRIGHT AND OTHER RESERVED RIGHTS OF THESE DRAWINGS, AND THE SAME SHALL NOT BE REUSED WITHOUT J-U-B'S PRIOR WRITTEN CONSENT. ANY REUSE WITHOUT WRITTEN CONSENT BY J-U-B WILL BE AT CLIENTS SOLE RISK AND WITHOUT LIABILITY OR LEGAL EXPOSURE TO J-U-B.

NO.	DESCRIPTION	BY	APP'L	DATE
	REVISION			

SPANISH FORK & MAPLETON WRF
SPANISH FORK CITY CORPORATION

20 - BNR BASINS
CONDUIT DEVELOPMENT - III

FILE : 55-20-124-20E-603
JUB PROJ. # : 55-20-124
DRAWN BY: KES
DESIGN BY: KES
CHECKED BY: SK

ONE INCH
AT FULL SIZE, IF NOT ONE INCH, SCALE ACCORDINGLY

LAST UPDATED: 7/6/2022

DRAWING:
20-E-603

SHEET: 638 OF 691

Plot Date:7/6/2022 4:56 PM Plotted By: Thakare, Ashish
Date Created:7/6/2022 C:\PW_WORKING\WTR\ATHAKARE\D0211518\55-20-124-20E-603.DWG

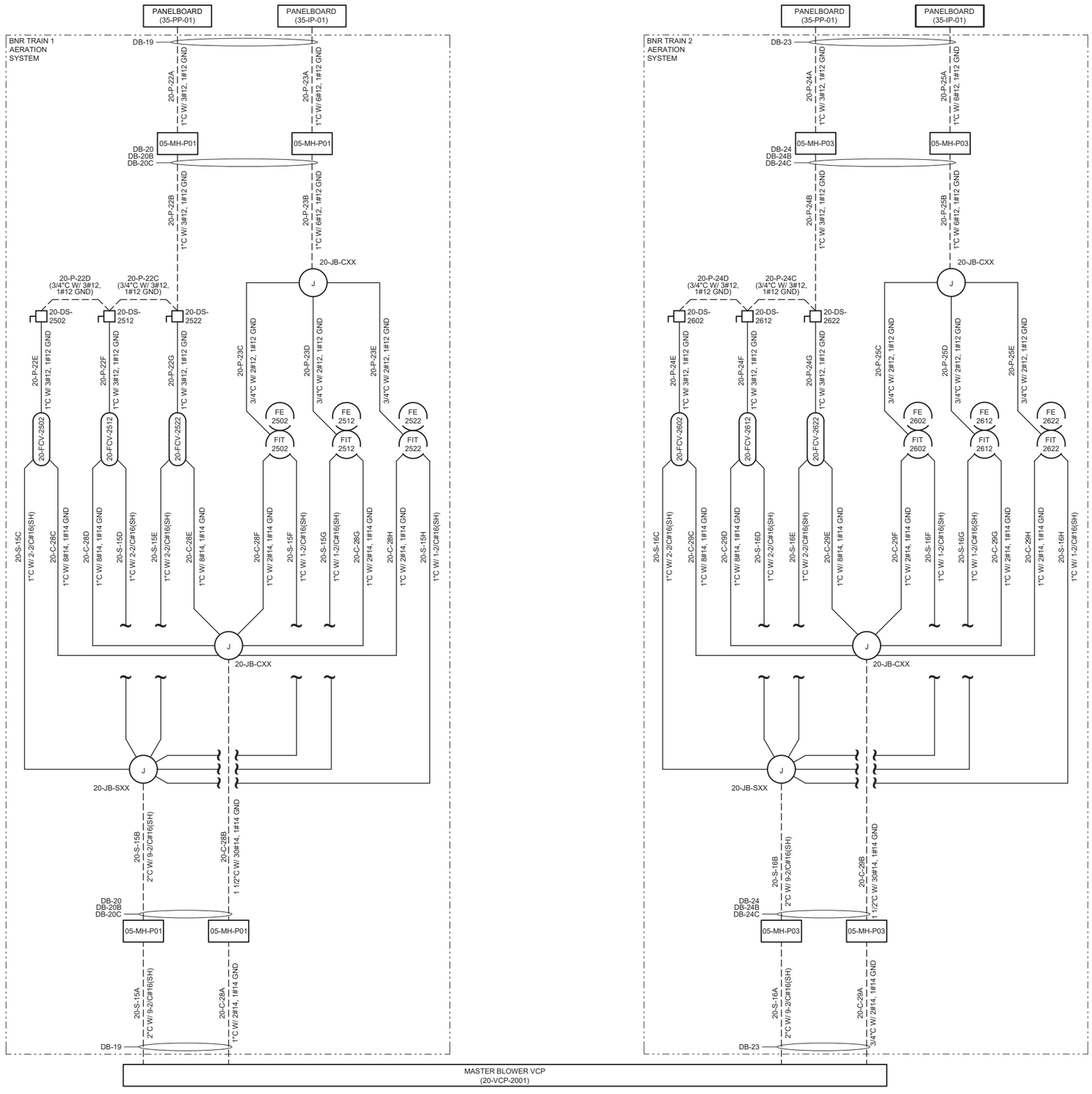

Plot Date:7/6/2022 4:57 PM Plotted By: Thakare, Ashish
Date Created:7/6/2022 C:\FW_WORKING\WTR\ATHAKARE\D0211518\55-20-124-20E-604.DWG

J-U-B ENGINEERS, INC.

J-U-B ENGINEERS, INC.
392 E. Winchester St., Suite 300
Salt Lake City, UT 84107
Phone: 801.547.0393
www.jub.com

Subconsultant:

Stantec

Stantec
2890 E Cottonwood Pkwy
Suite 300, Salt Lake City, Ut
84121
Tel: +1.801.617.3200
www.stantec.com

AGENCY

REVIEW

REUSE OF DRAWINGS:
J-U-B SHALL RETAIN ALL COMMON LAW, STATUTORY, COPYRIGHT AND OTHER RESERVED RIGHTS OF THESE DRAWINGS, AND THE SAME SHALL NOT BE REUSED WITHOUT J-U-B'S PRIOR WRITTEN CONSENT. ANY REUSE WITHOUT WRITTEN CONSENT BY J-U-B WILL BE AT CLIENTS SOLE RISK AND WITHOUT LIABILITY OR LEGAL EXPOSURE TO J-U-B.

NO.	DESCRIPTION	BY	APP'L	DATE
	REVISION			

SPANISH FORK & MAPLETON WRF
SPANISH FORK CITY CORPORATION

20 - BNR BASINS
CONDUIT DEVELOPMENT - IV

FILE :	55-20-124-20E-604
JUB PROJ. # :	55-20-124
DRAWN BY:	KES
DESIGN BY:	KES
CHECKED BY:	SK

ONE INCH
AT FULL SIZE, IF NOT ONE INCH, SCALE ACCORDINGLY

LAST UPDATED: 7/6/2022

DRAWING:
20-E-604

SHEET: 639 OF 691

LEGEND

CLASS 1 DIV 2

GENERAL SHEET NOTES

1. CLASSIFIED BOUNDARY FOR THE BASINS IS PER NFPA 820, TABLE 5.2.2, ROW 9C AND IS AS FOLLOWS:
   INTERIOR OF THE TANK FROM THE MINIMUM OPERATING WATER SURFACE TO THE TOP OF THE TANK WALL; ENVELOPE 18" ABOVE THE TOP OF THE TANK AND EXTENDING 18" BEYOND THE EXTERIOR WALL; ENVELOPE 18" ABOVE GRADE EXTENDING 10' HORIZONTALLY FROM THE EXTERIOR TANK WALLS.
2. FOR AREA CLASSIFICATION CONTINUATION SEE DRAWING 20-E-101.

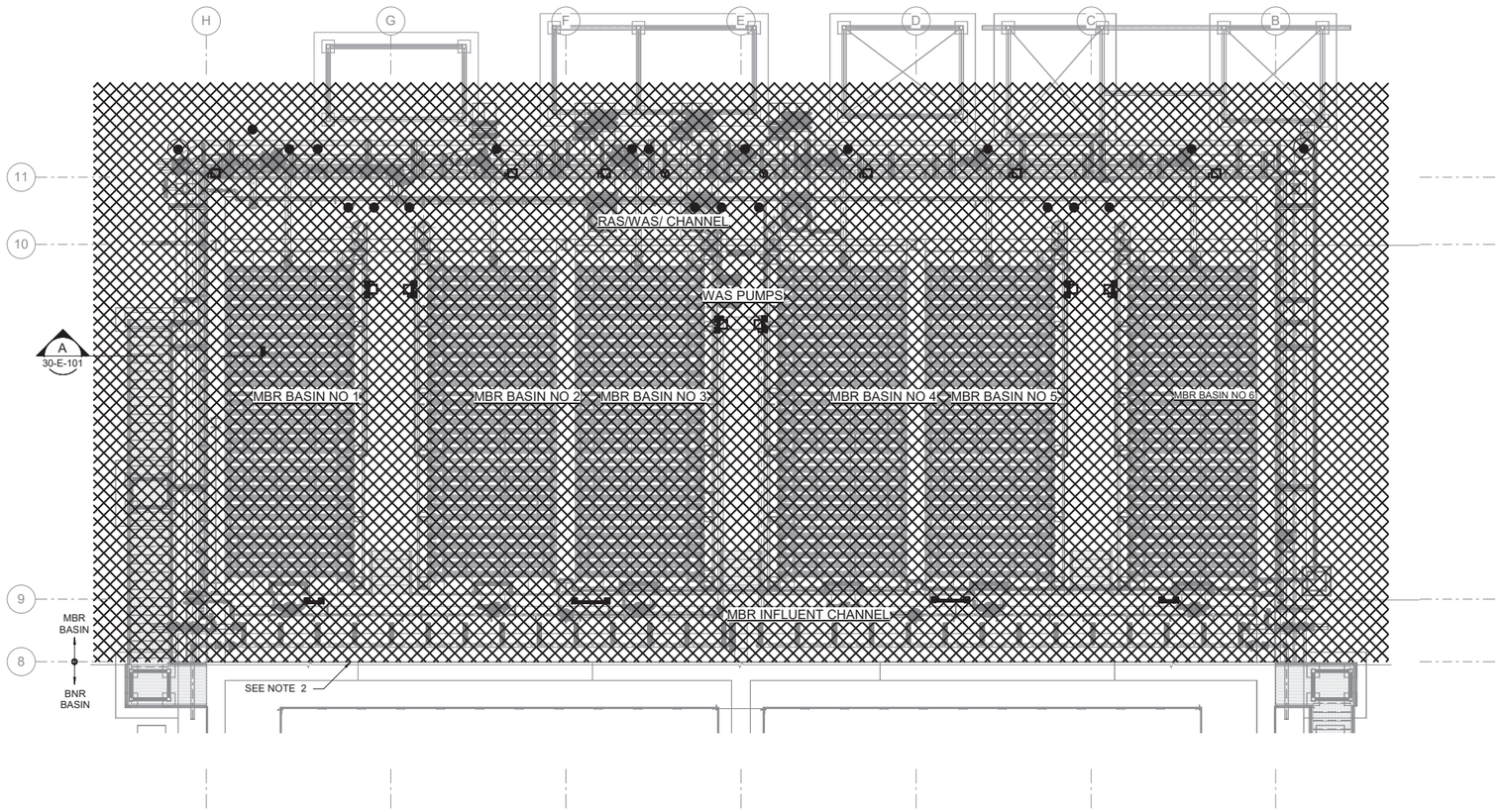

AREA CLASSIFICATION PLAN

SCALE: 1/8" = 1'-0"

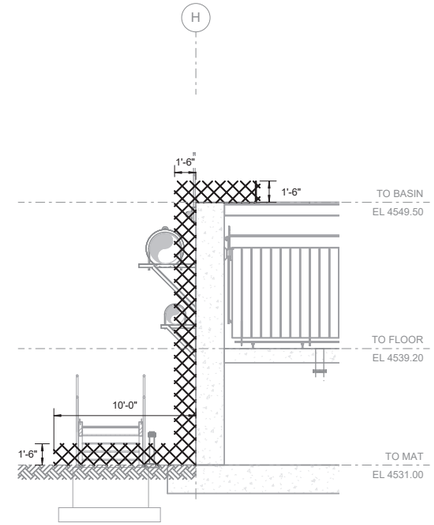

A 30-E-101 WEST SIDE CLASSIFICATION SECTION

SCALE: 3/16" = 1'-0"

(TYPICAL FOR SOUTH AND EAST SIDE)

J-U-B ENGINEERS, INC.

J-U-B ENGINEERS, INC.
392 E. Winchester St., Suite 300
Salt Lake City, UT 84107
Phone: 801.547.0393
www.jub.com

Subconsultant:

Stantec

Stantec
2890 E Cottonwood Pkwy
Ste 300
Salt Lake City, UT 84121
Tel: 801.617.3200
www.stantec.com

AGENCY

REVIEW

REUSE OF DRAWINGS
J-U-B SHALL RETAIN ALL COMMON LAW, STATUTORY, COPYRIGHT AND OTHER RESERVED RIGHTS IN THE DRAWINGS. ALL DRAWINGS SHALL NOT BE REUSED WITHOUT J-U-B'S PRIOR WRITTEN CONSENT. ANY REUSE WITHOUT WRITTEN CONSENT BY J-U-B WILL BE AT CLIENT'S SOLE RISK AND WITHOUT LIABILITY OR LEGAL EXPOSURE TO J-U-B.

NO.	DESCRIPTION	BY	APPR.	DATE
	REVISION			

SPANISH FORK & MAPLETON WRF
SPANISH FORK CITY CORPORATION

30 - MBR PROCESS
AREA CLASSIFICATION PLAN

FILE:
JUB PROJ. #: 55-20-124
DRAWN BY: KES
DESIGN BY: KES
CHECKED BY:

ONE INCH
AT FULL SIZE. IF NOT ONE INCH, SCALE ACCORDINGLY

LAST UPDATED: 07/08/2022

DRAWING:
30-E-101

SHEET: 640 OF 691

7/8/2022 5:06:49 PM
BIM 360://Spanish Fork and Mapleton WRF Design\55-20-124_30e-md.rvt

SHEET KEYNOTE

3	MOUNT FIT BELOW PIPE.

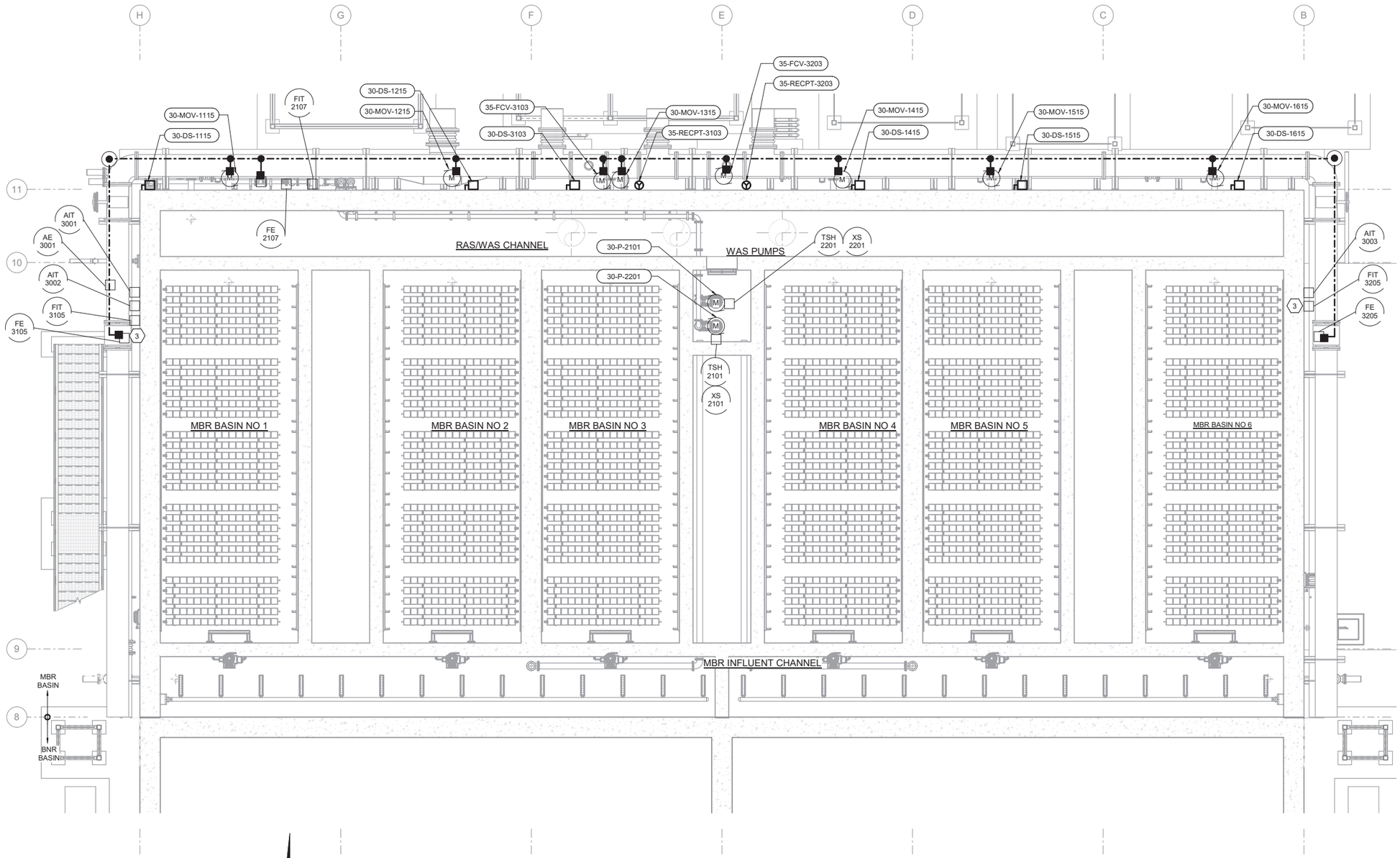

LOWER LEVEL ELECTRICAL PLAN

SCALE: 3/16" = 1'-0"

J-U-B ENGINEERS, INC.

J-U-B ENGINEERS, INC.
392. E. Winchester St., Suite 300
Salt Lake City, UT 84107
Phone: 801.547.0393
www.jub.com

Subconsultant:

Stantec

Stantec
2890 E Cottonwood Pkwy
Ste 300
Salt Lake City, UT 84121
Tel: 801.617.3200
www.stantec.com

AGENCY

REVIEW

REUSE OF DRAWINGS

J-U-B SHALL RETAIN ALL COMMON LAW, STATUTORY, COPYRIGHT AND OTHER RESERVED RIGHTS IN THESE DRAWINGS. ALL DRAWINGS, AS INSTRUMENTS OF SERVICE, SHALL NOT BE REUSED WITHOUT J-U-B'S PRIOR WRITTEN CONSENT. ANY REUSE WITHOUT WRITTEN CONSENT BY J-U-B WILL BE AT CLIENT'S SOLE RISK AND WITHOUT LIABILITY OR LEGAL EXPOSURE TO J-U-B.

NO.	DESCRIPTION	BY	APP'D	DATE

REVISION

SPANISH FORK & MAPLETON WRF
SPANISH FORK CITY CORPORATION

30 - MBR PROCESS
LOWER LEVEL ELECTRICAL PLAN

FILE:
JUB PROJ. #: 55-20-124
DRAWN BY: TBD
DESIGN BY: KES
CHECKED BY:SK

ONE INCH
AT FULL SIZE. IF NOT ONE INCH, SCALE ACCORDINGLY

LAST UPDATED: 07/08/2022

DRAWING:
30-E-102

SHEET: 641 OF 691

7/8/2022 5:06:05 PM
BIM 360://Spanish Fork and Mapleton WRF Design/55-20-124_30e-md.rvt

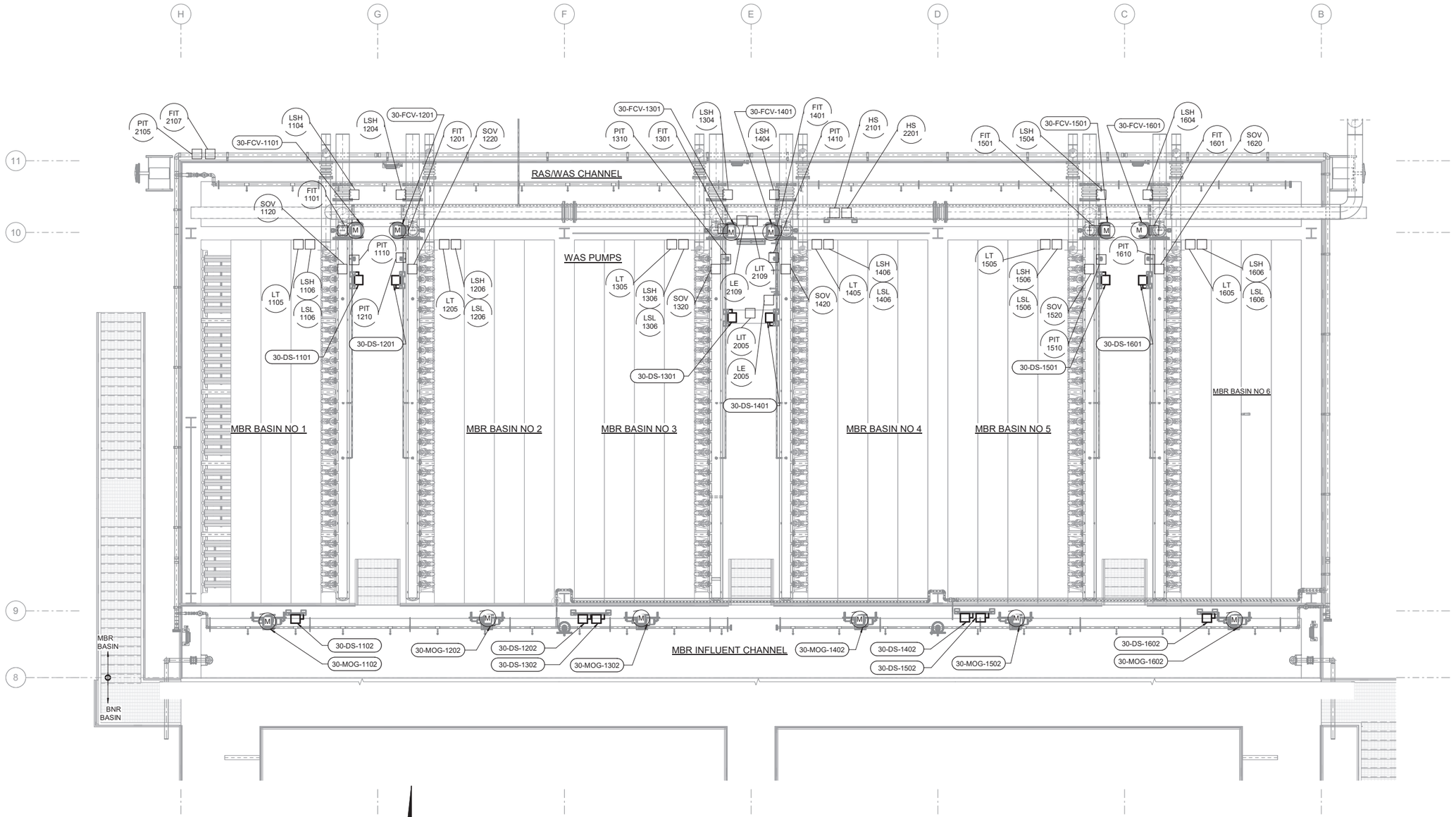

UPPER LEVEL POWER AND EQUIPMENT PLAN

SCALE: 3/16" = 1'-0"

7/8/2022 5:08:38 PM
BIM 360://Spanish Fork and Mapleton WRF Design/55-20-124_30e-md.rvt

J-U-B ENGINEERS, INC.

J-U-B ENGINEERS, INC.
392. E. Winchester St., Suite 300
Salt Lake City, UT 84107
Phone: 801.547.0393
www.jub.com

Subconsultant:

Stantec

Stantec
2890 E Cottonwood Pkwy
Ste 300
Salt Lake City, UT 84121
Tel: 801.617.3200
www.stantec.com

AGENCY

REVIEW

REUSE OF DRAWINGS

J-U-B SHALL RETAIN ALL COMMON LAW, STATUTORY, COPYRIGHT AND OTHER RESERVED RIGHTS IN THESE DRAWINGS. THESE DRAWINGS SHALL NOT BE REUSED WITHOUT J-U-B'S PRIOR WRITTEN CONSENT. ANY REUSE WITHOUT WRITTEN CONSENT BY J-U-B WILL BE AT CLIENT'S SOLE RISK AND WITHOUT LIABILITY OR LEGAL EXPOSURE TO J-U-B.

NO.	DESCRIPTION	BY	APP.	DATE
	REVISION			

SPANISH FORK & MAPLETON WRF
SPANISH FORK CITY CORPORATION

30 - MBR PROCESS
UPPER LEVEL POWER AND EQUIPMENT PLAN

FILE:
JUB PROJ. #: 55-20-124
DRAWN BY: TBD
DESIGN BY: KES
CHECKED BY: SK

ONE INCH
AT FULL SIZE. IF NOT ONE INCH, SCALE ACCORDINGLY

LAST UPDATED: 07/08/2022

DRAWING:
30-E-103

SHEET: 642 OF 691

SHEET KEYNOTE

3	MOUNT FIT BELOW PIPE.

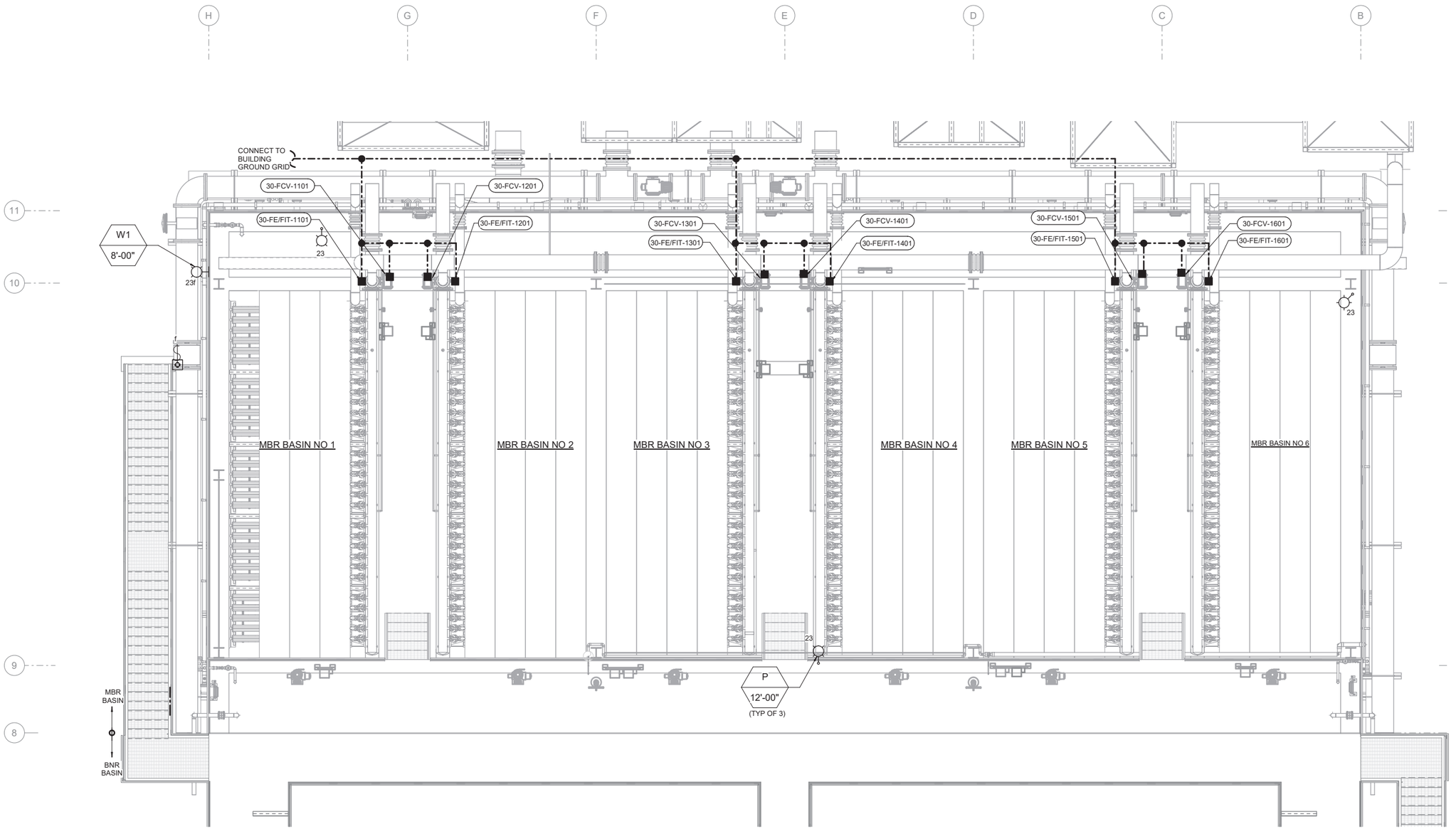

LIGHTING AND GROUNDING PLAN

SCALE: 3/16" = 1'-0"

7/8/2022 5:08:54 PM
BIM 360://Spanish Fork and Mapleton WRF Design/55-20-124_30e-md.rvt

J-U-B ENGINEERS, INC.

J-U-B ENGINEERS, INC.
392. E. Winchester St., Suite 300
Salt Lake City, UT 84107
Phone: 801.547.0393
www.jub.com

Subconsultant:

Stantec

Stantec
2890 E Cottonwood Pkwy
Ste 300
Salt Lake City, UT 84121
Tel: 801.617.3200
www.stantec.com

AGENCY

REVIEW

REUSE OF DRAWINGS

J-U-B SHALL RETAIN ALL COMMON LAW, STATUTORY, COPYRIGHT AND OTHER RESERVED RIGHTS IN THESE DRAWINGS. ALL DRAWINGS, INFORMATION AND DATA SHALL NOT BE REUSED WITHOUT J-U-B'S PRIOR WRITTEN CONSENT. ANY REUSE WITHOUT WRITTEN CONSENT BY J-U-B WILL BE AT CLIENT'S SOLE RISK AND WITHOUT LIABILITY OR LEGAL EXPOSURE TO J-U-B.

NO.	DESCRIPTION	BY	APP'D	DATE
	REVISION			

SPANISH FORK & MAPLETON WRF
SPANISH FORK CITY CORPORATION

30 - MBR PROCESS
LIGHTING AND GROUNDING PLAN

FILE:
JUB PROJ. #: 55-20-124
DRAWN BY: TBD
DESIGN BY: KES
CHECKED BY: SK

ONE INCH
AT FULL SIZE. IF NOT ONE INCH, SCALE ACCORDINGLY

LAST UPDATED: 07/08/2022

DRAWING:
30-E-104

SHEET: 643 OF 691

Plot Date:7/6/2022 5:07 PM Plotted By: Thaksen, Ashish
Date Created:7/6/2022 C:\PW_WORKING\WTRATHAKARE\D0211519\55-20-124-30E-601.DWG

J-U-B ENGINEERS, INC.

J-U-B ENGINEERS, INC.
392. E. Winchester St., Suite 300
Salt Lake City, UT 84107
Phone: 801.547.0393
www.jub.com

Subconsultant:

Stantec
Stantec
2890 E Cottonwood Pkwy
Suite 300, Salt Lake City, Ut
84121
Tel: +1.801.617.3200
www.stantec.com

AGENCY

REVIEW

REUSE OF DRAWINGS
CONTENT MAY BE PROPRIETARY. COPYRIGHT AND OTHER RESERVED RIGHTS OF THESE DRAWINGS, AND THE SAME SHALL NOT BE REUSED WITHOUT J-U-B'S PRIOR WRITTEN CONSENT. ANY REUSE WITHOUT WRITTEN CONSENT BY J-U-B WILL BE AT CLIENTS SOLE RISK AND WITHOUT LIABILITY OR LEGAL EXPOSURE TO J-U-B.

NO.	DESCRIPTION	BY	APP'L	DATE
	REVISION			

SPANISH FORK & MAPLETON WRF
SPANISH FORK CITY CORPORATION

30 - MBR BASINS
CONDUIT DEVELOPMENT - 1

FILE : 55-20-124-30E-601
JUB PROJ. # : 55-20-124
DRAWN BY: KES
DESIGN BY: KES
CHECKED BY: SK

ONE INCH
AT FULL SIZE. IF NOT ONE INCH, SCALE ACCORDINGLY

LAST UPDATED: 7/6/2022

DRAWING:
30-E-601

SHEET: 644 OF 691

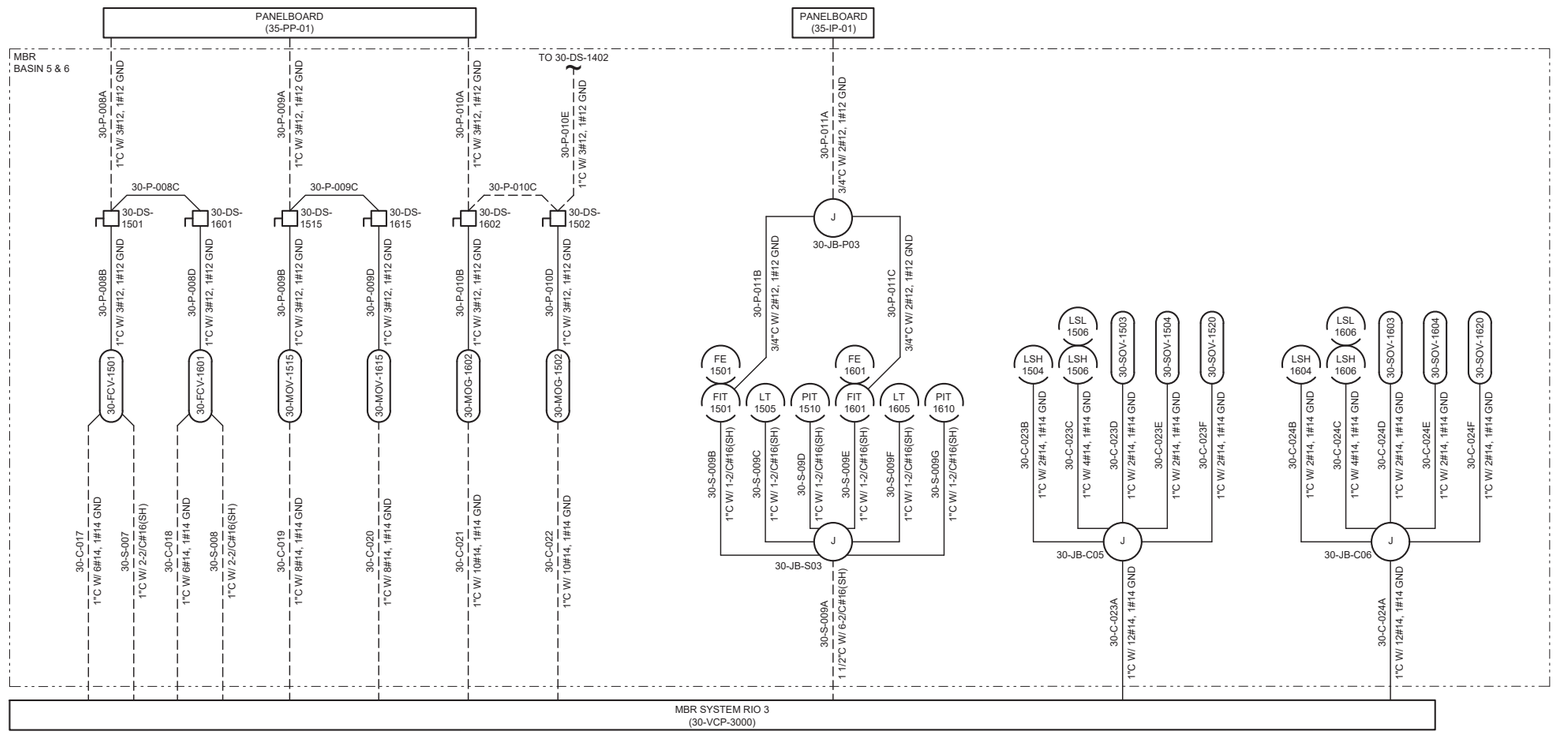

J-U-B ENGINEERS, INC.

J-U-B ENGINEERS, INC.
392. E. Winchester St., Suite 300
Salt Lake City, UT 84107
Phone: 801.547.0393
www.jub.com

Subconsultant:

Stantec

Stantec
2890 E Cottonwood Pkwy
Suite 300, Salt Lake City, Ut
84121
Tel: +1.801.617.3200
www.stantec.com

AGENCY

REVIEW

REUSE OF DRAWINGS
J-U-B SHALL RETAIN ALL COMMON LAW, STATUTORY, COPYRIGHT AND OTHER RESERVED RIGHTS OF THESE DRAWINGS, AND THE SAME SHALL NOT BE REUSED WITHOUT J-U-B'S PRIOR WRITTEN CONSENT. ANY REUSE WITHOUT WRITTEN CONSENT BY J-U-B WILL BE AT CLIENTS SOLE RISK AND WITHOUT LIABILITY TO J-U-B. LEGAL EXPOSURE TO J-U-B.

NO.	DESCRIPTION	BY	APP'L	DATE
	REVISION			

SPANISH FORK & MAPLETON WRF
SPANISH FORK CITY CORPORATION

30 - MBR BASINS
CONDUIT DEVELOPMENT - II

FILE : 55-20-124-30E-602
JUB PROJ. # : 55-20-124
DRAWN BY: KES
DESIGN BY: KES
CHECKED BY: SK

ONE INCH
AT FULL SIZE, IF NOT ONE INCH, SCALE ACCORDINGLY

LAST UPDATED: 7/6/2022

DRAWING:
30-E-602

SHEET: 645 OF 691

Plot Date:7/6/2022 5:58 PM Plotted By: Thakare, Ashish
Date Created:7/6/2022 C:\PW_WORKING\WTR\ATH\AKARE\D0211519\55-20-124-30E-602.DWG

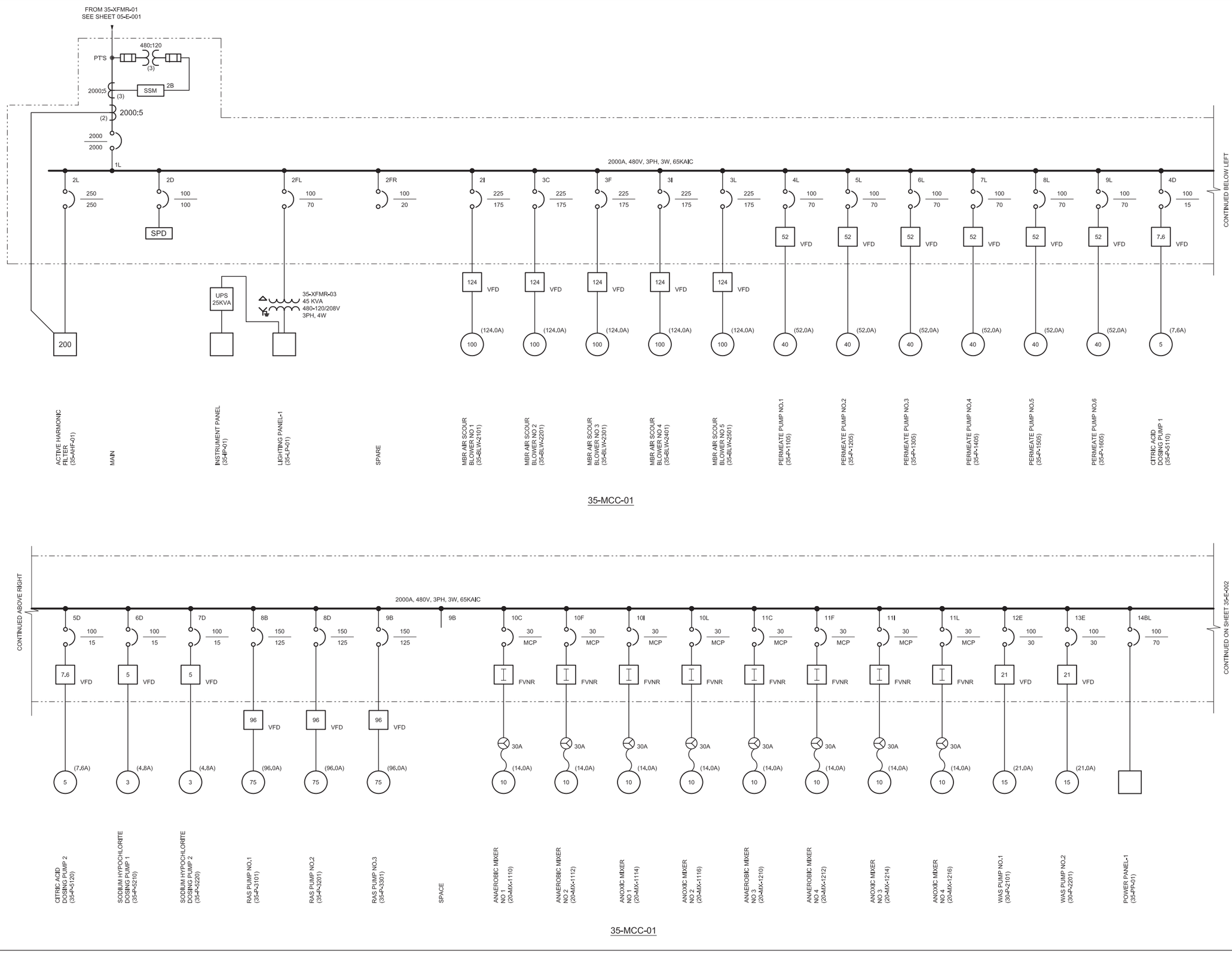

J-U-B ENGINEERS, INC.

J-U-B ENGINEERS, INC.
392 E. Winchester St, Suite 300
Salt Lake City, UT 84107
Phone: 801.547.0393
www.jub.com

Subconsultant:

Stantec
Stantec
2890 E Cottonwood Pkwy
Suite 300, Salt Lake City, Ut
84121
Tel: +1.801.617.3200
www.stantec.com

AGENCY

REVIEW

REUSE OF DRAWINGS
J-U-B SHALL RETAIN ALL COMMON LAW STATUTORY, COPYRIGHT AND OTHER RESERVED RIGHTS OF THESE DRAWINGS, AND THE SAME SHALL NOT BE REUSED WITHOUT J-U-B'S PRIOR WRITTEN CONSENT. ANY REUSE WITHOUT WRITTEN CONSENT BY J-U-B WILL BE AT CLIENTS SOLE RISK AND WITHOUT LIABILITY OR LEGAL EXPOSURE TO J-U-B.

NO.	DESCRIPTION	BY	APPL	DATE
	REVISION			

SPANISH FORK & MAPLETON WRF
SPANISH FORK CITY CORPORATION

35 - MBR SUPPORT BUILDING
SINGLE LINE DIAGRAM - I

FILE: 55-20-124-35E-001
JUB PROJ. #: 55-20-124
DRAWN BY: KES
DESIGN BY: KES
CHECKED BY: SK
ONE INCH
AT FULL SIZE, IF NOT ONE INCH, SCALE ACCORDINGLY
LAST UPDATED: 7/6/2022

DRAWING:
35-E-001

SHEET: 646 OF 691

Plot Date:7/6/2022 5:51 PM, Plotted By:Mulk, Suchita
Date Created:7/6/2022 C:\FW_WORKING\WTR\SMULK\D0202662\55-20-124-35E-001.DWG

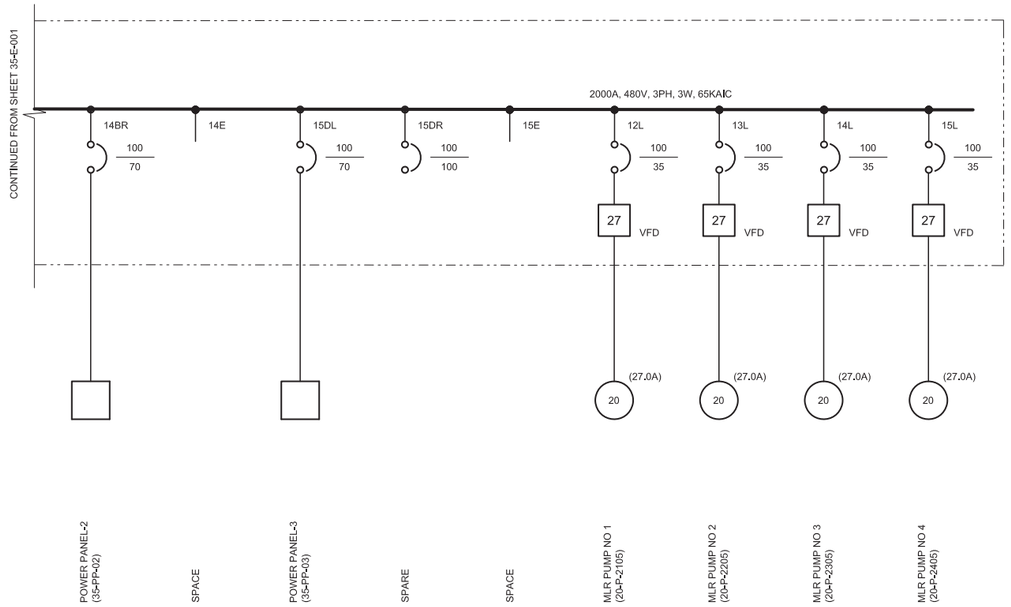

35-MCC-01

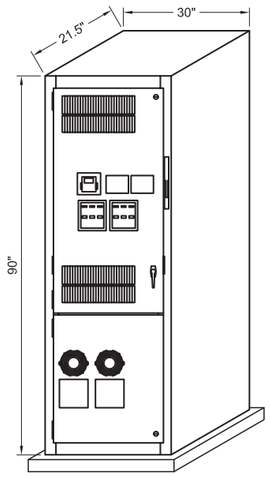

VFD (75 AND 100 HP) ELEVATION

DIMENSIONS BASED ON
EATON "CPX" SERIES VFD

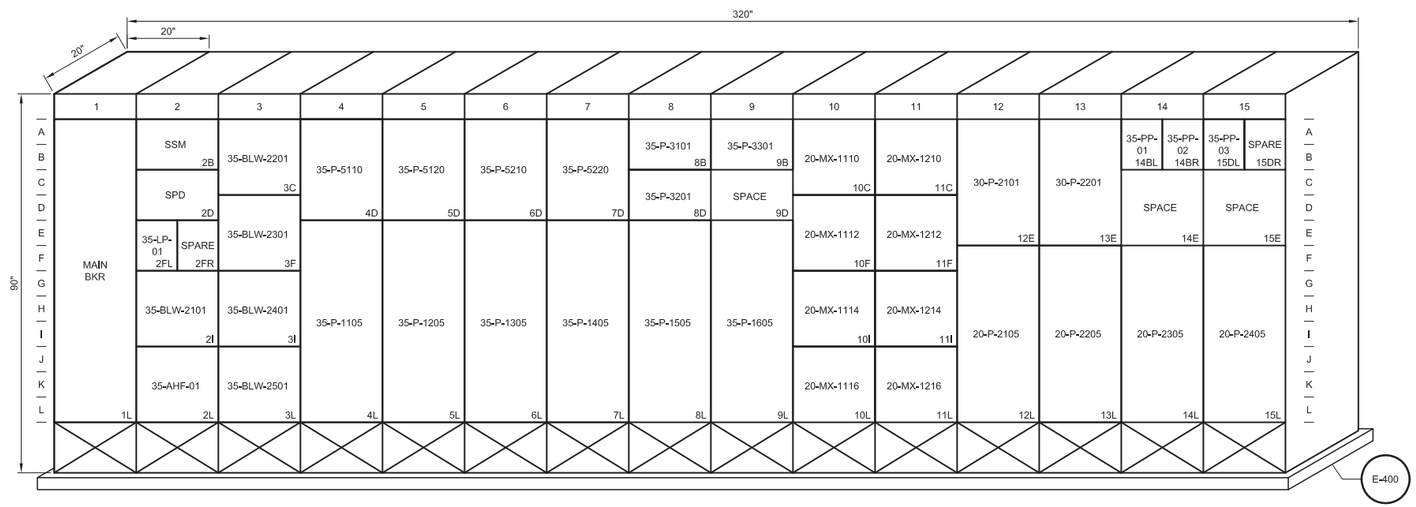

35-MCC-01 ELEVATION

J-U-B ENGINEERS, INC.

J-U-B ENGINEERS, INC.
392 E. Winchester St., Suite 300
Salt Lake City, UT 84107
Phone: 801.547.0393
www.jub.com

Subconsultant:

Stantec

Stantec
2890 E Cottonwood Pkwy
Suite 300, Salt Lake City, Ut
84121
Tel: +1.801.617.3200
www.stantec.com

AGENCY

REVIEW

REUSE OF DRAWINGS
J-U-B SHALL RETAIN ALL COMMON LAW, STATUTORY, COPYRIGHT AND OTHER RESERVED RIGHTS OF THESE DRAWINGS, AND THE SAME SHALL NOT BE REUSED WITHOUT J-U-B'S PRIOR WRITTEN CONSENT. ANY REUSE WITHOUT WRITTEN CONSENT BY J-U-B WILL BE AT CLIENTS SOLE RISK AND WITHOUT LIABILITY OR LEGAL EXPOSURE TO J-U-B.

NO.	DESCRIPTION	BY	APPL.	DATE
	REVISION			

SPANISH FORK & MAPLETON WRF
SPANISH FORK CITY CORPORATION

35 - MBR SUPPORT BUILDING
SINGLE LINE DIAGRAM - II

FILE: 55-20-124-35E-002
JUB PROJ. #: 55-20-124
DRAWN BY: KES
DESIGN BY: KES
CHECKED BY: SK

ONE INCH
AT FULL SIZE. IF NOT ONE INCH, SCALE ACCORDINGLY

LAST UPDATED: 7/6/2022

DRAWING:
35-E-002

SHEET: 647 OF 691

Plot Date: 7/6/2022 5:12 PM Plotted By: Mulk, Suchita
Date Created: 7/6/2022 C:\FW_WORKING\WTR\SMULIK\D0202656\55-20-124-35E-002.DWG

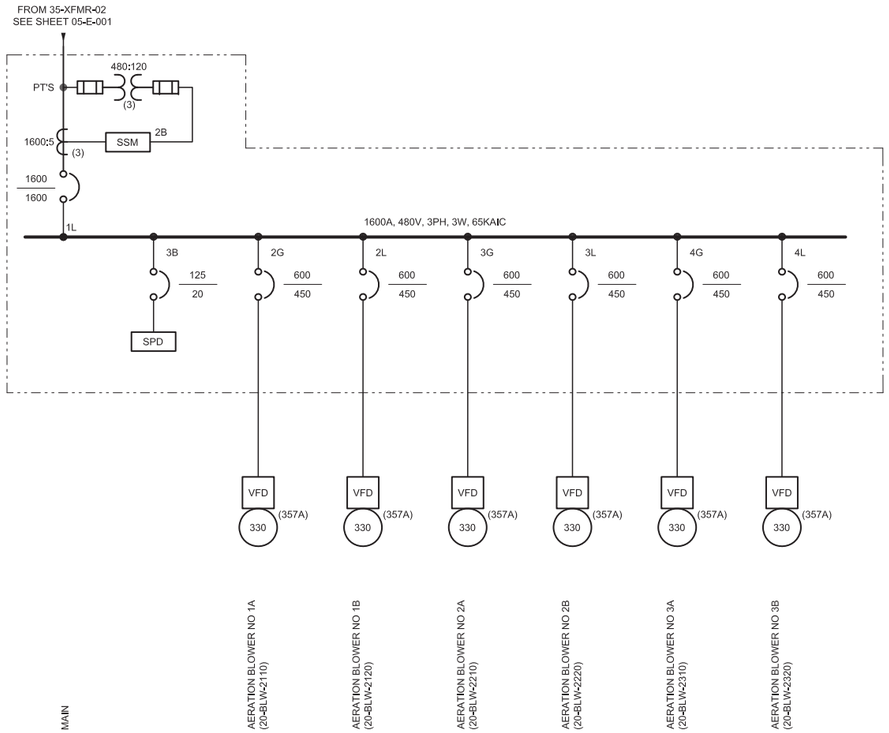

35-MCC-02

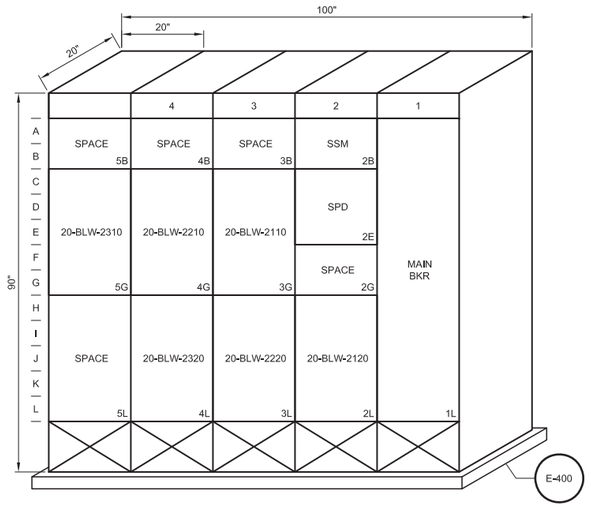

35-MCC-02 ELEVATION

J-U-B ENGINEERS, INC.

J-U-B ENGINEERS, INC.
392 E. Winchester St, Suite 300
Salt Lake City, UT 84107
Phone: 801.547.0393
www.jub.com

Subconsultant:

Stantec

Stantec
2890 E Cottonwood Pkwy
Suite 300, Salt Lake City, Ut
84121
Tel: +1.801.617.3200
www.stantec.com

AGENCY

REVIEW

REUSE OF DRAWINGS
J-U-B SHALL RETAIN ALL COMMON LAW STATUTORY, COPYRIGHT AND OTHER RESERVED RIGHTS OF THESE DRAWINGS, AND THE SAME SHALL NOT BE REUSED WITHOUT J-U-B'S PRIOR WRITTEN CONSENT. ANY REUSE WITHOUT WRITTEN CONSENT BY J-U-B WILL BE AT CLIENTS SOLE RISK AND WITHOUT LIABILITY OR LEGAL EXPOSURE TO J-U-B.

NO.	DESCRIPTION	BY	APPL.	DATE
	REVISION			

SPANISH FORK & MAPLETON WRF
SPANISH FORK CITY CORPORATION

35 - MBR SUPPORT BUILDING
SINGLE LINE DIAGRAM - III

FILE: 55-20-124-35E-003
JUB PROJ. #: 55-20-124
DRAWN BY: KES
DESIGN BY: KES
CHECKED BY: SK

ONE INCH
AT FULL SIZE. IF NOT ONE INCH, SCALE ACCORDINGLY

LAST UPDATED: 7/6/2022

DRAWING:
35-E-003

SHEET: 648 OF 691

Plot Date:7/6/2022 6:13 PM Plotted By: Mulk, Suzhita
Date Created:7/6/2022 C:\PW_WORKING\WTR\SMULIK\D0202066\255-20-124-35E-003.DWG

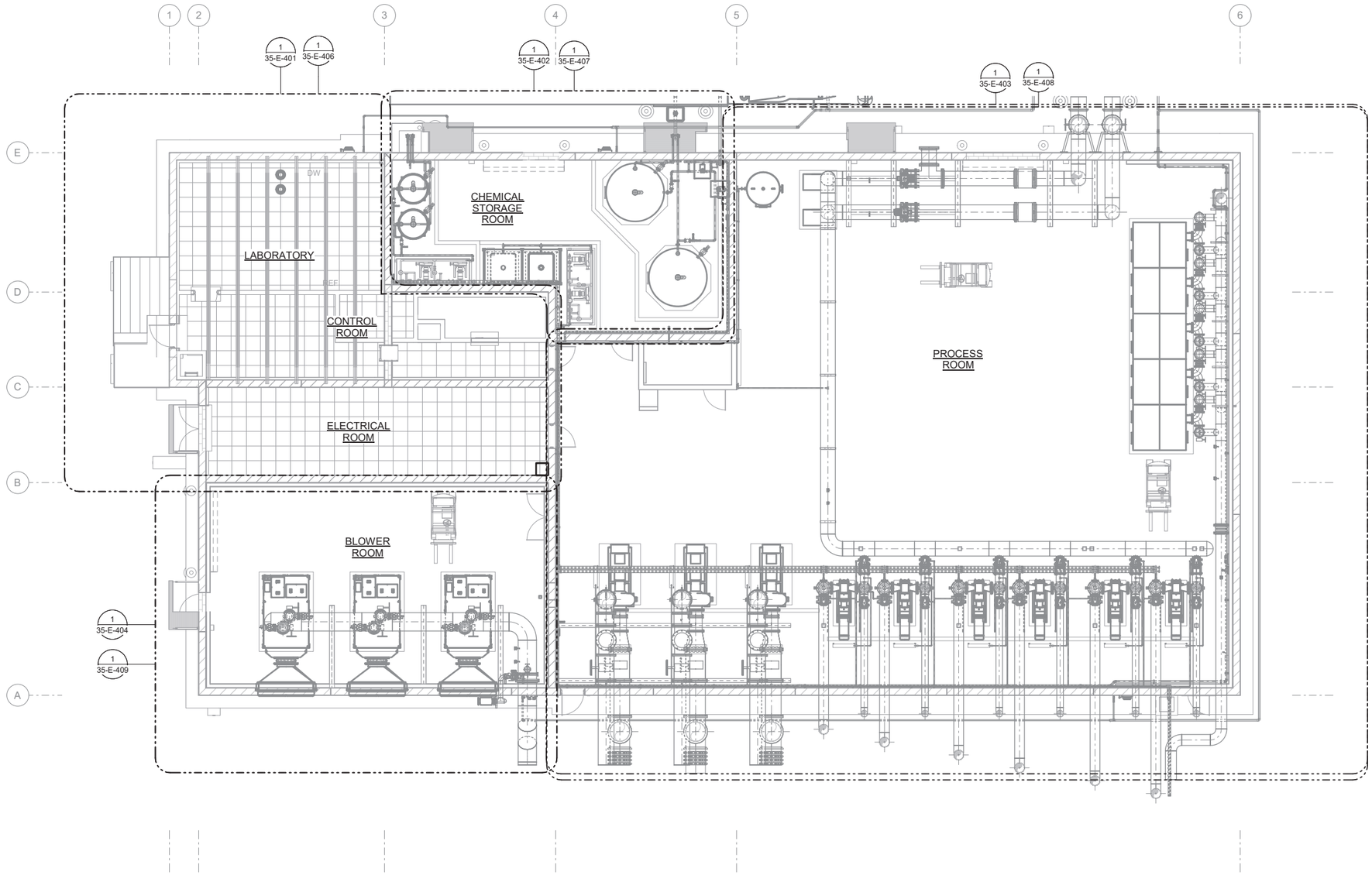

OVERALL ELECTRICAL PLAN

SCALE: 1/8" = 1'-0"

7/8/2022 5:01:35 PM
BIM 360://Spanish Fork and Mapleton WRF Design/55-20-124_35e-md.rvt

J-U-B ENGINEERS, INC.

J-U-B ENGINEERS, INC.
392. E. Winchester St., Suite 300
Salt Lake City, UT 84107
Phone: 801.547.0393
www.jub.com

Subconsultant:

Stantec

Stantec
2890 E Cottonwood Pkwy
Ste 300
Salt Lake City, UT 84121
Tel: 801.617.3200
www.stantec.com

AGENCY

REVIEW

REUSE OF DRAWINGS

J-U-B SHALL RETAIN ALL COMMON LAW, STATUTORY, COPYRIGHT AND OTHER RESERVED RIGHTS IN THE SERVICES PROVIDED. THE DRAWINGS SHALL NOT BE REUSED WITHOUT J-U-B'S PRIOR WRITTEN CONSENT. ANY REUSE WITHOUT WRITTEN CONSENT BY J-U-B WILL BE AT CLIENT'S SOLE RISK AND WITHOUT LIABILITY OR LEGAL EXPOSURE TO J-U-B.

NO.	DESCRIPTION	BY	APP.	DATE
	REVISION			

SPANISH FORK & MAPLETON WRF
SPANISH FORK CITY CORPORATION

35 - MBR SUPPORT BUILDING
OVERALL ELECTRICAL PLAN

FILE:
JUB PROJ. #: 55-20-124
DRAWN BY: TBD
DESIGN BY: KES
CHECKED BY:SK

ONE INCH
AT FULL SIZE, IF NOT ONE INCH, SCALE ACCORDINGLY

LAST UPDATED: 07/08/2022

DRAWING:
35-E-101

SHEET: 649 OF 691

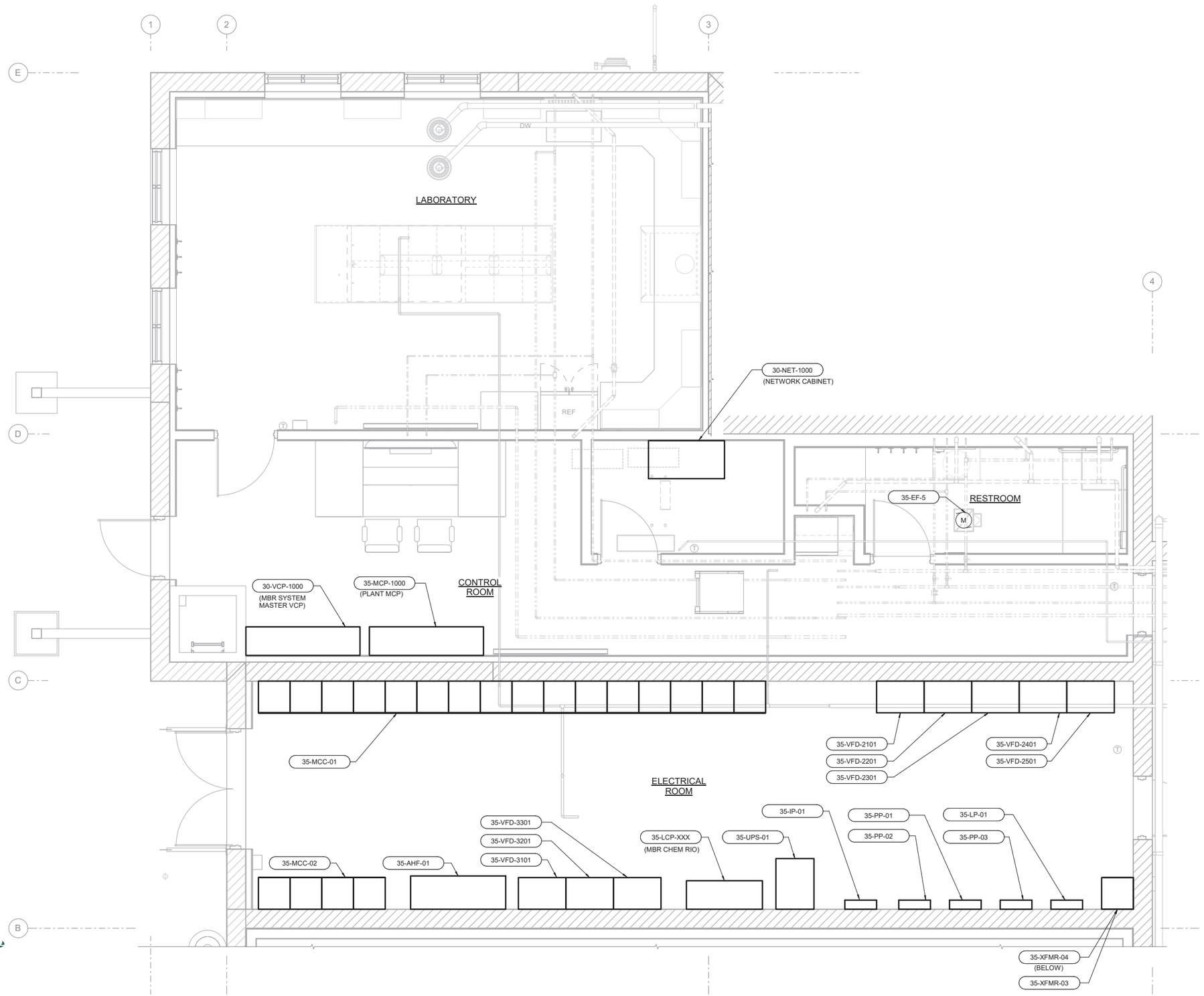

1 35-E-101 POWER PARTIAL PLAN - I

SCALE: 3/8" = 1'-0"

7/8/2022 5:01:41 PM
BIM 360://Spanish Fork and Mapleton WRF Design/55-20-124_35e-md.rvt

J-U-B ENGINEERS, INC.

J-U-B ENGINEERS, INC.
392 E. Winchester St., Suite 300
Salt Lake City, UT 84107
Phone: 801.547.0393
www.jub.com

Subconsultant:

Stantec

Stantec
2890 E Cottonwood Pkwy
Ste 300
Salt Lake City, UT 84121
Tel: 801.617.3200
www.stantec.com

AGENCY

REVIEW

REUSE OF DRAWINGS

J-U-B SHALL RETAIN ALL COMMON LAW, STATUTORY, COPYRIGHT AND OTHER RESERVED RIGHTS IN THESE DRAWINGS AND THEY SHALL NOT BE REUSED WITHOUT J-U-B'S PRIOR WRITTEN CONSENT. ANY REUSE WITHOUT WRITTEN CONSENT BY J-U-B WILL BE AT CLIENT'S SOLE RISK AND WITHOUT LIABILITY OR LEGAL EXPOSURE TO J-U-B.

NO.	DESCRIPTION	BY	APP.	DATE

REVISION

SPANISH FORK & MAPLETON WRF
SPANISH FORK CITY CORPORATION

35 - MBR SUPPORT BUILDING
POWER PARTIAL PLAN - I

FILE:
JUB PROJ. #: 55-20-124
DRAWN BY: TBD
DESIGN BY: KES
CHECKED BY:SK

ONE INCH
AT FULL SIZE. IF NOT ONE INCH, SCALE ACCORDINGLY

LAST UPDATED: 07/08/2022

DRAWING:
35-E-401

SHEET: 650 OF 691

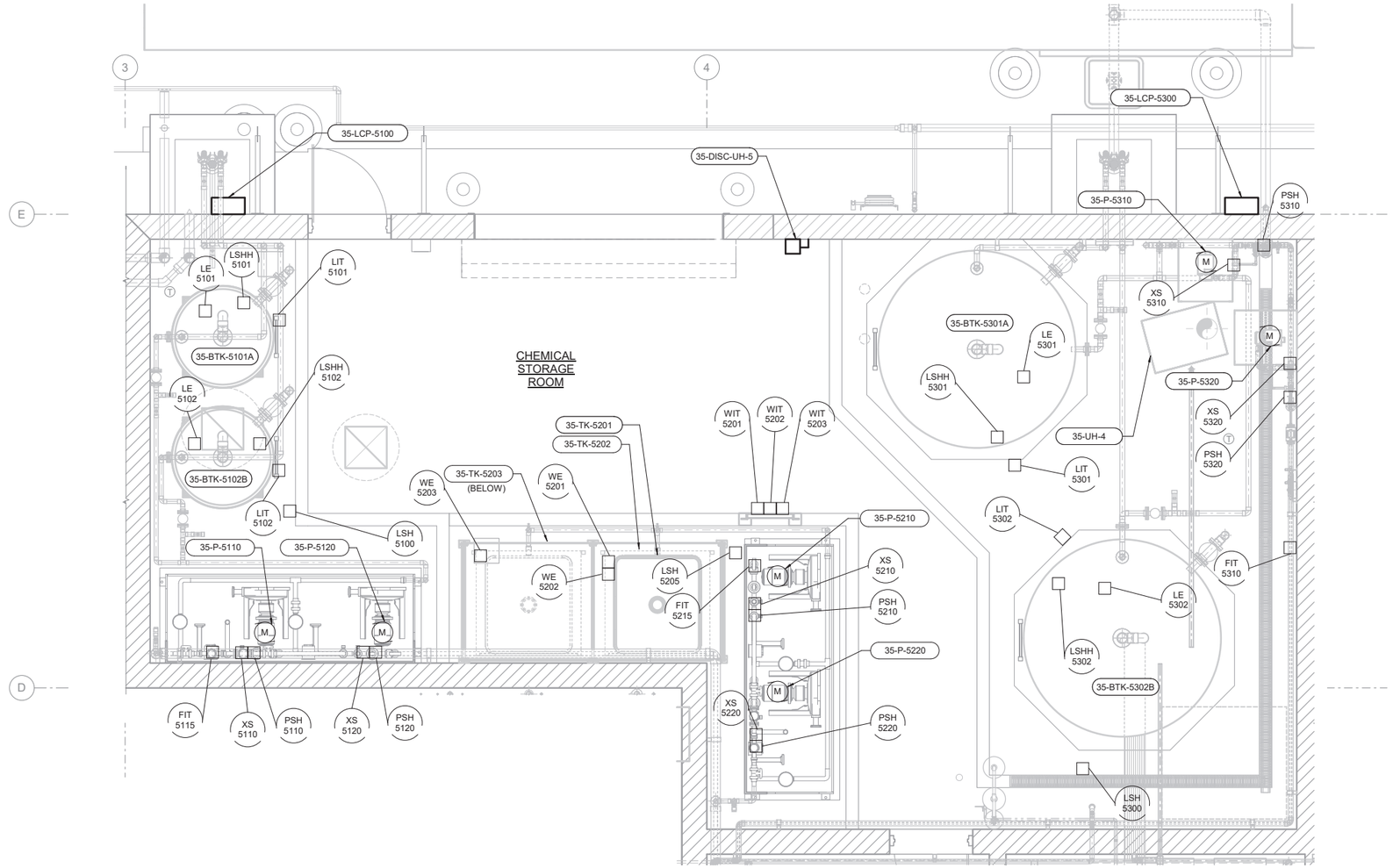

1 / 35-E-101 POWER PARTIAL PLAN - II

SCALE: 3/8" = 1'-0"

7/8/2022 5:02:06 PM
BIM 360://Spanish Fork and Mapleton WRF Design/55-20-124_35e-md.rvt

J-U-B ENGINEERS, INC.

J-U-B ENGINEERS, INC.
392. E. Winchester St., Suite 300
Salt Lake City, UT 84107
Phone: 801.547.0393
www.jub.com

Subconsultant:

Stantec

Stantec
2890 E Cottonwood Pkwy
Ste 300
Salt Lake City, UT 84121
Tel: 801.617.3200
www.stantec.com

AGENCY

REVIEW

REUSE OF DRAWINGS

J-U-B SHALL RETAIN ALL COMMON LAW, STATUTORY, COPYRIGHT AND OTHER RESERVED RIGHTS IN THESE DRAWINGS. DRAWINGS SHALL NOT BE REUSED WITHOUT J-U-B'S PRIOR WRITTEN CONSENT. ANY REUSE WITHOUT WRITTEN CONSENT BY J-U-B WILL BE AT CLIENT'S SOLE RISK AND WITHOUT LIABILITY OR LEGAL EXPOSURE TO J-U-B.

NO.	DESCRIPTION	BY	APP'D	DATE
	REVISION			

SPANISH FORK & MAPLETON WRF
SPANISH FORK CITY CORPORATION

35 - MBR SUPPORT BUILDING
POWER PARTIAL PLAN - II

FILE:
JUB PROJ. #: 55-20-124
DRAWN BY: TBD
DESIGN BY: KES
CHECKED BY: SK

ONE INCH
IF NOT AT FULL SIZE, IF NOT ONE INCH, SCALE ACCORDINGLY

LAST UPDATED: 07/08/2022

DRAWING:
35-E-402

SHEET: 651 OF 691

SHEET KEYNOTE

1	SECTION A TYPICAL FOR EACH PERMEATE PUMP(35-P-1205,35-P-1305,35-P-1405,35-P-1505 AND 35-P-1605).FOR INSTRUMENT TAG REFER TO P&ID'S.

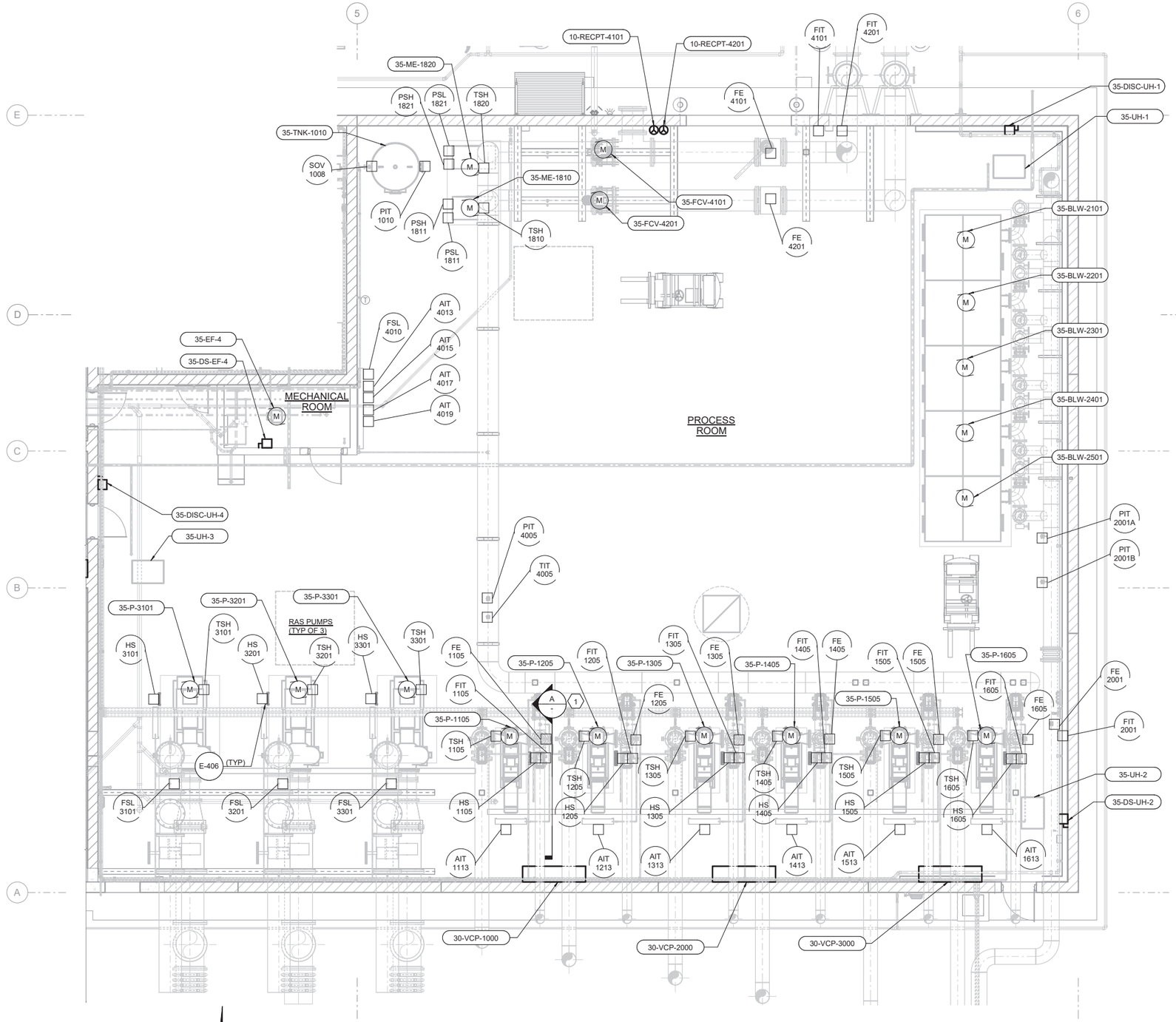

1 35-E-101 POWER PARTIAL PLAN - III

SCALE: 3/16" = 1'-0"

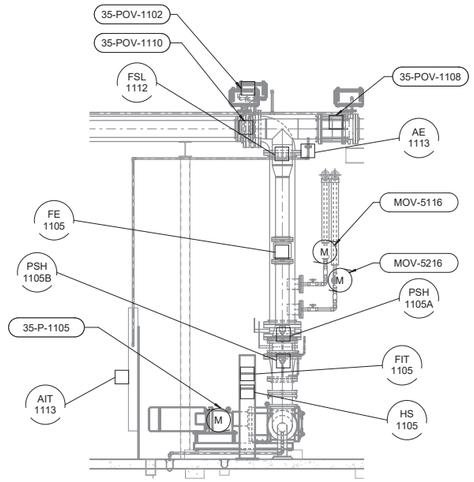

SECTION A

SCALE: 1/4" = 1'-0"

(TYPICAL FOR EACH PERMEATE PUMP) 1

J-U-B ENGINEERS, INC.

J-U-B ENGINEERS, INC.
392. E. Winchester St., Suite 300
Salt Lake City, UT 84107
Phone: 801.547.0393
www.jub.com

Subconsultant:

Stantec

Stantec
2890 E Cottonwood Pkwy
Ste 300
Salt Lake City, UT 84121
Tel: 801.617.3200
www.stantec.com

AGENCY

REVIEW

REUSE OF DRAWINGS

J-U-B SHALL RETAIN ALL COMMON LAW, STATUTORY, COPYRIGHT AND OTHER RESERVED RIGHTS IN THE DRAWINGS. DRAWINGS SHALL NOT BE REUSED WITHOUT J-U-B'S PRIOR WRITTEN CONSENT. ANY REUSE WITHOUT WRITTEN CONSENT BY J-U-B WILL BE AT CLIENT'S SOLE RISK AND WITHOUT LIABILITY OR LEGAL EXPOSURE TO J-U-B.

NO.	DESCRIPTION	BY	APP.	DATE
	REVISION			

SPANISH FORK & MAPLETON WRF
SPANISH FORK CITY CORPORATION

35 - MBR SUPPORT BUILDING
POWER PARTIAL PLAN - III

FILE:
JUB PROJ. #: 55-20-124
DRAWN BY: TBD
DESIGN BY: KES
CHECKED BY:SK

ONE INCH
AT FULL SIZE. IF NOT ONE INCH, SCALE ACCORDINGLY

LAST UPDATED: 07/08/2022

DRAWING:
35-E-403

SHEET: 652 OF 691

7/8/2022 5:02:33 PM
BIM 360://Spanish Fork and Mapleton WRF Design/55-20-124_35e-md.rvt

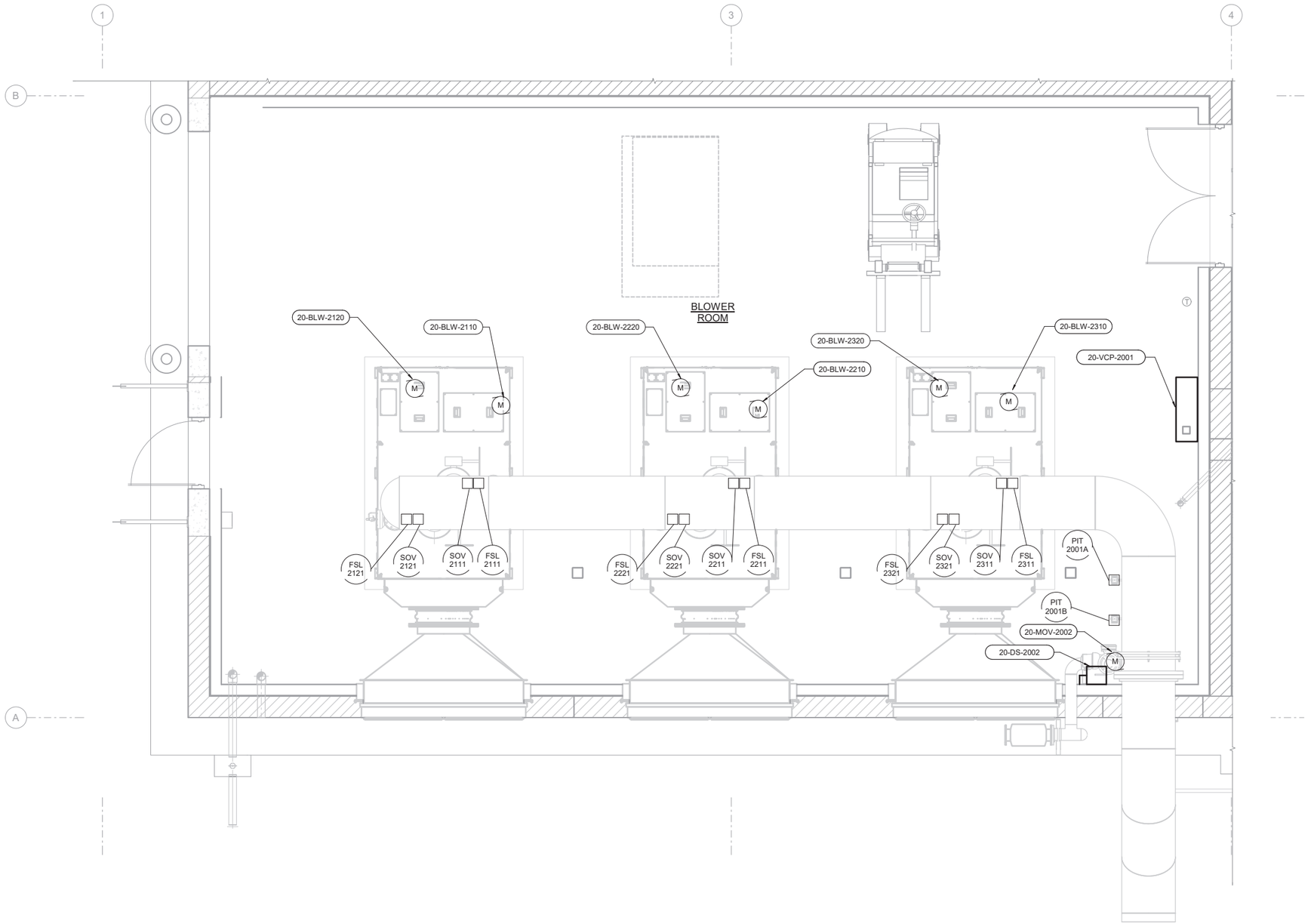

1 35-E-101 POWER PARTIAL PLAN - IV

SCALE: 3/8" = 1'-0"

7/8/2022 5:02:40 PM
BIM 360://Spanish Fork and Mapleton WRF Design\55-20-124_35e-md.rvt

J-U-B ENGINEERS, INC.

J-U-B ENGINEERS, INC.
392. E. Winchester St., Suite 300
Salt Lake City, UT 84107
Phone: 801.547.0393
www.jub.com

Subconsultant:

Stantec

Stantec
2890 E Cottonwood Pkwy
Ste 300
Salt Lake City, UT 84121
Tel: 801.617.3200
www.stantec.com

AGENCY

REVIEW

REUSE OF DRAWINGS

J-U-B SHALL RETAIN ALL COMMON LAW, STATUTORY, COPYRIGHT AND OTHER RESERVED RIGHTS OF ITS DOCUMENTS. DRAWINGS AND SPECIFICATIONS SHALL NOT BE REUSED WITHOUT J-U-B'S PRIOR WRITTEN CONSENT. ANY REUSE WITHOUT WRITTEN CONSENT BY J-U-B WILL BE AT CLIENT'S SOLE RISK AND WITHOUT LIABILITY OR LEGAL EXPOSURE TO J-U-B.

NO.	DESCRIPTION	BY	APP.	DATE

REVISION

SPANISH FORK & MAPLETON WRF
SPANISH FORK CITY CORPORATION

35 - MBR SUPPORT BUILDING
POWER PARTIAL PLAN - IV

FILE:
JUB PROJ. #: 55-20-124
DRAWN BY: TBD
DESIGN BY: KES
CHECKED BY:SK

ONE INCH
AT FULL SIZE, IF NOT ONE INCH, SCALE ACCORDINGLY

LAST UPDATED: 07/08/2022

DRAWING:
35-E-404

SHEET: 653 OF 691

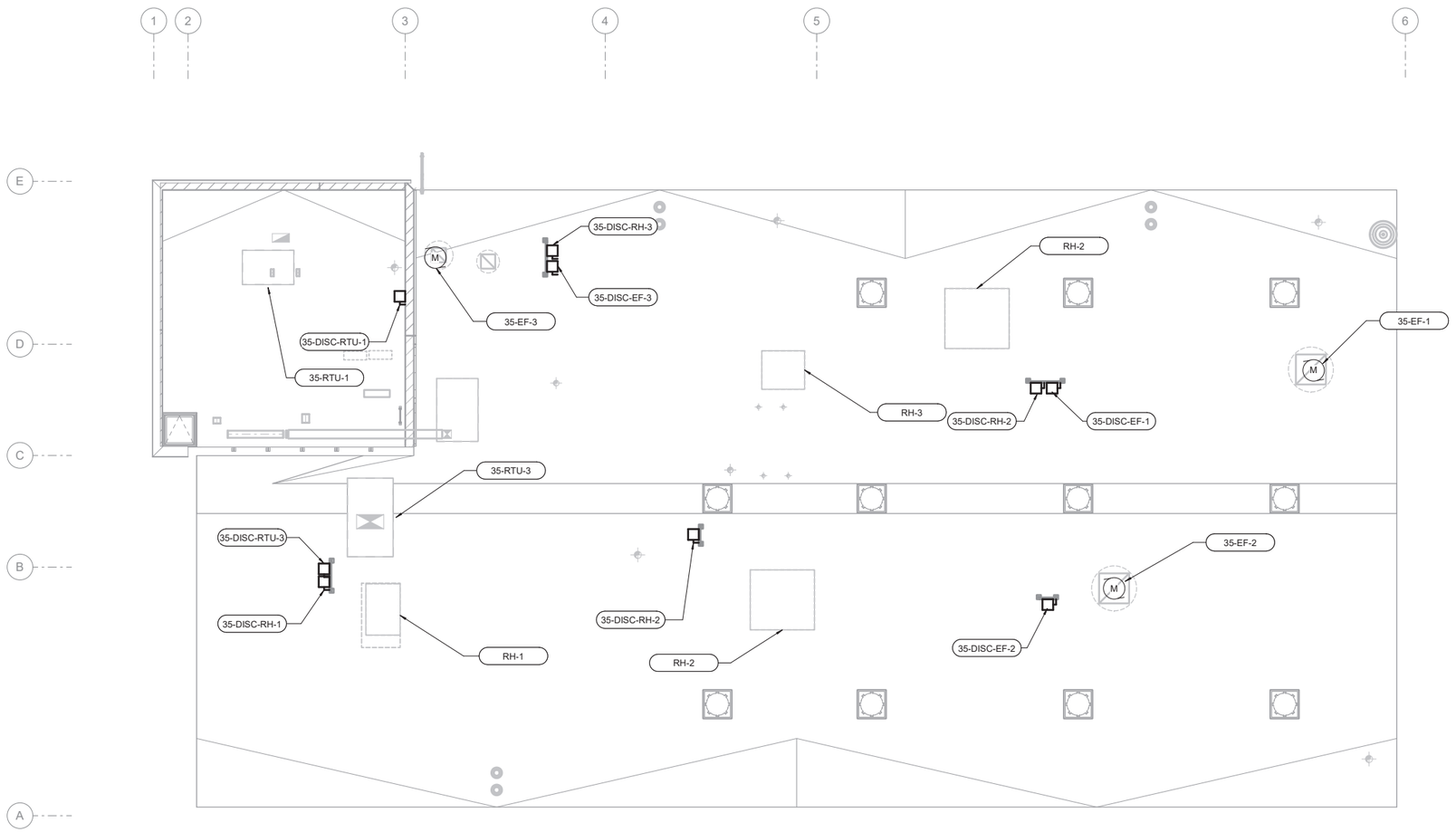

ROOF POWER PLAN

SCALE: 1/8" = 1'-0"

7/8/2022 5:02:41 PM
BIM 360://Spanish Fork and Mapleton WRF Design/55-20-124_35e-md.rvt

J-U-B ENGINEERS, INC.

J-U-B ENGINEERS, INC.
392. E. Winchester St., Suite 300
Salt Lake City, UT 84107
Phone: 801.547.0393
www.jub.com

Subconsultant:

Stantec

Stantec
2890 E Cottonwood Pkwy
Ste 300
Salt Lake City, UT 84121
Tel: 801.617.3200
www.stantec.com

AGENCY

REVIEW

REUSE OF DRAWINGS

J-U-B SHALL RETAIN ALL COMMON LAW, STATUTORY, COPYRIGHT AND OTHER RESERVED RIGHTS IN THESE DRAWINGS AND THEY SHALL NOT BE REUSED WITHOUT J-U-B'S PRIOR WRITTEN CONSENT. ANY REUSE WITHOUT WRITTEN CONSENT BY J-U-B WILL BE AT CLIENT'S SOLE RISK AND WITHOUT LIABILITY OR LEGAL EXPOSURE TO J-U-B.

NO.	DESCRIPTION	BY	APP'I	DATE
	REVISION			

SPANISH FORK & MAPLETON WRF
SPANISH FORK CITY CORPORATION

35 - MBR SUPPORT BUILDING
ROOF POWER PLAN

FILE:
JUB PROJ. #: 55-20-124
DRAWN BY: TBD
DESIGN BY: KES
CHECKED BY: SK

ONE INCH
AT FULL SIZE. IF NOT ONE INCH, SCALE ACCORDINGLY

LAST UPDATED: 07/08/2022

DRAWING:
35-E-405

SHEET: 654 OF 691

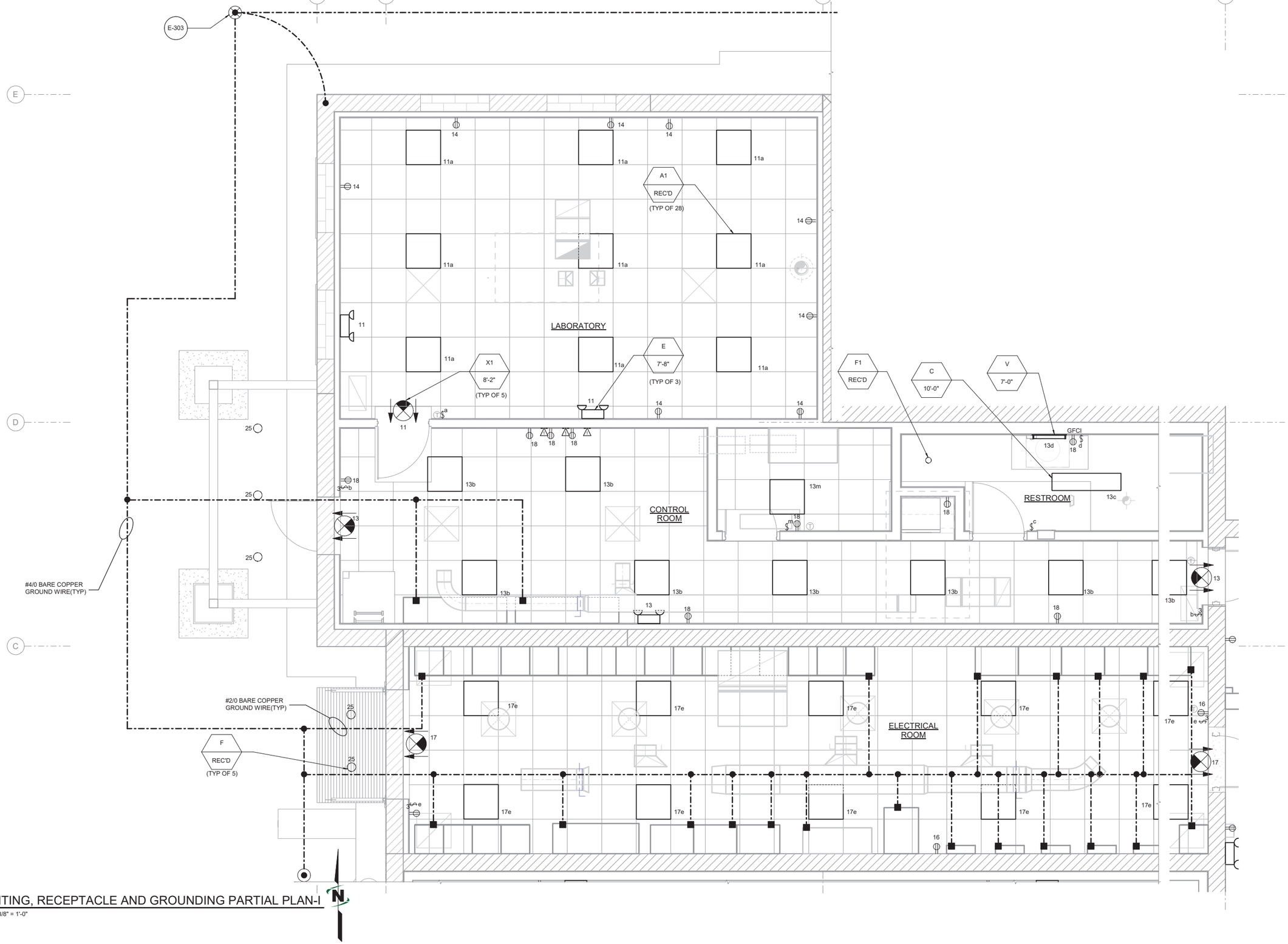

1 35-E-101 LIGHTING, RECEPTACLE AND GROUNDING PARTIAL PLAN-I

SCALE: 3/8" = 1'-0"

7/8/2022 5:02:44 PM
BIM 360://Spanish Fork and Mapleton WRF Design/55-20-124_35e-md.rvt

J-U-B ENGINEERS, INC.

J-U-B ENGINEERS, INC.
392 E. Winchester St., Suite 300
Salt Lake City, UT 84107
Phone: 801.547.0393
www.jub.com

Subconsultant:

Stantec

Stantec
2890 E Cottonwood Pkwy
Ste 300
Salt Lake City, UT 84121
Tel: 801.617.3200
www.stantec.com

AGENCY

REVIEW

REUSE OF DRAWINGS

J-U-B SHALL RETAIN ALL COMMON LAW, STATUTORY, COPYRIGHT AND OTHER RESERVED RIGHTS IN THESE DRAWINGS AND THEY SHALL NOT BE REUSED WITHOUT J-U-B'S PRIOR WRITTEN CONSENT. ANY REUSE WITHOUT WRITTEN CONSENT BY J-U-B WILL BE AT CLIENT'S SOLE RISK AND WITHOUT LIABILITY OR LEGAL EXPOSURE TO J-U-B.

NO.	DESCRIPTION	BY	APP.	DATE

REVISION

SPANISH FORK & MAPLETON WRF
SPANISH FORK CITY CORPORATION

35 - MBR SUPPORT BUILDING
LIGHTING, RECEPTACLE AND GROUNDING PARTIAL PLAN - I

FILE:	
JUB PROJ. #:	55-20-124
DRAWN BY:	TBD
DESIGN BY:	KES
CHECKED BY:	SK

ONE INCH
AT FULL SIZE. IF NOT ONE INCH, SCALE ACCORDINGLY

LAST UPDATED: 07/08/2022

DRAWING:
35-E-406

SHEET: 655 OF 691

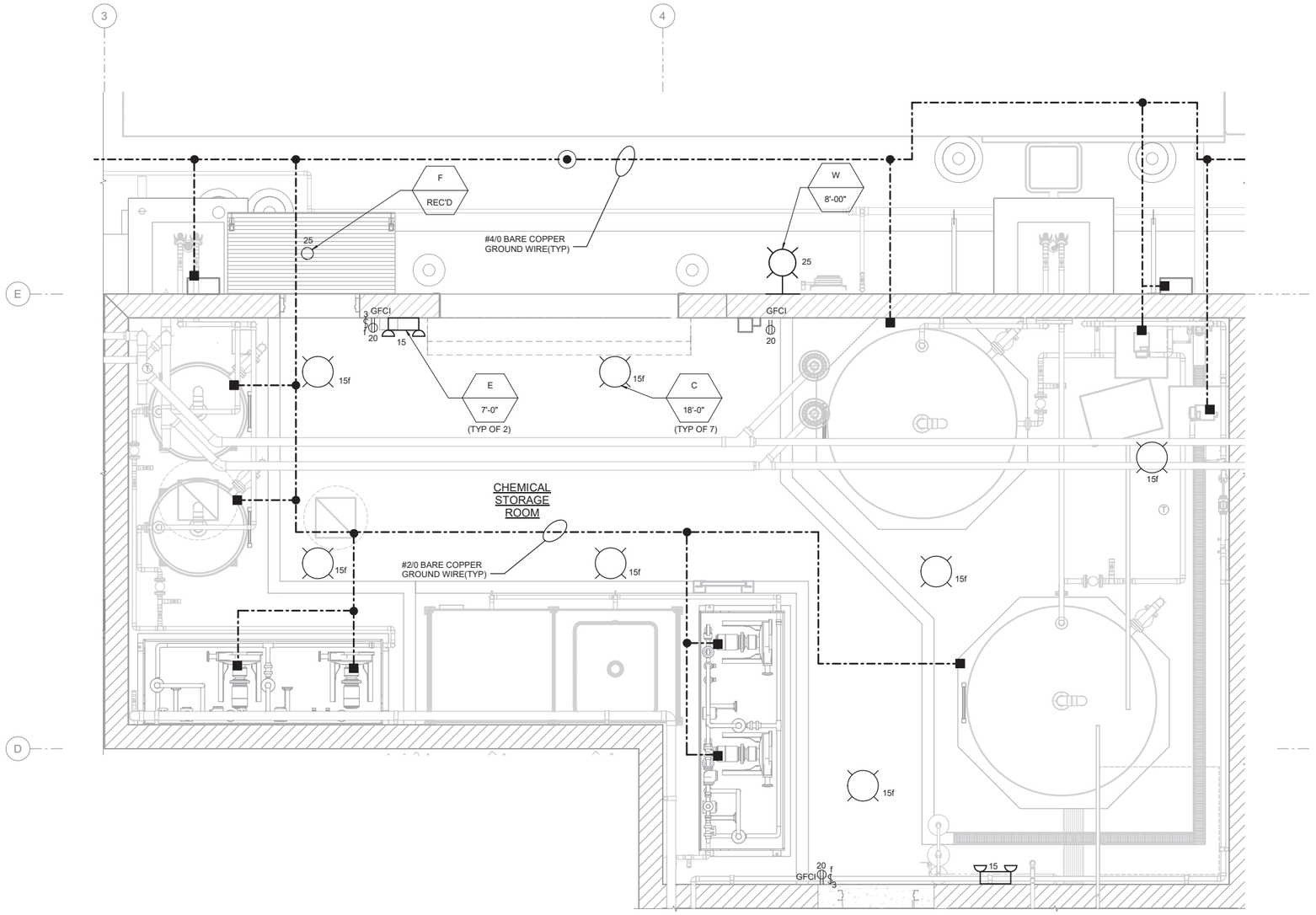

1 / 35-E-101 LIGHTING, RECEPTACLE AND GROUNDING PARTIAL PLAN - II

SCALE: 3/8" = 1'-0"

7/8/2022 5:02:54 PM
BIM 360://Spanish Fork and Mapleton WRF Design/55-20-124_35e-md.rvt

J-U-B ENGINEERS, INC.

J-U-B ENGINEERS, INC.
392. E. Winchester St., Suite 300
Salt Lake City, UT 84107
Phone: 801.547.0393
www.jub.com

Subconsultant:

Stantec

Stantec
2890 E Cottonwood Pkwy
Ste 300
Salt Lake City, UT 84121
Tel: 801.617.3200
www.stantec.com

AGENCY

REVIEW

REUSE OF DRAWINGS

J-U-B SHALL RETAIN ALL COMMON LAW, STATUTORY, COPYRIGHT AND OTHER RESERVED RIGHTS IN THE DRAWINGS, SPECIFICATIONS, AND OTHER DOCUMENTS PREPARED BY J-U-B. ALL SUCH DOCUMENTS SHALL NOT BE REUSED WITHOUT J-U-B'S PRIOR WRITTEN CONSENT. ANY REUSE WITHOUT WRITTEN CONSENT BY J-U-B WILL BE AT CLIENT'S SOLE RISK AND WITHOUT LIABILITY OR LEGAL EXPOSURE TO J-U-B.

NO.	DESCRIPTION	BY	APP'D	DATE
	REVISION			

SPANISH FORK & MAPLETON WRF
SPANISH FORK CITY CORPORATION

35 - MBR SUPPORT BUILDING
LIGHTING, RECEPTACLE AND GROUNDING PARTIAL PLAN - II

FILE:
JUB PROJ. #: 55-20-124
DRAWN BY: TBD
DESIGN BY: KES
CHECKED BY:SK
ONE INCH
AT FULL SIZE, IF NOT ONE INCH, SCALE ACCORDINGLY
LAST UPDATED: 07/08/2022

DRAWING:
35-E-407

SHEET: 656 OF 691

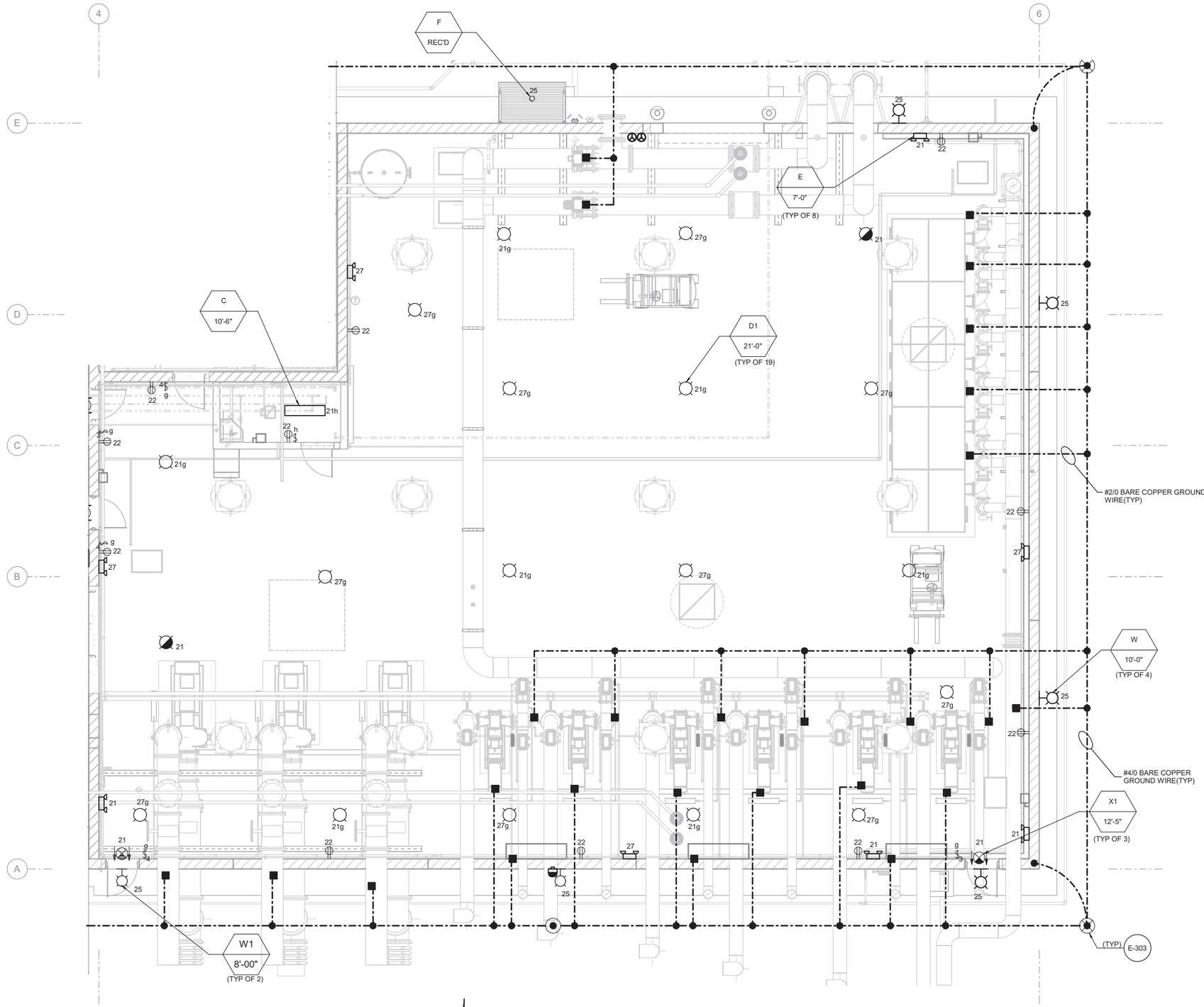

1 35-E-101 LIGHTING, RECEPTACLE AND GROUNDING PARTIAL PLAN - III

SCALE: 3/16" = 1'-0"

7/8/2022 5:03:01 PM
BIM 360://Spanish Fork and Mapleton WRF Design\55-20-124_35e-md.rvt

J-U-B ENGINEERS, INC.

J-U-B ENGINEERS, INC.
392 E. Winchester St., Suite 300
Salt Lake City, UT 84107
Phone: 801.547.0393
www.jub.com

Subconsultant:

Stantec
Stantec
2890 E Cottonwood Pkwy
Ste 300
Salt Lake City, UT 84121
Tel: 801.617.3200
www.stantec.com

AGENCY

REVIEW

REUSE OF DRAWINGS

J-U-B SHALL RETAIN ALL COMMON LAW, STATUTORY, COPYRIGHT AND OTHER RESERVED RIGHTS IN THESE DRAWINGS. THESE DRAWINGS SHALL NOT BE REUSED WITHOUT J-U-B'S PRIOR WRITTEN CONSENT. ANY REUSE WITHOUT WRITTEN CONSENT BY J-U-B WILL BE AT CLIENT'S SOLE RISK AND WITHOUT LIABILITY OR LEGAL EXPOSURE TO J-U-B.

NO.	DESCRIPTION	BY	APP.	DATE
	REVISION			

SPANISH FORK & MAPLETON WRF
SPANISH FORK CITY CORPORATION

35 - MBR SUPPORT BUILDING
LIGHTING, RECEPTACLE AND GROUNDING PARTIAL PLAN - III

FILE:
JUB PROJ. #: 55-20-124
DRAWN BY: TBD
DESIGN BY: KES
CHECKED BY:SK

ONE INCH
AT FULL SIZE. IF NOT ONE INCH, SCALE ACCORDINGLY

LAST UPDATED: 07/08/2022

DRAWING:
35-E-408

SHEET: 657 OF 691

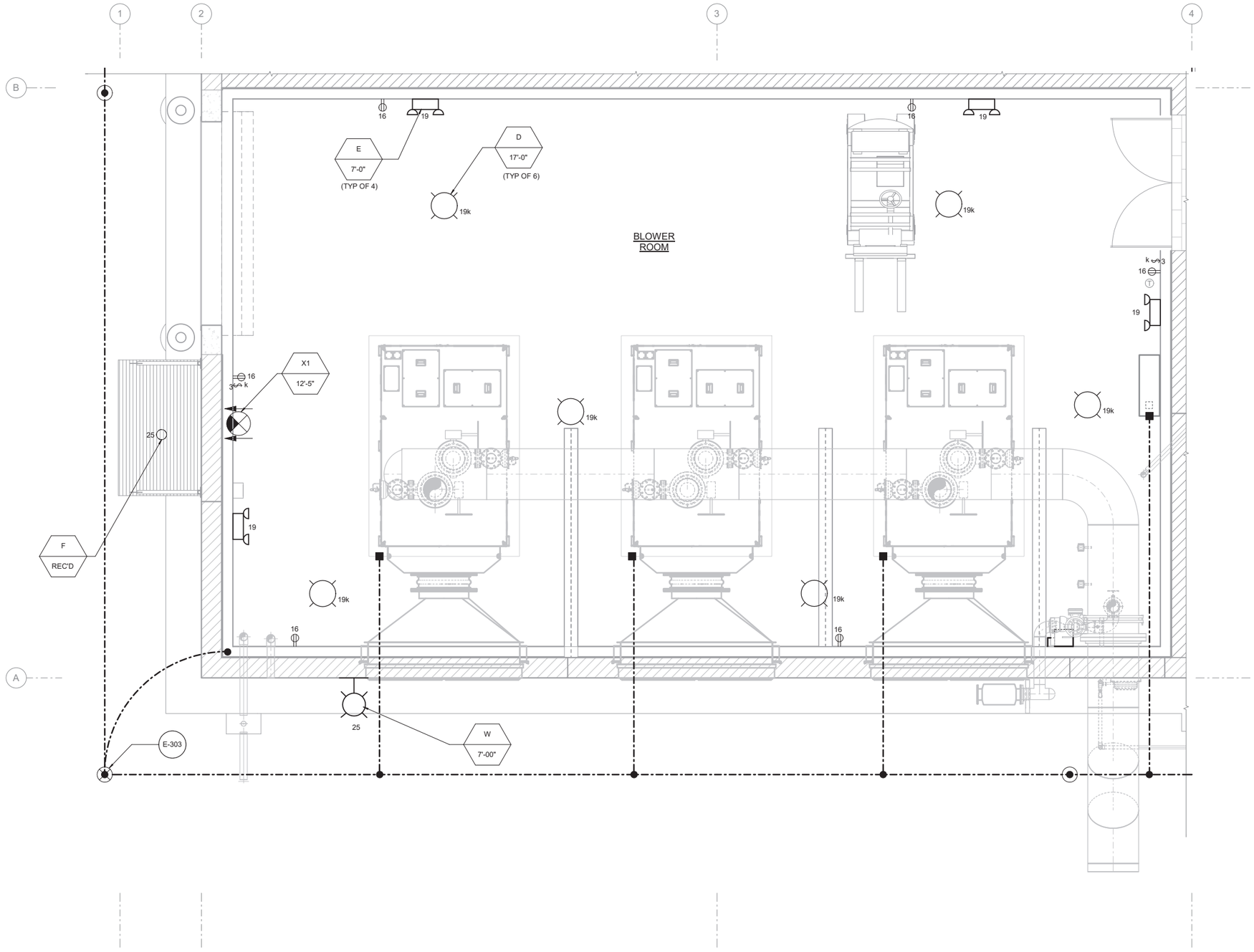

1 35-E-101 LIGHTING, RECEPTACLE AND GROUNDING PARTIAL PLAN - IV

SCALE: 3/8" = 1'-0"

J-U-B ENGINEERS, INC.

J-U-B ENGINEERS, INC.
392. E. Winchester St., Suite 300
Salt Lake City, UT 84107
Phone: 801.547.0393
www.jub.com

Subconsultant:

Stantec

Stantec
2890 E Cottonwood Pkwy
Ste 300
Salt Lake City, UT 84121
Tel: 801.617.3200
www.stantec.com

AGENCY

REVIEW

REUSE OF DRAWINGS

J-U-B SHALL RETAIN ALL COMMON LAW, STATUTORY, COPYRIGHT AND OTHER RESERVED RIGHTS IN THESE DRAWINGS. SUCH DRAWINGS SHALL NOT BE REUSED WITHOUT J-U-B'S PRIOR WRITTEN CONSENT. ANY REUSE WITHOUT WRITTEN CONSENT BY J-U-B WILL BE AT CLIENT'S SOLE RISK AND WITHOUT LIABILITY OR LEGAL EXPOSURE TO J-U-B.

NO.	DESCRIPTION	BY	APP.	DATE
	REVISION			

SPANISH FORK & MAPLETON WRF
SPANISH FORK CITY CORPORATION

35 - MBR SUPPORT BUILDING
LIGHTING, RECEPTACLE AND GROUNDING PARTIAL PLAN - IV

FILE:
JUB PROJ. #: 55-20-124
DRAWN BY: TBD
DESIGN BY: KES
CHECKED BY: SK
ONE INCH
AT FULL SIZE. IF NOT ONE INCH, SCALE ACCORDINGLY
LAST UPDATED: 07/08/2022

DRAWING:
35-E-409

SHEET: 658 OF 691

7/8/2022 5:03:12 PM
BIM 360://Spanish Fork and Mapleton WRF Design/55-20-124_35e-md.rvt

J-U-B ENGINEERS, INC.

J-U-B ENGINEERS, INC.
392 E. Winchester St, Suite 300
Salt Lake City, UT 84107
Phone: 801.547.0393
www.jub.com

Subconsultant:

Stantec
Stantec
2890 E Cottonwood Pkwy
Suite 300, Salt Lake City, UT
84121
Tel: +1.801.617.3200
www.stantec.com

AGENCY

REVIEW

REUSE OF DRAWINGS
J-U-B SHALL RETAIN ALL COMMON LAW STATUTORY, COPYRIGHT AND OTHER RESERVED RIGHTS OF THESE DRAWINGS, AND THE SAME SHALL NOT BE REUSED WITHOUT J-U-B'S PRIOR WRITTEN CONSENT. ANY REUSE WITHOUT WRITTEN CONSENT BY J-U-B WILL BE AT CLIENTS SOLE RISK AND WITHOUT LIABILITY OR LEGAL EXPOSURE TO J-U-B.

NO.	DESCRIPTION	BY	APPD.	DATE
	REVISION			

SPANISH FORK & MAPLETON WRF
SPANISH FORK CITY CORPORATION

35 - MBR SUPPORT BUILDING CONDUIT DEVELOPMENT - I

FILE: 55-20-124-35E-601
JUB PROJ. #: 55-20-124
DRAWN BY: KES
DESIGN BY: KES
CHECKED BY: SK
ONE INCH
AT FULL SIZE. IF NOT ONE INCH, SCALE ACCORDINGLY
LAST UPDATED: 7/6/2022

DRAWING:
35-E-601

SHEET: 659 OF 691

Plot Date:7/6/2022 6:14 PM Plotted By: Mulik, Suchita
Date Created:6/7/2022 C:\PW_WORKING\WTFRSMULIK\D0202662\55-20-124-35E-601.DWG

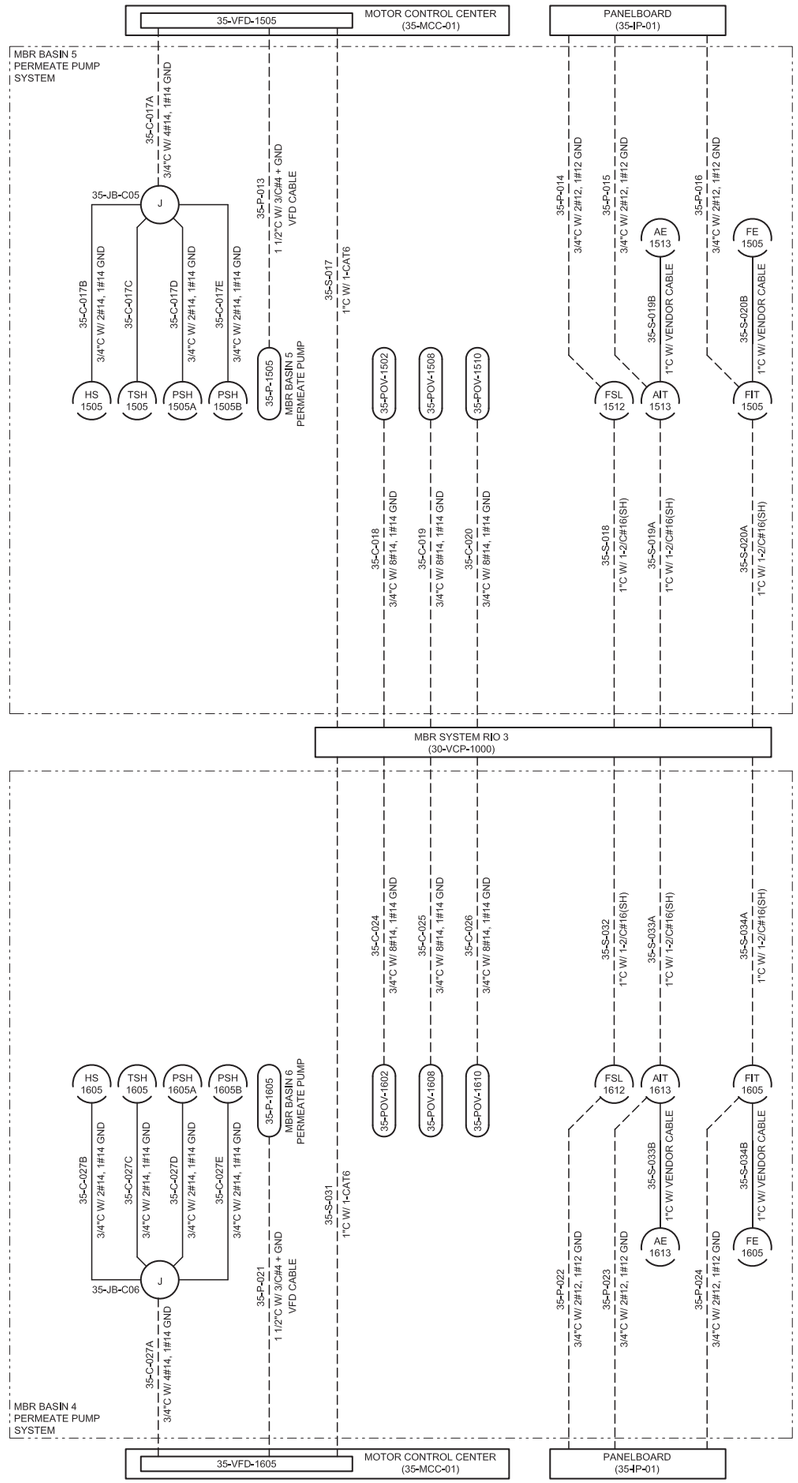

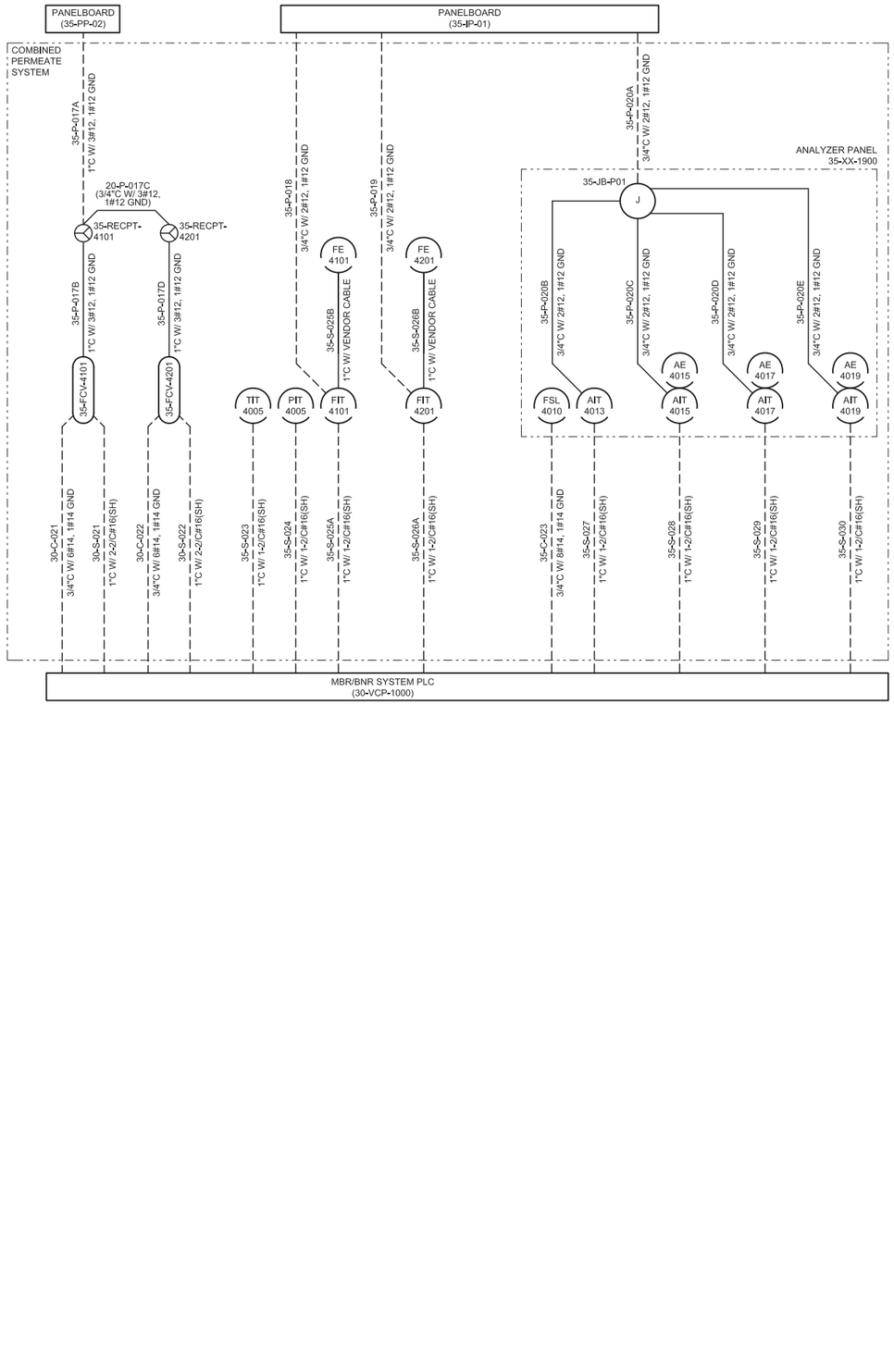

J-U-B ENGINEERS, INC.

J-U-B ENGINEERS, INC.
392 E. Winchester St, Suite 300
Salt Lake City, UT 84107
Phone: 801.547.0393
www.jub.com

Subconsultant:

Stantec
Stantec
2890 E Cottonwood Pkwy
Suite 300, Salt Lake City, UT
84121
Tel: +1.801.617.3200
www.stantec.com

AGENCY

REVIEW

REUSE OF DRAWINGS
J-U-B SHALL RETAIN ALL COMMON LAW STATUTORY, COPYRIGHT AND OTHER RESERVED RIGHTS OF THESE DRAWINGS, AND THE SAME SHALL NOT BE REUSED WITHOUT J-U-B'S PRIOR WRITTEN CONSENT. ANY REUSE WITHOUT WRITTEN CONSENT BY J-U-B WILL BE AT CLIENTS SOLE RISK AND WITHOUT LIABILITY OR LEGAL EXPOSURE TO J-U-B.

NO.	DESCRIPTION	BY	APPD.	DATE
	REVISION			

SPANISH FORK & MAPLETON WRF
SPANISH FORK CITY CORPORATION

35 - MBR SUPPORT BUILDING
CONDUIT DEVELOPMENT - II

FILE: 55-20-124-35E-602
JUB PROJ. #: 55-20-124
DRAWN BY: KES
DESIGN BY: KES
CHECKED BY: SK
ONE INCH
AT FULL SIZE, IF NOT ONE INCH, SCALE ACCORDINGLY
LAST UPDATED: 7/6/2022

DRAWING:
35-E-602

SHEET: 660 OF 691

Plot Date/Time: 7/6/2022 6:15 PM Plotted By: Malik Suzhita
Date Created: 7/6/2022 C:\PW_WORKING\WTR\SMULIK\D0200566\55-20-124-35E-602.DWG

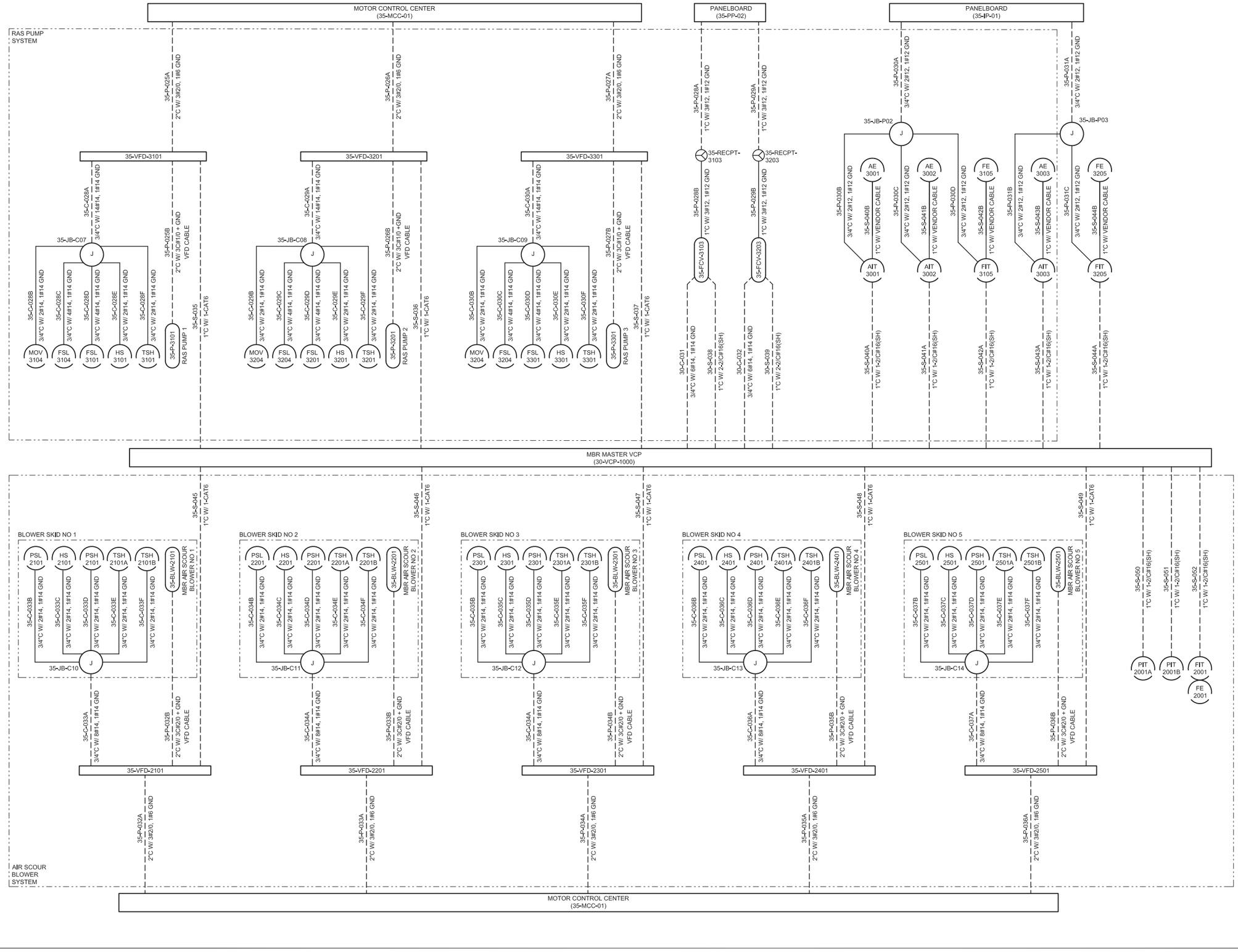

Plot Date=7/6/2022 6:17 PM Plotted By=Mulk, Suchita
Date Created=7/6/2022 C:\PW_WORKING\WTFS\MULIK\D0202662\55-20-124-35E-603.DWG

J-U-B ENGINEERS, INC.

J-U-B ENGINEERS, INC.
392 E. Winchester St, Suite 300
Salt Lake City, UT 84107
Phone: 801.547.0393
www.jub.com

Subconsultant:

Stantec

Stantec
2890 E Cottonwood Pkwy
Suite 300, Salt Lake City, UT
84121
Tel: +1.801.617.3200
www.stantec.com

AGENCY

REVIEW

REUSE OF DRAWINGS:
J-U-B SHALL RETAIN ALL COMMON LAW, STATUTORY, COPYRIGHT AND OTHER RESERVED RIGHTS OF THESE DRAWINGS, AND THE SAME SHALL NOT BE REUSED WITHOUT J-U-B'S PRIOR WRITTEN CONSENT. ANY REUSE WITHOUT WRITTEN CONSENT BY J-U-B WILL BE AT CLIENT'S SOLE RISK AND WITHOUT LIABILITY OR LEGAL EXPOSURE TO J-U-B.

NO.	DESCRIPTION	BY	APPD.	DATE
	REVISION			

SPANISH FORK & MAPLETON WRF
SPANISH FORK CITY CORPORATION

35 - MBR SUPPORT BUILDING
CONDUIT DEVELOPMENT - III

FILE: 55-20-124-35E-603
JUB PROJ. #: 155-20-124
DRAWN BY: KES
DESIGN BY: KES
CHECKED BY: SK
ONE INCH
AT FULL SIZE. IF NOT ONE INCH, SCALE ACCORDINGLY
LAST UPDATED: 7/6/2022

DRAWING:
35-E-603

SHEET: 661 OF 691

J-U-B ENGINEERS, INC.

J-U-B ENGINEERS, INC.
392 E. Winchester St., Suite 300
Salt Lake City, UT 84107
Phone: 801.547.0393
www.jub.com

Subconsultant:

Stantec
Stantec
2890 E Cottonwood Pkwy
Suite 300, Salt Lake City, UT
84121
Tel: +1.801.617.3200
www.stantec.com

AGENCY

REVIEW

REUSE OF DRAWINGS:
J-U-B SHALL RETAIN ALL COMMON LAW, STATUTORY, COPYRIGHT AND OTHER RESERVED RIGHTS OF THESE DRAWINGS, AND THE SAME SHALL NOT BE REUSED WITHOUT J-U-B'S PRIOR WRITTEN CONSENT. ANY REUSE WITHOUT WRITTEN CONSENT BY J-U-B WILL BE AT CLIENTS SOLE RISK AND WITHOUT LIABILITY OR LEGAL EXPOSURE TO J-U-B.

NO.	DESCRIPTION	BY	APPL.	DATE
	REVISION			

SPANISH FORK & MAPLETON WRF
SPANISH FORK CITY CORPORATION

35 - MBR SUPPORT BUILDING
CONDUIT DEVELOPMENT - IV

FILE: 55-20-124-35E-604
JUB PROJ. # : 55-20-124
DRAWN BY: KES
DESIGN BY: KES
CHECKED BY: SK
ONE INCH
AT FULL SIZE. IF NOT ONE INCH, SCALE ACCORDINGLY
LAST UPDATED: 7/6/2022

DRAWING:
35-E-604

SHEET: 662 OF 691

Plot Date=7/6/2022 5:21 PM Plotted By: Mulk, Suchita
Date Created=7/6/2022 C:\PW_WORKING\WTP\SM\MULK\D0202062\55-20-124-35E-604.DWG

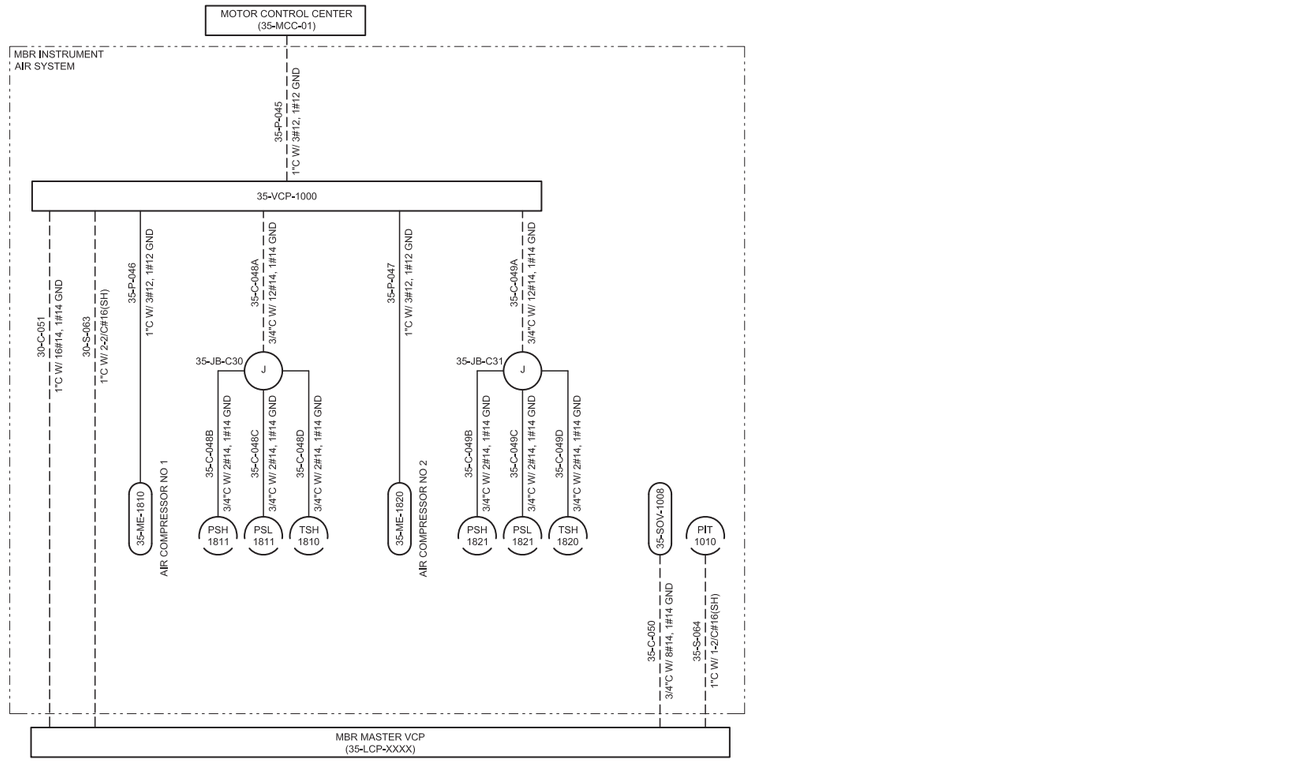

J-U-B ENGINEERS, INC.

J-U-B ENGINEERS, INC.
392 E. Winchester St., Suite 300
Salt Lake City, UT 84107
Phone: 801.547.0393
www.jub.com

Subconsultant:

Stantec
2890 E Cottonwood Pkwy
Suite 300, Salt Lake City, UT
84121
Tel: +1.801.617.3200
www.stantec.com

AGENCY

REVIEW

REUSE OF DRAWINGS
J-U-B SHALL RETAIN ALL COMMON LAW STATUTORY, COPYRIGHT AND OTHER RESERVED RIGHTS OF THESE DRAWINGS, AND THE SAME SHALL NOT BE REUSED WITHOUT J-U-B'S PRIOR WRITTEN CONSENT. ANY REUSE WITHOUT WRITTEN CONSENT BY J-U-B WILL BE AT CLIENTS SOLE RISK AND WITHOUT LIABILITY OR LEGAL EXPOSURE TO J-U-B.

NO.	DESCRIPTION	BY	APPR.	DATE
	REVISION			

SPANISH FORK & MAPLETON WRF
SPANISH FORK CITY CORPORATION

35 - MBR SUPPORT BUILDING
CONDUIT DEVELOPMENT - V

FILE: 55-20-124-35E-605
JUB PROJ. #: 55-20-124
DRAWN BY: KES
DESIGN BY: KES
CHECKED BY: SK
ONE INCH
AT FULL SIZE, IF NOT ONE INCH, SCALE ACCORDINGLY
LAST UPDATED: 7/6/2022

DRAWING:
35-E-605

SHEET: 663 OF 691

Plot Date:7/6/2022 8:23 PM Plotted By: Mulik, Suchita
Date Created:7/6/2022 C:\FW_WORKING\WTR\SMULIK\D0020682\55-20-124-35E-605.DWG

PANELBOARD: 35-LP-01 **BUS AMPS:** 175 **VOLTS:** 208/120V
LOCATION: MBR ELECTRICAL ROOM **MAIN BKR AMPS:** 200 **PHASE:** 3
MOUNTING: WALL **WIRE:** 4

LOAD DESCRIPTION	KVA A	KVA B	KVA C	CKT CTO	BKR INT		BKR INT	CKT CTO	KVA A	KVA B	KVA C	LOAD DESCRIPTION
35-LCP-5100	0.0			1	20			2	8.33			
35-LCP-5300		0.0		3	20		30/3P	4		8.33		35-UPS-01
35-MOV-5116, 35-MOV-5216			0.0	5	20			6			8.33	
35-MOV-5126, 35-MOV-5226	0.0			7	20		20	8	0.0			35-MOV-5146, 35-MOV-5246
35-MOV-5136, 35-MOV-5236		0.0		9	20		20	10		0.0		35-MOV-5156, 35-MOV-5256
LAB LTS			0.25	11	20		20	12			0.0	35-MOV-5166, 35-MOV-5266
CNT RM	0.32			13	20		20	14	1.44			LAB RCPTS
CHEM RM LTS		0.91		15	20		20	16		1.62		ELEC/BLWR RM RCPTS
ELEC RM LTS			0.37	17	20		20	18			1.44	CNTL RM RCPTS
BLWR RM LTS	0.78			19	20		20	20	0.54			CHEM RM RCPTS
PROCESS RM LTS		1.24		21	20		20	22		1.98		PROCESS RM RCPTS
BNR/MBR BASIN LTS			0.73	23	20		20	24			0.0	BNR/MBR BASINR CPTS
EXTERIOR BLDG LTS	0.45			25	20		20	26	0.0			BNR/MBR BASINR CPTS
PROCESS RM LTS		1.3		27	20		20	28		0.0		EXTERIOR BLDG RCPTS
SITE LIGHT			0.04	29	20		20	30			0.0	SPARE
SPARE	0.0			31	20		20	32	0.0			SPARE
SPACE		0.0		33	-		-	34		0.0		SPACE
SPACE			0.0	35	-		-	36			0.0	SPACE
SPACE	0.0			37	-		-	38	0.0			SPACE
SPACE		0.0		39	-		-	40		0.0		SPACE
SPACE			0.0	41	-		-	42			0.0	SPACE
	1.55	3.46	1.39	TOTAL					10.31	11.93	9.77	
	PHASE LOAD			TOTAL LOAD								
	11.86	15.39	11.16	38.4	KVA		106.5	AMPS				

PANELBOARD: 35-IP-01 **BUS AMPS:** 125 **VOLTS:** 208/120V
LOCATION: MBR ELECTRICAL ROOM **MAIN BKR AMPS:** 100 **PHASE:** 3
MOUNTING: WALL **WIRE:** 4

LOAD DESCRIPTION	KVA A	KVA B	KVA C	CKT CTO	BKR INT	BKR INT	CKT CTO	KVA A	KVA B	KVA C	LOAD DESCRIPTION
20-AIT-1118, 20-AIT-1119, 20-AIT-1120, 20-LIT-1125	1.0			1	20	20	2	2.0			MBR/BNR PLC (35-LCP-1000)
20-AIT-1218, 20-AIT-1219, 20-AIT-1220, 20-LIT-1225		1.0		3	20	20	4		0.5		MST BLW VCP (20-VCP-2001)
20-FIT-2004, 20-FIT-2006			0.5	5	20	20	6			1.1	MBR RIO 1 (30-VCP-1000)
20-FIT-2111, 20-AIT-1113, 20-AIT-1117	0.75			7	20	20	8	1.1			MBR RIO 2 (30-VCP-2000)
20-FIT-2211, 20-AIT-1213, 20-AIT-1217		0.75		9	20	20	10		1.1		MBR RIO 3 (30-VCP-3000)
20-FIT-2502, 20-FIT-2512, 20-FIT-2522			0.75	11	20	20	12			2.0	MBR MST VCP (30-VCP-4000)
20-FIT-2602, 20-FIT-2612, 20-FIT-2622	0.75			13	20	20	14	0.0			SPARE
30-LIT-2109, 30-FIT-2107		0.5		15	20	20	16		0.0		SPARE
30-FIT-2107			0.25	17	20	20	18			0.0	SPARE
35-AIT-1902, 35-AIT-1903, 35-AIT-1904	0.75			19	20	20	20	0.0			SPARE
35-AIT-3001, 35-AIT-3002, 35-FIT-3105		0.75		21	20	20	22		0.0		SPARE
35-AIT-3003, 35-FIT-3205			0.5	23	20	20	24			0.0	SPARE
35-FIT-1101, 35-FIT-1201	0.5			25	20	20	26	0.0			SPARE
35-FSL-1112, 35-AIT-1113		0.5		27	20	20	28		0.0		SPARE
35-FSL-1212, 35-AIT-1213			0.5	29	20	20	30			0.0	SPARE
35-FSL-1312, 35-AIT-1313	0.5			31	20	20	32	0.0			SPARE
35-FSL-1412, 35-AIT-1413		0.5		33	20	20	34		0.0		SPARE
35-FSL-1512, 35-AIT-1513			0.5	35	20	20	36			0.0	SPARE
35-FSL-1612, 35-AIT-1613	0.5			37	20	20	38	0.0			SPARE
SPARE		0.0		39	20	20	40		0.0		SPARE
SPARE			0.0	41	20	20	42			0.0	SPARE
	4.25	4.0	3.0	TOTAL				3.1	1.6	3.1	
	PHASE LOAD			TOTAL LOAD							
	7.35	5.6	6.1	19.1	KVA		52.8	AMPS			

PANELBOARD: 35-PP-01 **BUS AMPS:** 200 **VOLTS:** 480 V
LOCATION: SPT BLDG ELECTRICAL ROOM **MAIN BKR AMPS:** 100 **PHASE:** 3
MOUNTING: WALL **WIRE:** 3

LOAD DESCRIPTION	KVA A	KVA B	KVA C	CKT CTO	BKR INT	BKR INT	CKT CTO	KVA A	KVA B	KVA C	LOAD DESCRIPTION
20-FCV-2502, 20-FCV-2512, 20-FCV-2522	0.5			1			2	0.5			
		0.5		3	20/3P	20/3P	4		0.5		30-FCV-1101, 30-FCV-1201
			0.5	5			6			0.5	
20-FCV-2602, 20-FCV-2612, 20-FCV-6522	0.5			7			8	0.5			
		0.5		9	20/3P	20/3P	10		0.5		30-MOG-1102, 30-MOG-1202
			0.5	11			12			0.5	
20-MOG-1001, 20-MOG-1002	0.5			13			14	0.5			
		0.5		15	20/3P	20/3P	16		0.5		30-POV-1115, 30-POV-1215
			0.5	17			18			0.5	
20-MOV-2002	0.5			19			20	0.5			
		0.5		21	20/3P	20/3P	22		0.5		30-FCV-1301, 30-FCV-1401
			0.5	23			24			0.5	
20-FCV-2003	0.5			25			26	0.5			
		0.5		27	20/3P	20/3P	28		0.5		30-MOG-1302, 30-MOG-1402
			0.5	29			30			0.5	
20-FCV-2005	0.5			31			32	0.5			
		0.5		33	20/3P	20/3P	34		0.5		30-POV-1315, 30-POV-1415
			0.5	35			36			0.5	
SPARE	0.0			37			38	0.0			
		0.0		39	20/3P	20/3P	40		0.0		
			0.0	41			42			0.0	
	3.0	3.0	3.0	TOTAL				3.0	3.0	3.0	
	PHASE LOAD			TOTAL LOAD							
	6.0	6.0	6.0	18.0	KVA		21.6	AMPS			

PANELBOARD: 35-PP-02 **BUS AMPS:** 200 **VOLTS:** 480 V
LOCATION: SPT BLDG ELECTRICAL ROOM **MAIN BKR AMPS:** 100 **PHASE:** 3
MOUNTING: WALL **WIRE:** 3

LOAD DESCRIPTION	KVA A	KVA B	KVA C	CKT CTO	BKR INT	BKR INT	CKT CTO	KVA A	KVA B	KVA C	LOAD DESCRIPTION
30-FCV-1501, 30-FCV-1601	0.5			1			2	0.5			
		0.5		3	20/3P	20/3P	4		0.5		35-P-5320
			0.5	5			6			0.5	
30-MOG-1502, 30-MOG-1602	0.5			7			8	0.5			
		0.5		9	20/3P	20/3P	10		0.5		35-P-5310
			0.5	11			12			0.5	
30-POV-1515, 30-POV-1615	0.5			13			14	0.0			
		0.5		15	20/3P	20/3P	16		0.0		SPARE
			0.5	17			18			0.0	
35-FCV-1101, 35-FCV-1101	0.5			19			20	0.0			
		0.5		21	20/3P	20/3P	22		0.0		SPARE
			0.5	23			24			0.0	
35-FCV-3103	0.5			25			26	0.0			
		0.5		27	20/3P	20/3P	28		0.0		SPARE
			0.5	29			30			0.0	
35-FCV-3203	0.5			31			32	0.0			
		0.5		33	20/3P	20/3P	34		0.0		SPARE
			0.5	35			36			0.0	
SPARE	0.0			37			38	0.0			
		0.0		39	20/3P	20/3P	40		0.0		SPARE
			0.0	41			42			0.0	
	3.0	3.0	3.0	TOTAL				1.0	1.0	1.0	
	PHASE LOAD			TOTAL LOAD							
	4.0	4.0	4.0	12.0	KVA		14.4	AMPS			

J-U-B ENGINEERS, INC.
J-U-B ENGINEERS, INC.
392. E. Winchester St., Suite 300
Salt Lake City, UT 84107
Phone: 801.547.0393
www.jub.com

Subconsultant:
Stantec
Stantec
2890 E Cottonwood Pkwy
Suite 300, Salt Lake City, Ut 84121
Tel: +1.801.617.3200
www.stantec.com

AGENCY

REVIEW

REUSE OF DRAWINGS
J-U-B SHALL RETAIN ALL COMMON LAW, STATUTORY, COPYRIGHT AND OTHER RESERVED RIGHTS OF THESE DRAWINGS, AND THE SAME SHALL NOT BE REUSED WITHOUT J-U-B'S PRIOR WRITTEN CONSENT. ANY REUSE WITHOUT WRITTEN CONSENT BY J-U-B WILL BE AT CLIENTS SOLE RISK AND WITHOUT LIABILITY OR LEGAL EXPOSURE TO J-U-B.

NO.	DESCRIPTION	BY	APP'D	DATE
	REVISION			
35-E-610				

SPANISH FORK & MAPLETON WRF
SPANISH FORK CITY CORPORATION

35 - MBR SUPPORT BUILDING
PANEL SCHEDULES - I

FILE : 55-20-124-35E-610
JUB PROJ. # : 55-20-124
DRAWN BY: KES
DESIGN BY: KES
CHECKED BY: SK
ONE INCH
AT FULL SIZE, IF NOT ONE INCH, SCALE ACCORDINGLY
LAST UPDATED: 7/6/2022

DRAWING:
35-E-610

SHEET: 664 OF 691

Plot Date:7/6/2022 6:13 PM Plotted By: Dadas, Telashree
Date Created:7/6/2022 C:\FW_WORKING\WTR\TIDADAS\D02026\2\55-20-124-35E-610.DWG

PANELBOARD: 35-PP-03 **BUS AMPS:** 200 **VOLTS:** 480 V

LOCATION: SPT BLDG ELECTRICAL ROOM **MAIN BKR AMPS:** 100 **PHASE:** 3

MOUNTING: WALL **WIRE:** 3

LOAD DESCRIPTION	KVA A	KVA B	KVA C	CKT CTO	BKR INT		BKR INT	CKT CTO	KVA A	KVA B	KVA C	LOAD DESCRIPTION
35-UH-01	1.0			1	20/3P		20/3P	2	2.2			35-RTU-01
		1.0		3				4		2.2		
			1.0	5				6			2.2	
35-UH-02	1.0			7	20/3P		20/3P	8	3.6			35-RTU-02
		1.0		9				10		3.6		
			1.0	11				12			3.6	
35-UH-03	1.0			13	20/3P		20/3P	14	0.4			35-EF-01
		1.0		15				16		0.4		
			1.0	17				18			0.4	
35-UH-04	1.0			19	20/3P		20/3P	20	0.3			35-EF-02
		1.0		21				22		0.3		
			1.0	23				24			0.3	
SPARE	0.5			25	20/3P		20/3P	26	0.0			SPARE
		0.5		27				28		0.0		
			0.5	29				30			0.0	
SPARE	0.0			31	20/3P		20/3P	32	0.0			SPARE
		0.0		33				34		0.0		
			0.0	35				36			0.0	
SPARE	0.0			37	20/3P		20/3P	38	0.0			SPARE
		0.0		39				40		0.0		
			0.0	41				42			0.0	
	4.5	4.5	4.5	TOTAL					6.5	6.5	6.5	
	PHASE LOAD			TOTAL LOAD								
	11.0	11.0	11.0	33.0	KVA		39.7	AMPS				

J-U-B ENGINEERS, INC.

J-U-B ENGINEERS, INC.
392. E. Winchester St., Suite 300
Salt Lake City, UT 84107
Phone: 801.547.0393
www.jub.com

Subconsultant:

Stantec
2890 E Cottonwood Pkwy
Suite 300, Salt Lake City, Ut 84121
Tel: +1.801.617.3200
www.stantec.com

AGENCY

REVIEW

REUSE OF DRAWINGS
J-U-B SHALL RETAIN ALL COMMON LAW, STATUTORY, COPYRIGHT AND OTHER RESERVED RIGHTS OF THESE DRAWINGS, AND THE SAME SHALL NOT BE REUSED WITHOUT J-U-B'S PRIOR WRITTEN CONSENT. ANY REUSE WITHOUT WRITTEN CONSENT BY J-U-B WILL BE AT CLIENTS SOLE RISK AND WITHOUT LIABILITY OR LEGAL EXPOSURE TO J-U-B.

NO.	DESCRIPTION	BY	APP.	DATE
	REVISION			

SPANISH FORK & MAPLETON WRF
SPANISH FORK CITY CORPORATION

35 - MBR SUPPORT BUILDING
PANEL SCHEDULES - II

FILE : 55-20-124-35E-611
JUB PROJ. # : 55-20-124
DRAWN BY: KES
DESIGN BY: KES
CHECKED BY: SK

ONE INCH
AT FULL SIZE, IF NOT ONE INCH, SCALE ACCORDINGLY

LAST UPDATED: 7/6/2022

DRAWING:
35-E-611

SHEET: 665 OF 691

Plot Date:7/6/2022 8:16 PM Plotted By: Datas, Tejashree
Date Created:7/6/2022 C:\PW_WORKING\WTR\TDATAS\D0220282\55-20-124-35E-611.DWG

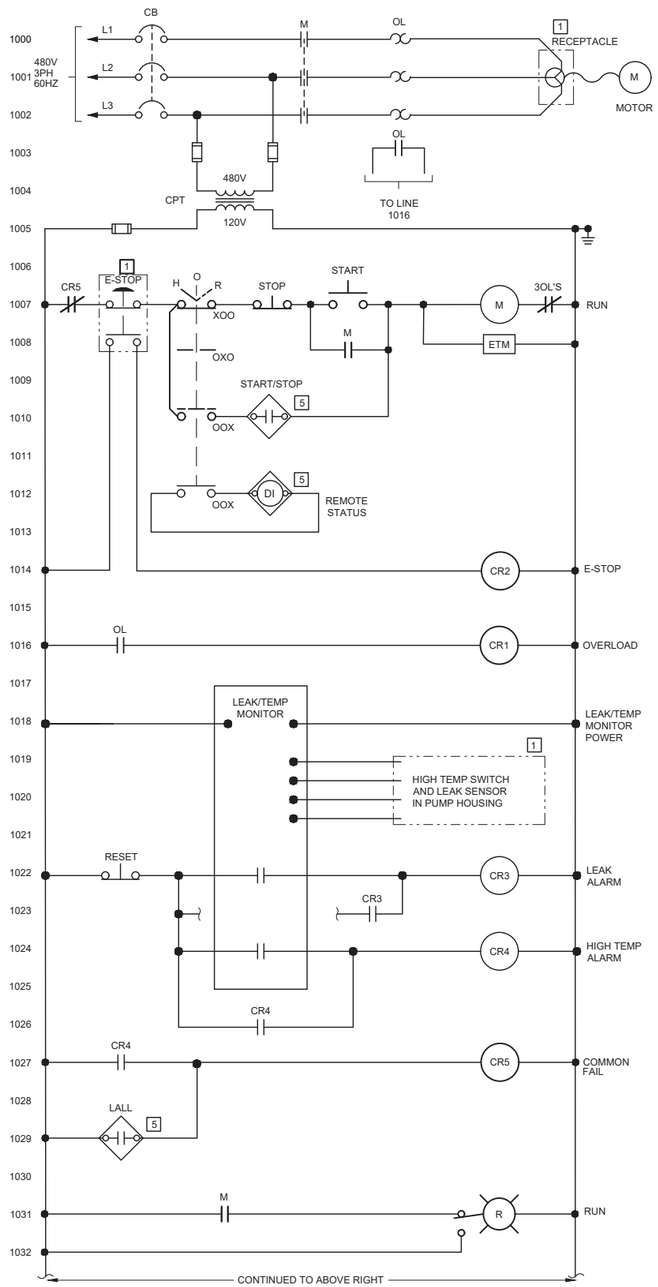

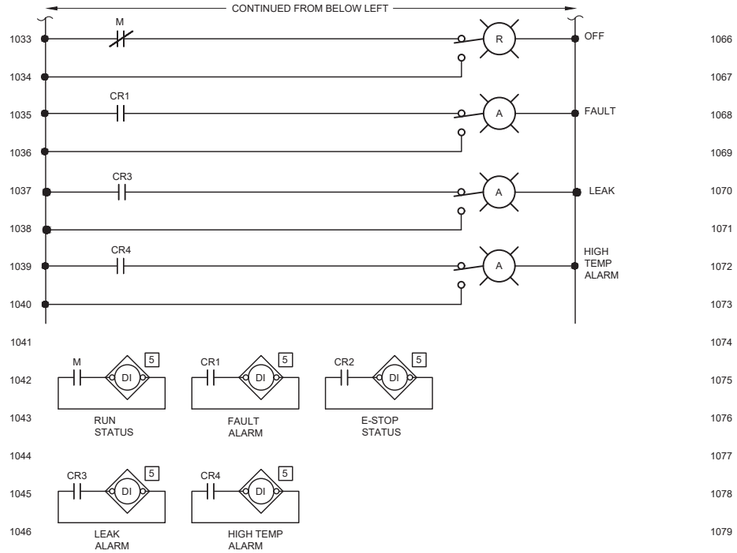

ANAEROBIC MIXER NO 1 (20-MX-1110)

TYPICAL FOR 20-MX-1112, 20-MX-1210, 20-MX-1212
(ALL ITEMS LOCATED AT MCC UNLESS OTHERWISE NOTED)

ANOXIC MIXER NO 1 (20-MX-1114)

TYPICAL FOR 20-MX-1116, 20-MX-1214, 20-MX-1216
(ALL ITEMS LOCATED AT MCC UNLESS OTHERWISE NOTED)

LOCATION LEGEND	
1	FIELD
2	LCS
3	LCP
4	MCC
5	PLC
6	VFD

Plot Date:7/6/2022 5:46 PM Plotted By: Dadas_Tejae\hmw
Date Created:7/6/2022 C:\PW_WORKING\WTR\TDADAS\D020266\255-20-124-35E-612.DWG

J-U-B ENGINEERS, INC.

J-U-B ENGINEERS, INC.
392. E. Winchester St., Suite 300
Salt Lake City, UT 84107
Phone: 801.547.0393
www.jub.com

Subconsultant:

Stantec
Stantec
2890 E Cottonwood Pkwy
Suite 300, Salt Lake City, Ut
84121
Tel: +1.801.617.3200
www.stantec.com

AGENCY

REVIEW

REUSE OF DRAWINGS
J-U-B SHALL RETAIN ALL COMMON LAW, STATUTORY, COPYRIGHT AND OTHER RESERVED RIGHTS OF THESE DRAWINGS, AND THE SAME SHALL NOT BE REUSED WITHOUT J-U-B'S PRIOR WRITTEN CONSENT. ANY REUSE WITHOUT WRITTEN CONSENT BY J-U-B WILL BE AT CLIENTS SOLE RISK AND WITHOUT LIABILITY OR LEGAL EXPOSURE TO J-U-B.

NO.	DESCRIPTION	BY	APP'L	DATE
	REVISION			

SPANISH FORK & MAPLETON WRF
SPANISH FORK CITY CORPORATION

35 - MBR SUPPORT BUILDING
CONTROL SCHEMATICS - I

FILE : 55-20-124-35E-612
JUB PROJ. # : 55-20-124
DRAWN BY: KES
DESIGN BY: KES
CHECKED BY: SK

ONE INCH
AT FULL SIZE, IF NOT ONE INCH, SCALE ACCORDINGLY

LAST UPDATED: 7/6/2022

DRAWING:
35-E-612

SHEET: 666 OF 691

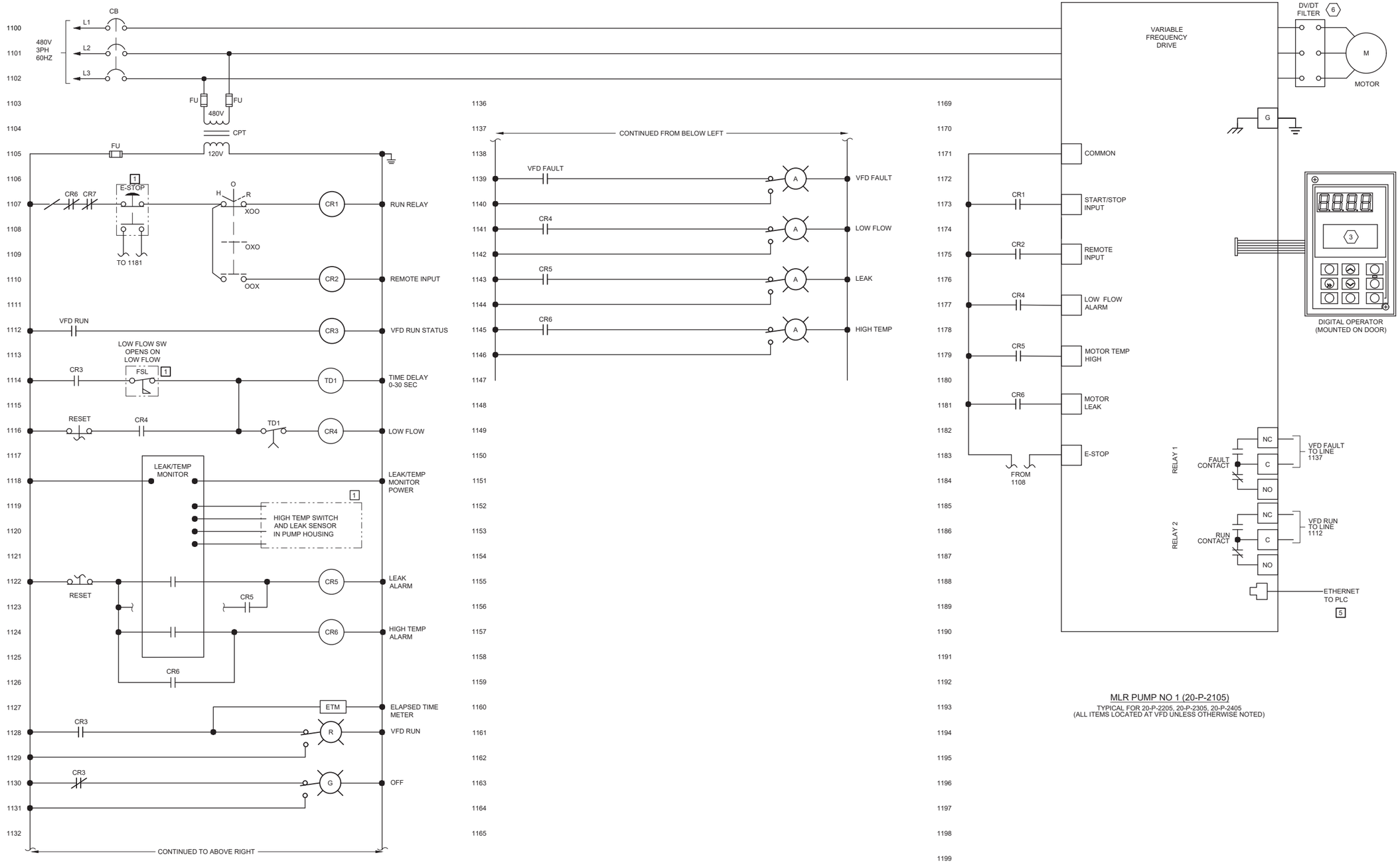

MLR PUMP NO 1 (20-P-2105)

TYPICAL FOR 20-P-2205, 20-P-2305, 20-P-2405
(ALL ITEMS LOCATED AT VFD UNLESS OTHERWISE NOTED)

LOCATION LEGEND	
1	FIELD
2	LCS
3	LCP
4	MCC
5	PLC
6	VFD

SHEET KEYNOTES

3	FOR VFD DIGITAL OPERATOR INTERFACE REFER TO P&ID'S.
6	PROVIDE FILTERS IF RECOMMENDED BY VFD MANUFACTURER. FILTER TO BE LOCATED INSIDE VFD ENCLOSURE.

J-U-B ENGINEERS, INC.

J-U-B ENGINEERS, INC.
392 E. Winchester St., Suite 300
Salt Lake City, UT 84107
Phone: 801.547.0393
www.jub.com

Subconsultant:

Stantec
Stantec
2890 E Cottonwood Pkwy
Suite 300, Salt Lake City, Ut 84121
Tel: +1.801.617.3200
www.stantec.com

AGENCY

REVIEW

REUSE OF DRAWINGS
J-U-B SHALL RETAIN ALL COMMON LAW, STATUTORY, COPYRIGHT AND OTHER RESERVED RIGHTS OF THESE DRAWINGS, AND THE SAME SHALL NOT BE REUSED WITHOUT J-U-B'S PRIOR WRITTEN CONSENT. ANY REUSE WITHOUT WRITTEN CONSENT BY J-U-B WILL BE AT CLIENTS SOLE RISK AND WITHOUT LIABILITY OR LEGAL EXPOSURE TO J-U-B.

NO.	DESCRIPTION	BY	APP'L	DATE
	REVISION			

SPANISH FORK & MAPLETON WRF
SPANISH FORK CITY CORPORATION

35 - MBR SUPPORT BUILDING
CONTROL SCHEMATICS - II

FILE : 55-20-124-35E-613
JUB PROJ. # : 55-20-124
DRAWN BY: KES
DESIGN BY: KES
CHECKED BY: SK

ONE INCH
AT FULL SIZE, IF NOT ONE INCH, SCALE ACCORDINGLY

LAST UPDATED: 7/6/2022

DRAWING:
35-E-613

SHEET: 667 OF 691

Plot Date:7/6/2022 5:50 PM Plotted By: Dadas, Tejal/mw
Date Created:7/6/2022 C:\PW_WORKINGWTR\TDADAS\D0020692\55-20-124-35E-613.DWG

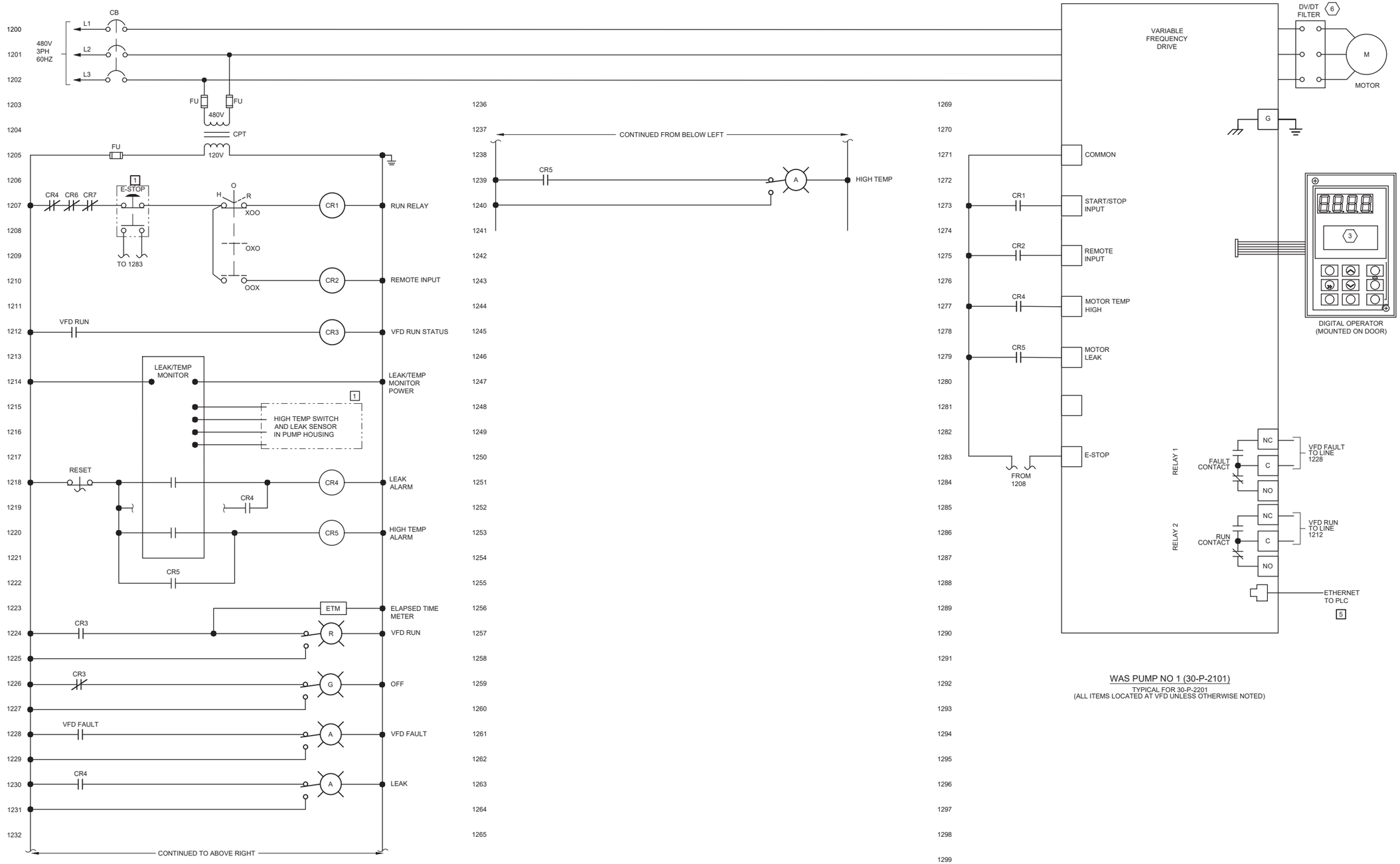

WAS PUMP NO 1 (30-P-2101)

TYPICAL FOR 30-P-2201
(ALL ITEMS LOCATED AT VFD UNLESS OTHERWISE NOTED)

LOCATION LEGEND	
1	FIELD
2	LCS
3	LCP
4	MCC
5	PLC
6	VFD

SHEET KEYNOTES

3	FOR VFD DIGITAL OPERATOR INTERFACE REFER TO P&ID'S.
6	PROVIDE FILTERS IF RECOMMENDED BY VFD MANUFACTURER. FILTER TO BE LOCATED INSIDE VFD ENCLOSURE.

J-U-B ENGINEERS, INC.

J-U-B ENGINEERS, INC.
392 E. Winchester St., Suite 300
Salt Lake City, UT 84107
Phone: 801.547.0393
www.jub.com

Subconsultant:

Stantec
Stantec
2890 E Cottonwood Pkwy
Suite 300, Salt Lake City, Ut
84121
Tel: +1.801.617.3200
www.stantec.com

AGENCY

REVIEW

REUSE OF DRAWINGS
J-U-B SHALL RETAIN ALL COMMON LAW, STATUTORY, COPYRIGHT AND OTHER RESERVED RIGHTS OF THESE DRAWINGS, AND THE SAME SHALL NOT BE REUSED WITHOUT J-U-B'S PRIOR WRITTEN CONSENT. ANY REUSE WITHOUT WRITTEN CONSENT BY J-U-B WILL BE AT CLIENTS SOLE RISK AND WITHOUT LIABILITY OR LEGAL EXPOSURE TO J-U-B.

NO.	DESCRIPTION	BY	APP'L	DATE
	REVISION			

SPANISH FORK & MAPLETON WRF
SPANISH FORK CITY CORPORATION

35 - MBR SUPPORT BUILDING
CONTROL SCHEMATICS - III

FILE : 55-20-124-35E-614
JUB PROJ. # : 55-20-124
DRAWN BY: KES
DESIGN BY: KES
CHECKED BY: SK

ONE INCH
AT FULL SIZE, IF NOT ONE INCH, SCALE ACCORDINGLY

LAST UPDATED: 7/6/2022

DRAWING:
35-E-614

SHEET: 668 OF 691

Plot Date:7/6/2022 5:53 PM Plotted By: Dadas, Tejal/hmo
Date Created:7/6/2022 C:\PW_WORKINGSWTR\TDADAS\D0020692\55-20-124-35E-614.DWG

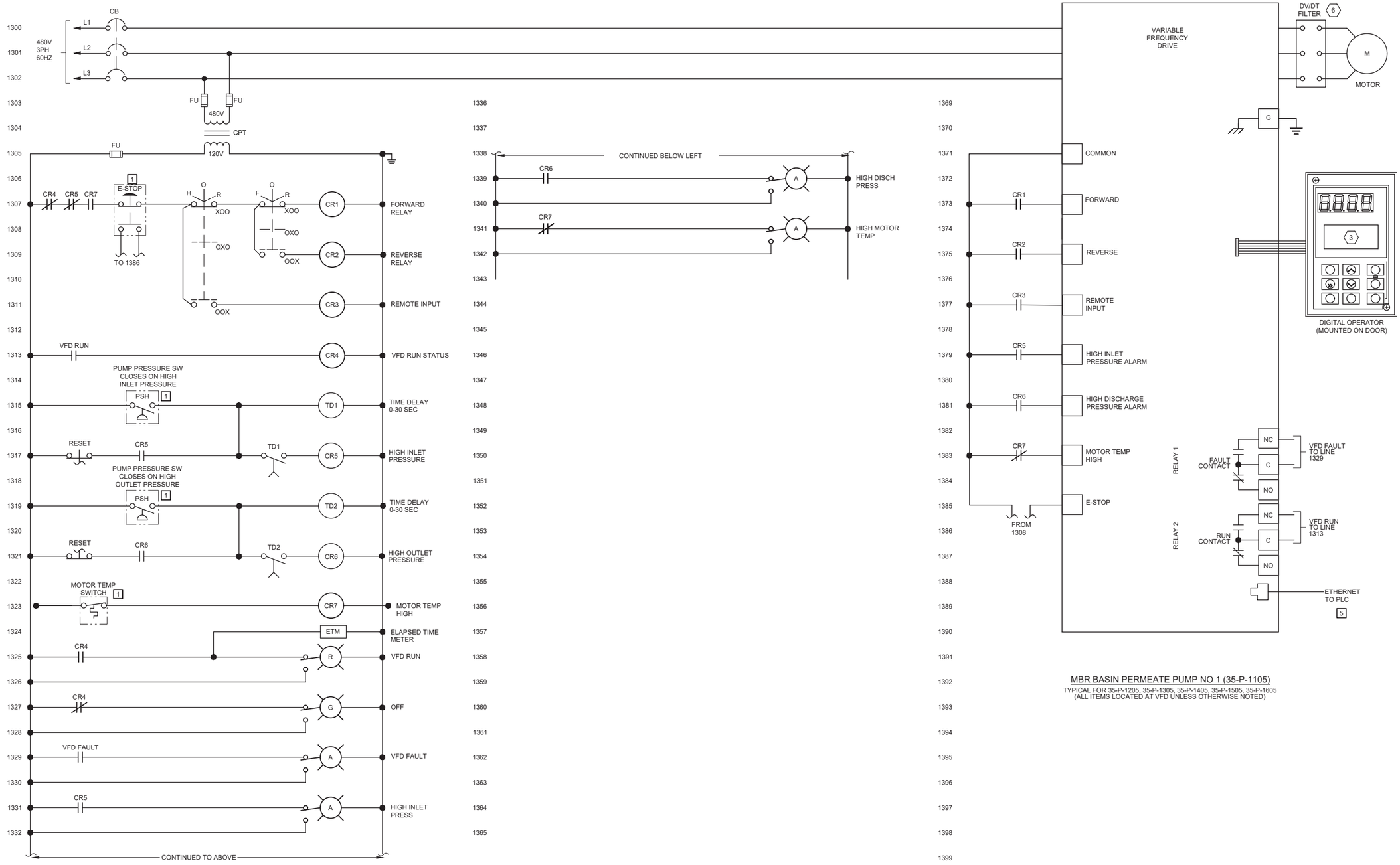

MBR BASIN PERMEATE PUMP NO 1 (35-P-1105)

TYPICAL FOR 35-P-1205, 35-P-1305, 35-P-1405, 35-P-1505, 35-P-1605
(ALL ITEMS LOCATED AT VFD UNLESS OTHERWISE NOTED)

LOCATION LEGEND	
1	FIELD
2	LCS
3	LCP
4	MCC
5	PLC
6	VFD

SHEET KEYNOTES

3	FOR VFD DIGITAL OPERATOR INTERFACE REFER TO P&ID'S.
6	PROVIDE FILTERS IF RECOMMENDED BY VFD MANUFACTURER. FILTER TO BE LOCATED INSIDE VFD ENCLOSURE.

J-U-B ENGINEERS, INC.
J-U-B ENGINEERS, INC.
392 E. Winchester St., Suite 300
Salt Lake City, UT 84107
Phone: 801.547.0393
www.jub.com

Subconsultant:
Stantec
Stantec
2890 E Cottonwood Pkwy
Suite 300, Salt Lake City, Ut
84121
Tel: +1.801.617.3200
www.stantec.com

AGENCY

REVIEW

REUSE OF DRAWINGS
J-U-B SHALL RETAIN ALL COMMON LAW, STATUTORY, COPYRIGHT AND OTHER RESERVED RIGHTS OF THESE DRAWINGS, AND THE SAME SHALL NOT BE REUSED WITHOUT J-U-B'S PRIOR WRITTEN CONSENT. ANY REUSE WITHOUT WRITTEN CONSENT BY J-U-B WILL BE AT CLIENTS SOLE RISK AND WITHOUT LIABILITY OR LEGAL EXPOSURE TO J-U-B.

NO.	DESCRIPTION	BY	APP'L	DATE
	REVISION			

SPANISH FORK & MAPLETON WRF
SPANISH FORK CITY CORPORATION

35 - MBR SUPPORT BUILDING
CONTROL SCHEMATICS - IV

FILE : 55-20-124-35E-615
JUB PROJ. # : 55-20-124
DRAWN BY: KES
DESIGN BY: KES
CHECKED BY: SK
ONE INCH
AT FULL SIZE, IF NOT ONE INCH, SCALE ACCORDINGLY
LAST UPDATED: 7/6/2022

DRAWING:
35-E-615

SHEET: 669 OF 691

Plot Date:7/6/2022 5:54 PM Plotted By: Datas, Tejashree
Date Created:7/6/2022 C:\FW_WORKING\WTR\TIDAS\DO2020\8255-20-124-35E-615.DWG

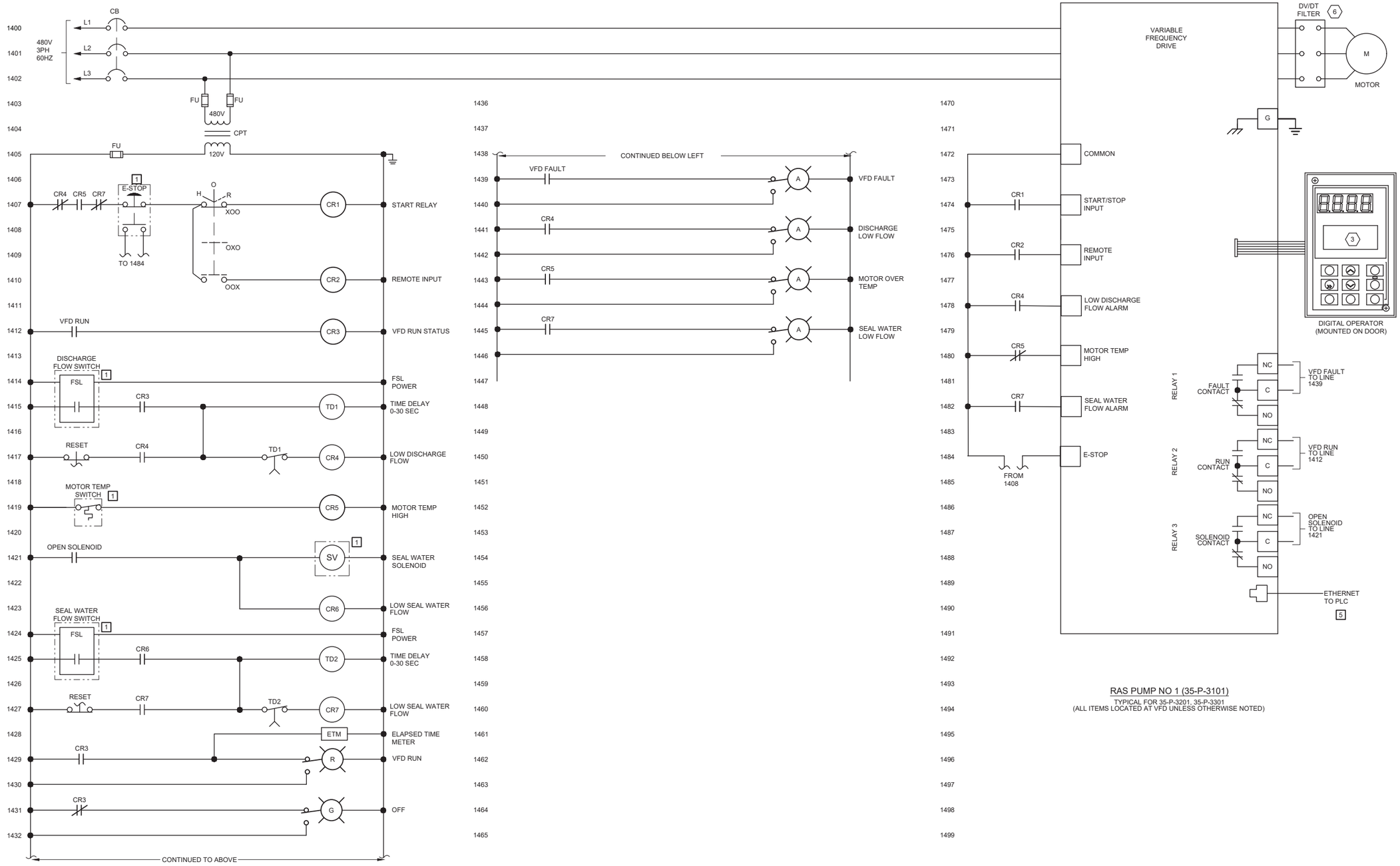

RAS PUMP NO 1 (35-P-3101)

TYPICAL FOR 35-P-3201, 35-P-3301
(ALL ITEMS LOCATED AT VFD UNLESS OTHERWISE NOTED)

LOCATION LEGEND	
1	FIELD
2	LCS
3	LCP
4	MCC
5	PLC
6	VFD

SHEET KEYNOTES

3	FOR VFD DIGITAL OPERATOR INTERFACE REFER TO P&ID'S.
6	PROVIDE FILTERS IF RECOMMENDED BY VFD MANUFACTURER. FILTER TO BE LOCATED INSIDE VFD ENCLOSURE.

J-U-B ENGINEERS, INC.

J-U-B ENGINEERS, INC.
392 E. Winchester St., Suite 300
Salt Lake City, UT 84107
Phone: 801.547.0393
www.jub.com

Subconsultant:

Stantec
Stantec
2890 E Cottonwood Pkwy
Suite 300, Salt Lake City, Ut 84121
Tel: +1.801.617.3200
www.stantec.com

AGENCY

REVIEW

REUSE OF DRAWINGS
J-U-B SHALL RETAIN ALL COMMON LAW, STATUTORY, COPYRIGHT AND OTHER RESERVED RIGHTS OF THESE DRAWINGS, AND THE SAME SHALL NOT BE REUSED WITHOUT J-U-B'S PRIOR WRITTEN CONSENT. ANY REUSE WITHOUT WRITTEN CONSENT BY J-U-B WILL BE AT CLIENTS SOLE RISK AND WITHOUT LIABILITY OR LEGAL EXPOSURE TO J-U-B.

NO.	DESCRIPTION	BY	APP'D	DATE
	REVISION			

SPANISH FORK & MAPLETON WRF
SPANISH FORK CITY CORPORATION

35 - MBR SUPPORT BUILDING
CONTROL SCHEMATICS - V

FILE : 55-20-124-35E-616
JUB PROJ. # : 55-20-124
DRAWN BY: KES
DESIGN BY: KES
CHECKED BY: SK
ONE INCH
AT FULL SIZE, IF NOT ONE INCH, SCALE ACCORDINGLY
LAST UPDATED: 7/6/2022

DRAWING:
35-E-616
SHEET: 670 OF 691

Plot Date:7/6/2022 5:56 PM Plotted By: Dadas, Tejasbhee
Date Created:7/6/2022 C:\PW_WORKINGWTRT\DADAS\D0202662\55-20-124-35E-616.DWG

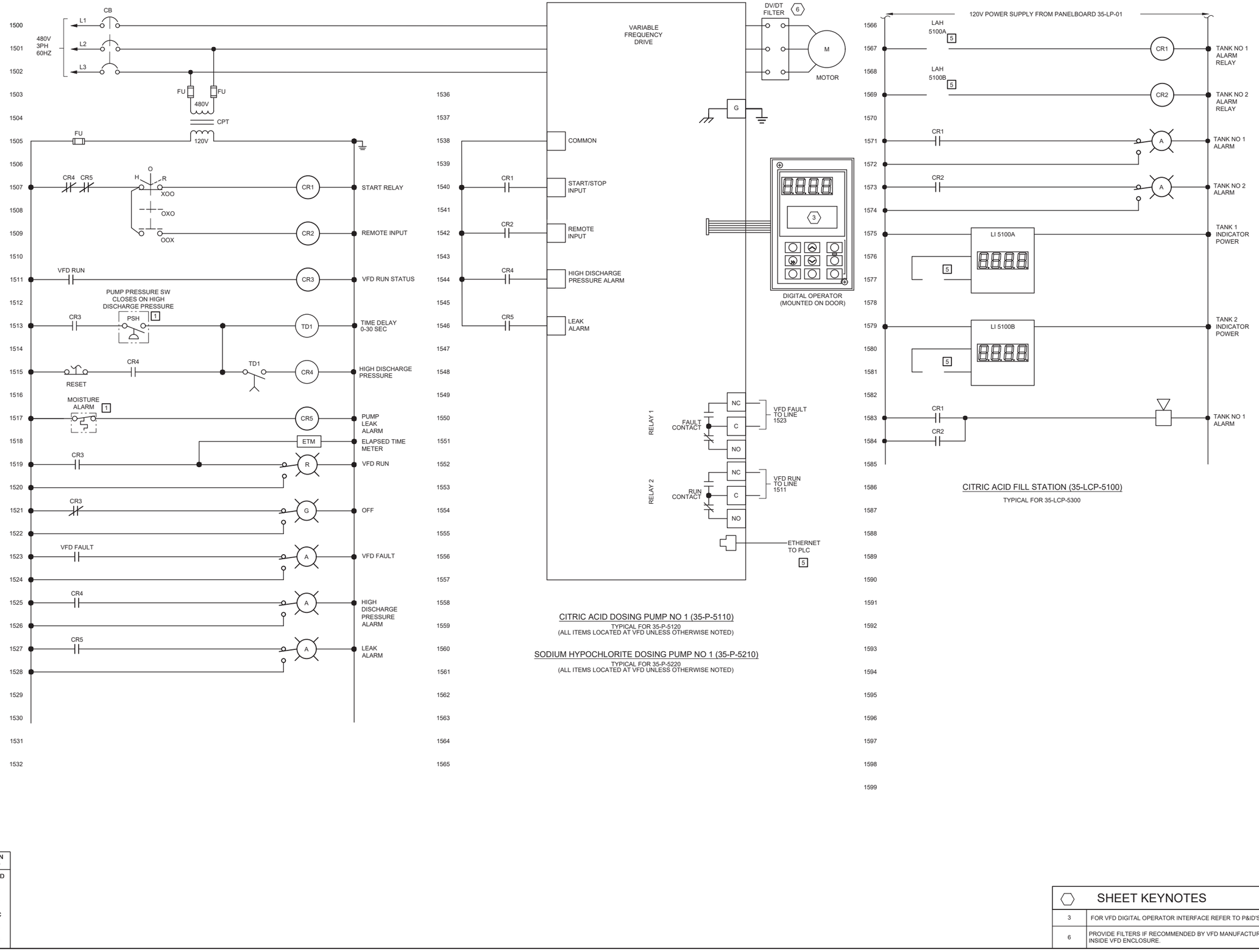

CITRIC ACID DOSING PUMP NO 1 (35-P-5110)

TYPICAL FOR 35-P-5120
(ALL ITEMS LOCATED AT VFD UNLESS OTHERWISE NOTED)

SODIUM HYPOCHLORITE DOSING PUMP NO 1 (35-P-5210)

TYPICAL FOR 35-P-5220
(ALL ITEMS LOCATED AT VFD UNLESS OTHERWISE NOTED)

CITRIC ACID FILL STATION (35-LCP-5100)

TYPICAL FOR 35-LCP-5300

LOCATION LEGEND	
1	FIELD
2	LCS
3	LCP
4	MCC
5	PLC
6	VFD

SHEET KEYNOTES

3	FOR VFD DIGITAL OPERATOR INTERFACE REFER TO P&ID'S.
6	PROVIDE FILTERS IF RECOMMENDED BY VFD MANUFACTURER. FILTER TO BE LOCATED INSIDE VFD ENCLOSURE.

J-U-B ENGINEERS, INC.

J-U-B ENGINEERS, INC.
392 E. Winchester St., Suite 300
Salt Lake City, UT 84107
Phone: 801.547.0393
www.jub.com

Subconsultant:

Stantec

Stantec
2890 E Cottonwood Pkwy
Suite 300, Salt Lake City, Ut 84121
Tel: +1.801.617.3200
www.stantec.com

AGENCY

REVIEW

REUSE OF DRAWINGS
J-U-B SHALL RETAIN ALL COMMON LAW STATUTORY, COPYRIGHT AND OTHER RESERVED RIGHTS OF THESE DRAWINGS, AND THE SAME SHALL NOT BE REUSED WITHOUT J-U-B'S PRIOR WRITTEN CONSENT. ANY REUSE WITHOUT WRITTEN CONSENT BY J-U-B WILL BE AT CLIENTS SOLE RISK AND WITHOUT LIABILITY OR LEGAL EXPOSURE TO J-U-B.

NO.	DESCRIPTION	BY	APP'D	DATE
	REVISION			

SPANISH FORK & MAPLETON WRF
SPANISH FORK CITY CORPORATION

35 - MBR SUPPORT BUILDING
CONTROL SCHEMATICS - VI

FILE :	55-20-124-35E-617
JUB PROJ. # :	55-20-124
DRAWN BY:	KES
DESIGN BY:	KES
CHECKED BY:	SK

ONE INCH
AT FULL SIZE, IF NOT ONE INCH, SCALE ACCORDINGLY

LAST UPDATED: 7/6/2022

DRAWING:
35-E-617

SHEET: 671 OF 691

Plot Date:7/6/2022 5:58 PM Plotted By: Dadas, Tejasbhee
Date Created:7/6/2022 C:\PW_WORKINGWTR\TDADAS\D0202662\55-20-124-35E-617.DWG

SHEET KEYNOTES

1	PROVIDE 600A MAIN BREAKER AND 600:5 CT'S FOR CURRENT LOAD BUT SIZE EQUIPMENT FOR FUTURE 1200A MAIN BREAKER AND 1200:5 CT'S

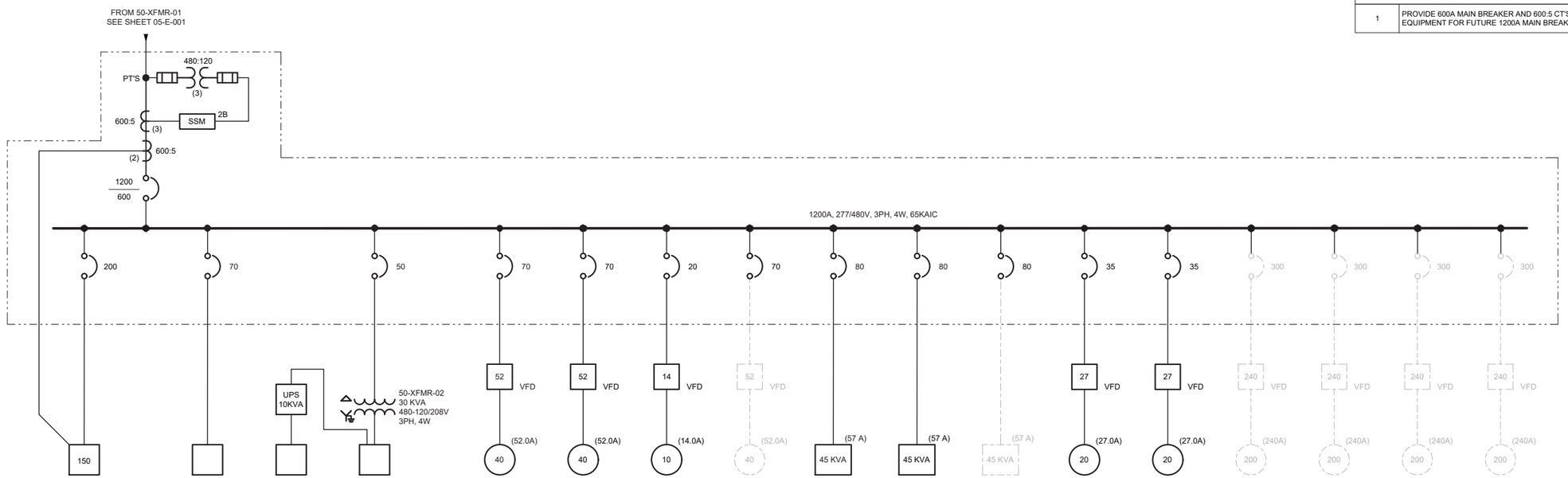

50-SWBD-01

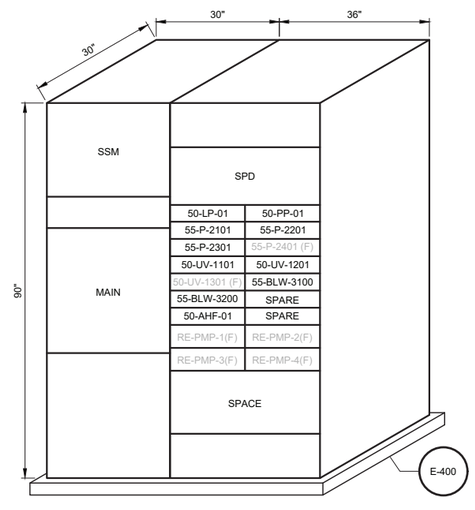

50-SWBD-01 ELEVATION

J-U-B ENGINEERS, INC.

J-U-B ENGINEERS, INC.
392. E. Winchester St., Suite 300
Salt Lake City, UT 84107
Phone: 801.547.0393
www.jub.com

Subconsultant:

Stantec
Stantec
2890 E Cottonwood Pkwy
Suite 300, Salt Lake City, Ut
84121
Tel: +1.801.617.3200
www.stantec.com

AGENCY

REVIEW

REUSE OF DRAWINGS
J-U-B SHALL RETAIN ALL COMMON LAW, STATUTORY, COPYRIGHT AND OTHER RESERVED RIGHTS OF THESE DRAWINGS, AND THE SAME SHALL NOT BE REUSED WITHOUT J-U-B'S PRIOR WRITTEN CONSENT. ANY REUSE WITHOUT WRITTEN CONSENT BY J-U-B WILL BE AT CLIENTS SOLE RISK AND WITHOUT LIABILITY OR LEGAL EXPOSURE TO J-U-B.

NO.	DESCRIPTION	BY	APP'L	DATE
	REVISION			

SPANISH FORK & MAPLETON WRF
SPANISH FORK CITY CORPORATION

50 - UV DISINFECTION
SINGLE LINE DIAGRAM

FILE : 55-20-124-50E-001
JUB PROJ. # : 55-20-124
DRAWN BY: KES
DESIGN BY: KES
CHECKED BY: SK

ONE INCH
AT FULL SIZE, IF NOT ONE INCH, SCALE ACCORDINGLY

LAST UPDATED: 7/6/2022

DRAWING:
50-E-001

SHEET: 672 OF 691

Plot Date:7/6/2022 5:09 PM Plotted By: Thakare, Ashish
Date Created:7/6/2022 C:\PW_WORKING\WTR\ATHAKARE\D0202863\55-20-124-50E-001.DWG

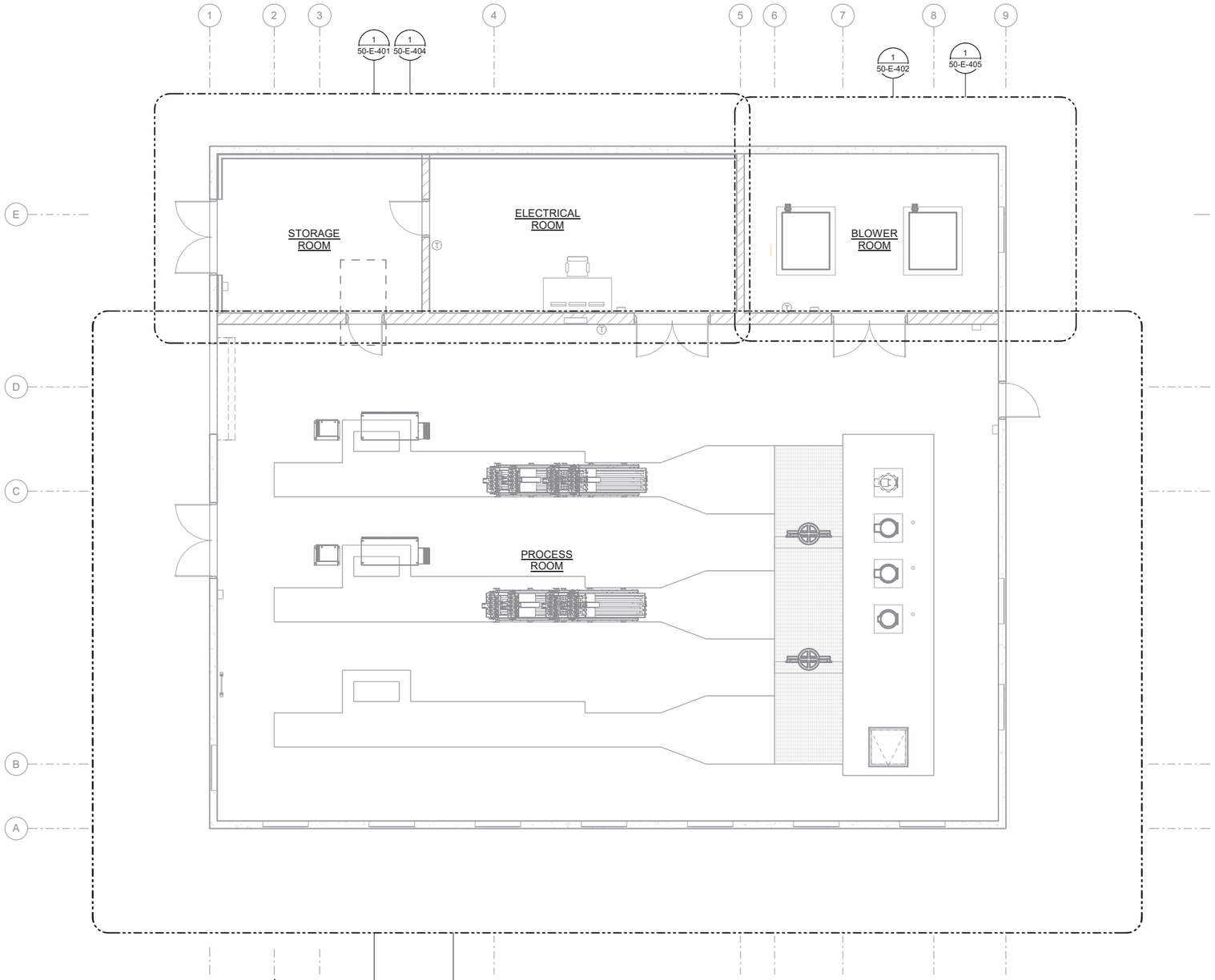

OVERALL ELECTRICAL PLAN

SCALE: 3/16" = 1'-0"

7/6/2022 6:09:06 PM
BIM 360://Spanish Fork and Mapleton WRF Design/55-20-124_50e-md.rvt

J-U-B ENGINEERS, INC.

J-U-B ENGINEERS, INC.
392. E. Winchester St., Suite 300
Salt Lake City, UT 84107
Phone: 801.547.0393
www.jub.com

Subconsultant:

Stantec

Stantec
2890 E Cottonwood Pkwy
Ste 300
Salt Lake City, UT 84121
Tel: 801.617.3200
www.stantec.com

AGENCY

REVIEW

REUSE OF DRAWINGS

J-U-B SHALL RETAIN ALL COMMON LAW, STATUTORY, COPYRIGHT AND OTHER RESERVED RIGHTS IN THE DRAWINGS AND OTHER DOCUMENTS AND SHALL NOT BE REUSED WITHOUT J-U-B'S PRIOR WRITTEN CONSENT. ANY REUSE WITHOUT WRITTEN CONSENT BY J-U-B WILL BE AT CLIENT'S SOLE RISK AND WITHOUT LIABILITY OR LEGAL EXPOSURE TO J-U-B.

REVISION			
NO.	DESCRIPTION	BY	APP.	DATE

SPANISH FORK & MAPLETON WRF
SPANISH FORK CITY CORPORATION

50 - UV DISINFECTION
OVERALL ELECTRICAL PLAN

FILE:
JUB PROJ. #: 55-20-124
DRAWN BY: TBD
DESIGN BY: KES
CHECKED BY:SK

ONE INCH
AT FULL SIZE. IF NOT ONE INCH, SCALE ACCORDINGLY

LAST UPDATED: 07/08/2022

DRAWING:
50-E-101

SHEET: 673 OF 691

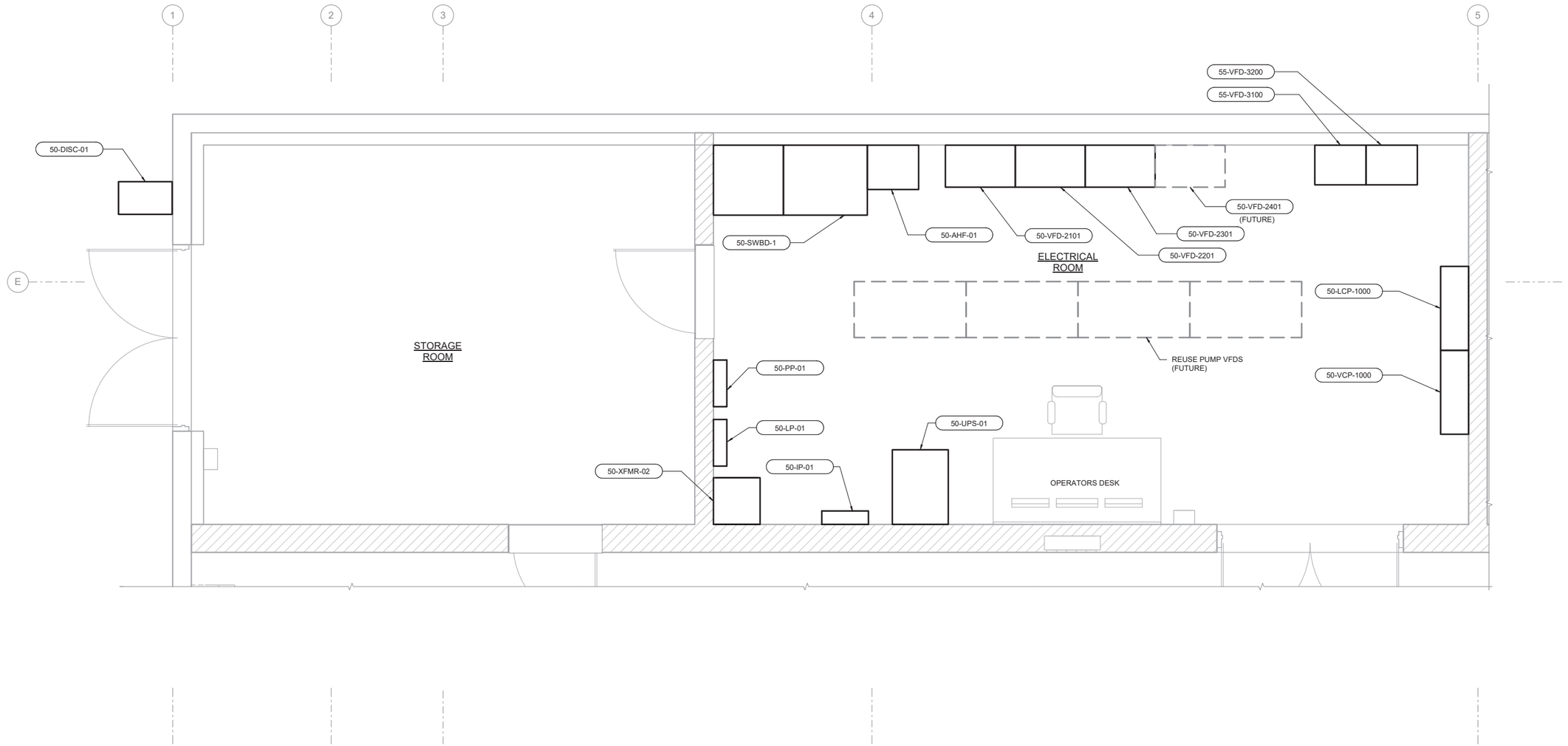

1 50-E-101 POWER PARTIAL PLAN - I

SCALE: 1/2" = 1'-0"

7/8/2022 6:09:09 PM
BIM 360://Spanish Fork and Mapleton WRF Design/55-20-124_50e-md.rvt

J-U-B ENGINEERS, INC.

J-U-B ENGINEERS, INC.
392. E. Winchester St., Suite 300
Salt Lake City, UT 84107
Phone: 801.547.0393
www.jub.com

Subconsultant:

Stantec

Stantec
2890 E Cottonwood Pkwy
Ste 300
Salt Lake City, UT 84121
Tel: 801.617.3200
www.stantec.com

AGENCY

REVIEW

REUSE OF DRAWINGS

J-U-B SHALL RETAIN ALL COMMON LAW, STATUTORY, COPYRIGHT AND OTHER RESERVED RIGHTS IN THE DRAWINGS AND SPECIFICATIONS AND SHALL NOT BE REUSED WITHOUT J-U-B'S PRIOR WRITTEN CONSENT. ANY REUSE WITHOUT WRITTEN CONSENT BY J-U-B WILL BE AT CLIENT'S SOLE RISK AND WITHOUT LIABILITY OR LEGAL EXPOSURE TO J-U-B.

NO.	DESCRIPTION	BY	APP.	DATE

REVISION

SPANISH FORK & MAPLETON WRF
SPANISH FORK CITY CORPORATION

50 - UV DISINFECTION
POWER PARTIAL PLAN - I

FILE:
JUB PROJ. #: 55-20-124
DRAWN BY: TBD
DESIGN BY: KES
CHECKED BY:SK

ONE INCH
AT FULL SIZE. IF NOT ONE INCH, SCALE ACCORDINGLY

LAST UPDATED: 07/08/2022

DRAWING:
50-E-401

SHEET: 674 OF 691

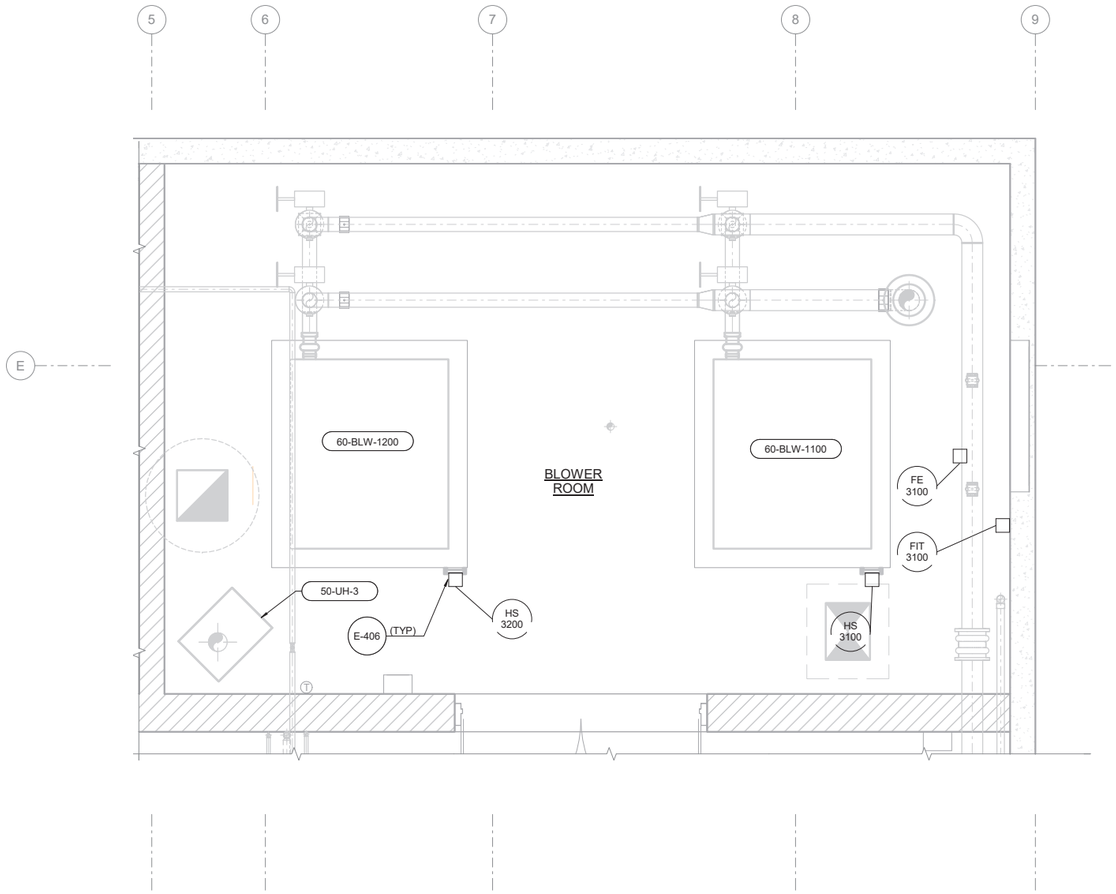

1 / 50-E-101 POWER PARTIAL PLAN - II

SCALE: 1/2" = 1'-0"

7/8/2022 6:09:09 PM
BIM 360://Spanish Fork and Mapleton WRF Design/55-20-124_50e-md.rvt

J-U-B ENGINEERS, INC.

J-U-B ENGINEERS, INC.
392 E. Winchester St., Suite 300
Salt Lake City, UT 84107
Phone: 801.547.0393
www.jub.com

Subconsultant:

Stantec

Stantec
2890 E Cottonwood Pkwy
Ste 300
Salt Lake City, UT 84121
Tel: 801.617.3200
www.stantec.com

AGENCY

REVIEW

REUSE OF DRAWINGS

J-U-B SHALL RETAIN ALL COMMON LAW, STATUTORY, COPYRIGHT AND OTHER RESERVED RIGHTS IN THE DRAWINGS, MODELS AND OTHER MATERIALS THAT SHALL NOT BE REUSED WITHOUT J-U-B'S PRIOR WRITTEN CONSENT. ANY REUSE WITHOUT WRITTEN CONSENT BY J-U-B WILL BE AT CLIENT'S SOLE RISK AND WITHOUT LIABILITY OR LEGAL EXPOSURE TO J-U-B.

NO.	DESCRIPTION	BY	APP.	DATE

REVISION

SPANISH FORK & MAPLETON WRF
SPANISH FORK CITY CORPORATION

50 - UV DISINFECTION
POWER PARTIAL PLAN - II

FILE:
JUB PROJ. #: 55-20-124
DRAWN BY: TBD
DESIGN BY: KES
CHECKED BY:SK

ONE INCH
AT FULL SIZE, IF NOT ONE INCH, SCALE ACCORDINGLY

LAST UPDATED: 07/08/2022

DRAWING:
50-E-402

SHEET: 675 OF 691

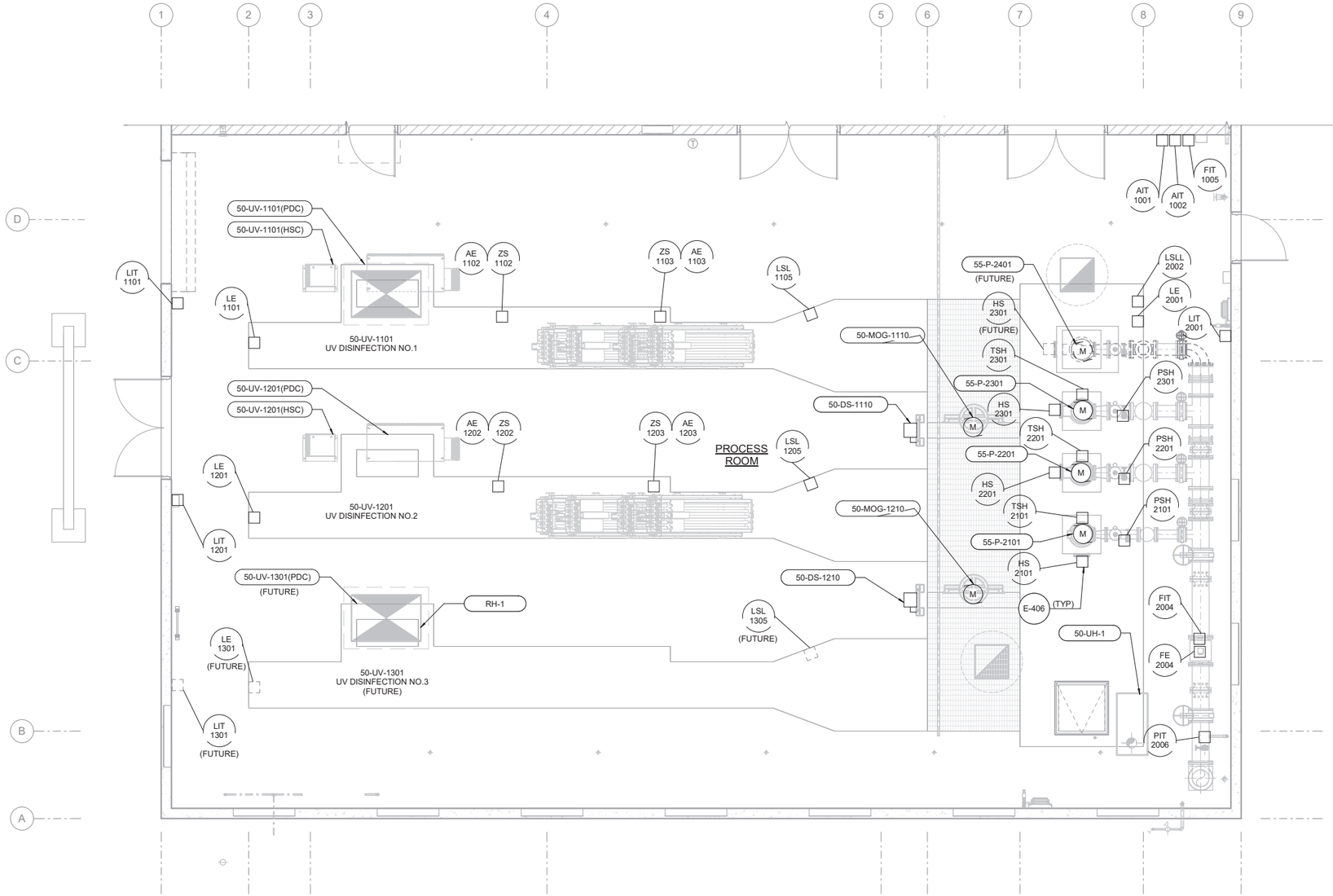

1 / 50-E-101 POWER PARTIAL PLAN - III

SCALE: 1/4" = 1'-0"

7/6/2022 6:09:30 PM
BIM 360://Spanish Fork and Mapleton WRF Design/55-20-124_50e-md.rvt

J-U-B ENGINEERS, INC.

J-U-B ENGINEERS, INC.
392. E. Winchester St., Suite 300
Salt Lake City, UT 84107
Phone: 801.547.0393
www.jub.com

Subconsultant:

Stantec

Stantec
2890 E Cottonwood Pkwy
Ste 300
Salt Lake City, UT 84121
Tel: 801.617.3200
www.stantec.com

AGENCY

REVIEW

REUSE OF DRAWINGS

J-U-B SHALL RETAIN ALL COMMON LAW, STATUTORY, COPYRIGHT AND OTHER RESERVED RIGHTS IN THESE DRAWINGS AND SPECIFICATIONS. THEY SHALL NOT BE REUSED WITHOUT J-U-B'S PRIOR WRITTEN CONSENT. ANY REUSE WITHOUT WRITTEN CONSENT BY J-U-B WILL BE AT CLIENT'S SOLE RISK AND WITHOUT LIABILITY OR LEGAL EXPOSURE TO J-U-B.

NO.	DESCRIPTION	BY	APP.	DATE

REVISION

SPANISH FORK & MAPLETON WRF
SPANISH FORK CITY CORPORATION

50 - UV DISINFECTION
POWER PARTIAL PLAN - III

FILE:
JUB PROJ. #: 55-20-124
DRAWN BY: TBD
DESIGN BY: KES
CHECKED BY: SK

ONE INCH
AT FULL SIZE, IF NOT ONE INCH, SCALE ACCORDINGLY

LAST UPDATED: 07/08/2022

DRAWING:
50-E-403

SHEET: 676 OF 691

SHEET KEYNOTE

2	COIL GROUND WIRE FOR FUTURE CONNECTION.

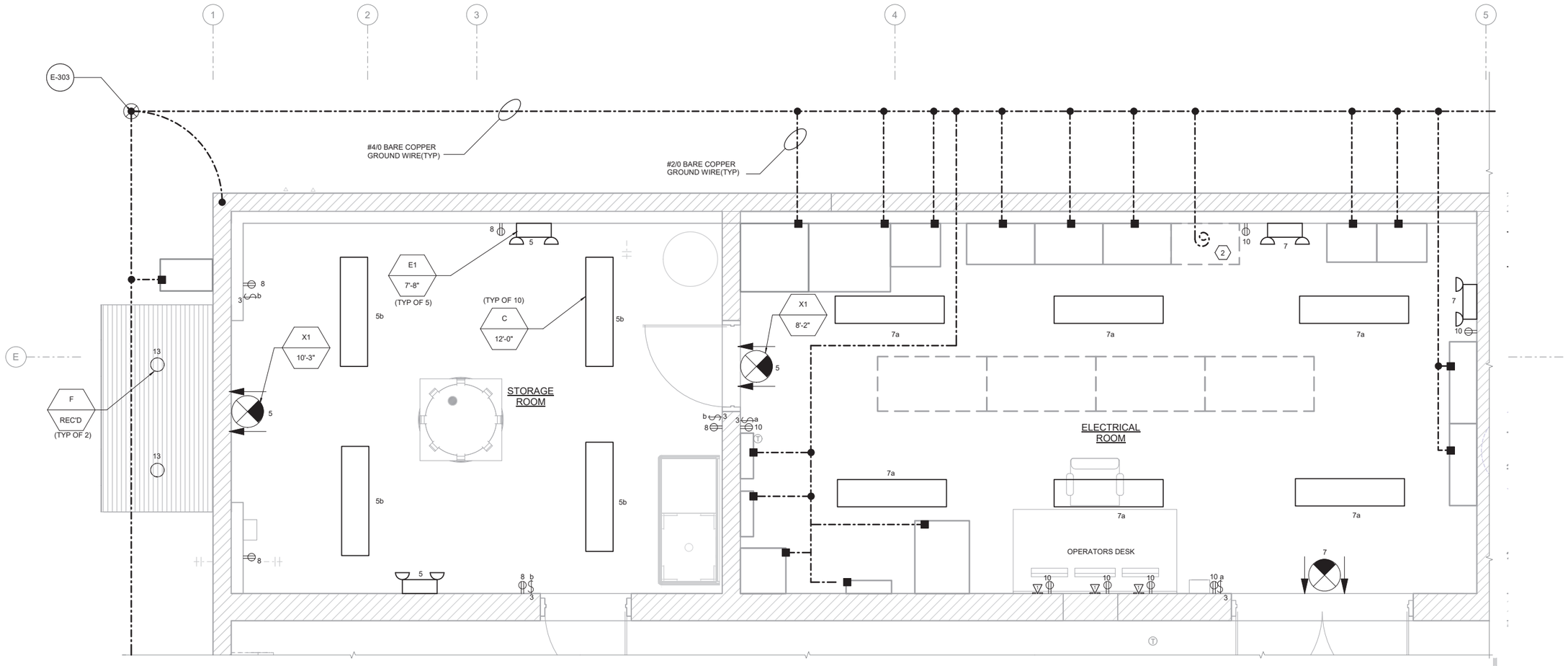

1 / 50-E-101 LIGHTING,RECEPTACLE AND GROUNDING PARTIAL PLAN - I

SCALE: 1/2" = 1'-0"

7/6/2022 6:09:31 PM
BIM 360://Spanish Fork and Mapleton WRF Design/55-20-124_50e-md.rvt

J-U-B ENGINEERS, INC.

J-U-B ENGINEERS, INC.
392. E. Winchester St., Suite 300
Salt Lake City, UT 84107
Phone: 801.547.0393
www.jub.com

Subconsultant:

Stantec
Stantec
2890 E Cottonwood Pkwy
Ste 300
Salt Lake City, UT 84121
Tel: 801.617.3200
www.stantec.com

AGENCY

REVIEW

REUSE OF DRAWINGS

J-U-B SHALL RETAIN ALL COMMON LAW, STATUTORY, COPYRIGHT AND OTHER RESERVED RIGHTS IN THESE DRAWINGS AND SPECIFICATIONS. THEY SHALL NOT BE REUSED WITHOUT J-U-B'S PRIOR WRITTEN CONSENT. ANY REUSE WITHOUT WRITTEN CONSENT BY J-U-B WILL BE AT CLIENT'S SOLE RISK AND WITHOUT LIABILITY OR LEGAL EXPOSURE TO J-U-B.

NO.	DESCRIPTION	BY	APP.	DATE
	REVISION			

SPANISH FORK & MAPLETON WRF
SPANISH FORK CITY CORPORATION

50 - UV DISINFECTION
LIGHTING,RECEPTACLE AND GROUNDING PARTIAL PLAN - I

FILE:
JUB PROJ. #: 55-20-124
DRAWN BY: TBD
DESIGN BY: KES
CHECKED BY:SK
ONE INCH
AT FULL SIZE. IF NOT ONE INCH, SCALE ACCORDINGLY
LAST UPDATED: 07/06/2022

DRAWING:
50-E-404

SHEET: 677 OF 691

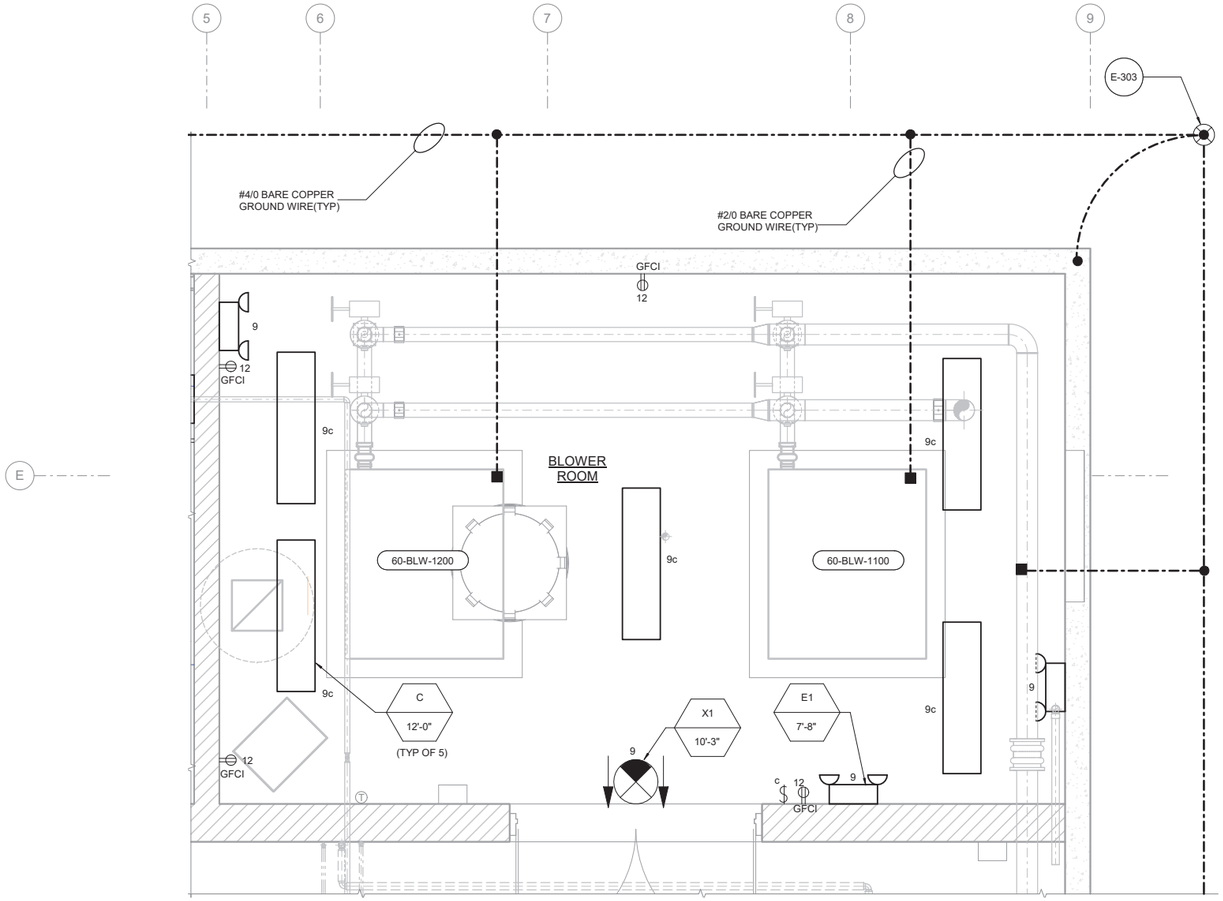

1 / 50-E-101 LIGHTING,RECEPTACLE AND GROUNDING PARTIAL PLAN - II

SCALE: 1/2" = 1'-0"

7/6/2022 6:09:32 PM
BIM 360://Spanish Fork and Mapleton WRF Design/55-20-124_50e-md.rvt

J-U-B ENGINEERS, INC.

J-U-B ENGINEERS, INC.
392 E. Winchester St., Suite 300
Salt Lake City, UT 84107
Phone: 801.547.0393
www.jub.com

Subconsultant:

Stantec

Stantec
2890 E Cottonwood Pkwy
Ste 300
Salt Lake City, UT 84121
Tel: 801.617.3200
www.stantec.com

AGENCY

REVIEW

REUSE OF DRAWINGS

J-U-B SHALL RETAIN ALL COMMON LAW, STATUTORY, COPYRIGHT AND OTHER RESERVED RIGHTS IN THE DRAWINGS AND OTHER DOCUMENTS PREPARED BY J-U-B. THE DRAWINGS AND OTHER DOCUMENTS SHALL NOT BE REUSED WITHOUT J-U-B'S PRIOR WRITTEN CONSENT. ANY REUSE WITHOUT WRITTEN CONSENT BY J-U-B WILL BE AT CLIENT'S SOLE RISK AND WITHOUT LIABILITY OR LEGAL EXPOSURE TO J-U-B.

NO.	DESCRIPTION	BY	APP'L	DATE

REVISION

SPANISH FORK & MAPLETON WRF
SPANISH FORK CITY CORPORATION

50 - UV DISINFECTION
LIGHTING,RECEPTACLE AND GROUNDING PARTIAL PLAN - II

FILE:
JUB PROJ. #: 55-20-124
DRAWN BY: TBD
DESIGN BY: KES
CHECKED BY: SK

ONE INCH
AT FULL SIZE, IF NOT ONE INCH, SCALE ACCORDINGLY

LAST UPDATED: 07/08/2022

DRAWING:
50-E-405

SHEET: 678 OF 691

SHEET KEYNOTE

2	COIL GROUND WIRE FOR FUTURE CONNECTION.

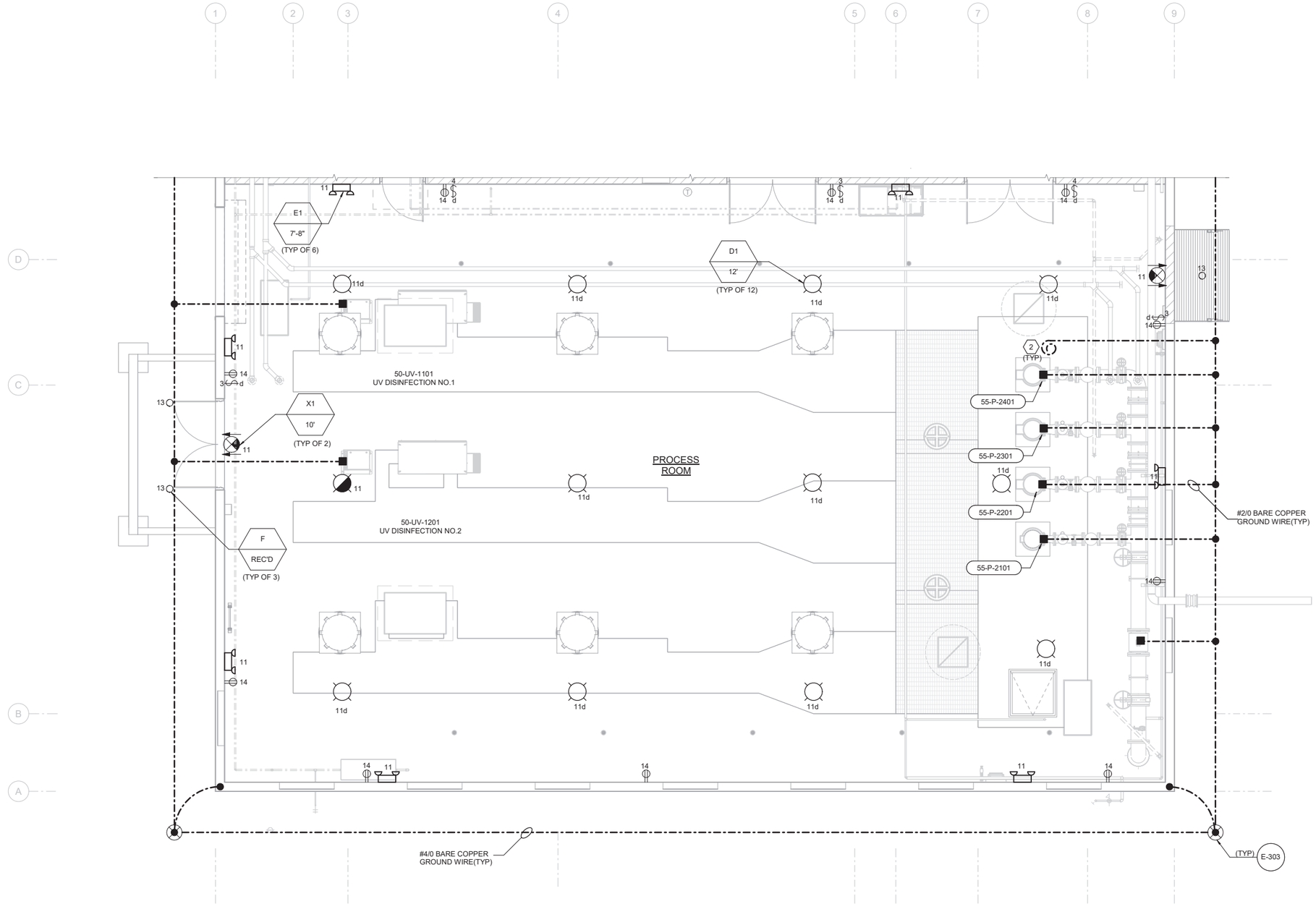

1 / 50-E-101 LIGHTING,RECEPTACLE AND GROUNDING PARTIAL PLAN - III

SCALE: 1/4" = 1'-0"

7/8/2022 6:09:36 PM
BIM 360://Spanish Fork and Mapleton WRF Design\55-20-124_50e-md.rvt

J-U-B ENGINEERS, INC.

J-U-B ENGINEERS, INC.
392. E. Winchester St., Suite 300
Salt Lake City, UT 84107
Phone: 801.547.0393
www.jub.com

Subconsultant:

Stantec
Stantec
2890 E Cottonwood Pkwy
Ste 300
Salt Lake City, UT 84121
Tel: 801.617.3200
www.stantec.com

AGENCY

REVIEW

REUSE OF DRAWINGS
J-U-B SHALL RETAIN ALL COMMON LAW, STATUTORY, COPYRIGHT AND OTHER RESERVED RIGHTS IN THESE DRAWINGS AND SPECIFICATIONS. THEY SHALL NOT BE REUSED WITHOUT J-U-B'S PRIOR WRITTEN CONSENT. ANY REUSE WITHOUT WRITTEN CONSENT BY J-U-B WILL BE AT CLIENT'S SOLE RISK AND WITHOUT LIABILITY OR LEGAL EXPOSURE TO J-U-B.

NO.	DESCRIPTION	BY	APP.	DATE
	REVISION			

SPANISH FORK & MAPLETON WRF
SPANISH FORK CITY CORPORATION

50 - UV DISINFECTION
LIGHTING,RECEPTACLE AND GROUNDING PARTIAL PLAN - III

FILE:
JUB PROJ. #: 55-20-124
DRAWN BY: TBD
DESIGN BY: KES
CHECKED BY:SK
ONE INCH
AT FULL SIZE. IF NOT ONE INCH, SCALE ACCORDINGLY
LAST UPDATED: 07/08/2022

DRAWING:
50-E-406

SHEET: 679 OF 691

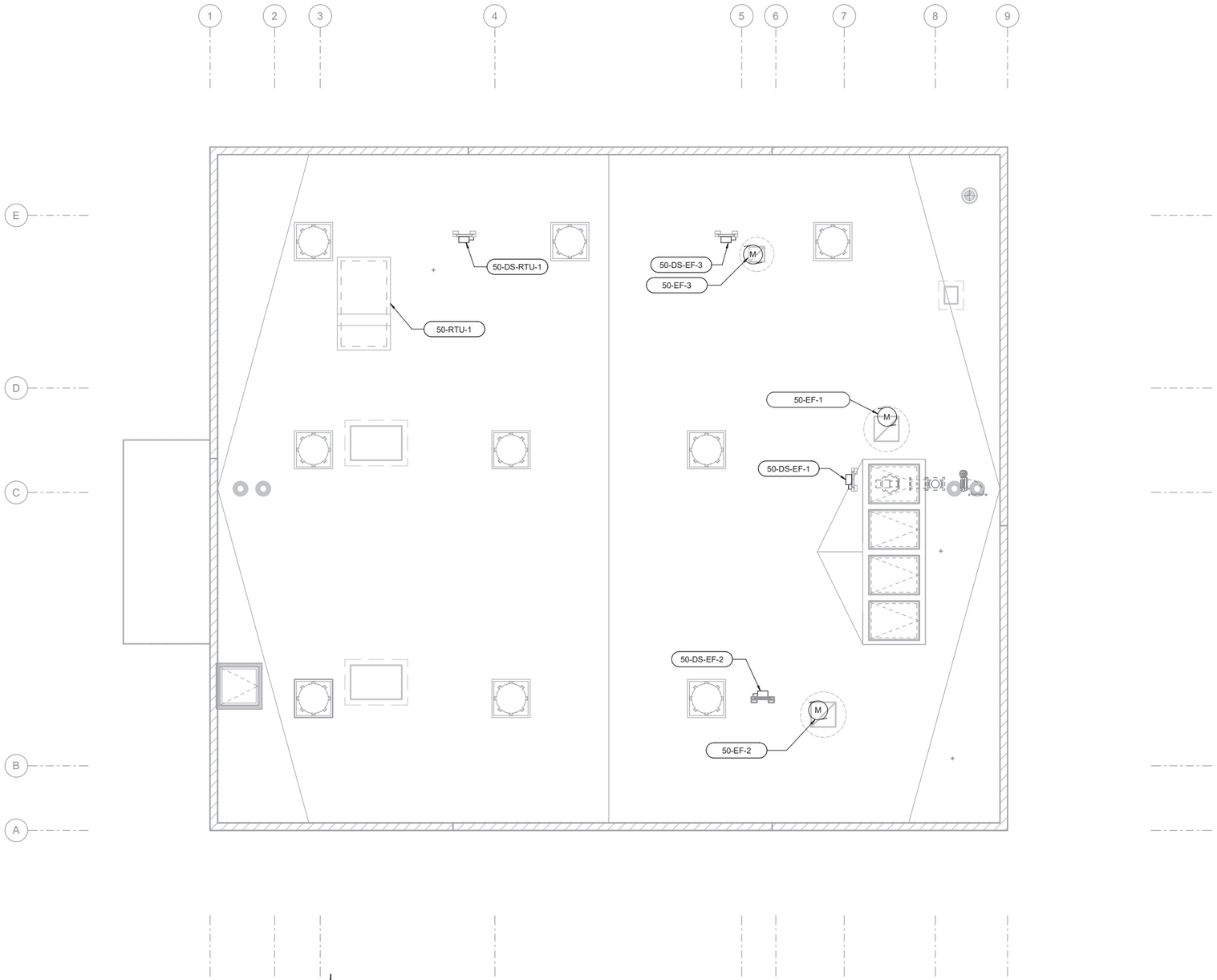

OVERALL ELECTRICAL ROOF PLAN

SCALE: 3/16" = 1'-0"

N

7/8/2022 6:09:37 PM
BIM 360://Spanish Fork and Mapleton WRF Design\55-20-124_50e-md.rvt

J-U-B ENGINEERS, INC.

J-U-B ENGINEERS, INC.
392. E. Winchester St., Suite 300
Salt Lake City, UT 84107
Phone: 801.547.0393
www.jub.com

Subconsultant:

Stantec

Stantec
2890 E Cottonwood Pkwy
Ste 300
Salt Lake City, UT 84121
Tel: 801.617.3200
www.stantec.com

AGENCY

REVIEW

REUSE OF DRAWINGS

J-U-B SHALL RETAIN ALL COMMON LAW, STATUTORY, COPYRIGHT AND OTHER RESERVED RIGHTS IN THESE DRAWINGS AND SPECIFICATIONS. THEY SHALL NOT BE REUSED WITHOUT J-U-B'S PRIOR WRITTEN CONSENT. ANY REUSE WITHOUT WRITTEN CONSENT BY J-U-B WILL BE AT CLIENT'S SOLE RISK AND WITHOUT LIABILITY OR LEGAL EXPOSURE TO J-U-B.

NO.	DESCRIPTION	BY	APP.	DATE
	REVISION			

SPANISH FORK & MAPLETON WRF
SPANISH FORK CITY CORPORATION

50 - UV DISINFECTION
OVERALL ELECTRICAL ROOF PLAN

FILE:
JUB PROJ. #: 55-20-124
DRAWN BY: TBD
DESIGN BY: KES
CHECKED BY:SK

ONE INCH
AT FULL SIZE. IF NOT ONE INCH, SCALE ACCORDINGLY

LAST UPDATED: 07/08/2022

DRAWING:
50-E-407

SHEET: 680 OF 691

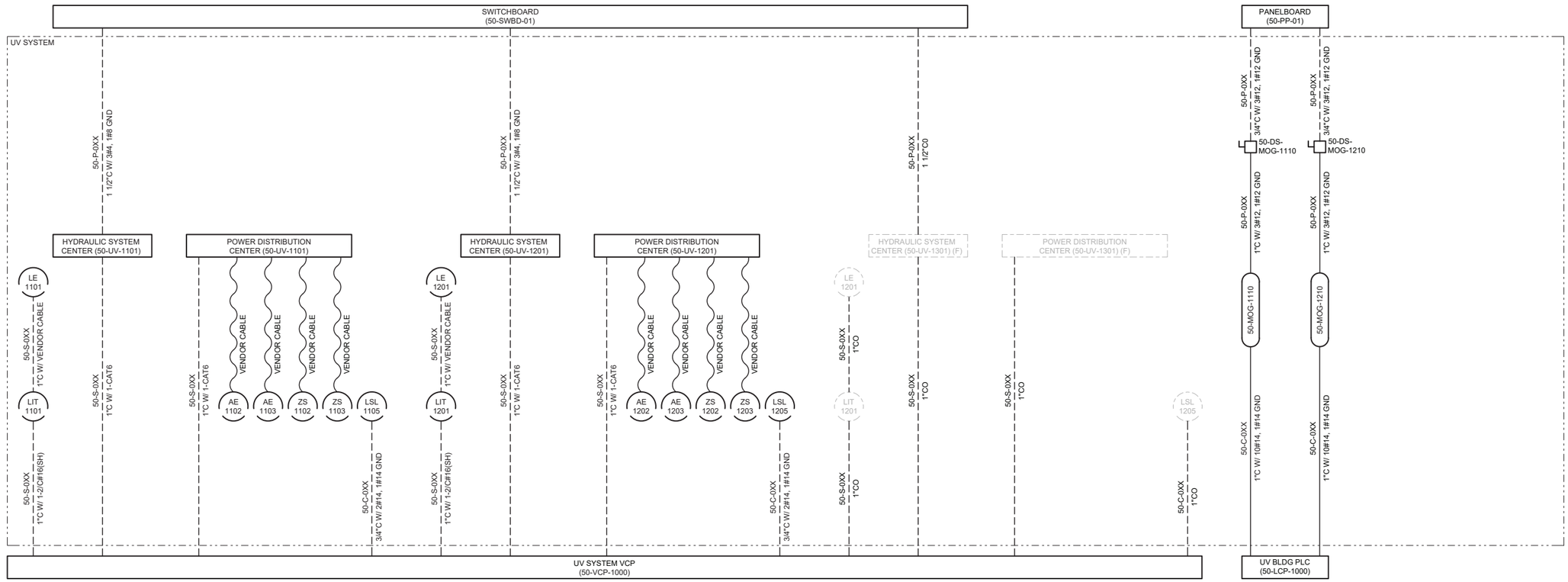

J-U-B ENGINEERS, INC.

J-U-B ENGINEERS, INC.
392. E. Winchester St., Suite 300
Salt Lake City, UT 84107
Phone: 801.547.0393
www.jub.com

Subconsultant:

Stantec

Stantec
2890 E Cottonwood Pkwy
Suite 300, Salt Lake City, Ut 84121
Tel: +1.801.617.3200
www.stantec.com

AGENCY

REVIEW

REUSE OF DRAWINGS:
J-U-B SHALL RETAIN ALL COMMON LAW, STATUTORY, COPYRIGHT AND OTHER RESERVED RIGHTS OF THESE DRAWINGS, AND THE SAME SHALL NOT BE REUSED WITHOUT J-U-B'S PRIOR WRITTEN CONSENT. ANY REUSE WITHOUT WRITTEN CONSENT BY J-U-B WILL BE AT CLIENT'S SOLE RISK AND WITHOUT LIABILITY OR LEGAL EXPOSURE TO J-U-B.

NO.	DESCRIPTION	BY	APP'L	DATE
	REVISION			

SPANISH FORK & MAPLETON WRF
SPANISH FORK CITY CORPORATION

50 - UV DISINFECTION
CONDUIT DEVELOPMENT - I

FILE :	55-20-124-50E-601
JUB PROJ. # :	55-20-124
DRAWN BY:	KES
DESIGN BY:	KES
CHECKED BY:	SK

ONE INCH
AT FULL SIZE, IF NOT ONE INCH, SCALE ACCORDINGLY

LAST UPDATED: 7/6/2022

DRAWING:
50-E-601

SHEET: 681 OF 691

Plot Date:7/6/2022 5:40 PM Plotted By: Thakare, Ashish
Date Created:7/6/2022 C:\PW_WORKING\WTR\ATHAKARE\D0202863\55-20-124-50E-601.DWG

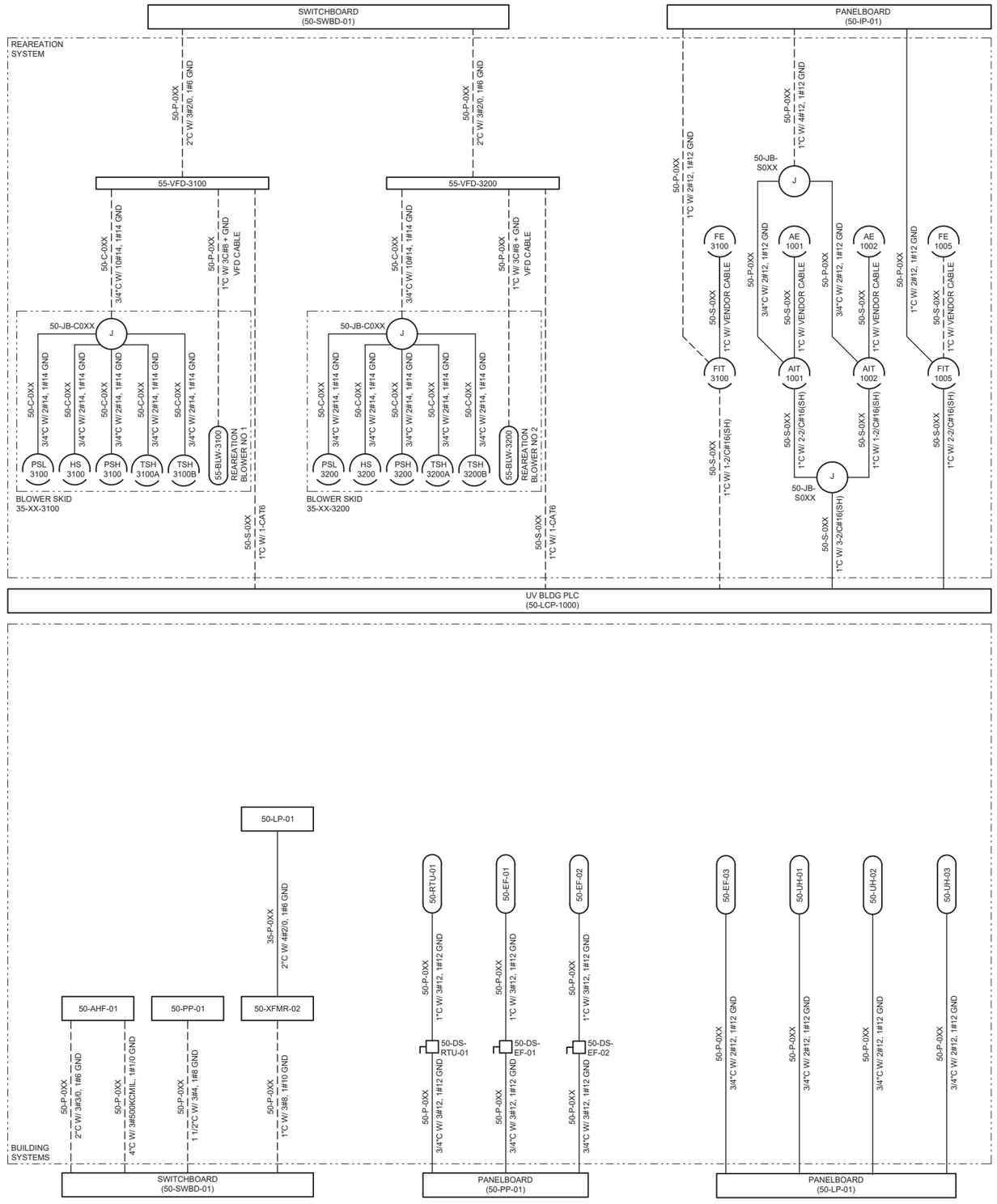

J-U-B ENGINEERS, INC.

J-U-B ENGINEERS, INC.
392. E. Winchester St., Suite 300
Salt Lake City, UT 84107
Phone: 801.547.0393
www.jub.com

Subconsultant:

Stantec

Stantec
2890 E Cottonwood Pkwy
Suite 300, Salt Lake City, Ut
84121
Tel: +1.801.617.3200
www.stantec.com

AGENCY

REVIEW

REUSE OF DRAWINGS:
J-U-B SHALL RETAIN ALL COMMON LAW, STATUTORY, COPYRIGHT AND OTHER RESERVED RIGHTS OF THESE DRAWINGS, AND THE SAME SHALL NOT BE REUSED WITHOUT J-U-B'S PRIOR WRITTEN CONSENT. ANY REUSE WITHOUT WRITTEN CONSENT BY J-U-B WILL BE AT CLIENTS SOLE RISK AND WITHOUT LIABILITY OR LEGAL EXPOSURE TO J-U-B.

NO.	DESCRIPTION	BY	APP'D	DATE
	REVISION			

SPANISH FORK & MAPLETON WRF
SPANISH FORK CITY CORPORATION

50 - UV DISINFECTION
CONDUIT DEVELOPMENT - II

FILE : 55-20-124-50E-602
JUB PROJ. # : 55-20-124
DRAWN BY: KES
DESIGN BY: KES
CHECKED BY: SK

ONE INCH
AT FULL SIZE, IF NOT ONE INCH, SCALE ACCORDINGLY

LAST UPDATED: 7/6/2022

DRAWING:
50-E-602

SHEET: 682 OF 691

Plot Date:7/6/2022 5:18 PM Plotted By: Thakare, Ashish
Date Created:7/6/2022 C:\PW_WORKING\WTR\ATHAKARE\D0202663\55-20-124-50E-602.DWG

PANELBOARD: 50-IP-01 **BUS AMPS:** 125 **VOLTS:** 208/120V
LOCATION: UV ELECTRICAL RM **MAIN BKR AMPS:** 100 **PHASE:** 3
MOUNTING: WALL **WIRE:** 4

LOAD DESCRIPTION	KVA A	KVA B	KVA C	CKT CTO	BKR INT		BKR INT	CKT CTO	KVA A	KVA B	KVA C	LOAD DESCRIPTION
50-FIT-2004	0.25			1	20		20	2	1.2			UV PLC (50-LCP-1000)
50-FIT-3100		0.25		3	20		20	4		0.0		SPARE
50-AIT-1001			0.25	5	20		20	6			0.0	SPARE
50-AIT-1002	0.25			7	20		20	8	0.0			SPARE
50-FIT-2005		0.25		9	20		20	10		0.0		SPARE
SPARE			0.0	11	20		20	12			0.0	SPARE
SPARE	0.0			13	20		20	14	0.0			SPARE
SPARE		0.0		15	20		20	16		0.0		SPARE
SPARE			0.0	17	20		20	18			0.0	SPARE
SPARE	0.0			19	20		20	20	0.0			SPARE
SPARE		0.0		21	20		20	22		0.0		SPARE
SPARE			0.0	23	20		20	24			0.0	SPARE
SPACE	0.0			25	-		-	26	0.0			SPACE
SPACE		0.0		27	-		-	28		0.0		SPACE
SPACE			0.0	29	-		-	30			0.0	SPACE
SPACE	0.0			31	-		-	32	0.0			SPACE
SPACE		0.0		33	-		-	34		0.0		SPACE
SPACE			0.0	35	-		-	36			0.0	SPACE
SPACE	0.0			37	-		-	38	0.0			SPACE
SPACE		0.0		39	-		-	40		0.0		SPACE
SPACE			0.0	41	-		-	42			0.0	SPACE
	0.5	0.5	0.25	TOTAL					1.2	0.0	0.0	
	PHASE LOAD			TOTAL LOAD								
	1.7	0.5	0.25	2.5	KVA		6.8	AMPS				

PANELBOARD: 50-LP-01 **BUS AMPS:** 125 **VOLTS:** 208/120V
LOCATION: UV ELECTRICAL RM **MAIN BKR AMPS:** 100 **PHASE:** 3
MOUNTING: WALL **WIRE:** 4

LOAD DESCRIPTION	KVA A	KVA B	KVA C	CKT CTO	BKR INT		BKR INT	CKT CTO	KVA A	KVA B	KVA C	LOAD DESCRIPTION
50-EF-02	0.7			1	20			2	3.33			
50-UH-02		0.5		3	20		30/3P	4		3.33		50-UPS-01
STORAGE RM LTS			0.23	5	20			6			3.33	
ELEC RM LTS	0.34			7	20		20	8	0.9			STORAGE RM RCPTS
BLWR RM LTS		0.29		9	20		20	10		1.26		ELEC RM RCPTS
PROCESS RM LTS			0.9	11	20		20	12			0.72	BLWR RM RCPTS
EXTERIOR LTS	0.07			13	20		20	14	1.44			PROCESS RM RCTPS
REAERATION BASIN LIGHT		0.04		15	20		20	16		0.0		EXTERIOR RCPTS
SITE LIGHT			0.04	17	20		20	18			0.0	SPARE
SPARE	0.0			19	20		20	20	0.0			SPARE
SPARE		0.0		21	20		20	22		0.0		SPARE
SPARE			0.0	23	20		20	24			0.0	SPARE
SPACE	-			25	-		-	26	-			SPACE
SPACE		-		27	-		-	28		-		SPACE
SPACE			-	29	-		-	30			-	SPACE
SPACE	-			31	-		-	32	-			SPACE
SPACE		-		33	-		-	34		-		SPACE
SPACE			-	35	-		-	36			-	SPACE
SPACE	-			37	-		-	38	-			SPACE
SPACE		-		39	-		-	40		-		SPACE
SPACE			-	41	-		-	42			-	SPACE
	1.11	0.83	1.17	TOTAL					5.67	4.59	4.05	
	PHASE LOAD			TOTAL LOAD								
	6.78	5.42	5.22	17.4	KVA		48.3	AMPS				

PANELBOARD: 50-PP-1 **BUS AMPS:** 200 **VOLTS:** 480 V
LOCATION: UV ELECTRICAL RM **MAIN BKR AMPS:** 100 **PHASE:** 3
MOUNTING: WALL **WIRE:** 3

LOAD DESCRIPTION	KVA A	KVA B	KVA C	CKT CTO	BKR INT		BKR INT	CKT CTO	KVA A	KVA B	KVA C	LOAD DESCRIPTION
	0.5			1				2	4.2			
50-MOG-1110		0.5		3	20/3P		20/3P	4		4.2		50-RTU-01
			0.5	5				6			4.2	
	0.5			7				8	0.4			
50-MOG-1112		0.5		9	20/3P		20/3P	10		0.4		50-EF-01
			0.5	11				12			0.4	
	0.4			13				14	0.3			
50-EF-01		0.4		15	20/3P		20/3P	16		0.3		50-UH-01
			0.4	17				18			0.3	
	0.3			19				20	0.0			
50-UH-01		0.3		21	20/3P		20/3P	22		0.0		SPARE
			0.3	23				24			0.0	
	0.0			25				26	0.0			
SPARE		0.0		27	20/3P		20/3P	28		0.0		SPARE
			0.0	29				30			0.0	
	0.0			31				32	0.0			
SPARE		0.0		33	20/3P		20/3P	34		0.0		SPARE
			0.0	35				36			0.0	
	0.0			37				38	0.0			
SPARE		0.0		39	20/3P		20/3P	40		0.0		SPARE
			0.0	41				42			0.0	
	1.7	1.7	1.7	TOTAL					4.9	4.9	4.9	
	PHASE LOAD			TOTAL LOAD								
	6.6	6.6	6.6	19.8	KVA		23.8	AMPS				

J-U-B ENGINEERS, INC.
J-U-B ENGINEERS, INC.
392 E. Winchester St., Suite 300
Salt Lake City, UT 84107
Phone: 801.547.0393
www.jub.com

Subconsultant:
Stantec
Stantec
2890 E Cottonwood Pkwy
Suite 300, Salt Lake City, Ut 84121
Tel: +1.801.617.3200
www.stantec.com

AGENCY

REVIEW

REUSE OF DRAWINGS
J-U-B SHALL RETAIN ALL COMMON LAW, STATUTORY, COPYRIGHT AND OTHER RESERVED RIGHTS OF THESE DRAWINGS, AND THE SAME SHALL NOT BE REUSED WITHOUT J-U-B'S PRIOR WRITTEN CONSENT. ANY REUSE WITHOUT WRITTEN CONSENT BY J-U-B WILL BE AT CLIENTS SOLE RISK AND WITHOUT LIABILITY OR LEGAL EXPOSURE TO J-U-B.

NO.	DESCRIPTION	BY	APP'L	DATE
	REVISION			

SPANISH FORK & MAPLETON WRF
SPANISH FORK CITY CORPORATION

50 - UV DISINFECTION
PANEL SCHEDULES

FILE : 55-20-124-50E-610
JUB PROJ. # : 55-20-124
DRAWN BY: KES
DESIGN BY: KES
CHECKED BY: SK
ONE INCH
AT FULL SIZE, IF NOT ONE INCH, SCALE ACCORDINGLY
LAST UPDATED: 7/6/2022

DRAWING:
50-E-610

SHEET: 683 OF 691

Plot Date:7/6/2022 5:41 PM Plotted By: Thakare, Ashish
Date Created:7/6/2022 C:\FW_WORKING\WTR\ATHAKARE\D0202863\55-20-124-50E-610.DWG

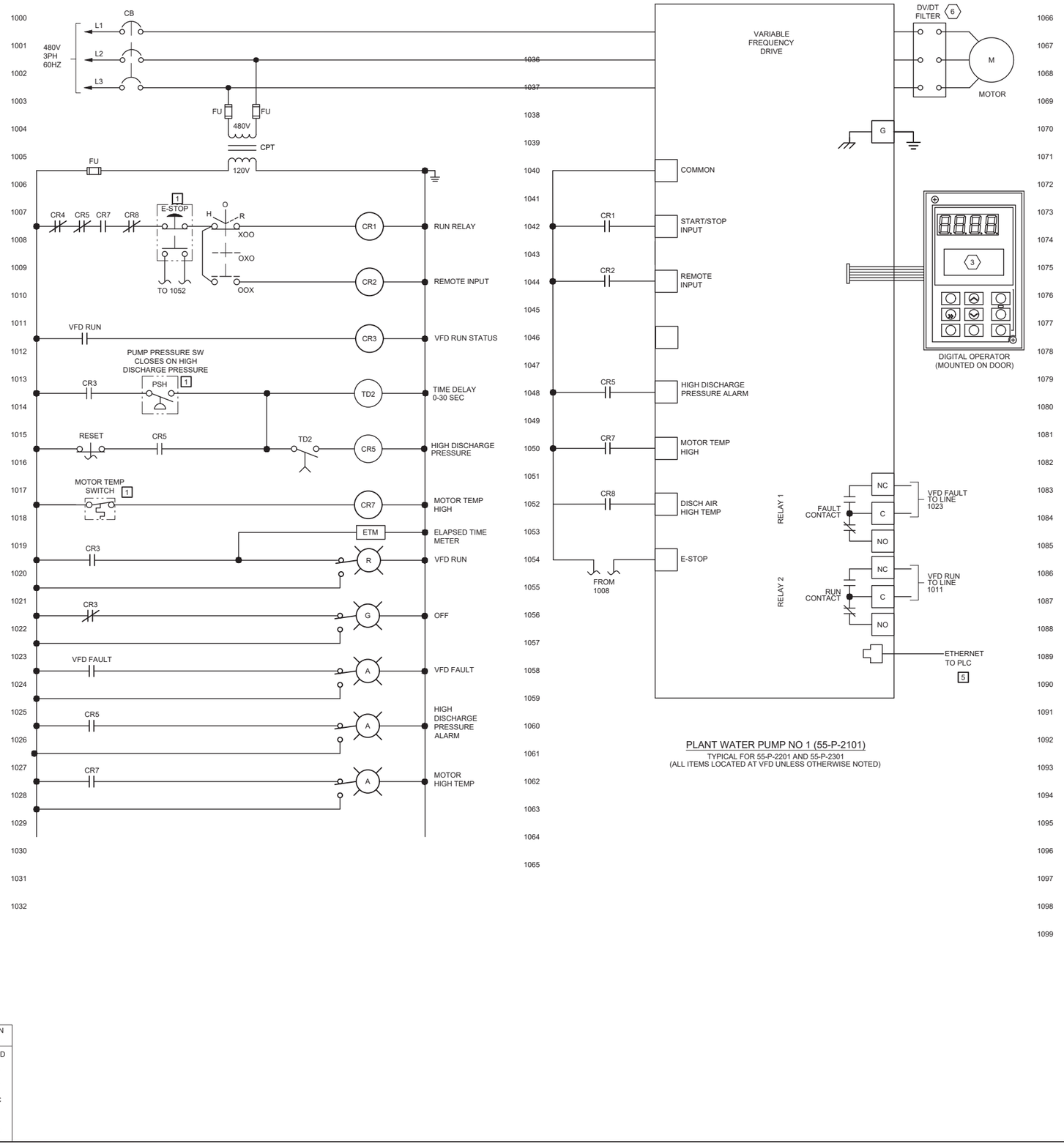

PLANT WATER PUMP NO 1 (55-P-2101)

TYPICAL FOR 55-P-2201 AND 55-P-2301
(ALL ITEMS LOCATED AT VFD UNLESS OTHERWISE NOTED)

LOCATION LEGEND	
1	FIELD
2	LCS
3	LCP
4	MCC
5	PLC
6	VFD

SHEET KEYNOTES

3	FOR VFD DIGITAL OPERATOR INTERFACE REFER TO P&ID'S.
6	PROVIDE FILTERS IF RECOMMENDED BY VFD MANUFACTURER. FILTER TO BE LOCATED INSIDE VFD ENCLOSURE.

J-U-B ENGINEERS, INC.

J-U-B ENGINEERS, INC.
392. E. Winchester St., Suite 300
Salt Lake City, UT 84107
Phone: 801.547.0393
www.jub.com

Subconsultant:

Stantec

Stantec
2890 E Cottonwood Pkwy
Suite 300, Salt Lake City, Ut
84121
Tel: +1.801.617.3200
www.stantec.com

AGENCY

REVIEW

REUSE OF DRAWINGS
J-U-B SHALL RETAIN ALL COMMON LAW, STATUTORY, COPYRIGHT AND OTHER RESERVED RIGHTS OF THESE DRAWINGS, AND THE SAME SHALL NOT BE REUSED WITHOUT J-U-B'S PRIOR WRITTEN CONSENT. ANY REUSE WITHOUT WRITTEN CONSENT BY J-U-B WILL BE AT CLIENTS SOLE RISK AND WITHOUT LIABILITY OR LEGAL EXPOSURE TO J-U-B.

NO.	DESCRIPTION	BY	APP'L	DATE
	REVISION			

SPANISH FORK & MAPLETON WRF
SPANISH FORK CITY CORPORATION

50 - UV DISINFECTION
CONTROL SCHEMATICS - I

FILE : 55-20-124-50E-611
JUB PROJ. # : 55-20-124
DRAWN BY: KES
DESIGN BY: KES
CHECKED BY: SK

ONE INCH
AT FULL SIZE, IF NOT ONE INCH, SCALE ACCORDINGLY

LAST UPDATED: 7/6/2022

DRAWING:
50-E-611

SHEET: 684 OF 691

Plot Date:7/6/2022 5:18 PM Plotted By: Thakare, Ashish
Date Created:7/6/2022 C:\PW_WORKING\WTR\ATHAKARE\D0202863\55-20-124-50E-611.DWG

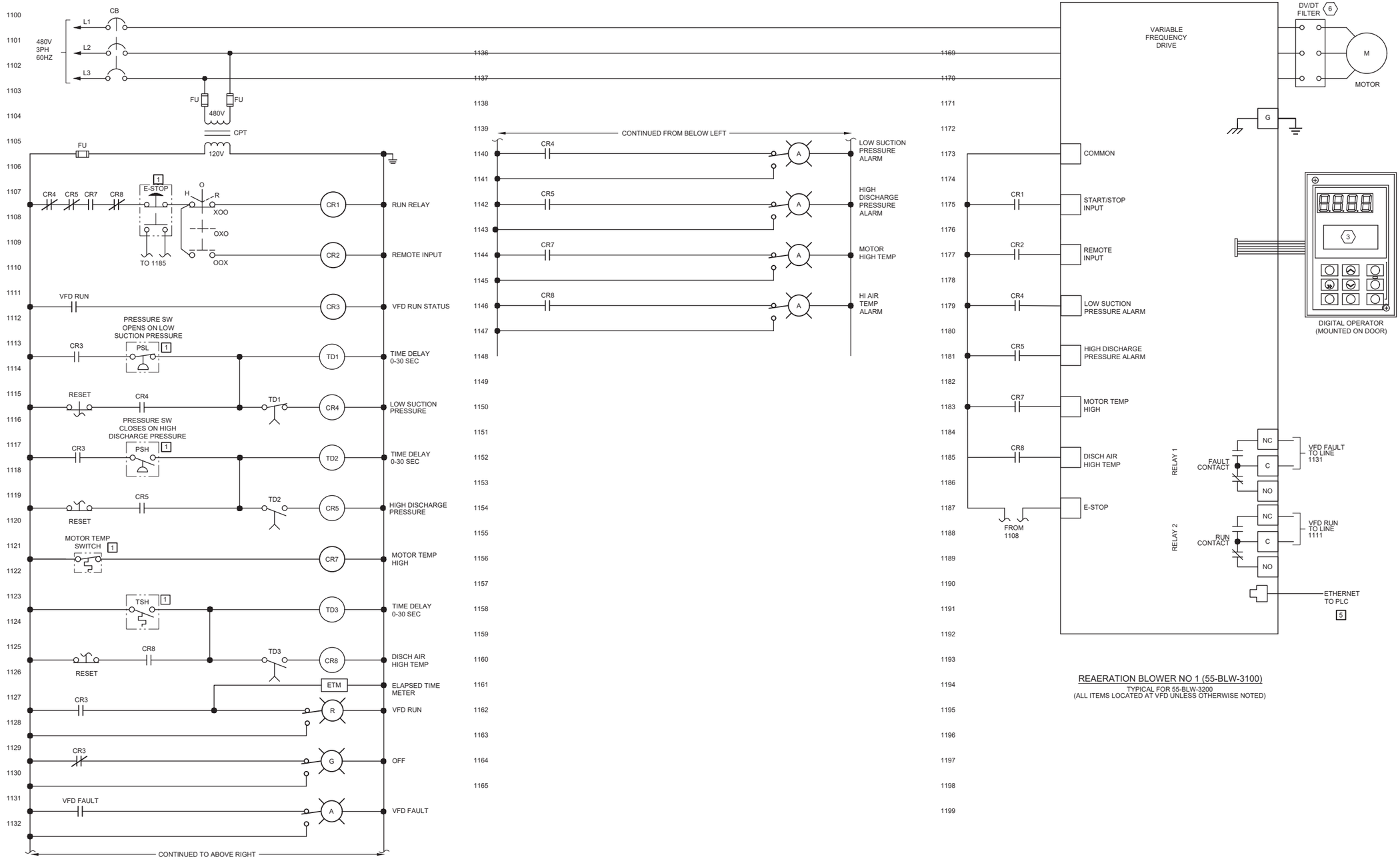

REAERATION BLOWER NO 1 (55-BLW-3100)

TYPICAL FOR 55-BLW-3200
(ALL ITEMS LOCATED AT VFD UNLESS OTHERWISE NOTED)

LOCATION LEGEND	
1	FIELD
2	LCS
3	LCP
4	MCC
5	PLC
6	VFD

SHEET KEYNOTES

3	FOR VFD DIGITAL OPERATOR INTERFACE REFER TO P&ID'S.
6	PROVIDE FILTERS IF RECOMMENDED BY VFD MANUFACTURER. FILTER TO BE LOCATED INSIDE VFD ENCLOSURE.

J-U-B ENGINEERS, INC.

J-U-B ENGINEERS, INC.
392. E. Winchester St., Suite 300
Salt Lake City, UT 84107
Phone: 801.547.0393
www.jub.com

Subconsultant:

Stantec
Stantec
2890 E Cottonwood Pkwy
Suite 300, Salt Lake City, Ut 84121
Tel: +1.801.617.3200
www.stantec.com

AGENCY

REVIEW

REUSE OF DRAWINGS
J-U-B SHALL RETAIN ALL COMMON LAW, STATUTORY, COPYRIGHT AND OTHER RESERVED RIGHTS OF THESE DRAWINGS, AND THE SAME SHALL NOT BE REUSED WITHOUT J-U-B'S PRIOR WRITTEN CONSENT. ANY REUSE WITHOUT WRITTEN CONSENT BY J-U-B WILL BE AT CLIENTS SOLE RISK AND WITHOUT LIABILITY OR LEGAL EXPOSURE TO J-U-B.

NO.	DESCRIPTION	BY	APP'L	DATE
	REVISION			

SPANISH FORK & MAPLETON WRF
SPANISH FORK CITY CORPORATION

50 - UV DISINFECTION
CONTROL SCHEMATICS - II

FILE :	55-20-124-50E-612
JUB PROJ. # :	55-20-124
DRAWN BY:	KES
DESIGN BY:	KES
CHECKED BY:	SK
	ONE INCH AT FULL SIZE, IF NOT ONE INCH, SCALE ACCORDINGLY
LAST UPDATED:	7/6/2022

DRAWING:
50-E-612

SHEET: 685 OF 691

Plot Date:7/6/2022 5:41 PM Plotted By: Thakare, Ashish
Date Created:7/6/2022 C:\PW_WORKING\WTR\ATHAKARE\D0202663\55-20-124-50E-612.DWG

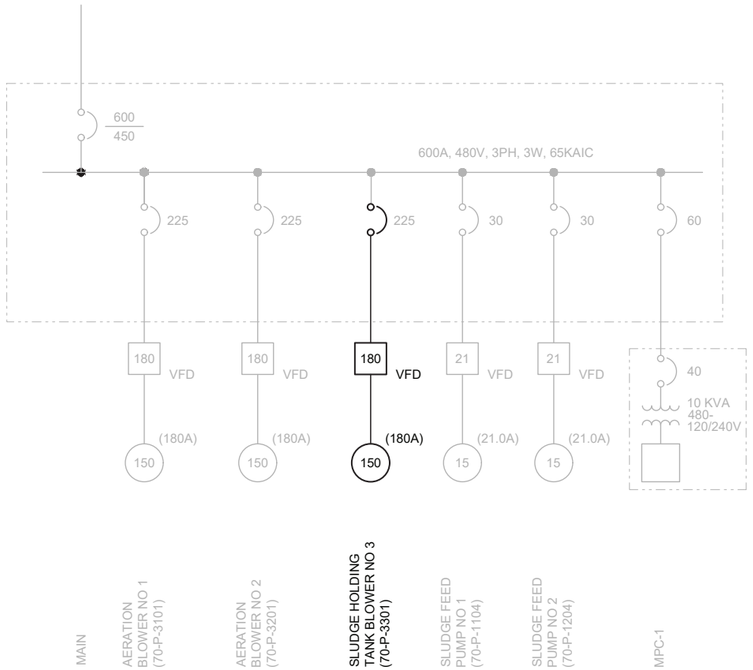

SWBD-BL

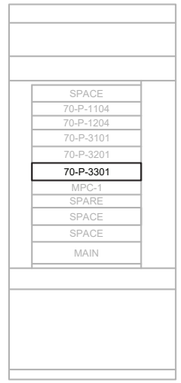

SWBD-BL ELEVATION

120/240 VOLTS 60 A MAIN BREAKER			1 PH 3 W 100 A					PANELBOARD: MPC-1 LOCATION: DIGESTER BUILDING						FEED: PNL-BL MOUNTING: SURFACE			
LOAD DESCRIPTION	KVA		LTG	REC	MIS	CIR	BKR		BKR	CIR	MIS	REC	LTG	KVA		LOAD DESCRIPTION	
	PH A	PH B												PH A	PH B		
* 70-P-3101 FANS CKT 1	1.59					3	1	20		20	2	3			1.59		70-P-3201 FANS CKT 1	*
* 70-P-3101 FANS CKT 2		1.59				3	3	20		20	4	3				1.59	70-P-3201 FANS CKT 2	*
* 70-P-3301 FANS CKT 1	-					3	5	20		20	6				0.25		ETHERNET SWITCH	
* 70-P-3301 FANS CKT 2		-				3	7	20		30	8					2.39	EC-1	
SPARE	0.0					9	20			20	10				0.0		SPARE	
	1.59	1.59				TOTAL				TOTAL					1.84	3.98		
	PHASE LOAD		TOTAL LOAD											PROVIDE: 40A PRIMARY BREAKER AND 60A SECONDARY BREAKER WITH 10KVA, 480V-240/120V, 1PH, 3W XFMR				
	3.43	5.57	9.00 KVA															

* - ONLY 4 OF 6 CIRCUITS TO OPERATE SIMULTANE0USLY

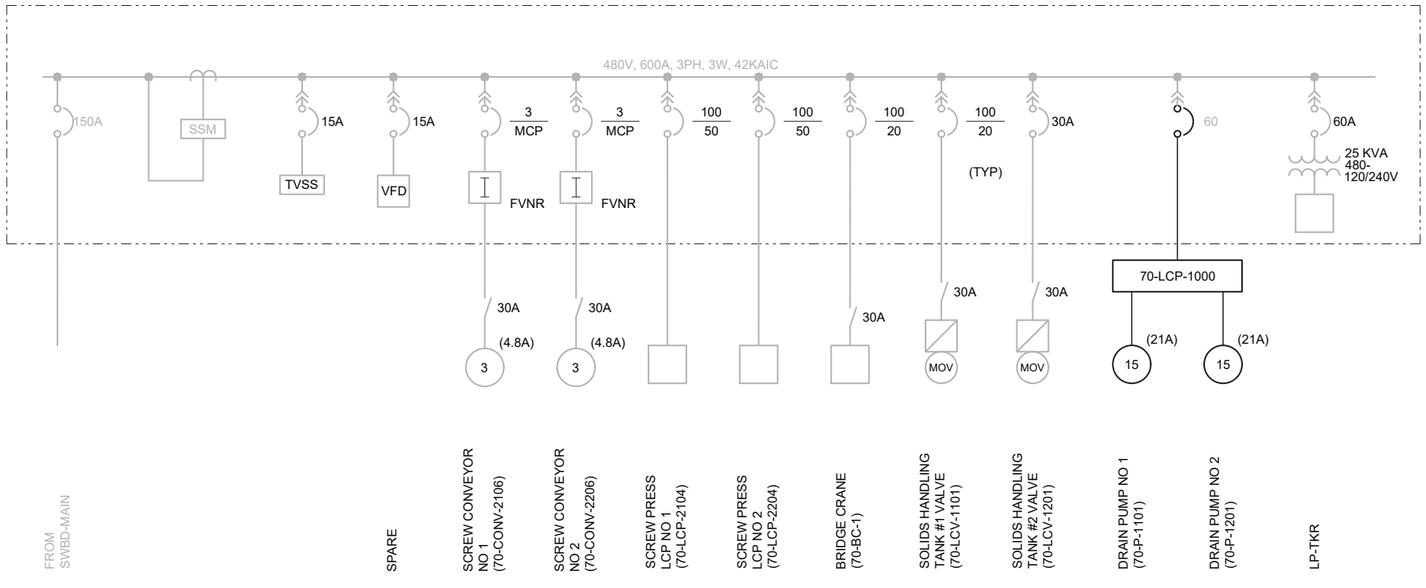

TKR-MCC

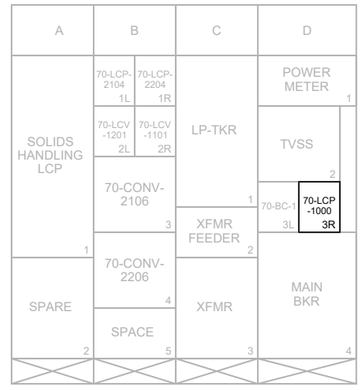

TKR-MCC ELEVATION (NEW)

J-U-B ENGINEERS, INC.

J-U-B ENGINEERS, INC.
392. E. Winchester St., Suite 300
Salt Lake City, UT 84107
Phone: 801.547.0393
www.jub.com

Subconsultant:

Stantec
2890 E Cottonwood Pkwy
Suite 300, Salt Lake City, Ut 84121
Tel: +1.801.617.3200
www.stantec.com

AGENCY

REVIEW

REUSE OF DRAWINGS
J-U-B SHALL RETAIN ALL COMMON LAW, STATUTORY, COPYRIGHT AND OTHER RESERVED RIGHTS OF THESE DRAWINGS, AND THE SAME SHALL NOT BE REUSED WITHOUT J-U-B'S PRIOR WRITTEN CONSENT. ANY REUSE WITHOUT WRITTEN CONSENT BY J-U-B WILL BE AT CLIENTS SOLE RISK AND WITHOUT LIABILITY OR LEGAL EXPOSURE TO J-U-B.

NO.	DESCRIPTION	BY	APP'D	DATE
	REVISION			

SPANISH FORK & MAPLETON WRF
SPANISH FORK CITY CORPORATION

70 - EXISTING WRF
SINGLE LINE DIAGRAM

FILE : 55-20-124-70E-001
JUB PROJ. # : 55-20-124
DRAWN BY: KES
DESIGN BY: KES
CHECKED BY: SK

ONE INCH
AT FULL SIZE, IF NOT ONE INCH, SCALE ACCORDINGLY

LAST UPDATED: 7/5/2022

DRAWING:
70-E-001

SHEET: 686 OF 691

Plot Date:7/6/2022 7:02 AM Plotted By: Smith, Keith
Date Created:7/5/2022 C:\PW_WORKING\WTR\KEISMITH\D0222734\55-20-124-70E-001.DWG



SHEET KEYNOTES

A. LOCATE THE PRESSURE TRANSMITTER ON THE STAIRWAY LEG NEXT TO EXISTING TRANSMITTER PIT-3103.

B. ROUTE CONDUIT SOUTH ON STAIRWAY FRAME THEN DOWN TO GROUND AND CONTINUE CONDUIT IN DUCTBANK TO DEWATERING BUILDING.

C. ROUTE CONDUIT UP STAIRWAY STRUCTURE TO LEVEL TRANSMITTERS ON TOP LEVEL.

0 20 40
SCALE IN FEET

J-U-B ENGINEERS, INC.

J-U-B ENGINEERS, INC.
392. E. Winchester St., Suite 300
Salt Lake City, UT 84107
Phone: 801.547.0393
www.jub.com

Subconsultant:

Stantec
Stantec
2890 E Cottonwood Pkwy
Suite 300, Salt Lake City, Ut 84121
Tel: +1.801.617.3200
www.stantec.com

AGENCY

REVIEW

REUSE OF DRAWINGS
J-U-B SHALL RETAIN ALL COMMON LAW, STATUTORY, COPYRIGHT AND OTHER RESERVED RIGHTS OF THESE DRAWINGS, AND THE SAME SHALL NOT BE REUSED WITHOUT J-U-B'S PRIOR WRITTEN CONSENT. ANY REUSE WITHOUT WRITTEN CONSENT BY J-U-B WILL BE AT CLIENTS SOLE RISK AND WITHOUT LIABILITY OR LEGAL EXPOSURE TO J-U-B.

NO.	DESCRIPTION	BY	APP.	DATE
	REVISION			

SPANISH FORK & MAPLETON WRF
SPANISH FORK CITY CORPORATION

70 EXISTING WRF
SITE PLAN

FILE : 55-20-124-70E-101
JUB PROJ. # : 55-20-124
DRAWN BY: KES
DESIGN BY: KES
CHECKED BY: SK
ONE INCH
AT FULL SIZE, IF NOT ONE INCH, SCALE ACCORDINGLY
LAST UPDATED: 7/5/2022

DRAWING:
70-E-101

SHEET: 687 OF 691

Plot Date:7/6/2022 7:02 AM Plotted By: Smith, Keith
Date Created:7/5/2022 C:\PW_WORKING\WTR\KESMITH\D0222734\55-20-124-70E-101.DWG

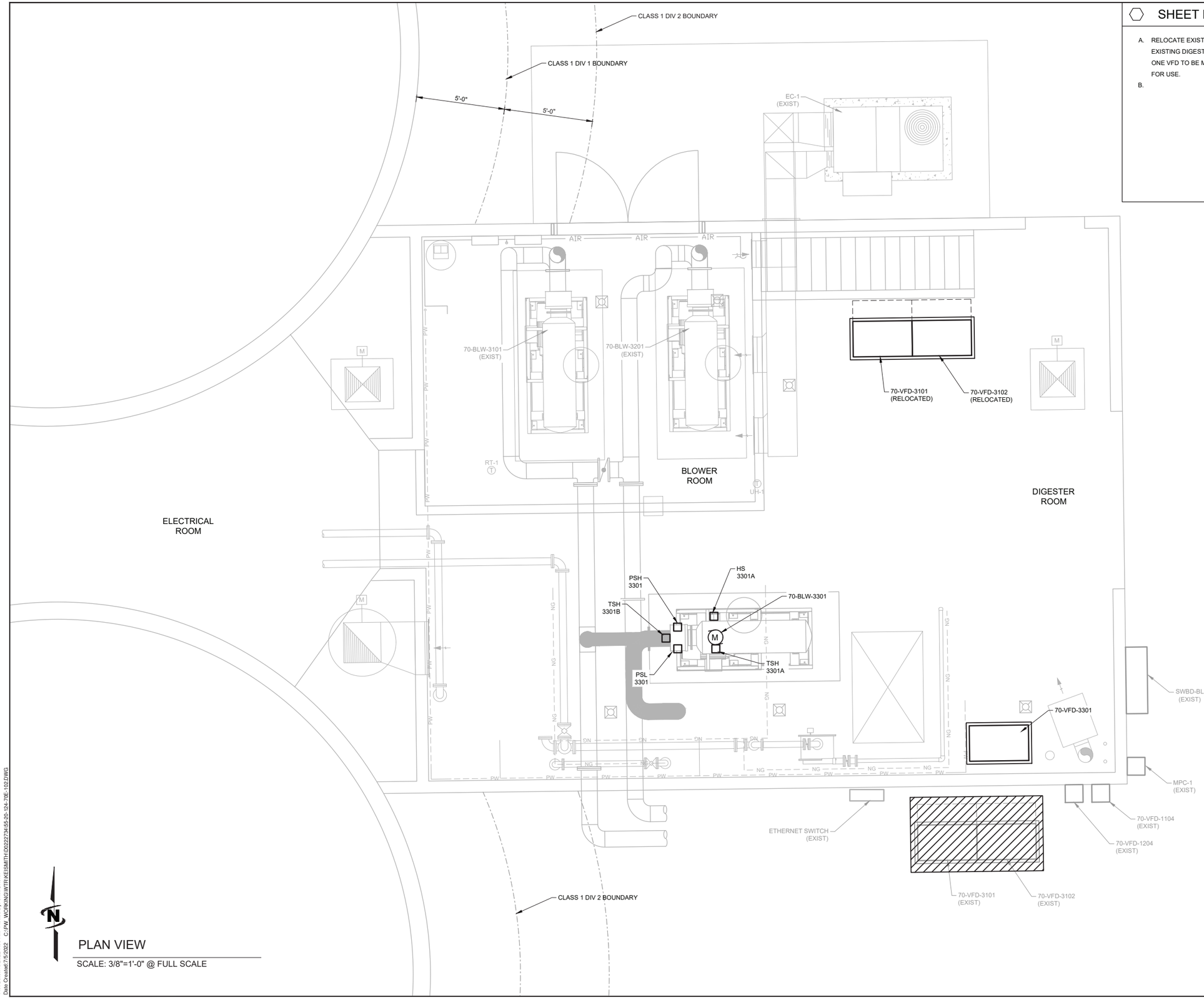

SHEET KEYNOTES

A. RELOCATE EXISTING VFDS OUTSIDE INTO THE BUILDING AFTER DEMOLITION OF EXISTING DIGESTER EQUIPMENT AND AFTER NEW BLOWER IS OPERATIONAL. ONLY ONE VFD TO BE MOVED AT A TIME SUCH THAT TWO BLOWERS ARE ALWAYS AVAILABLE FOR USE.

B.

PLAN VIEW

SCALE: 3/8"=1'-0" @ FULL SCALE

J-U-B ENGINEERS, INC.

J-U-B ENGINEERS, INC.
392. E. Winchester St., Suite 300
Salt Lake City, UT 84107
Phone: 801.547.0393
www.jub.com

Subconsultant:

Stantec
Stantec
2890 E Cottonwood Pkwy
Suite 300, Salt Lake City, Ut
84121
Tel: +1.801.617.3200
www.stantec.com

AGENCY

REVIEW

REUSE OF DRAWINGS
J-U-B SHALL RETAIN ALL COMMON LAW, STATUTORY, COPYRIGHT AND OTHER RESERVED RIGHTS OF THESE DRAWINGS, AND THE SAME SHALL NOT BE REUSED WITHOUT J-U-B'S PRIOR WRITTEN CONSENT. ANY REUSE WITHOUT WRITTEN CONSENT BY J-U-B WILL BE AT CLIENTS SOLE RISK AND WITHOUT LIABILITY OR LEGAL EXPOSURE TO J-U-B.

NO.	DESCRIPTION	BY	APP.	DATE
	REVISION			

SPANISH FORK & MAPLETON WRF
SPANISH FORK CITY CORPORATION

70 - EXISTING WRF
DIGESTER CONTROL BUILDING
EQUIPMENT LOCATION PLAN

FILE : 55-20-124-70E-102
JUB PROJ. # : 55-20-124
DRAWN BY: KES
DESIGN BY: KES
CHECKED BY: SK

ONE INCH
AT FULL SIZE, IF NOT ONE INCH, SCALE ACCORDINGLY

LAST UPDATED: 7/5/2022

DRAWING:
70-E-102

SHEET: 688 OF 691

Plot Date:7/6/2022 7:03 AM Plotted By: Smith, Keith
Date Created:7/5/2022 C:\PW_WORKING\WTR\KEISMITH1\D0222734\55-20-124-70E-102.DWG

SHEET KEYNOTES

A. INTERIOR OF TANK IS A CLASS 1 DIV 1 SPACE.

B. MOUNT LEVEL TRANSMITTERS TO PLATFORM HANDRAIL AT TOP.

CLASSIFIED AREA BOUNDARY

SOLIDS HOLDING TANK
(A)

10'-0"

LE-1101

LE-1102

LIT-1101

LIT-1102
(B)

A

PLAN VIEW

SCALE: 1/4"=1'-0" @ FULL SCALE

(A) CLASS 1 DIV 2 BOUNDARY

CLASS1 DIV 2 BOUNDARY
(A)

A CLASSIFIED BOUNDARY SECTION

J-U-B ENGINEERS, INC.

J-U-B ENGINEERS, INC.
392. E. Winchester St., Suite 300
Salt Lake City, UT 84107
Phone: 801.547.0393
www.jub.com

Subconsultant:

Stantec

Stantec
2890 E Cottonwood Pkwy
Suite 300, Salt Lake City, Ut
84121
Tel: +1.801.617.3200
www.stantec.com

AGENCY

REVIEW

REUSE OF DRAWINGS
J-U-B SHALL RETAIN ALL COMMON LAW, STATUTORY, COPYRIGHT AND OTHER RESERVED RIGHTS OF THESE DRAWINGS, AND THE SAME SHALL NOT BE REUSED WITHOUT J-U-B'S PRIOR WRITTEN CONSENT. ANY REUSE WITHOUT WRITTEN CONSENT BY J-U-B WILL BE AT CLIENTS SOLE RISK AND WITHOUT LIABILITY OR LEGAL EXPOSURE TO J-U-B.

NO.	DESCRIPTION	BY	APP.	DATE
	REVISION			

SPANISH FORK & MAPLETON WRF
SPANISH FORK CITY CORPORATION

70 EXISTING WRF
SOLIDS HOLDING TANK
EQUIPMENT LOCATION PLAN

FILE :	55-20-124-70E-103
JUB PROJ. # :	55-20-124
DRAWN BY:	KES
DESIGN BY:	KES
CHECKED BY:	SK

ONE INCH
AT FULL SIZE, IF NOT ONE INCH, SCALE ACCORDINGLY

LAST UPDATED: 7/5/2022

DRAWING:
70-E-103

SHEET: 689 OF 691

Plot Date:7/6/2022 7:03 AM Plotted By: Smith, Keith
Date Created:7/5/2022 C:\PW_WORKING\WTR\KEISMITH\D0222734\55-20-124-70E-103.DWG

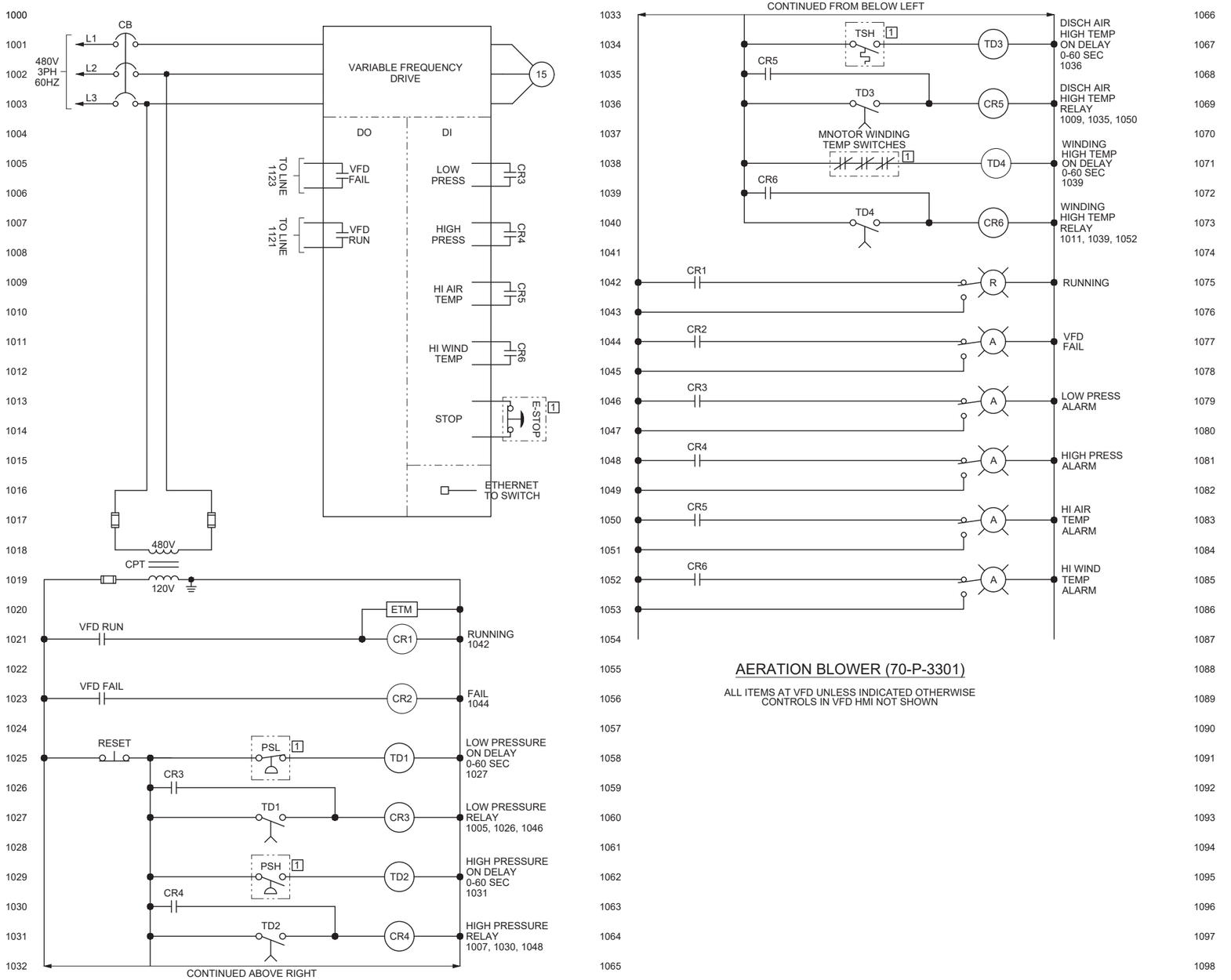

AERATION BLOWER (70-P-3301)

ALL ITEMS AT VFD UNLESS INDICATED OTHERWISE
CONTROLS IN VFD HMI NOT SHOWN

LOCATION LEGEND	
1	FIELD
2	LCS
3	LCP
4	MCC
5	PLC

J-U-B ENGINEERS, INC.

J-U-B ENGINEERS, INC.
392. E. Winchester St., Suite 300
Salt Lake City, UT 84107
Phone: 801.547.0393
www.jub.com

Subconsultant:

Stantec
Stantec
2890 E Cottonwood Pkwy
Suite 300, Salt Lake City, Ut 84121
Tel: +1.801.617.3200
www.stantec.com

AGENCY

REVIEW

REUSE OF DRAWINGS
J-U-B SHALL RETAIN ALL COMMON LAW, STATUTORY, COPYRIGHT AND OTHER RESERVED RIGHTS OF THESE DRAWINGS, AND THE SAME SHALL NOT BE REUSED WITHOUT J-U-B'S PRIOR WRITTEN CONSENT. ANY REUSE WITHOUT WRITTEN CONSENT BY J-U-B WILL BE AT CLIENTS SOLE RISK AND WITHOUT LIABILITY OR LEGAL EXPOSURE TO J-U-B.

NO.	DESCRIPTION	BY	APP'D	DATE
	REVISION			

SPANISH FORK & MAPLETON WRF
SPANISH FORK CITY CORPORATION

95 - EXISTING WRF SCHEMATICS

FILE : 55-20-124-70E-601
JUB PROJ. # : 55-20-124
DRAWN BY: KES
DESIGN BY: KES
CHECKED BY: SK

ONE INCH
AT FULL SIZE, IF NOT ONE INCH, SCALE ACCORDINGLY

LAST UPDATED: 7/5/2022

DRAWING:
70-E-601

SHEET: 690 OF 691

Plot Date:7/6/2022 7:03 AM Plotted By: Smith, Keith
Date Created:7/5/2022 C:\PW_WORKING\WTR\KEISMITH\D0222734\55-20-124-70E-601.DWG

J-U-B ENGINEERS, INC.

J-U-B ENGINEERS, INC.
392. E. Winchester St., Suite 300
Salt Lake City, UT 84107
Phone: 801.547.0393
www.jub.com

Subconsultant:

Stantec
2890 E Cottonwood Pkwy
Suite 300, Salt Lake City, Ut
84121
Tel: +1.801.617.3200
www.stantec.com

AGENCY

REVIEW

REUSE OF DRAWINGS
J-U-B SHALL RETAIN ALL COMMON LAW, STATUTORY, COPYRIGHT AND OTHER RESERVED RIGHTS OF THESE DRAWINGS, AND THE SAME SHALL NOT BE REUSED WITHOUT J-U-B'S PRIOR WRITTEN CONSENT. ANY REUSE WITHOUT WRITTEN CONSENT BY J-U-B WILL BE AT CLIENTS SOLE RISK AND WITHOUT LIABILITY OR LEGAL EXPOSURE TO J-U-B.

NO.	DESCRIPTION	BY	APP'D	DATE
	REVISION			

SPANISH FORK & MAPLETON WRF
SPANISH FORK CITY CORPORATION

95 - EXISTING WRF
CONDUIT DEVELOPMENT

FILE : 55-20-124-70E-602
JUB PROJ. # : 55-20-124
DRAWN BY: KES
DESIGN BY: KES
CHECKED BY: SK

ONE INCH
AT FULL SIZE, IF NOT ONE INCH, SCALE ACCORDINGLY

LAST UPDATED: 7/5/2022

DRAWING:
70-E-602

SHEET: 691 OF 691

Plot Date:7/6/2022 7:03 AM Plotted By: Smith, Keith
Date Created:7/5/2022 C:\PW_WORKING\WTR\KEISMITH\D0222734\55-20-124-70E-602.DWG