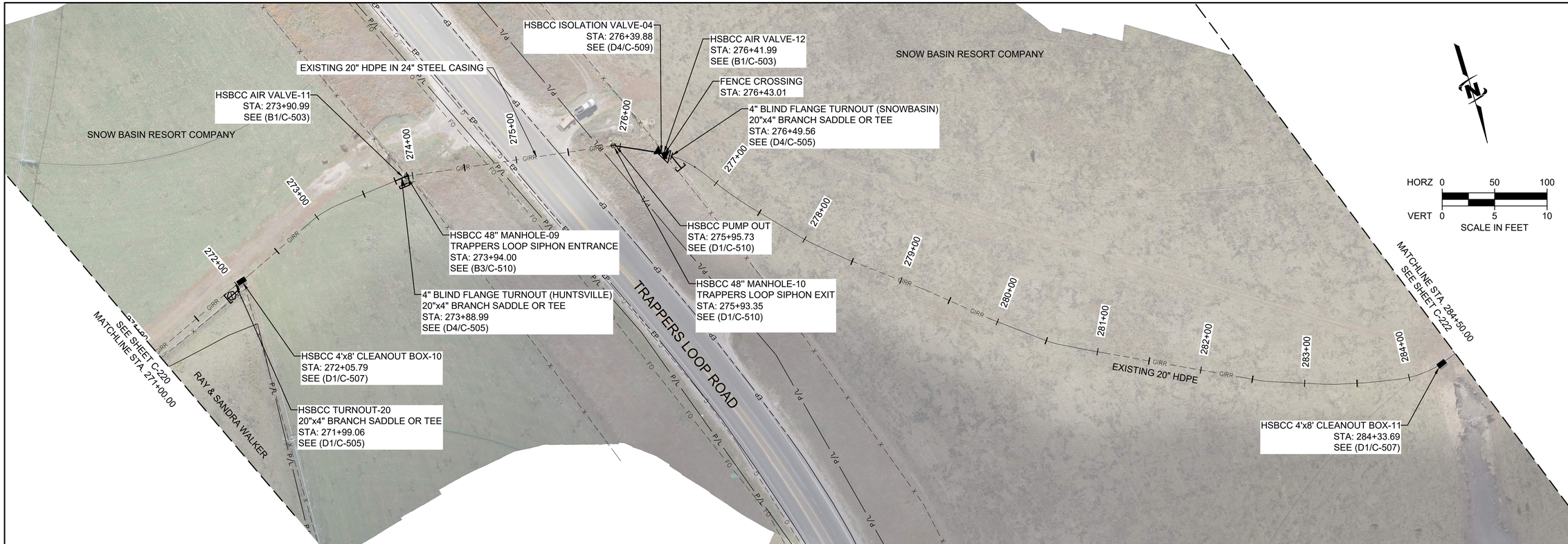

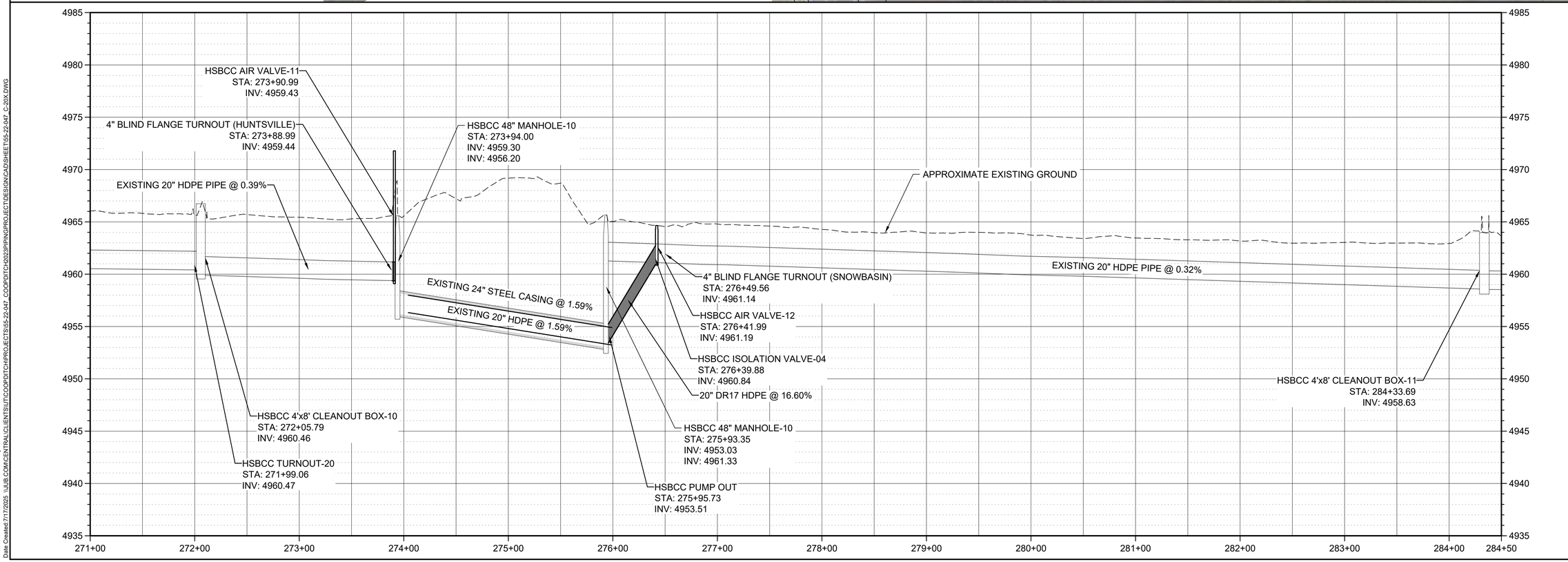

J-U-B ENGINEERS, INC.

J-U-B ENGINEERS, INC.
466 North 900 West
Kaysville, UT 84037
Phone: 801.547.0393
www.jub.com

BID SET

REGISTERED PROFESSIONAL ENGINEER
97-186246-2202
BRIAN DEETER
07/10/25
STATE OF UTAH

REUSE OF DRAWINGS
J-U-B SHALL RETAIN ALL OCCUPATIONAL STATUTORY, COPYRIGHT AND OTHER RESERVED RIGHTS OF THESE DRAWINGS, AND THE SAME SHALL NOT BE REUSED WITHOUT J-U-B'S PRIOR WRITTEN CONSENT. ANY REUSE WITHOUT WRITTEN CONSENT BY J-U-B WILL BE AT CLIENTS SOLE RISK AND WITHOUT LIABILITY OR LEGAL EXPOSURE TO J-U-B.

NO.	DESCRIPTION	BY	APR.	DATE
	REVISION			

CO-OP/HSBCC CANAL PRESSURIZATION PROJECT
CO-OP & HSBCC

HSBCC PRESSURIZED IRRIGATION PLAN AND PROFILE

FILE : 55-22-047_C-20X
JUB PROJ. # :55-22-047
DRAWN BY: JAS
DESIGN BY: JSF
CHECKED BY: JSF
ONE INCH
AT FULL SIZE, IF NOT ONE INCH, SCALE ACCORDINGLY
LAST UPDATED: 7/17/2025

SHEET NUMBER:
C-221

Plot Date:7/18/2025 11:11 AM Plotted By: Jon Frazier
Date Created:7/17/2025 \\JUB.COM\CENTRAL\CLIENTS\UT\COOPDITCH\PROJECTS\55-22-047_COOPDITCH2023\PIPING\PROJECT\DESIGN\CAD\SHEET\55-22-047_C-20X.DWG

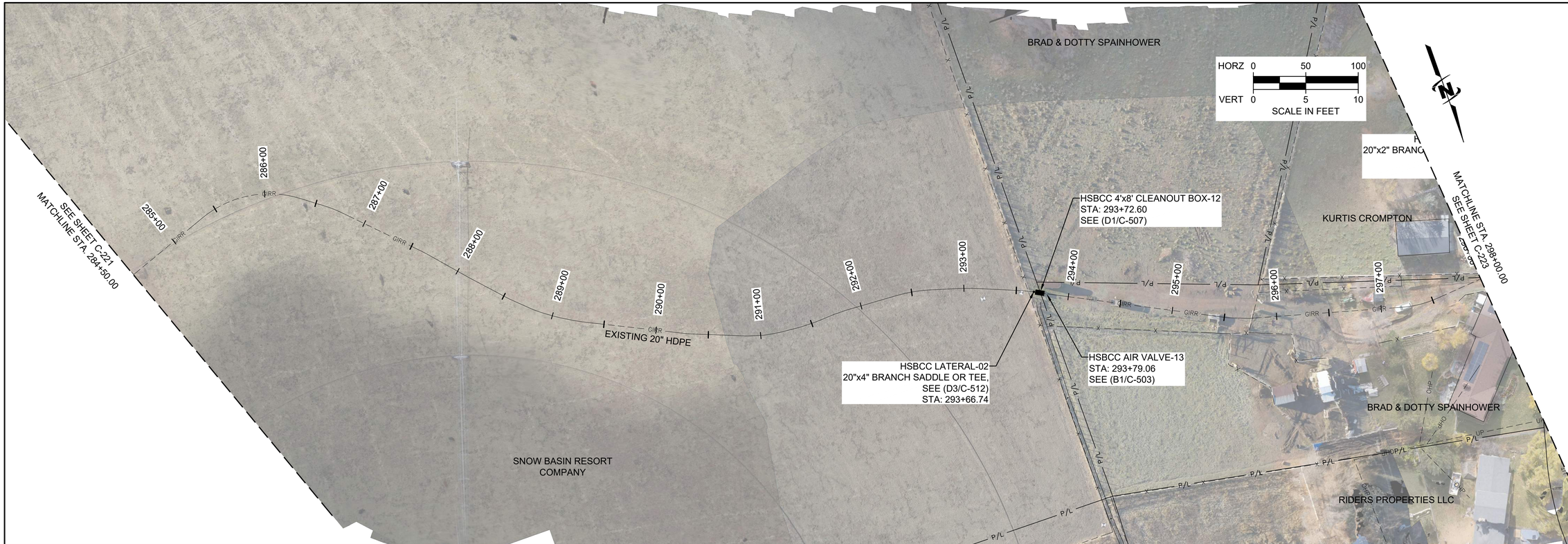

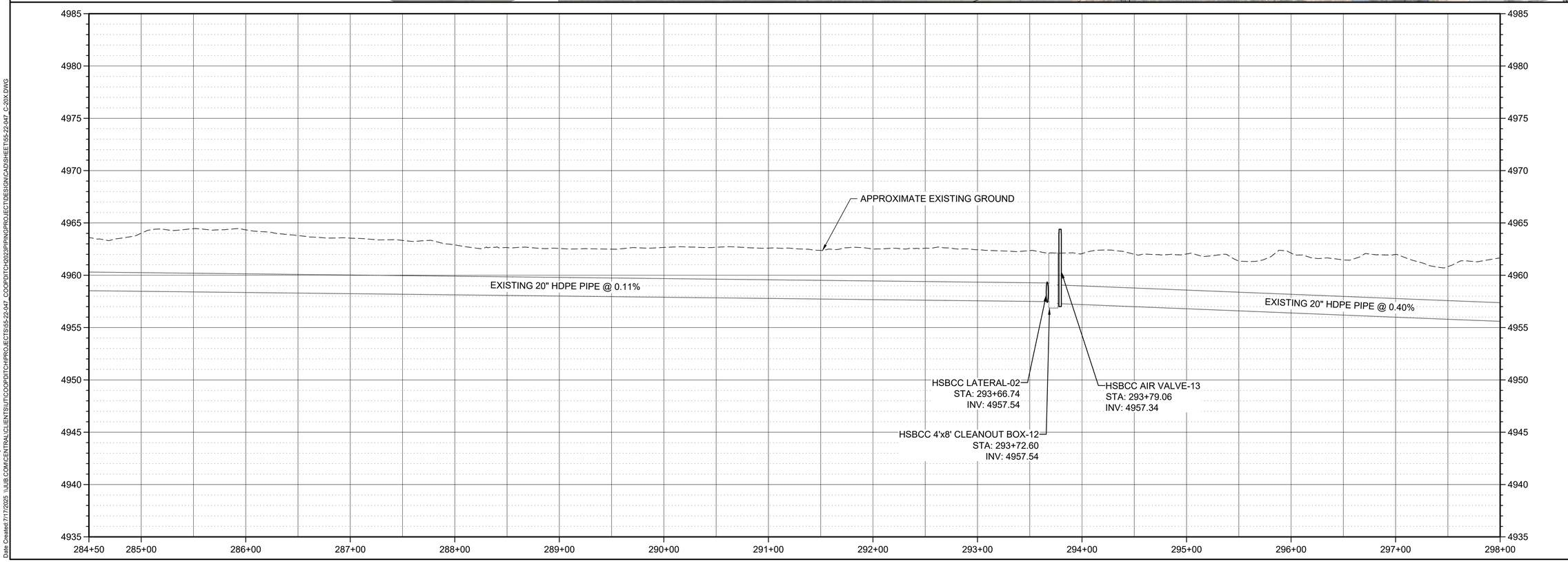

J-U-B ENGINEERS, INC.

J-U-B ENGINEERS, INC.
466 North 900 West
Kaysville, UT 84037
Phone: 801.547.0393
www.jub.com

BID SET

REGISTERED PROFESSIONAL ENGINEER
97-186246-2202
BRIAN DEETER
07/10/25
STATE OF UTAH

REUSE OF DRAWINGS
J-U-B SHALL RETAIN ALL COMMON LAW, STATUTORY, COPYRIGHT AND OTHER RESERVED RIGHTS OF THESE DRAWINGS, AND THE SAME SHALL NOT BE REUSED WITHOUT J-U-B'S PRIOR WRITTEN CONSENT. ANY REUSE WITHOUT WRITTEN CONSENT BY J-U-B WILL BE AT CLIENTS SOLE RISK AND WITHOUT LIABILITY OR LEGAL EXPOSURE TO J-U-B.

NO.	DESCRIPTION	BY	APR.	DATE
	REVISION			

CO-OP/HSBCC CANAL PRESSURIZATION PROJECT
CO-OP & HSBCC

HSBCC PRESSURIZED IRRIGATION PLAN AND PROFILE

FILE : 55-22-047_C-20X
JUB PROJ. # :55-22-047
DRAWN BY: JAS
DESIGN BY: JSF
CHECKED BY: JSF
ONE INCH
AT FULL SIZE, IF NOT ONE INCH, SCALE ACCORDINGLY
LAST UPDATED: 7/17/2025

SHEET NUMBER:
C-222

Plot Date:7/18/2025 11:14 AM Plotted By: Jon Frazier
Date Created:7/17/2025 \\JUB.COM\CENTRAL\CLIENTS\UT\COOPDITCH\PROJECTS\55-22-047_COOPDITCH2023\PIPING\PROJECT\DESIGN\CAD\SHEET\55-22-047_C-20X.DWG

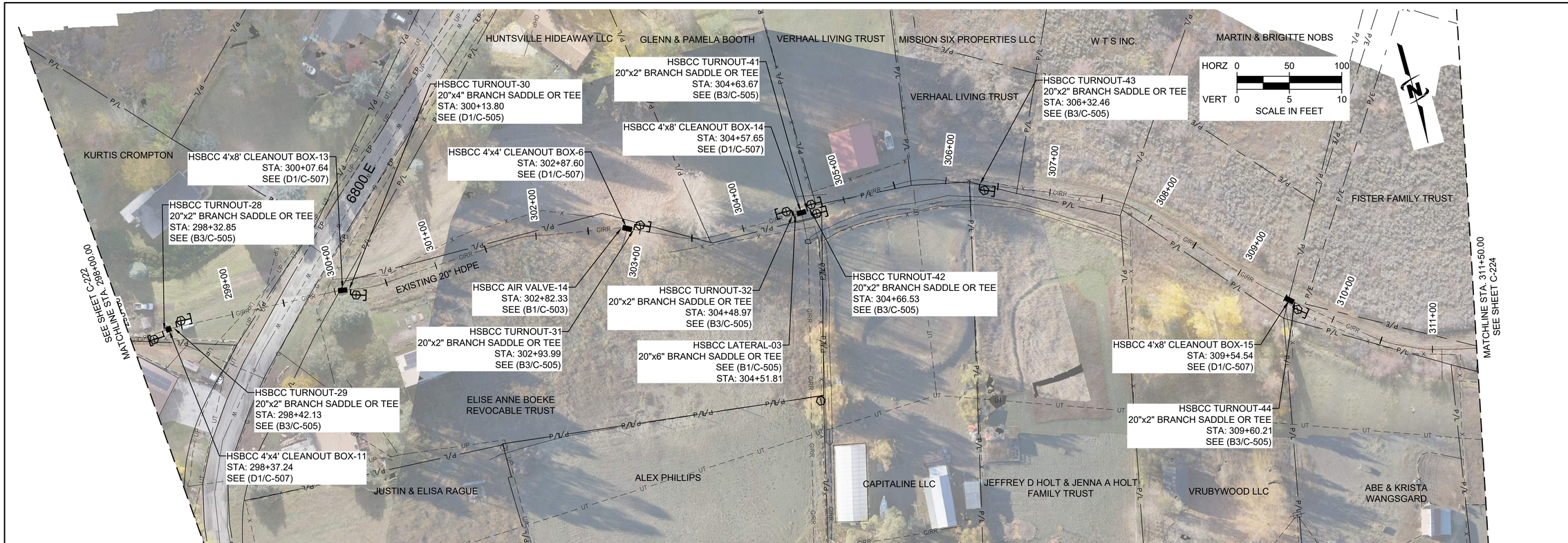

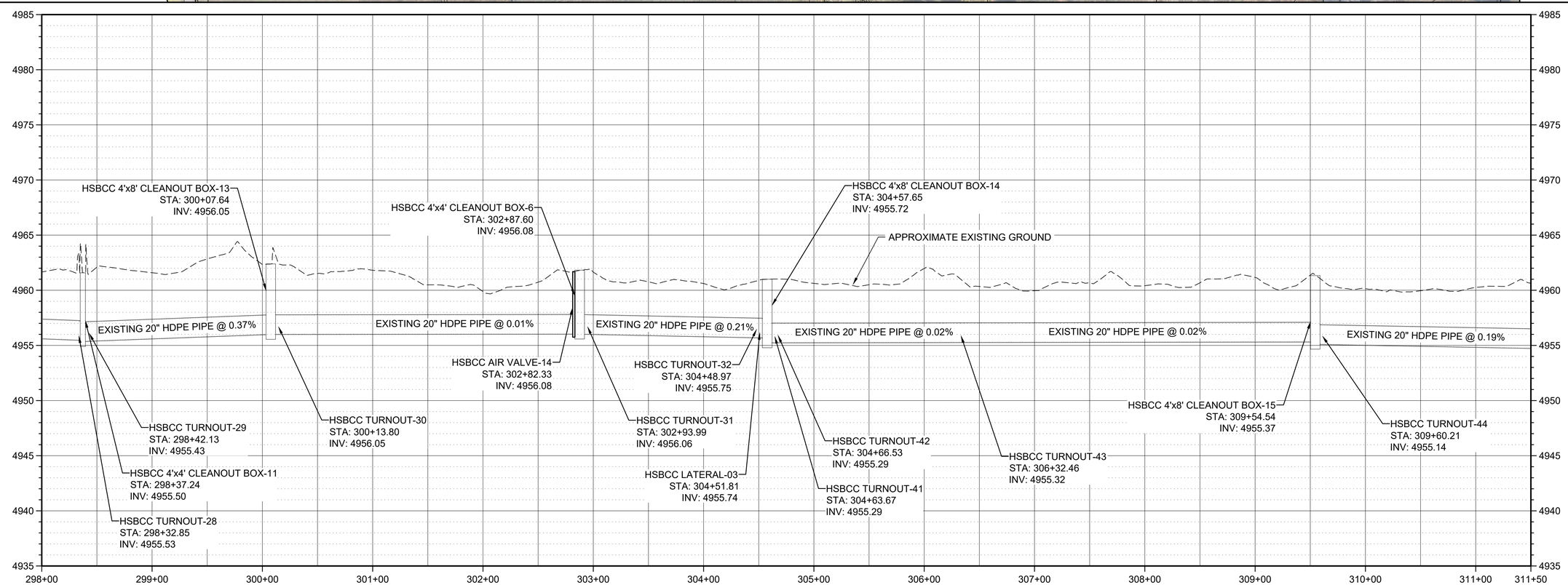

J-U-B ENGINEERS, INC.

J-U-B ENGINEERS, INC.
466 North 900 West
Kaysville, UT 84037
Phone: 801.547.0393
www.jub.com

BID SET

REGISTERED PROFESSIONAL ENGINEER
97-186246-2202
BRIAN DEETER
07/10/25
STATE OF UTAH

REUSE OF DRAWINGS
J-U-B SHALL RETAIN ALL COMMON LAW, STATUTORY, COPYRIGHT AND OTHER RESERVED RIGHTS OF THESE DRAWINGS, AND THE SAME SHALL NOT BE REUSED WITHOUT J-U-B'S PRIOR WRITTEN CONSENT. ANY REUSE WITHOUT WRITTEN CONSENT BY J-U-B WILL BE AT CLIENT'S SOLE RISK AND WITHOUT LIABILITY OR LEGAL EXPOSURE TO J-U-B.

NO.	DESCRIPTION	BY	APR.	DATE
	REVISION			

CO-OP/HSBCC CANAL PRESSURIZATION PROJECT
CO-OP & HSBCC

HSBCC PRESSURIZED IRRIGATION PLAN AND PROFILE

FILE : 55-22-047_C-20X
JUB PROJ. # :55-22-047
DRAWN BY: JAS
DESIGN BY: JSF
CHECKED BY: JSF
ONE INCH
AT FULL SIZE, IF NOT ONE INCH, SCALE ACCORDINGLY
LAST UPDATED: 7/17/2025

SHEET NUMBER:
C-223

Plot Date:7/18/2025 11:17 AM Plotted By: Jon Frazier
Date Created:7/17/2025 \\JUB.COM\CENTRAL\CLIENTS\UT\COOPDITCH\PROJECTS\55-22-047_COOPDITCH2023\PIPING\PROJECT\DESIGN\CAD\SHEET\55-22-047_C-20X.DWG

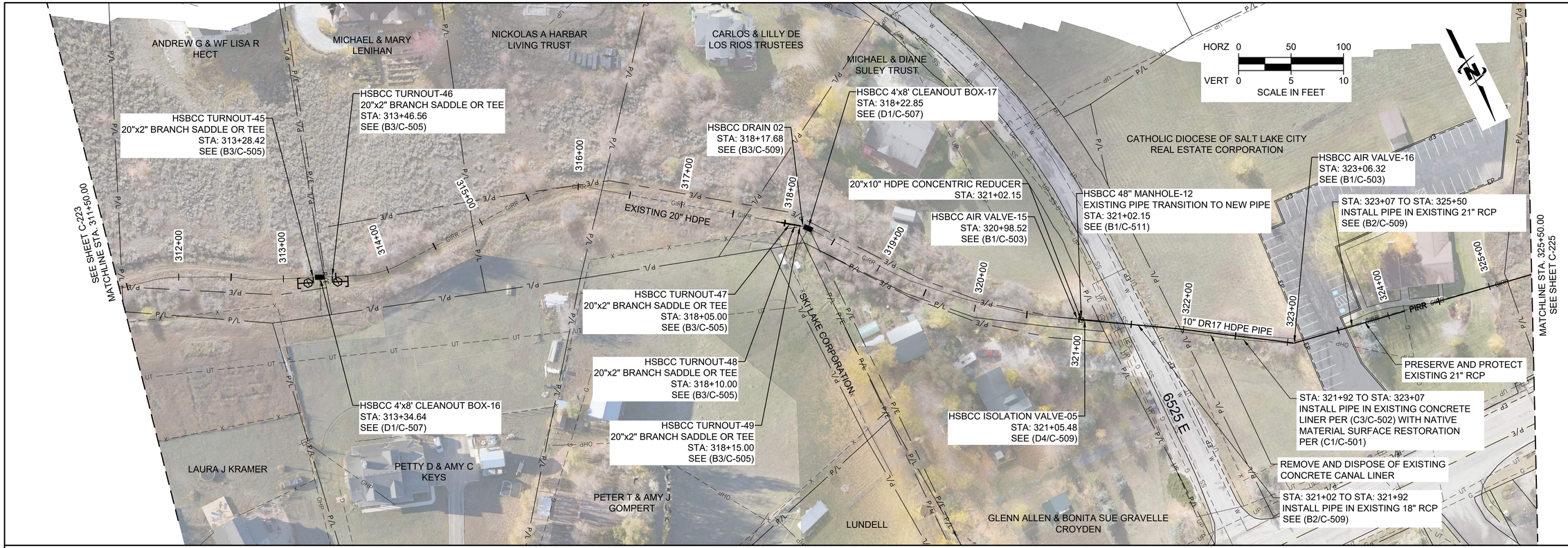

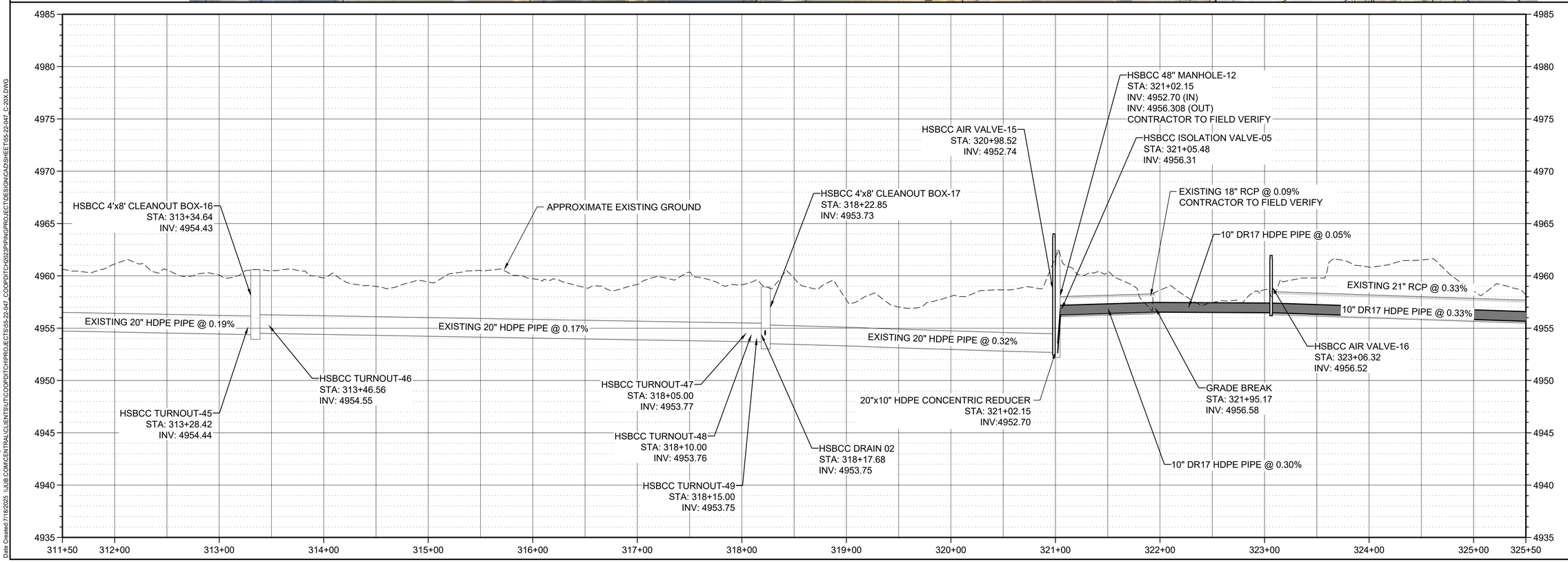

Plot Date:7/22/2025 11:55 AM Plotted By: Jon Frazier
Date Created:7/18/2025 \\JUB.COM\CENTRAL\CLIENTS\UT\COOPDITCH\PROJECTS\55-22-047_COOPDITCH2023\PIPING\PROJECT\DESIGN\CAD\SHEET\55-22-047_C-20X.DWG

J-U-B ENGINEERS, INC.

J-U-B ENGINEERS, INC.
466 North 900 West
Kaysville, UT 84037
Phone: 801.547.0393
www.jub.com

BID SET

REGISTERED PROFESSIONAL ENGINEER
97-186246-2202
BRIAN DEETER
07/10/25
STATE OF UTAH

REUSE OF DRAWINGS
J-U-B SHALL RETAIN ALL COMMON LAW, STATUTORY, COPYRIGHT AND OTHER RESERVED RIGHTS OF THESE DRAWINGS, AND THE SAME SHALL NOT BE REUSED WITHOUT J-U-B'S PRIOR WRITTEN CONSENT. ANY REUSE WITHOUT WRITTEN CONSENT BY J-U-B WILL BE AT CLIENT'S SOLE RISK AND WITHOUT LIABILITY OR LEGAL EXPOSURE TO J-U-B.

NO.	DESCRIPTION	BY	APR.	DATE
	REVISION			

CO-OP/HSBCC CANAL PRESSURIZATION PROJECT
CO-OP & HSBCC

HSBCC PRESSURIZED IRRIGATION PLAN AND PROFILE

FILE : 55-22-047_C-20X
JUB PROJ. # :55-22-047
DRAWN BY: JAS
DESIGN BY: JSF
CHECKED BY: JSF
ONE INCH
AT FULL SIZE, IF NOT ONE INCH, SCALE ACCORDINGLY
LAST UPDATED: 7/22/2025

SHEET NUMBER:
C-224

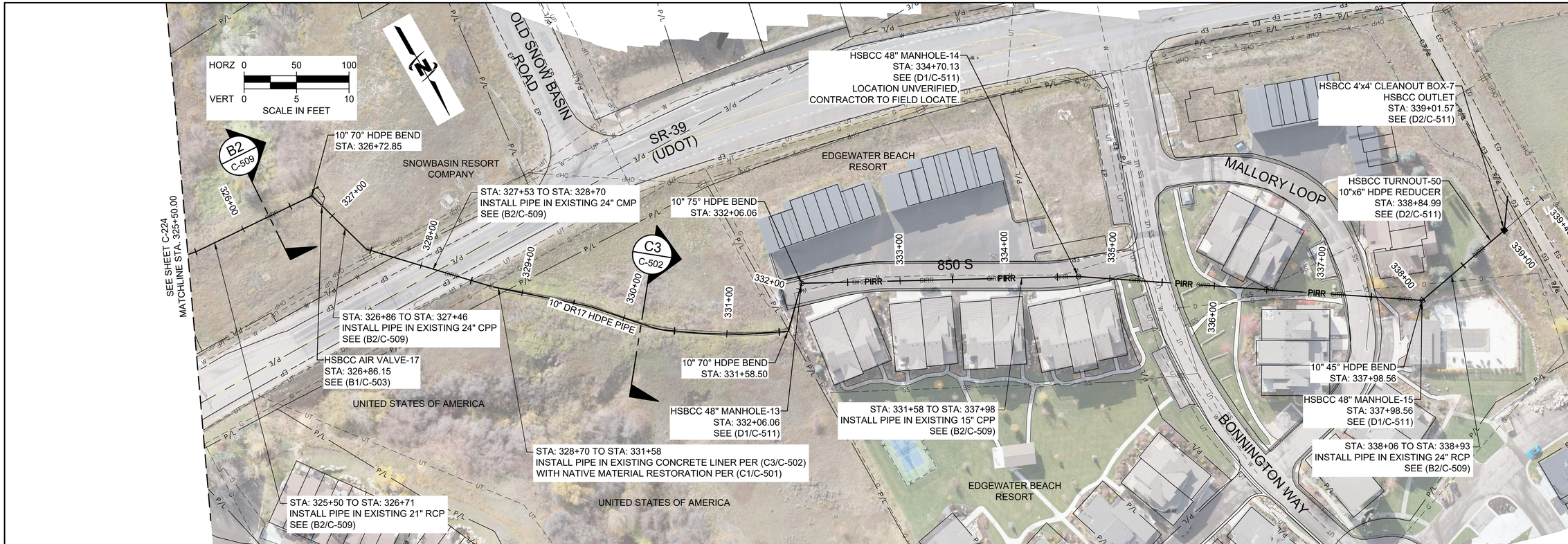

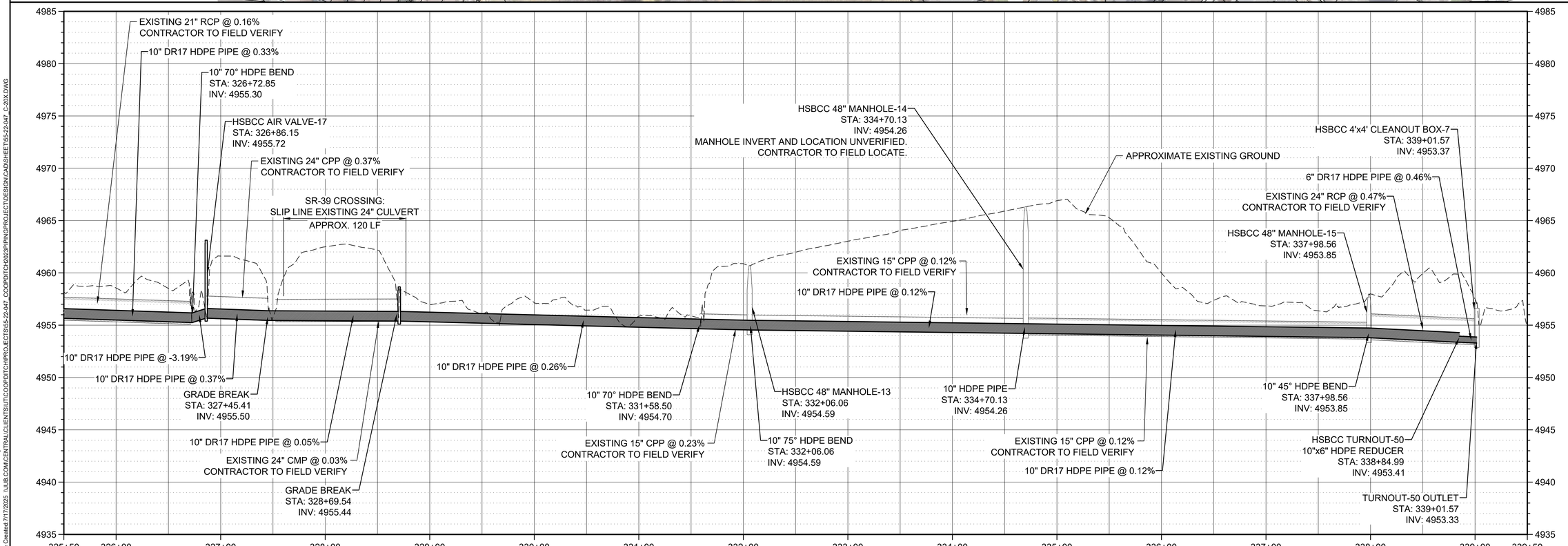

J-U-B ENGINEERS, INC.

J-U-B ENGINEERS, INC.
466 North 900 West
Kaysville, UT 84037
Phone: 801.547.0393
www.jub.com

BID SET

REGISTERED PROFESSIONAL ENGINEER 97-186246-2202 BRIAN DEETER 07/10/25 STATE OF UTAH

REUSE OF DRAWINGS
J-U-B SHALL RETAIN ALL OWNERSHIP, PROPRIETARY, COPYRIGHT AND OTHER RESERVED RIGHTS OF THESE DRAWINGS, AND THE SAME SHALL NOT BE REUSED WITHOUT J-U-B'S PRIOR WRITTEN CONSENT. ANY REUSE WITHOUT WRITTEN CONSENT BY J-U-B WILL BE AT CLIENTS SOLE RISK AND WITHOUT LIABILITY OR LEGAL EXPOSURE TO J-U-B.

NO.	DESCRIPTION	BY	APR.	DATE
	REVISION			

CO-OP/HSBCC CANAL PRESSURIZATION PROJECT CO-OP & HSBCC

HSBCC PRESSURIZED IRRIGATION PLAN AND PROFILE

FILE : 55-22-047_C-20X
JUB PROJ. # :55-22-047
DRAWN BY: JAS
DESIGN BY: JSF
CHECKED BY: JSF
ONE INCH
AT FULL SIZE, IF NOT ONE INCH, SCALE ACCORDINGLY
LAST UPDATED: 7/17/2025

SHEET NUMBER:
C-225

Plot Date:7/18/2025 11:41 AM Plotted By: Jon Frazier
Date Created:7/17/2025 \\JUB.COM\CENTRAL\CLIENTS\UT\COOPDITCH\PROJECTS\55-22-047_COOPDITCH2023\PIPING\PROJECT\DESIGN\CAD\SHEET\55-22-047_C-20X.DWG

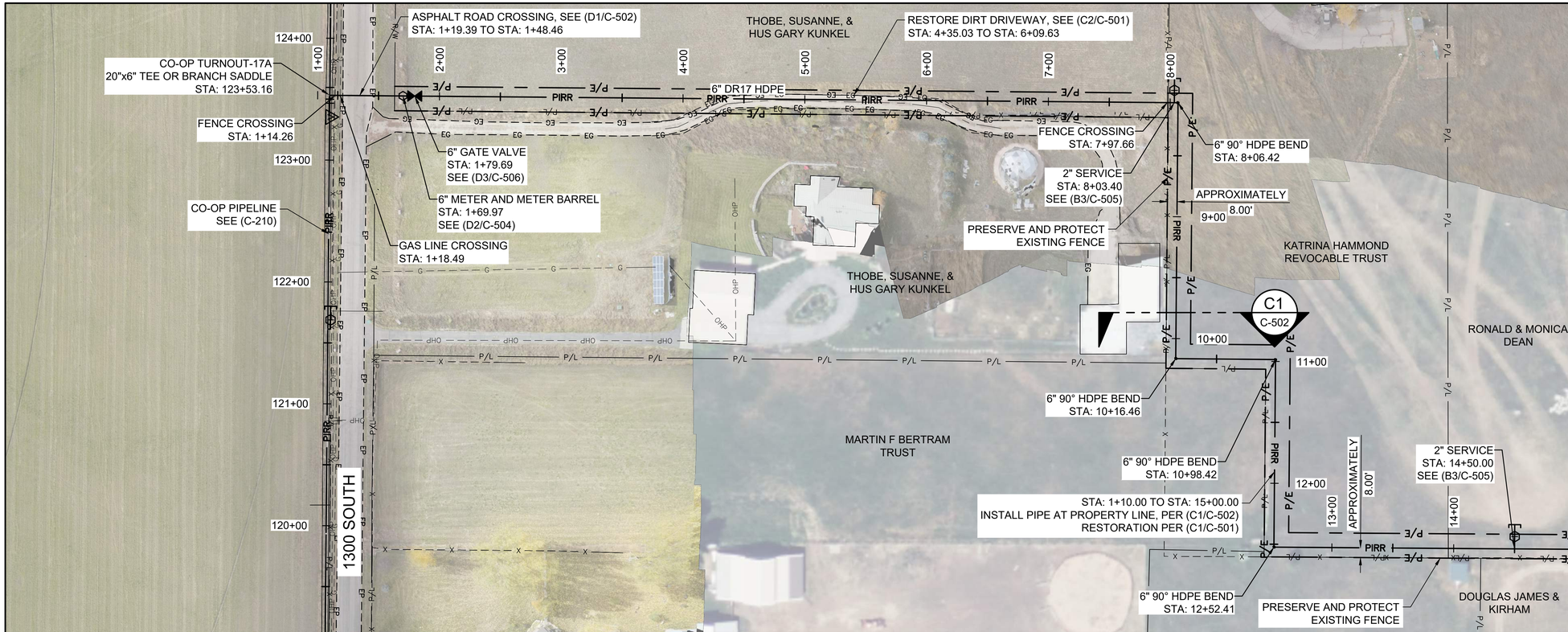

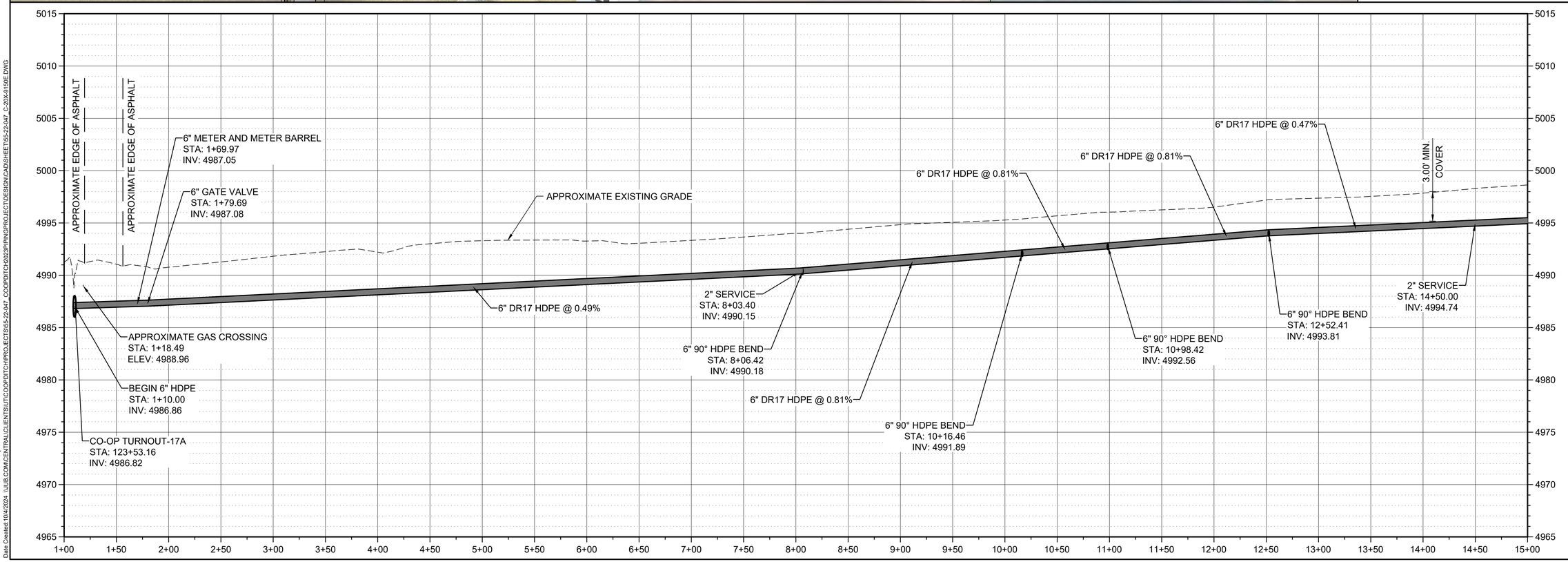

J-U-B ENGINEERS, INC.

J-U-B ENGINEERS, INC.
466 North 900 West
Kaysville, UT 84037
Phone: 801.547.0393
www.jub.com

BID SET

REGISTERED PROFESSIONAL ENGINEER
97-186246-2202
BRIAN DEETER
07/10/25
STATE OF UTAH

REUSE OF DRAWINGS
J-U-B SHALL RETAIN ALL COMMON LAW, STATUTORY, COPYRIGHT AND OTHER RESERVED RIGHTS OF THESE DRAWINGS, AND THE SAME SHALL NOT BE REUSED WITHOUT J-U-B'S PRIOR WRITTEN CONSENT. ANY REUSE WITHOUT WRITTEN CONSENT BY J-U-B WILL BE AT CLIENTS SOLE RISK AND WITHOUT LIABILITY OR LEGAL EXPOSURE TO J-U-B.

NO.	DESCRIPTION	BY	APR.	DATE
	REVISION			

CO-OP/HSBCC CANAL PRESSURIZATION PROJECT
CO-OP & HSBCC

SILVER SUMMIT ESTATES PLAN AND PROFILE

FILE : 55-22-047_C-20X-9150E
JUB PROJ. # :55-22-047
DRAWN BY: JAS
DESIGN BY: JSF
CHECKED BY: JSF
ONE INCH
AT FULL SIZE, IF NOT ONE INCH, SCALE ACCORDINGLY
LAST UPDATED: 7/15/2025

SHEET NUMBER:
C-250

Plot Date:7/18/2025 12:05 PM Plotted By: Jon Frazier
Date Created:10/4/2024 \\JUB.COM\CENTRAL\CLIENTS\UT\COOPDITCH\PROJECTS\55-22-047_COOPDITCH2023\PIPING\PROJECT\DESIGN\CAD\SHEET\55-22-047_C-20X-9150E.DWG

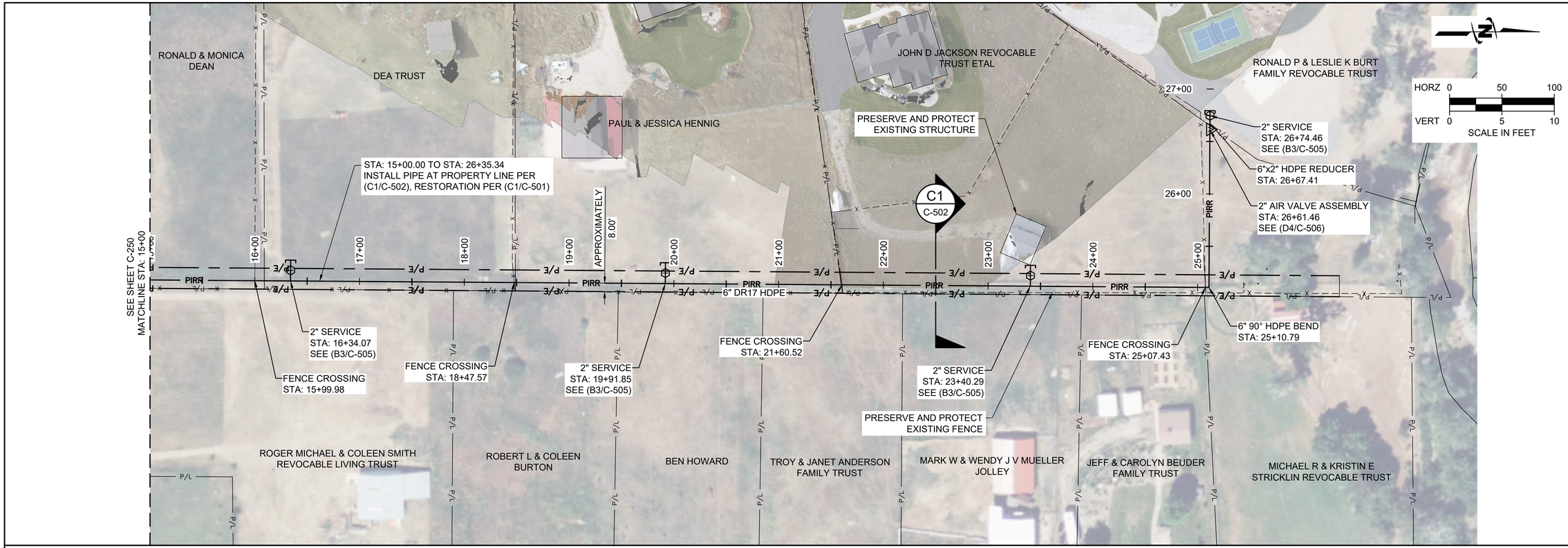

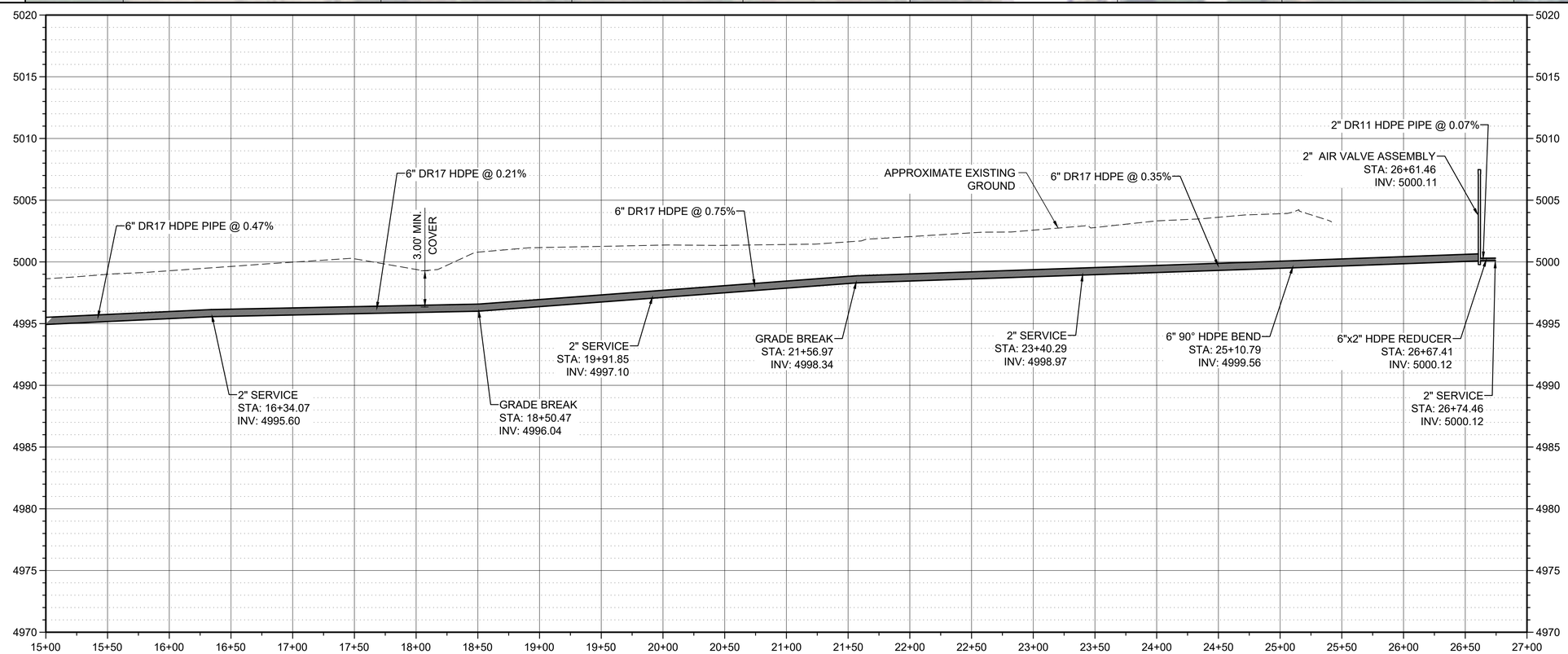

J-U-B ENGINEERS, INC.

J-U-B ENGINEERS, INC.
466 North 900 West
Kaysville, UT 84037
Phone: 801.547.0393
www.jub.com

BID SET

REGISTERED PROFESSIONAL ENGINEER
97-186246-2202
BRIAN DEETER
07/10/25
STATE OF UTAH

REUSE OF DRAWINGS
J-U-B SHALL RETAIN ALL COMMON LAW, STATUTORY, COPYRIGHT AND OTHER RESERVED RIGHTS OF THESE DRAWINGS, AND THE SAME SHALL NOT BE REUSED WITHOUT J-U-B'S PRIOR WRITTEN CONSENT. ANY REUSE WITHOUT WRITTEN CONSENT BY J-U-B WILL BE AT CLIENTS SOLE RISK AND WITHOUT LIABILITY OR LEGAL EXPOSURE TO J-U-B.

NO.	DESCRIPTION	BY	APR.	DATE
	REVISION			

CO-OP/HSBCC CANAL PRESSURIZATION PROJECT
CO-OP & HSBCC

SILVER SUMMIT ESTATES PLAN AND PROFILE

FILE : 55-22-047_C-20X-9150E
JUB PROJ. # : 55-22-047
DRAWN BY: JAS
DESIGN BY: JSF
CHECKED BY: JSF
ONE INCH
AT FULL SIZE, IF NOT ONE INCH, SCALE ACCORDINGLY
LAST UPDATED: 7/15/2025

SHEET NUMBER:
C-251

Plot Date:7/18/2025 12:08 PM Plotted By: Jon Frazier
Date Created:10/4/2024 \\JUB.COM\CENTRAL\CLIENTS\UT\COOPDITCH\PROJECTS\55-22-047_COOPDITCH2023\PIPING\PROJECT\DESIGN\CAD\SHEET\55-22-047_C-20X-9150E.DWG

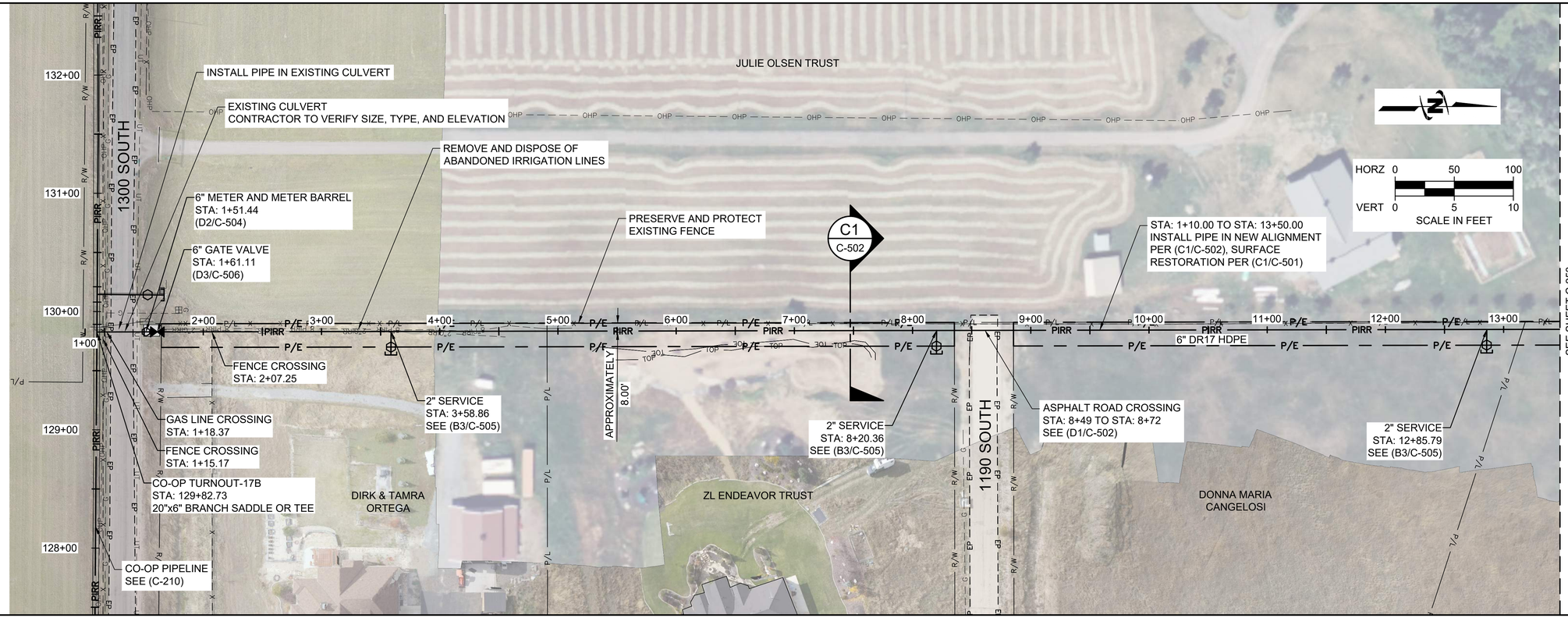

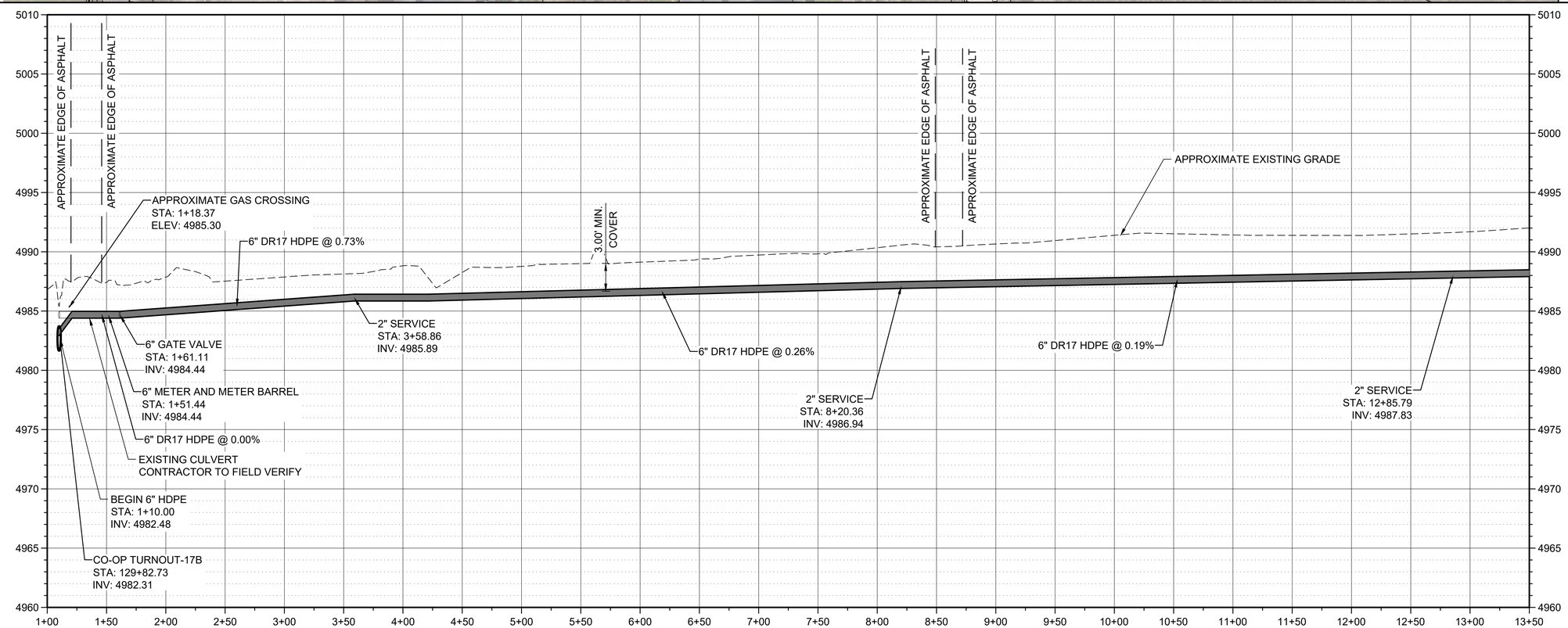

J-U-B ENGINEERS, INC.

J-U-B ENGINEERS, INC.
466 North 900 West
Kaysville, UT 84037
Phone: 801.547.0393
www.jub.com

BID SET

REGISTERED PROFESSIONAL ENGINEER
97-186246-2202
BRIAN DEETER
07/10/25
STATE OF UTAH

REUSE OF DRAWINGS
J-U-B SHALL RETAIN ALL COMMON LAW, STATUTORY, COPYRIGHT AND OTHER RESERVED RIGHTS OF THESE DRAWINGS, AND THE SAME SHALL NOT BE REUSED WITHOUT J-U-B'S PRIOR WRITTEN CONSENT. ANY REUSE WITHOUT WRITTEN CONSENT BY J-U-B WILL BE AT CLIENTS SOLE RISK AND WITHOUT LIABILITY OR LEGAL EXPOSURE TO J-U-B.

NO.	DESCRIPTION	BY	APR.	DATE
	REVISION			

CO-OP/HSBCC CANAL PRESSURIZATION PROJECT
CO-OP & HSBCC

SILVER SUMMIT ESTATES PLAN AND PROFILE

FILE : 55-22-047_C-20X-9150E
JUB PROJ. # : 55-22-047
DRAWN BY: JAS
DESIGN BY: JSF
CHECKED BY: JSF
ONE INCH
AT FULL SIZE, IF NOT ONE INCH, SCALE ACCORDINGLY
LAST UPDATED: 7/15/2025

SHEET NUMBER:
C-252

Plot Date:7/18/2025 12:11 PM Plotted By: Jon Frazier
Date Created:10/4/2024 \\JUB.COM\CENTRAL\CLIENTS\UT\COOPDITCH\PROJECTS\55-22-047_COOPDITCH2023\PIPING\PROJECT\DESIGN\CAD\SHEET\55-22-047_C-20X-9150E.DWG

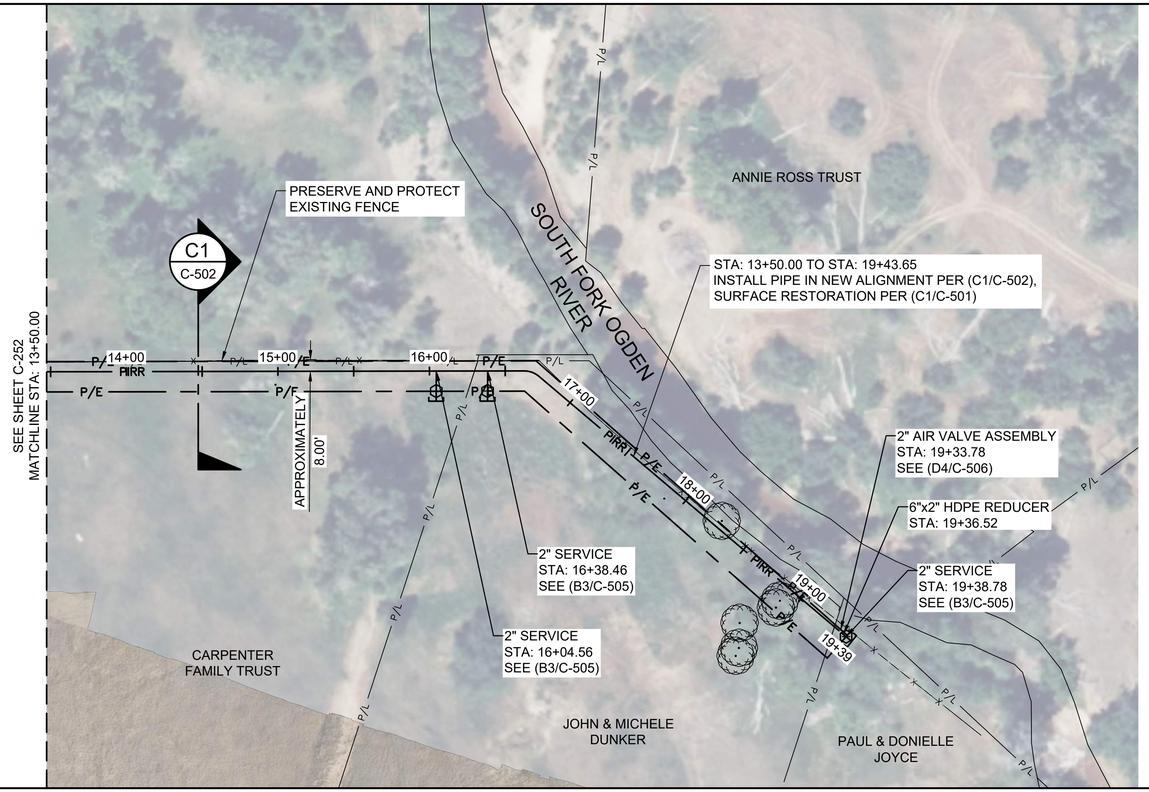

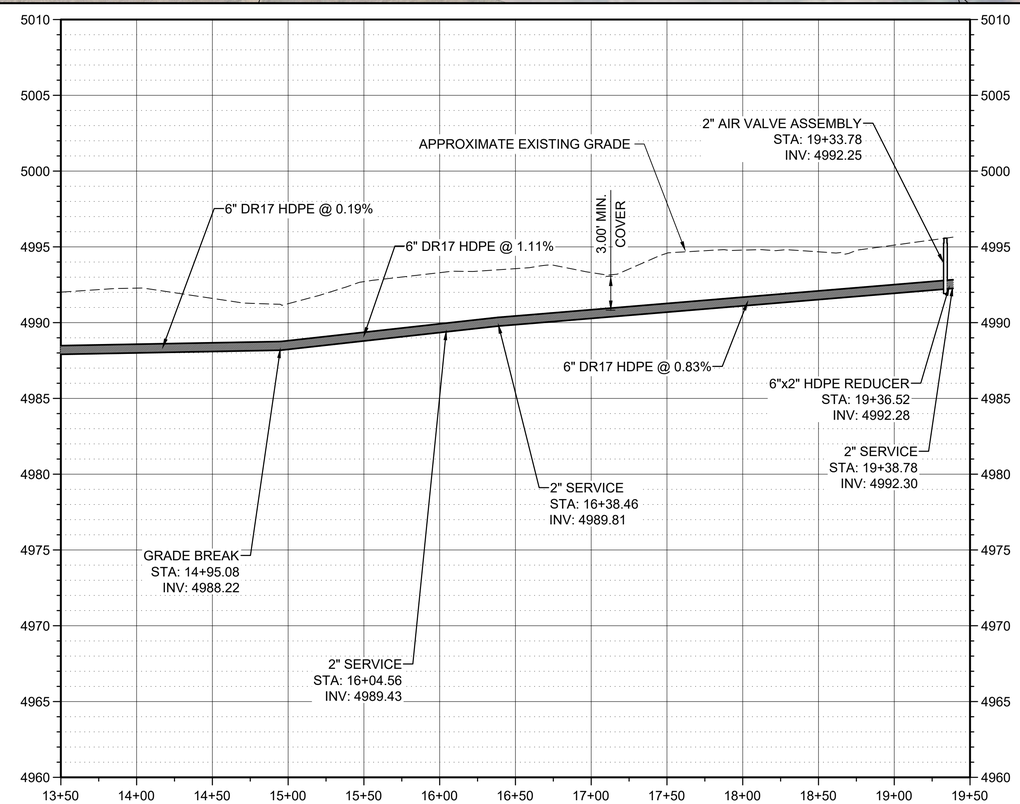

HORZ 0 50 100
VERT 0 5 10
SCALE IN FEET

J-U-B ENGINEERS, INC.

J-U-B ENGINEERS, INC.
466 North 900 West
Kaysville, UT 84037
Phone: 801.547.0393
www.jub.com

BID SET

REGISTERED PROFESSIONAL ENGINEER
97-186246-2202
BRIAN DEETER
07/10/25
STATE OF UTAH

REUSE OF DRAWINGS
J-U-B SHALL RETAIN ALL COMMON LAW, STATUTORY, COPYRIGHT AND OTHER RESERVED RIGHTS OF THESE DRAWINGS, AND THE SAME SHALL NOT BE REUSED WITHOUT J-U-B'S PRIOR WRITTEN CONSENT. ANY REUSE WITHOUT WRITTEN CONSENT BY J-U-B WILL BE AT CLIENTS SOLE RISK AND WITHOUT LIABILITY OR LEGAL EXPOSURE TO J-U-B.

NO.	REVISION	DESCRIPTION	BY	APR.	DATE

CO-OP/HSBCC CANAL PRESSURIZATION PROJECT
CO-OP & HSBCC

SILVER SUMMIT ESTATES PLAN AND PROFILE

FILE : 55-22-047_C-20X-9150E
JUB PROJ. # :55-22-047
DRAWN BY: JAS
DESIGN BY: JSF
CHECKED BY: JSF
ONE INCH
AT FULL SIZE, IF NOT ONE INCH, SCALE ACCORDINGLY
LAST UPDATED: 7/15/2025

SHEET NUMBER:
C-253

Plot Date:7/18/2025 12:38 PM Plotted By: Jon Frazier
Date Created:10/4/2024 \\JUB.COM\CENTRAL\CLIENTS\UT\COOPDITCH\PROJECTS\55-22-047_COOPDITCH2023\PIPING\PROJECT\DESIGN\CAD\SHEET\55-22-047_C-20X-9150E.DWG

ROAD CROSSING TABLE

PIPE	SIZE	STATION	ROAD	AGENCY	SHEET
CO-OP PIPELINE	20"	73+80	9500 EAST	WEBER COUNTY	C-411
CO-OP PIPELINE	20"	101+39	1200 SOUTH	WEBER COUNTY	C-412
SILVER SUMMIT ESTATES	6"	123+53	1300 SOUTH	WEBER COUNTY	C-250
SILVER SUMMIT ESTATES	6"	129+83	1300 SOUTH	WEBER COUNTY	C-252
CO-OP TURNOUT-18	6"	130+15	1300 SOUTH	WEBER COUNTY	C-409
HSBCC PIPELINE	20"	143+44	8900 EAST	WEBER COUNTY	C-413
HBCC PIPELINE	20"	275+02	TRAPPERS LOOP (SR-167)	UDOT	C-221
HSBCC PIPELINE	10"	321+56	6525 EAST	WEBER COUNTY	C-224
HSBCC PIPELINE	10"	328+31	900 SOUTH (SR-39)	UDOT	C-225

NOTES:
1. ANY WORK DONE WITHIN A PUBLIC RIGHT-OF-WAY SHALL BE COORDINATED WITH THE APPROPRIATE TRANSPORTATION AGENCY AND SHALL MEET THE REQUIREMENTS OF THAT AGENCY AND, IN PARTICULAR, REQUIREMENTS OF ANY RIGHT-OF-WAY SPECIAL USE PERMIT, OR OTHER PERMIT. ALL WORK SHALL MEET CURRENT OSHA REQUIREMENTS.
2. CONTRACTOR IS RESPONSIBLE TO SECURE ALL PERMITS FROM THE APPROPRIATE TRANSPORTATION AGENCY FOR ANY WORK PERFORMED IN THE AGENCY'S RIGHT-OF-WAY.

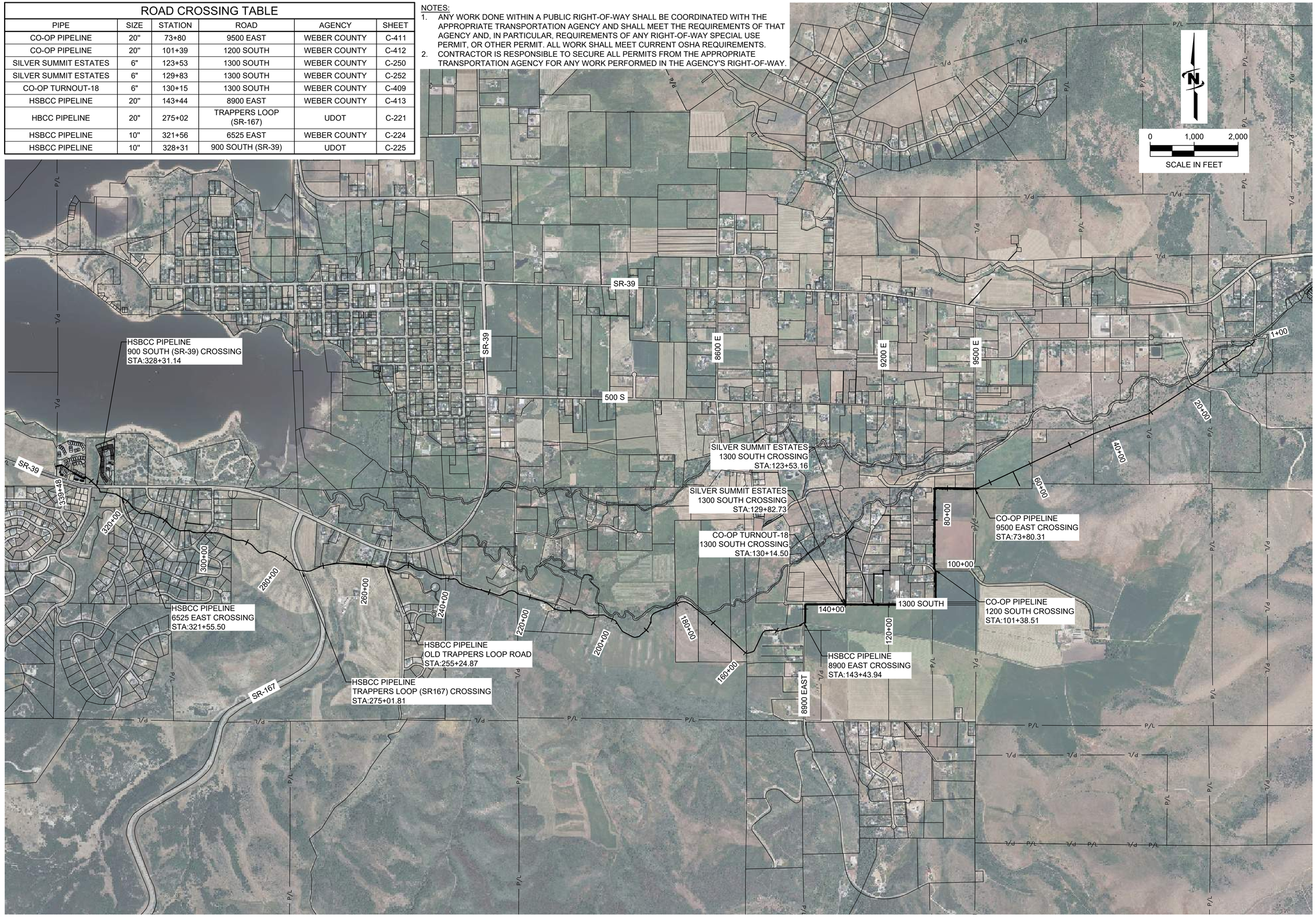

J-U-B ENGINEERS, INC.

J-U-B ENGINEERS, INC.
466 North 900 West
Kaysville, UT 84037
Phone: 801.547.0393
www.jub.com

BID SET

REGISTERED PROFESSIONAL ENGINEER
97-186246-2202
BRIAN DEETER
07/10/25
STATE OF UTAH

REUSE OF DRAWINGS
J-U-B SHALL RETAIN ALL COMMON LAW, STATUTORY, COPYRIGHT AND OTHER RESERVED RIGHTS OF THESE DRAWINGS, AND THE SAME SHALL NOT BE REUSED WITHOUT J-U-B'S PRIOR WRITTEN CONSENT. ANY REUSE WITHOUT WRITTEN CONSENT BY J-U-B WILL BE AT CLIENTS SOLE RISK AND WITHOUT LIABILITY OR LEGAL EXPOSURE TO J-U-B.

NO.	DESCRIPTION	BY	APR.	DATE
	REVISION			

CO-OP/HSBCC CANAL PRESSURIZATION PROJECT
CO-OP & HSBCC

ROAD CROSSING SUMMARY

FILE : 55-22-047 C-400
JUB PROJ. # :55-22-047
DRAWN BY: JAS
DESIGN BY: JSF
CHECKED BY: JSF
ONE INCH
AT FULL SIZE, IF NOT ONE INCH, SCALE ACCORDINGLY
LAST UPDATED: 7/15/2025

SHEET NUMBER:
C-400

Plot Date:7/17/2025 11:29 AM Plotted By: Jon Frazier
Date Created:7/15/2025 \\JUB.COM\CENTRAL\CLIENTS\UT\COOPDITCH\PROJECTS\55-22-047_COOPDITCH2023\PIPING\PROJECT\DESIGN\CAD\SHEET\55-22-047_C-400.DWG

CO-OP TURNOUT-01	
NAME	TIDWELL, BOOTH, WESCHE
SHARES	0
SHARE FLOW	0 GPM
DESIGN FLOW	150 GPM
STATIC PRESSURE	0 PSI
WORKING PRESSURE	0 PSI

NOTES:
1. DESIGN FLOW = 3 USERS AT 50 GPM EACH

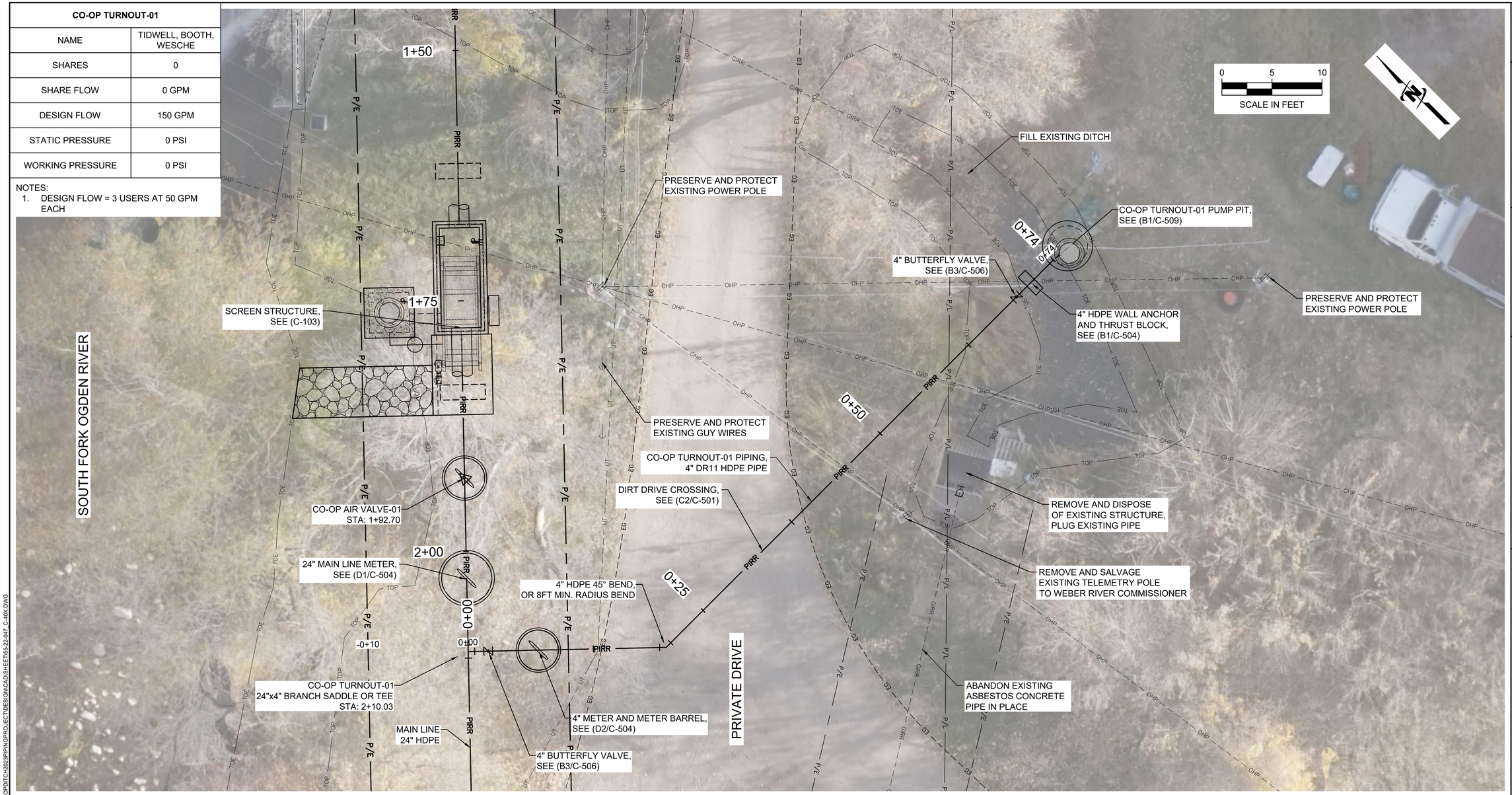

NOTES:
1. CONTRACTOR TO PROVIDE BENDS AS REQUIRED TO ACHIEVE PIPE SLOPES.
2. CONTRACTOR TO VERIFY PUMP PIT LOCATION WITH PROPERTY OWNER.

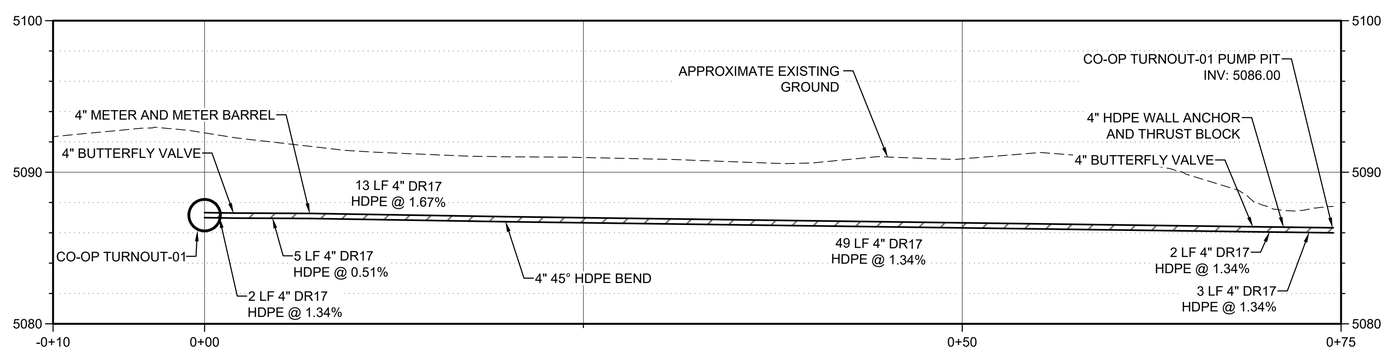

J-U-B ENGINEERS, INC.
466 North 900 West
Kaysville, UT 84037
Phone: 801.547.0393
www.jub.com

BID SET

REGISTERED PROFESSIONAL ENGINEER
97-186246-2202
BRIAN DEETER
07/10/25
STATE OF UTAH

REUSE OF DRAWINGS
J-U-B SHALL RETAIN ALL COMMON LAW, STATUTORY, COPYRIGHT AND OTHER RESERVED RIGHTS OF THESE DRAWINGS, AND THE SAME SHALL NOT BE REUSED WITHOUT J-U-B'S PRIOR WRITTEN CONSENT. ANY REUSE WITHOUT WRITTEN CONSENT BY J-U-B WILL BE AT CLIENTS SOLE RISK AND WITHOUT LIABILITY OR LEGAL EXPOSURE TO J-U-B.

NO.	DESCRIPTION	BY	APR.	DATE
	REVISION			

CO-OP/HSBCC CANAL PRESSURIZATION PROJECT
CO-OP & HSBCC

CO-OP TURNOUT-01

FILE : 55-22-047_C-40X
JUB PROJ. # :55-22-047
DRAWN BY: JAS
DESIGN BY: JSF
CHECKED BY: JSF
ONE INCH
AT FULL SIZE, IF NOT ONE INCH, SCALE ACCORDINGLY
LAST UPDATED: 7/15/2025

SHEET NUMBER:
C-401

Plot Date:7/17/2025 11:34 AM Plotted By: Jon Frazier
Date Created:10/3/2024 \\JUB.COM\CENTRAL\CLIENTS\UT\COOPDITCH\PROJECTS\55-22-047_COOPDITCH2023PIPINGPROJECT\DESIGN\CAD\SHEETS\55-22-047_C-40X.DWG

CO-OP TURNOUT-02	
NAME	HANSON
SHARES	0
SHARE FLOW	0 GPM
DESIGN FLOW	50 GPM
STATIC PRESSURE	4.89 PSI
WORKING PRESSURE	0 PSI

NOTES:
1. CONTRACTOR TO PROVIDE BENDS AS REQUIRED TO ACHIEVE PIPE SLOPES
2. CONTRACTOR TO COORDINATE LOCATION, CONFIGURATION, AND ELEVATION OF TURNOUT WITH PROPERTY OWNER.

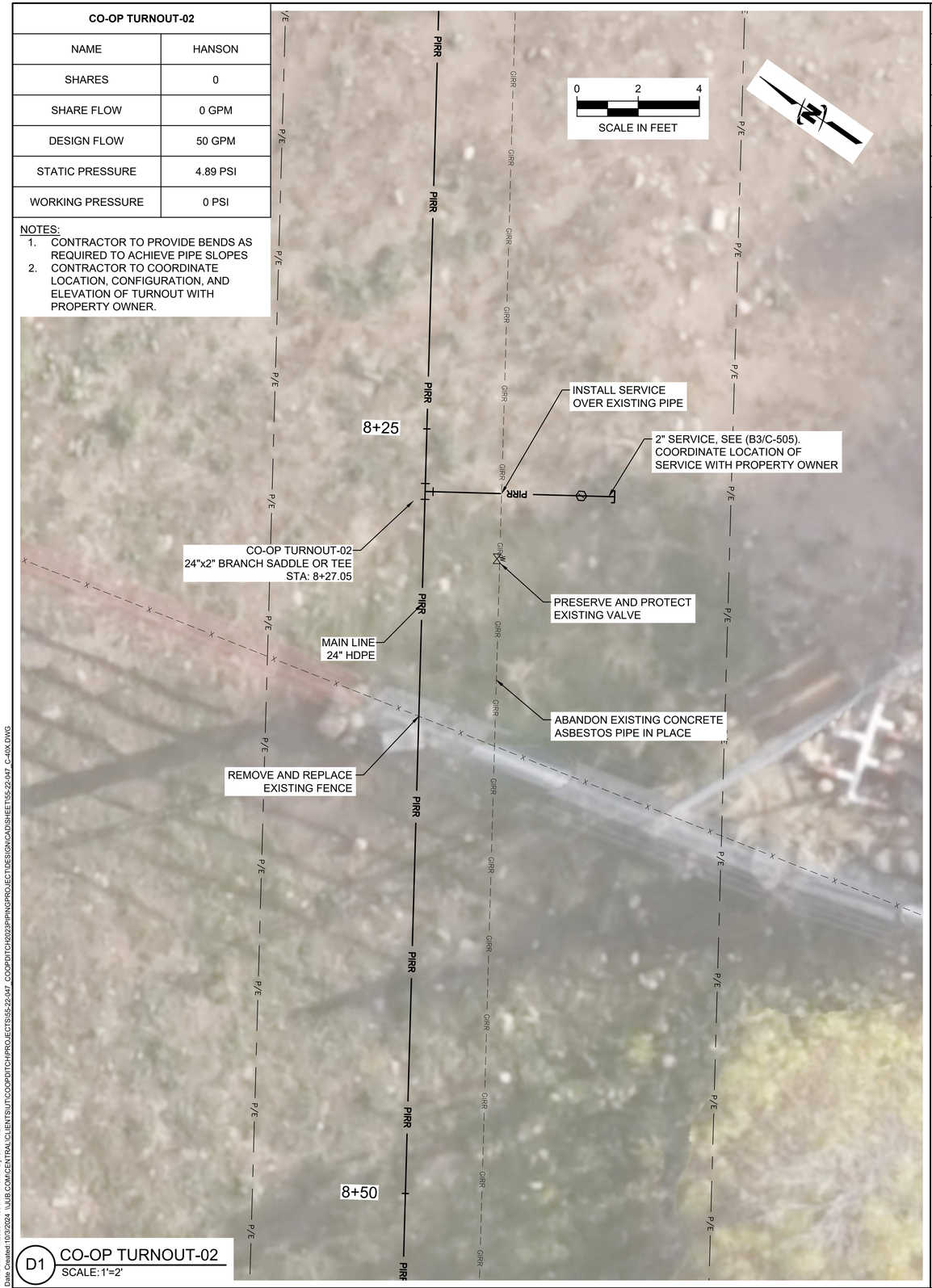

D1 CO-OP TURNOUT-02
SCALE: 1'=2'

CO-OP TURNOUT-03	
NAME	OLSEN
SHARES	0
SHARE FLOW	0 GPM
DESIGN FLOW	50 GPM
STATIC PRESSURE	5.51 PSI
WORKING PRESSURE	0 PSI

NOTES:
1. CONTRACTOR TO PROVIDE BENDS AS REQUIRED TO ACHIEVE PIPE SLOPES
2. CONTRACTOR TO COORDINATE LOCATION, CONFIGURATION, AND ELEVATION OF TURNOUT WITH PROPERTY OWNER.

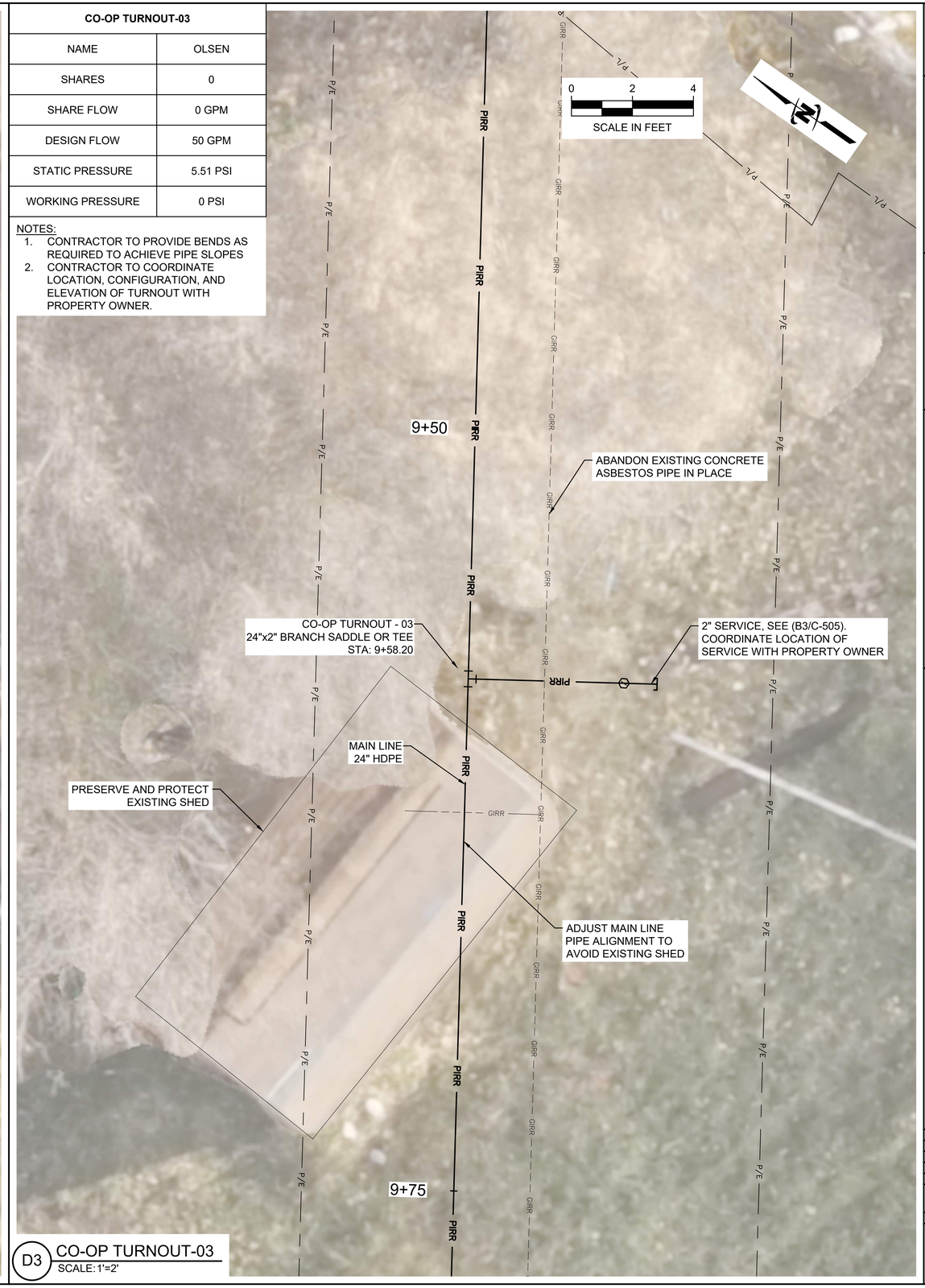

D3 CO-OP TURNOUT-03
SCALE: 1'=2'

J-U-B ENGINEERS, INC.

J-U-B ENGINEERS, INC.
466 North 900 West
Kaysville, UT 84037
Phone: 801.547.0393
www.jub.com

BID SET

REGISTERED PROFESSIONAL ENGINEER
97-186246-2202
BRIAN DEETER
07/10/25
STATE OF UTAH

REUSE OF DRAWINGS
J-U-B SHALL RETAIN ALL COMMON LAW, STATUTORY, COPYRIGHT AND OTHER RESERVED RIGHTS OF THESE DRAWINGS, AND THE SAME SHALL NOT BE REUSED WITHOUT J-U-B'S PRIOR WRITTEN CONSENT. ANY REUSE WITHOUT WRITTEN CONSENT BY J-U-B WILL BE AT CLIENTS SOLE RISK AND WITHOUT LIABILITY OR LEGAL EXPOSURE TO J-U-B.

NO.	DESCRIPTION	BY	APR.	DATE
	REVISION			

CO-OP/HSBCC CANAL PRESSURIZATION PROJECT
CO-OP & HSBCC

CO-OP TUNROUT-02 & TURNOUT-03

FILE : 55-22-047_C-40X
JUB PROJ. # : 55-22-047
DRAWN BY: JAS
DESIGN BY: JSF
CHECKED BY: JSF
ONE INCH
AT FULL SIZE, IF NOT ONE INCH, SCALE ACCORDINGLY
LAST UPDATED: 7/15/2025

SHEET NUMBER:
C-402

Plot Date:7/17/2025 11:38 AM Plotted By: Jon Frazier
Date Created:10/3/2024 \\JUB.COM\CENTRAL\CLIENTS\UT\COOPDITCH\PROJECTS\55-22-047_COOPDITCH2023\PIPINGPROJECT\DESIGN\CAD\SHEET\55-22-047_C-40X.DWG

CO-OP TURNOUT-04A	
NAME	RICH
SHARES	40
SHARE FLOW	123 GPM
DESIGN FLOW	195 GPM
STATIC PRESSURE	14.14 PSI
WORKING PRESSURE	12.16 PSI

NOTES:
1. DESIGN FLOW IS CAPACITY OF 4" PIPE AT V= 5 FPS
2. CONTRACTOR TO PROVIDE BENDS AS REQUIRED TO ACHIEVE PIPE SLOPES
3. CONTRACTOR TO COORDINATE LOCATION, CONFIGURATION, AND ELEVATION OF TURNOUT WITH PROPERTY OWNER.

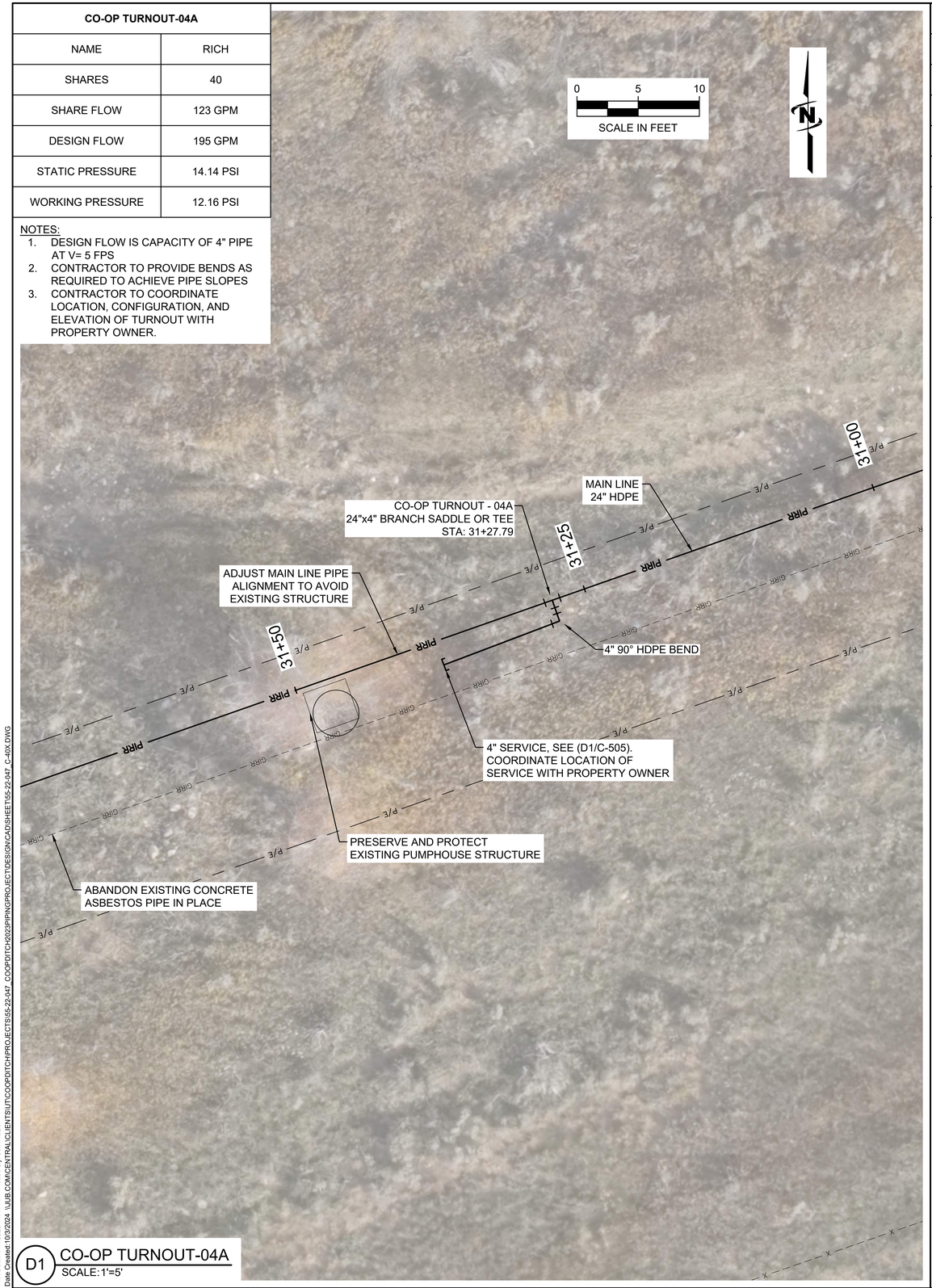

D1 CO-OP TURNOUT-04A
SCALE: 1'=5'

CO-OP TURNOUT-04B	
NAME	RICH
SHARES	40
SHARE FLOW	123 GPM
DESIGN FLOW	195 GPM
STATIC PRESSURE	19.69 PSI
WORKING PRESSURE	12.16 PSI

NOTES:
1. DESIGN FLOW IS CAPACITY OF 4" PIPE AT V= 5 FPS
2. CONTRACTOR TO PROVIDE BENDS AS REQUIRED TO ACHIEVE PIPE SLOPES
3. CONTRACTOR TO COORDINATE LOCATION, CONFIGURATION, AND ELEVATION OF TURNOUT WITH PROPERTY OWNER.

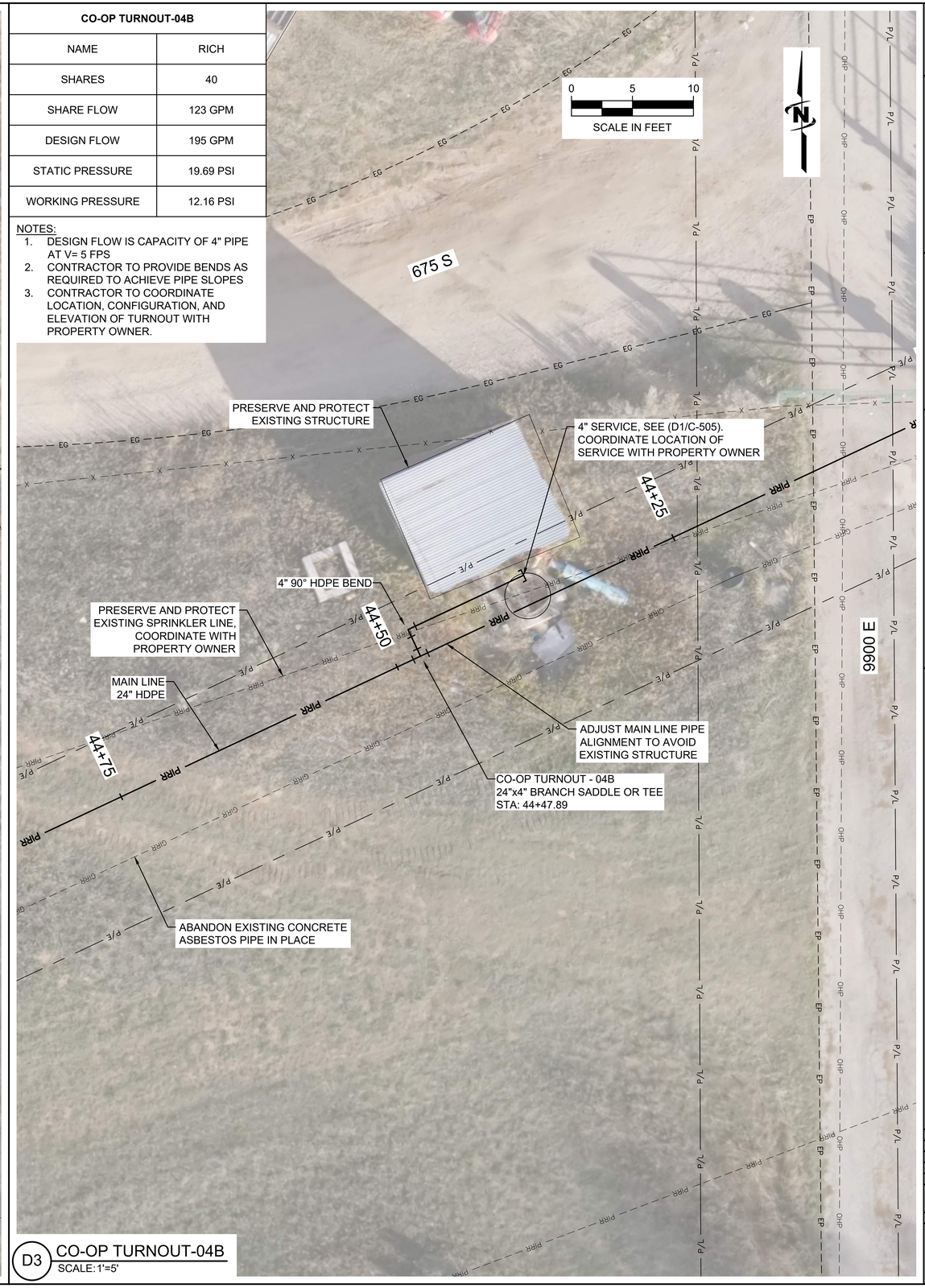

D3 CO-OP TURNOUT-04B
SCALE: 1'=5'

J-U-B ENGINEERS, INC.
466 North 900 West
Kaysville, UT 84037
Phone: 801.547.0393
www.jub.com

BID SET

REGISTERED PROFESSIONAL ENGINEER
97-186246-2202
BRIAN DEETER
07/10/25
STATE OF UTAH

REUSE OF DRAWINGS
J-U-B SHALL RETAIN ALL OWNERSHIP, POSSESSORY, COPYRIGHT AND OTHER RESERVED RIGHTS OF THESE DRAWINGS, AND THE SAME SHALL NOT BE REUSED WITHOUT J-U-B'S PRIOR WRITTEN CONSENT. ANY REUSE WITHOUT WRITTEN CONSENT BY J-U-B WILL BE AT CLIENTS SOLE RISK AND WITHOUT LIABILITY OR LEGAL EXPOSURE TO J-U-B.

NO.	DESCRIPTION	BY	APR.	DATE
	REVISION			

CO-OP/HSBCC CANAL PRESSURIZATION PROJECT
CO-OP & HSBCC

CO-OP TURNOUT-04A & TURNOUT-04B

FILE : 55-22-047_C-40X
JUB PROJ. # :55-22-047
DRAWN BY: JAS
DESIGN BY: JSF
CHECKED BY: JSF
ONE INCH
AT FULL SIZE, IF NOT ONE INCH, SCALE ACCORDINGLY
LAST UPDATED: 7/15/2025

SHEET NUMBER:
C-403

Plot Date:7/17/2025 11:41 AM Plotted By: Jon Frazier
Date Created:10/3/2024 \\JUB.COM\CENTRAL\CLIENTS\UT\COOPDITCH\PROJECTS\55-22-047_COOPDITCH2023PIPING\PROJECT\DESIGN\CAD\SHEETS\55-22-047_C-40X.DWG

CO-OP TURNOUT-05	
NAME	WHITE
SHARES	660
SHARE FLOW	2,027 GPM (4.5cfs)
DESIGN FLOW	2,739 GPM (6.1 cfs)
STATIC PRESSURE	27.76 PSI
WORKING PRESSURE	19.12 PSI

NOTES:
1. DESIGN FLOW IS CAPACITY OF 16" PIPE AT V= 5 FPS
2. CONTRACTOR TO PROVIDE BENDS AS REQUIRED TO ACHIEVE PIPE SLOPES
3. CONTRACTOR TO COORDINATE LOCATION, CONFIGURATION, AND ELEVATION OF TURNOUT WITH PROPERTY OWNER.

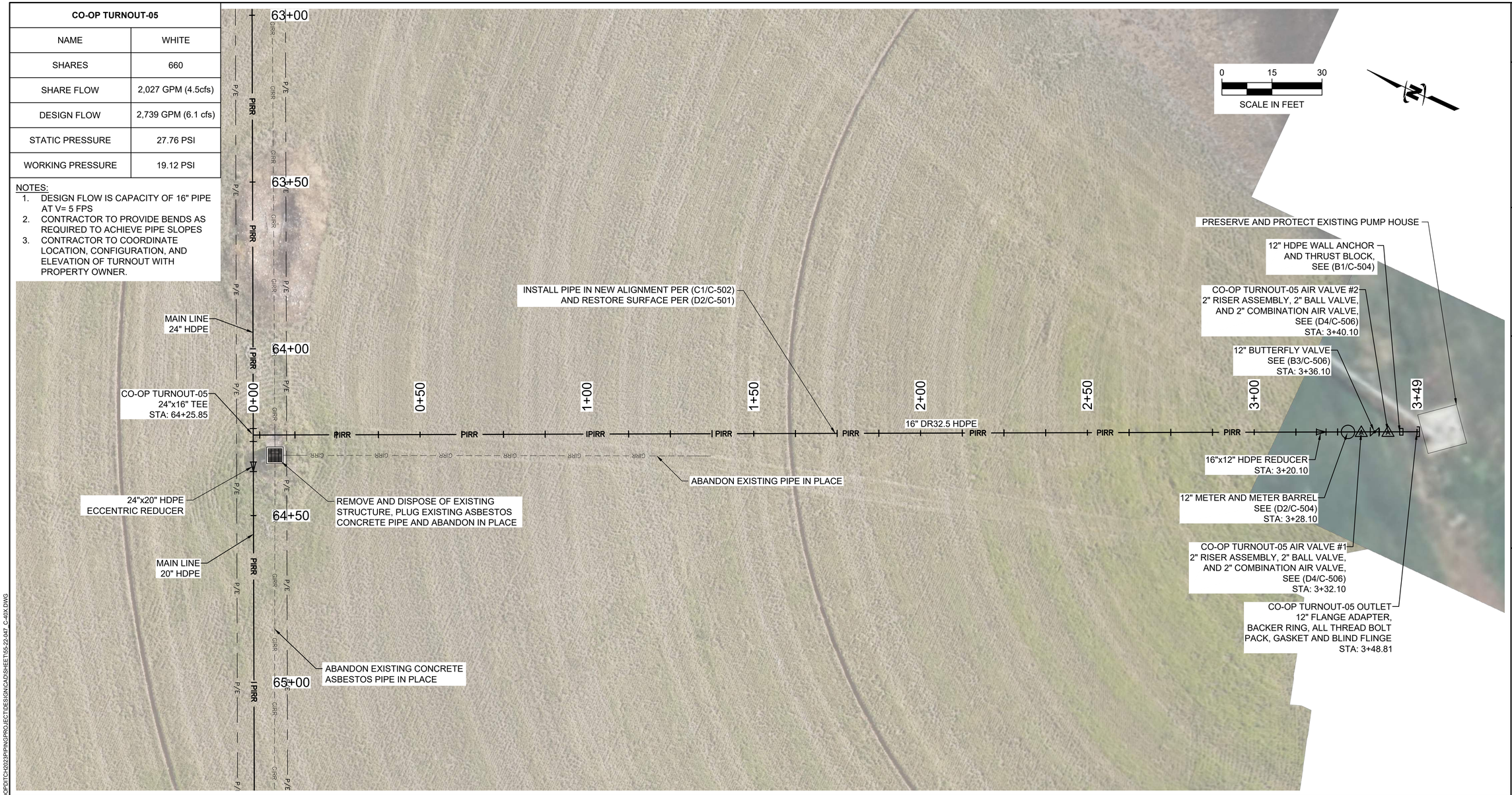

NOTES:
1. CONTRACTOR TO PROVIDE BENDS AS REQUIRED TO ACHIEVE PIPE SLOPES

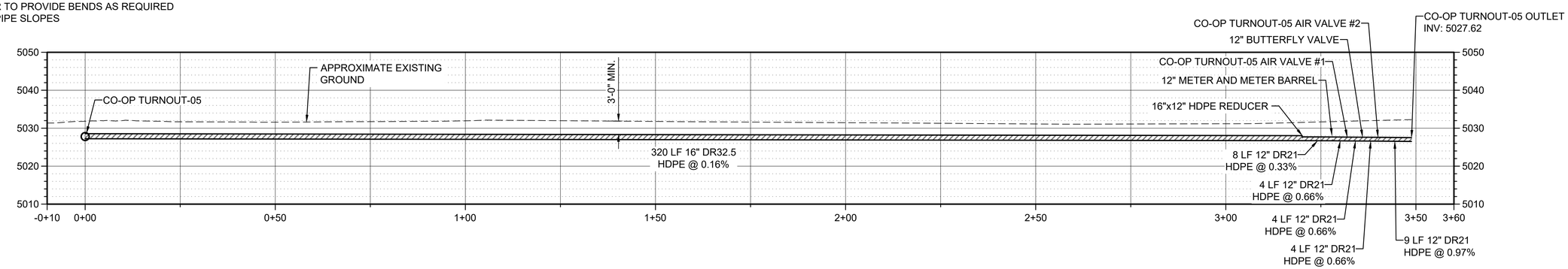

J-U-B ENGINEERS, INC.
J-U-B ENGINEERS, INC.
466 North 900 West
Kaysville, UT 84037
Phone: 801.547.0393
www.jub.com

BID SET

REGISTERED PROFESSIONAL ENGINEER 97-186246-2202 BRIAN DEETER 07/10/25 STATE OF UTAH

REUSE OF DRAWINGS
J-U-B SHALL RETAIN ALL OCCUPATIONAL PROPERTY, COPYRIGHT AND OTHER RESERVED RIGHTS OF THESE DRAWINGS, AND THE SAME SHALL NOT BE REUSED WITHOUT J-U-B'S PRIOR WRITTEN CONSENT. ANY REUSE WITHOUT WRITTEN CONSENT BY J-U-B WILL BE AT CLIENTS SOLE RISK AND WITHOUT LIABILITY OR LEGAL EXPOSURE TO J-U-B.

NO.	DESCRIPTION	BY	APR.	DATE
	REVISION			

CO-OP/HSBCC CANAL PRESSURIZATION PROJECT
CO-OP & HSBCC

CO-OP TURNOUT-05

FILE : 55-22-047_C-40X
JUB PROJ. # :55-22-047
DRAWN BY: JAS
DESIGN BY: JSF
CHECKED BY: JSF
ONE INCH
AT FULL SIZE, IF NOT ONE INCH, SCALE ACCORDINGLY
LAST UPDATED: 7/15/2025

SHEET NUMBER:
C-404

Plot Date:7/17/2025 11:43 AM Plotted By: Jon Frazier
Date Created:10/3/2024 \\JUB.COM\CENTRAL\CLIENTS\UT\COOPDITCH\PROJECTS\55-22-047_COOPDITCH2023PIPING\PROJECT\DESIGN\CAD\SHEETS\55-22-047_C-40X.DWG

CO-OP TURNOUT-06	
NAME	BUEDER, WRIGHT, STRICKLIN, AKM, LACOOK
SHARES	28
SHARE FLOW	86 GPM
DESIGN FLOW	250 GPM
STATIC PRESSURE	35.47 PSI
WORKING PRESSURE	26.33 PSI

NOTES:
1. DESIGN FLOW = 5 USERS AT 50 GPM EACH.
2. CONTRACTOR TO PROVIDE BENDS AS REQUIRED TO ACHIEVE PIPE SLOPES
3. CONTRACTOR TO COORDINATE LOCATION, CONFIGURATION, AND ELEVATION OF TURNOUT WITH PROPERTY OWNER.

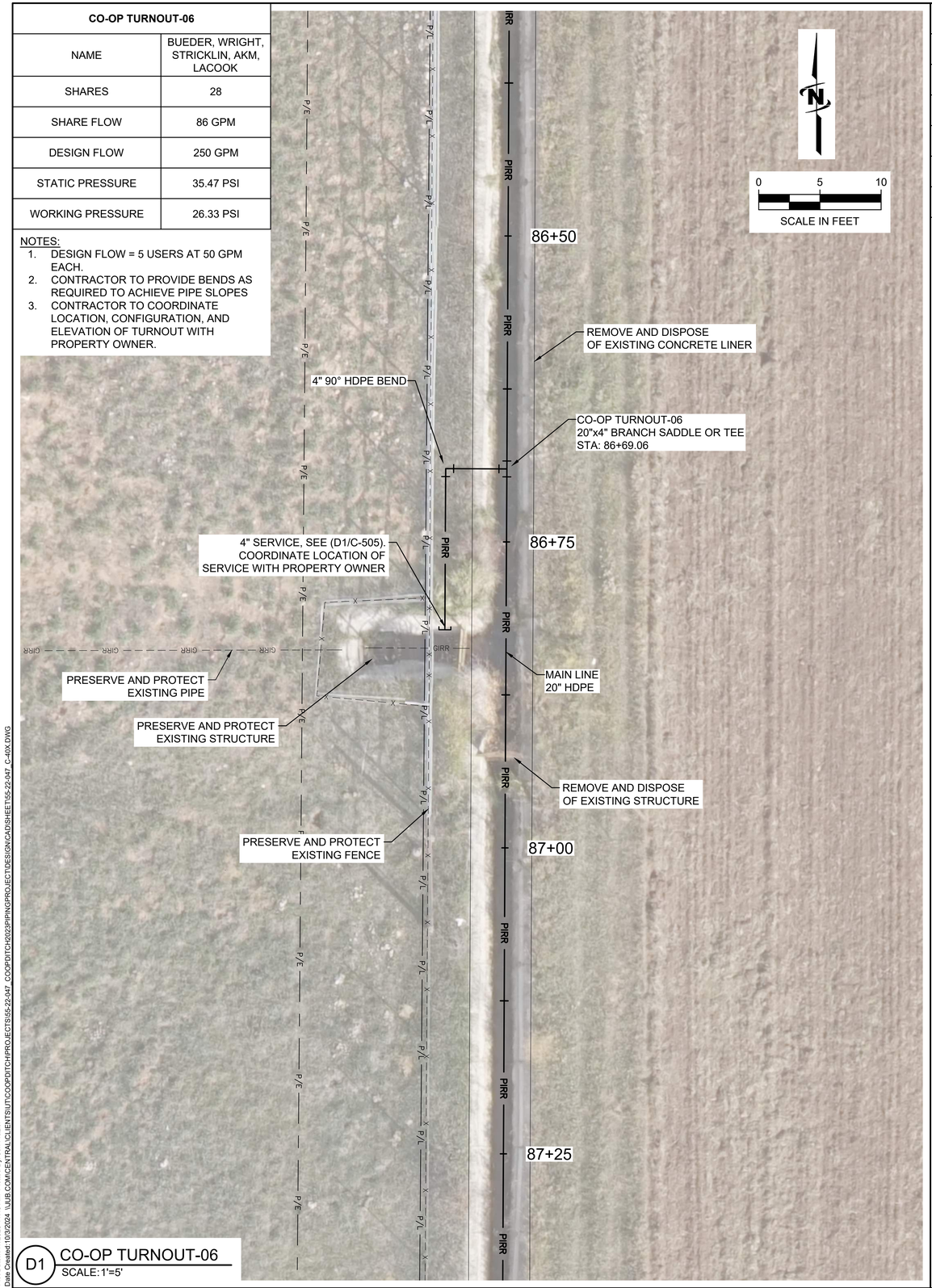

D1 CO-OP TURNOUT-06
SCALE: 1'=5'

CO-OP TURNOUT-07	
NAME	BURKMAN
SHARES	3
SHARE FLOW	9 GPM
DESIGN FLOW	50 GPM
STATIC PRESSURE	36.5 PSI
WORKING PRESSURE	26.91 PSI

NOTES:
1. DESIGN FLOW = 1 USER AT 50 GPM.
2. CONTRACTOR TO PROVIDE BENDS AS REQUIRED TO ACHIEVE PIPE SLOPES
3. CONTRACTOR TO COORDINATE LOCATION, CONFIGURATION, AND ELEVATION OF TURNOUT WITH PROPERTY OWNER.

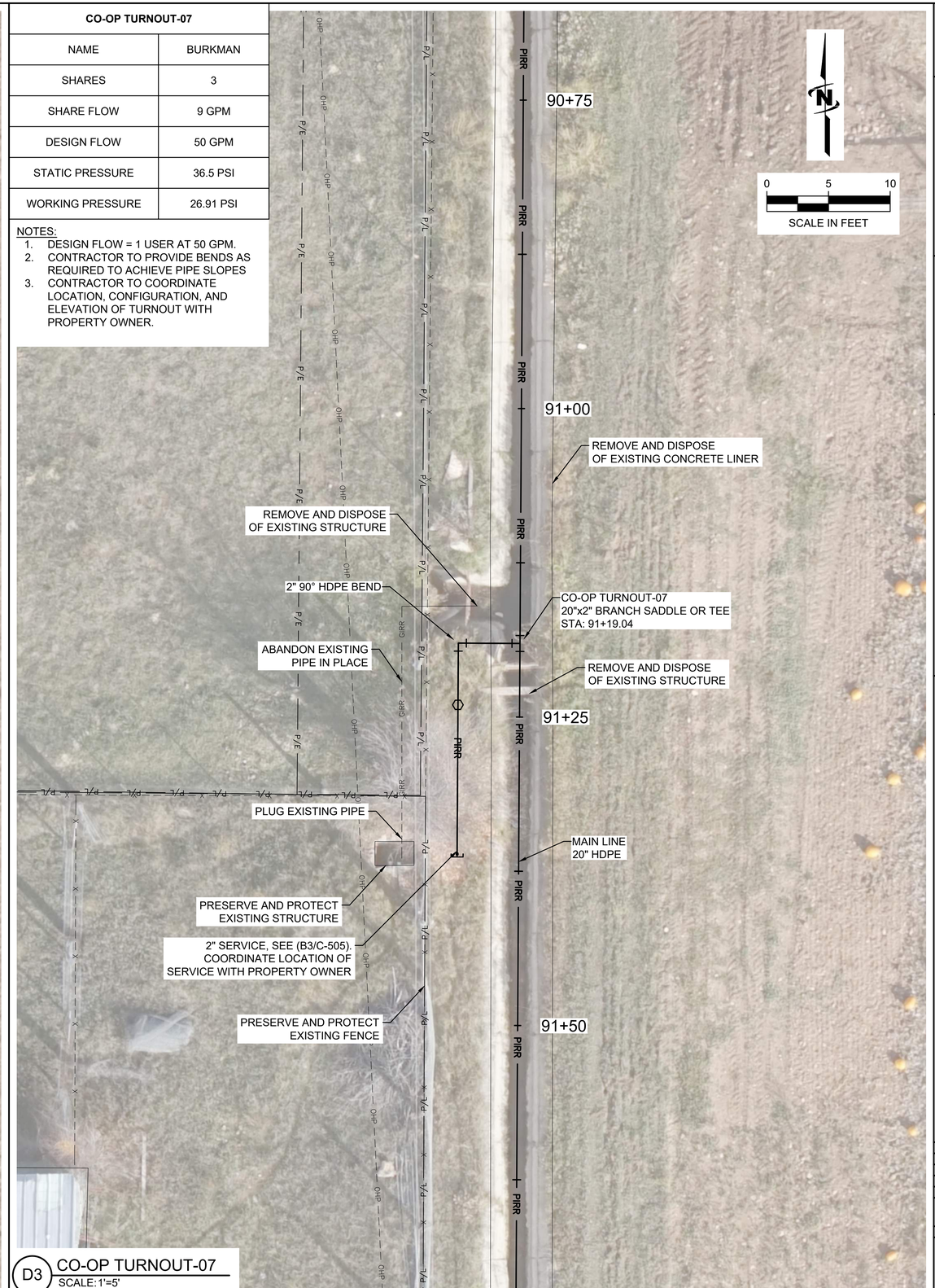

D3 CO-OP TURNOUT-07
SCALE: 1'=5'

J-U-B ENGINEERS, INC.

J-U-B ENGINEERS, INC.
466 North 900 West
Kaysville, UT 84037
Phone: 801.547.0393
www.jub.com

BID SET

REGISTERED PROFESSIONAL ENGINEER
97-186246-2202
BRIAN DEETER
07/10/25
STATE OF UTAH

REUSE OF DRAWINGS
J-U-B SHALL RETAIN ALL OWNERSHIP, PATENT, TRADE SECRET, COPYRIGHT AND OTHER RESERVED RIGHTS OF THESE DRAWINGS, AND THE SAME SHALL NOT BE REUSED WITHOUT J-U-B'S PRIOR WRITTEN CONSENT. ANY REUSE WITHOUT WRITTEN CONSENT BY J-U-B WILL BE AT CLIENTS SOLE RISK AND WITHOUT LIABILITY OR LEGAL EXPOSURE TO J-U-B.

NO.	DESCRIPTION	BY	APR.	DATE
	REVISION			

CO-OP/HSBCC CANAL PRESSURIZATION PROJECT
CO-OP & HSBCC

CO-OP TURNOUT-06 & TURNOUT-07

FILE : 55-22-047 C-40X
JUB PROJ. # : 55-22-047
DRAWN BY: JAS
DESIGN BY: JSF
CHECKED BY: JSF
ONE INCH
AT FULL SIZE, IF NOT ONE INCH, SCALE ACCORDINGLY
LAST UPDATED: 7/15/2025

SHEET NUMBER:
C-405

Plot Date:7/17/2025 11:48 AM Plotted By: Jon Frazier
Date Created:10/3/2024 \\JUB.COM\CENTRAL\CLIENTS\UT\COOPDITCH\PROJECTS\55-22-047_COOPDITCH2023\PIPING\PROJECT\DESIGN\CAD\SHEETS\55-22-047_C-40X.DWG

TURNOUT-08	
NAME	RILEY
SHARES	10
SHARE FLOW	30.7 GPM
DESIGN FLOW	50 GPM
STATIC PRESSURE	37.5 PSI
WORKING PRESSURE	27.8 PSI

TURNOUT-09	
NAME	WELCH, BURTON, WARNES, SMITH
SHARES	12
SHARE FLOW	36.8 GPM
DESIGN FLOW	200 GPM
STATIC PRESSURE	37.5 PSI
WORKING PRESSURE	27.8 PSI

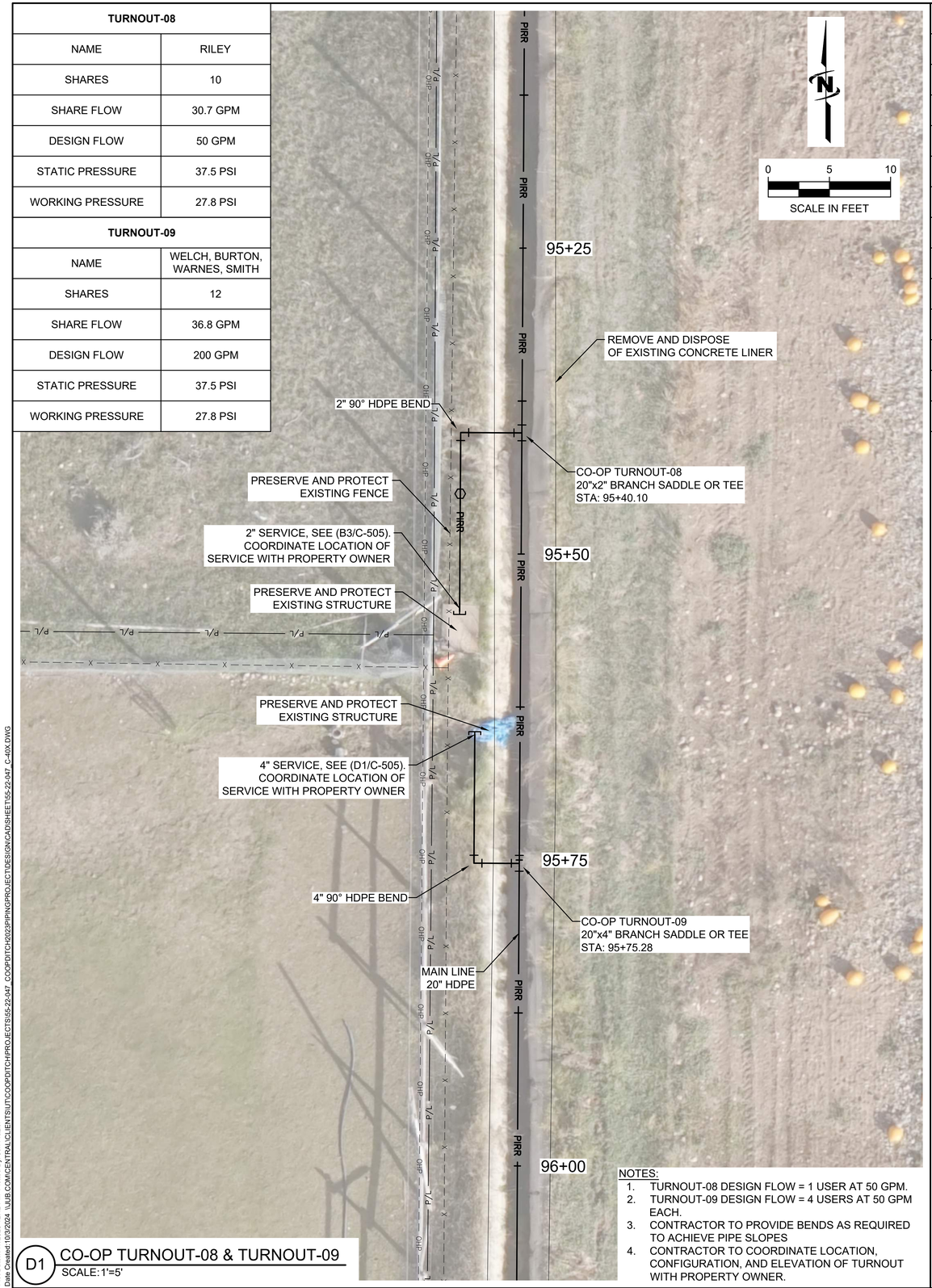

D1 CO-OP TURNOUT-08 & TURNOUT-09
SCALE: 1'=5'

NOTES:
1. TURNOUT-08 DESIGN FLOW = 1 USER AT 50 GPM.
2. TURNOUT-09 DESIGN FLOW = 4 USERS AT 50 GPM EACH.
3. CONTRACTOR TO PROVIDE BENDS AS REQUIRED TO ACHIEVE PIPE SLOPES
4. CONTRACTOR TO COORDINATE LOCATION, CONFIGURATION, AND ELEVATION OF TURNOUT WITH PROPERTY OWNER.

TURNOUT-10	
NAME	WRIGHT
SHARES	3
SHARE FLOW	9.2 GPM
DESIGN FLOW	50 GPM
STATIC PRESSURE	38 PSI
WORKING PRESSURE	28.3 PSI

TURNOUT-11	
NAME	CARLSON
SHARES	4
SHARE FLOW	12.3 GPM
DESIGN FLOW	50 GPM
STATIC PRESSURE	38 PSI
WORKING PRESSURE	28.47 PSI

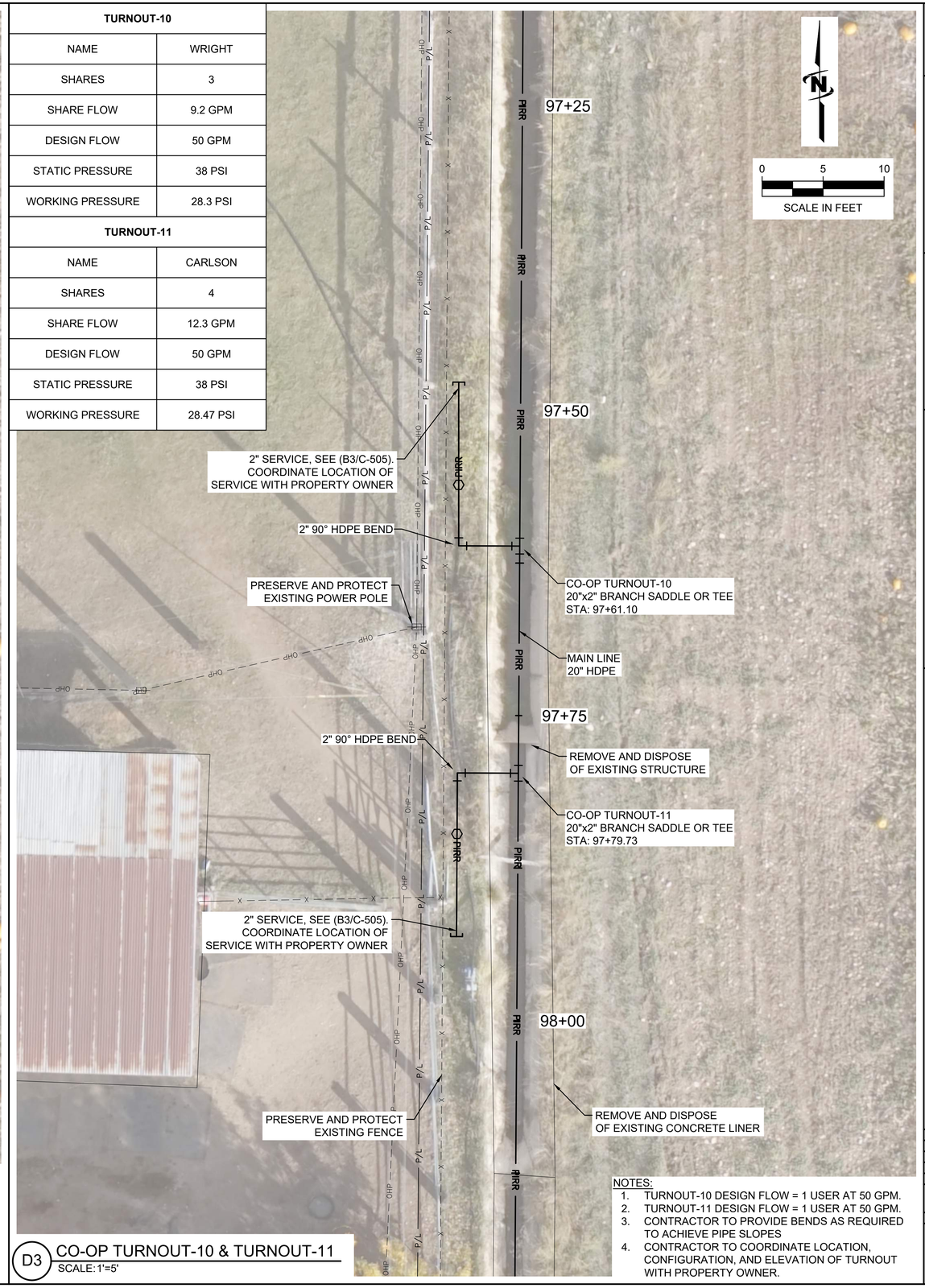

D3 CO-OP TURNOUT-10 & TURNOUT-11
SCALE: 1'=5'

NOTES:
1. TURNOUT-10 DESIGN FLOW = 1 USER AT 50 GPM.
2. TURNOUT-11 DESIGN FLOW = 1 USER AT 50 GPM.
3. CONTRACTOR TO PROVIDE BENDS AS REQUIRED TO ACHIEVE PIPE SLOPES
4. CONTRACTOR TO COORDINATE LOCATION, CONFIGURATION, AND ELEVATION OF TURNOUT WITH PROPERTY OWNER.

J-U-B ENGINEERS, INC.
J-U-B ENGINEERS, INC.
466 North 900 West
Kaysville, UT 84037
Phone: 801.547.0393
www.jub.com

BID SET

REGISTERED PROFESSIONAL ENGINEER
97-186246-2202
BRIAN DEETER
07/10/25
STATE OF UTAH

REUSE OF DRAWINGS
J-U-B SHALL RETAIN ALL COMMON LAW, STATUTORY, COPYRIGHT AND OTHER RESERVED RIGHTS OF THESE DRAWINGS, AND THE SAME SHALL NOT BE REUSED WITHOUT J-U-B'S PRIOR WRITTEN CONSENT. ANY REUSE WITHOUT WRITTEN CONSENT BY J-U-B WILL BE AT CLIENTS SCALE RISK AND WITHOUT LIABILITY OR LEGAL EXPOSURE TO J-U-B.

NO.	DESCRIPTION	BY	APR.	DATE
	REVISION			

CO-OP/HSBCC CANAL PRESSURIZATION PROJECT
CO-OP & HSBCC

CO-OP TURNOUT-08, 09, 10, & 11

FILE : 55-22-047_C-40X
JUB PROJ. # :55-22-047
DRAWN BY: JAS
DESIGN BY: JSF
CHECKED BY: JSF
ONE INCH
AT FULL SIZE, IF NOT ONE INCH, SCALE ACCORDINGLY
LAST UPDATED: 7/15/2025

SHEET NUMBER:
C-406

Plot Date:7/17/2025 12:42 PM Plotted By: Jon Frazier
Date Created:10/3/2024 \\JUB.COM\CENTRAL\CLIENTS\UT\COOP\DITCH\PROJECTS\55-22-047_COOP\DITCH2023\PIPING\PROJECT\DESIGN\CAD\SHEET\55-22-047_C-40X.DWG

CO-OP TURNOUT-13	
NAME	BUSICK
SHARES	12
SHARE FLOW	36.8 GPM
DESIGN FLOW	50 GPM
STATIC PRESSURE	43 PSI
WORKING PRESSURE	31.6 PSI

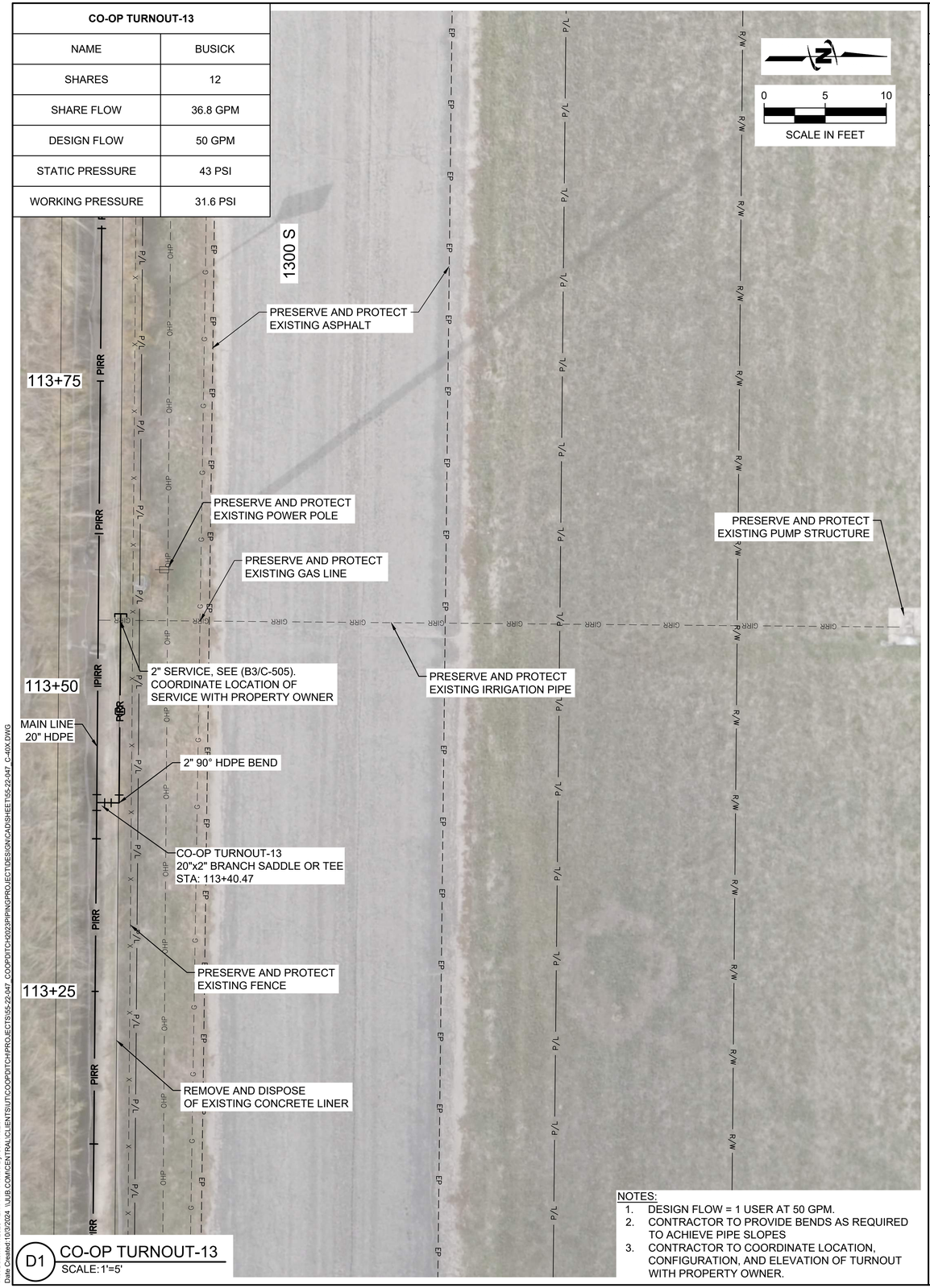

D1 CO-OP TURNOUT-13
SCALE: 1'=5'

NOTES:
1. DESIGN FLOW = 1 USER AT 50 GPM.
2. CONTRACTOR TO PROVIDE BENDS AS REQUIRED TO ACHIEVE PIPE SLOPES
3. CONTRACTOR TO COORDINATE LOCATION, CONFIGURATION, AND ELEVATION OF TURNOUT WITH PROPERTY OWNER.

CO-OP TURNOUT-14	
NAME	GREGORY
SHARES	12
SHARE FLOW	36.8 GPM
DESIGN FLOW	50 GPM
STATIC PRESSURE	43.4 PSI
WORKING PRESSURE	32.2 PSI

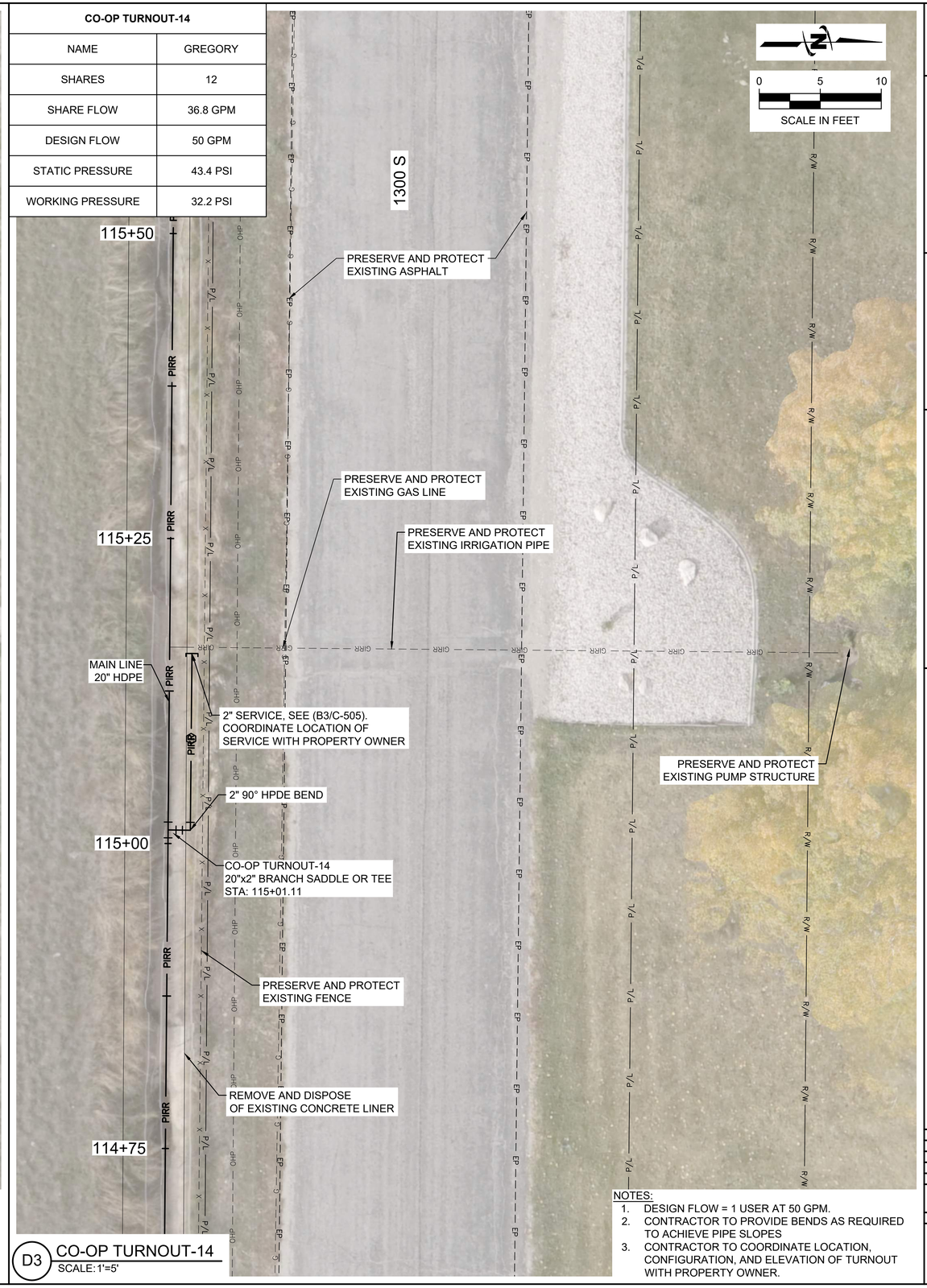

D3 CO-OP TURNOUT-14
SCALE: 1'=5'

NOTES:
1. DESIGN FLOW = 1 USER AT 50 GPM.
2. CONTRACTOR TO PROVIDE BENDS AS REQUIRED TO ACHIEVE PIPE SLOPES
3. CONTRACTOR TO COORDINATE LOCATION, CONFIGURATION, AND ELEVATION OF TURNOUT WITH PROPERTY OWNER.

J-U-B ENGINEERS, INC.
J-U-B ENGINEERS, INC.
466 North 900 West
Kaysville, UT 84037
Phone: 801.547.0393
www.jub.com

BID SET

REGISTERED PROFESSIONAL ENGINEER
97-186246-2202
BRIAN DEETER
07/10/25
STATE OF UTAH

REUSE OF DRAWINGS
J-U-B SHALL RETAIN ALL COMMON LAW, STATUTORY, COPYRIGHT AND OTHER RESERVED RIGHTS OF THESE DRAWINGS, AND THE SAME SHALL NOT BE REUSED WITHOUT J-U-B'S PRIOR WRITTEN CONSENT. ANY REUSE WITHOUT WRITTEN CONSENT BY J-U-B WILL BE AT CLIENTS SOLE RISK AND WITHOUT LIABILITY OR LEGAL EXPOSURE TO J-U-B.

NO.	DESCRIPTION	BY	APR.	DATE
	REVISION			

CO-OP/HSBCC CANAL PRESSURIZATION PROJECT
CO-OP & HSBCC

CO-OP TURNOUT-13 & TURNOUT-14

FILE: 55-22-047_C-40X
JUB PROJ. #: 55-22-047
DRAWN BY: JAS
DESIGN BY: JSF
CHECKED BY: JSF
ONE INCH
AT FULL SIZE, IF NOT ONE INCH, SCALE ACCORDINGLY
LAST UPDATED: 7/15/2025

SHEET NUMBER:
C-407

Plot Date:7/17/2025 12:44 PM Plotted By: Jon Frazier
Date Created:10/3/2024 \\JUB.COM\CENTRAL\CLIENTS\UT\COOPDITCH\PROJECTS\55-22-047_COOPDITCH\2023\PIPING\PROJECT\DESIGN\CAD\SHEETS\55-22-047_C-40X.DWG

CO-OP TURNOUT-15	
NAME	BERTRAM
SHARES	15
SHARE FLOW	46.1 GPM
DESIGN FLOW	50 GPM
STATIC PRESSURE	44.0 PSI
WORKING PRESSURE	32.5 PSI

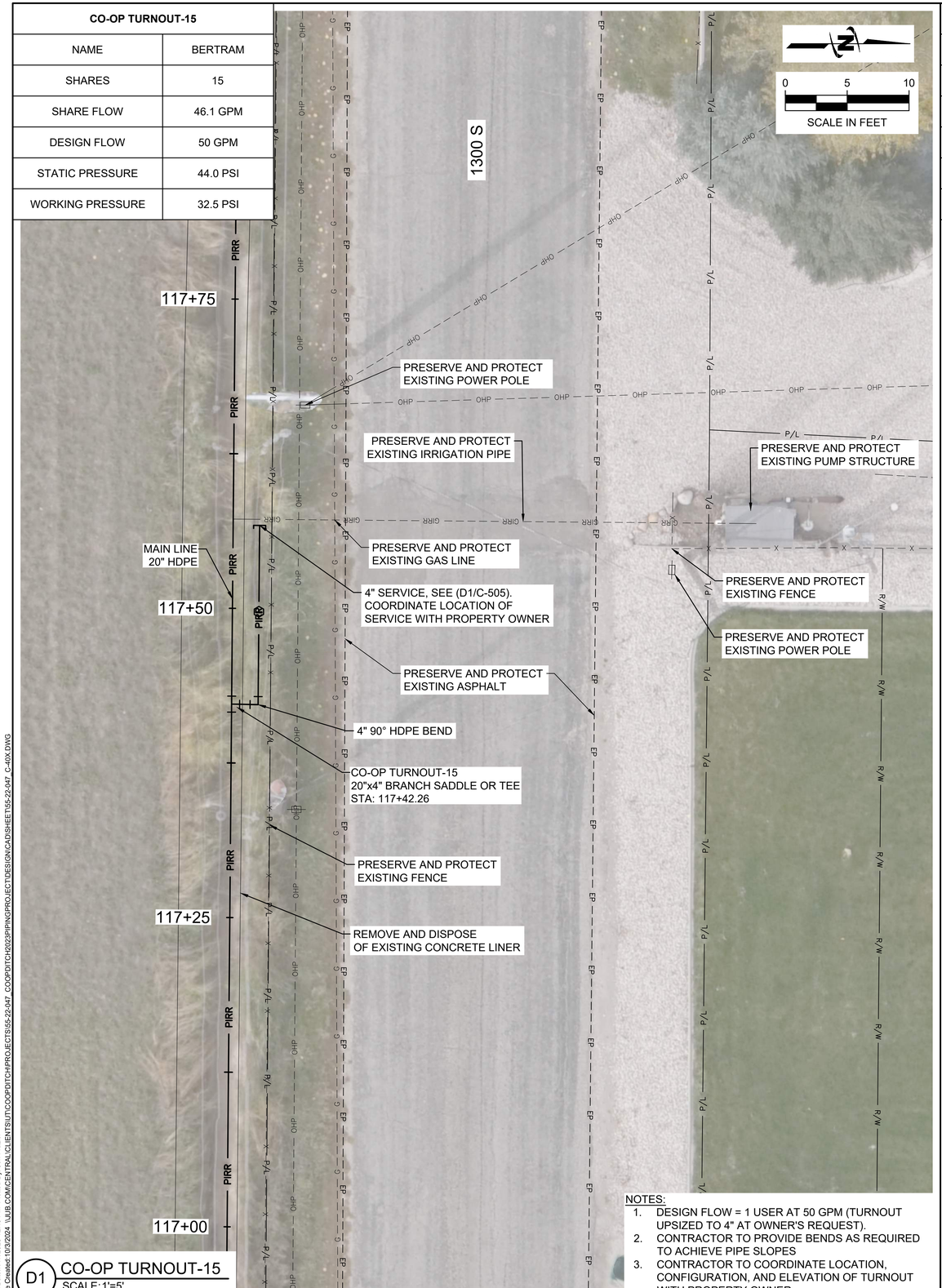

NOTES:
1. DESIGN FLOW = 1 USER AT 50 GPM (TURNOUT UPSIZED TO 4" AT OWNER'S REQUEST).
2. CONTRACTOR TO PROVIDE BENDS AS REQUIRED TO ACHIEVE PIPE SLOPES
3. CONTRACTOR TO COORDINATE LOCATION, CONFIGURATION, AND ELEVATION OF TURNOUT WITH PROPERTY OWNER.

D1 CO-OP TURNOUT-15
SCALE: 1'=5'

CO-OP TURNOUT-16	
NAME	KUNKEL
SHARES	8.5
SHARE FLOW	26.1 GPM
DESIGN FLOW	50 GPM
STATIC PRESSURE	44.9 PSI
WORKING PRESSURE	33.2 PSI

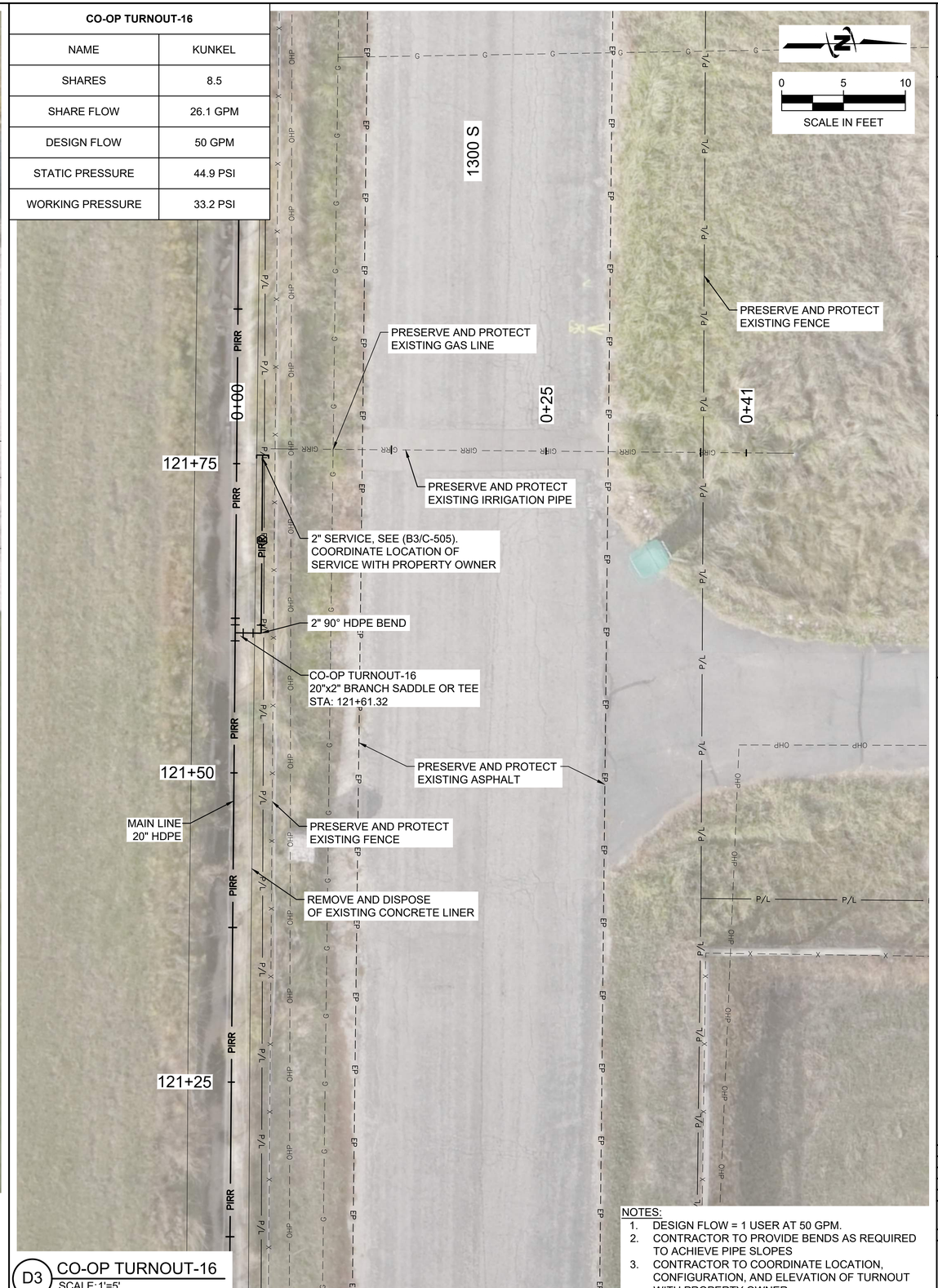

NOTES:
1. DESIGN FLOW = 1 USER AT 50 GPM.
2. CONTRACTOR TO PROVIDE BENDS AS REQUIRED TO ACHIEVE PIPE SLOPES
3. CONTRACTOR TO COORDINATE LOCATION, CONFIGURATION, AND ELEVATION OF TURNOUT WITH PROPERTY OWNER.

D3 CO-OP TURNOUT-16
SCALE: 1'=5'

J-U-B ENGINEERS, INC.
J-U-B ENGINEERS, INC.
466 North 900 West
Kaysville, UT 84037
Phone: 801.547.0393
www.jub.com

BID SET

REGISTERED PROFESSIONAL ENGINEER
97-186246-2202
BRIAN DEETER
07/10/25
STATE OF UTAH

REUSE OF DRAWINGS
J-U-B SHALL RETAIN ALL OWNERSHIP, STATUTORY, COPYRIGHT AND OTHER RESERVED RIGHTS OF THESE DRAWINGS, AND THE SAME SHALL NOT BE REUSED WITHOUT J-U-B'S PRIOR WRITTEN CONSENT. ANY REUSE WITHOUT WRITTEN CONSENT BY J-U-B WILL BE AT CLIENTS SOLE RISK AND WITHOUT LIABILITY OR LEGAL EXPOSURE TO J-U-B.

NO.	DESCRIPTION	BY	APR.	DATE
	REVISION			

CO-OP/HSBCC CANAL PRESSURIZATION PROJECT
CO-OP & HSBCC

CO-OP TURNOUT-15 & TURNOUT-16

FILE : 55-22-047_C-40X
JUB PROJ. # : 55-22-047
DRAWN BY: JAS
DESIGN BY: JSF
CHECKED BY: JSF
ONE INCH
AT FULL SIZE, IF NOT ONE INCH, SCALE ACCORDINGLY
LAST UPDATED: 7/15/2025

SHEET NUMBER:
C-408

Plot Date:7/17/2025 12:46 PM Plotted By: Jon Frazier
Date Created:10/3/2024 \\JUB.COM\CENTRAL\CLIENTS\UT\COOPDITCH\PROJECTS\55-22-047_COOPDITCH2023PIPING\PROJECT\DESIGN\CAD\SHEET\55-22-047_C-40X.DWG

CO-OP TURNOUT-18	
NAME	OLSEN, WHITCHER
SHARES	84.5
SHARE FLOW	259.6 GPM
DESIGN FLOW	411 GPM
STATIC PRESSURE	47.3 PSI
WORKING PRESSURE	34.3 PSI

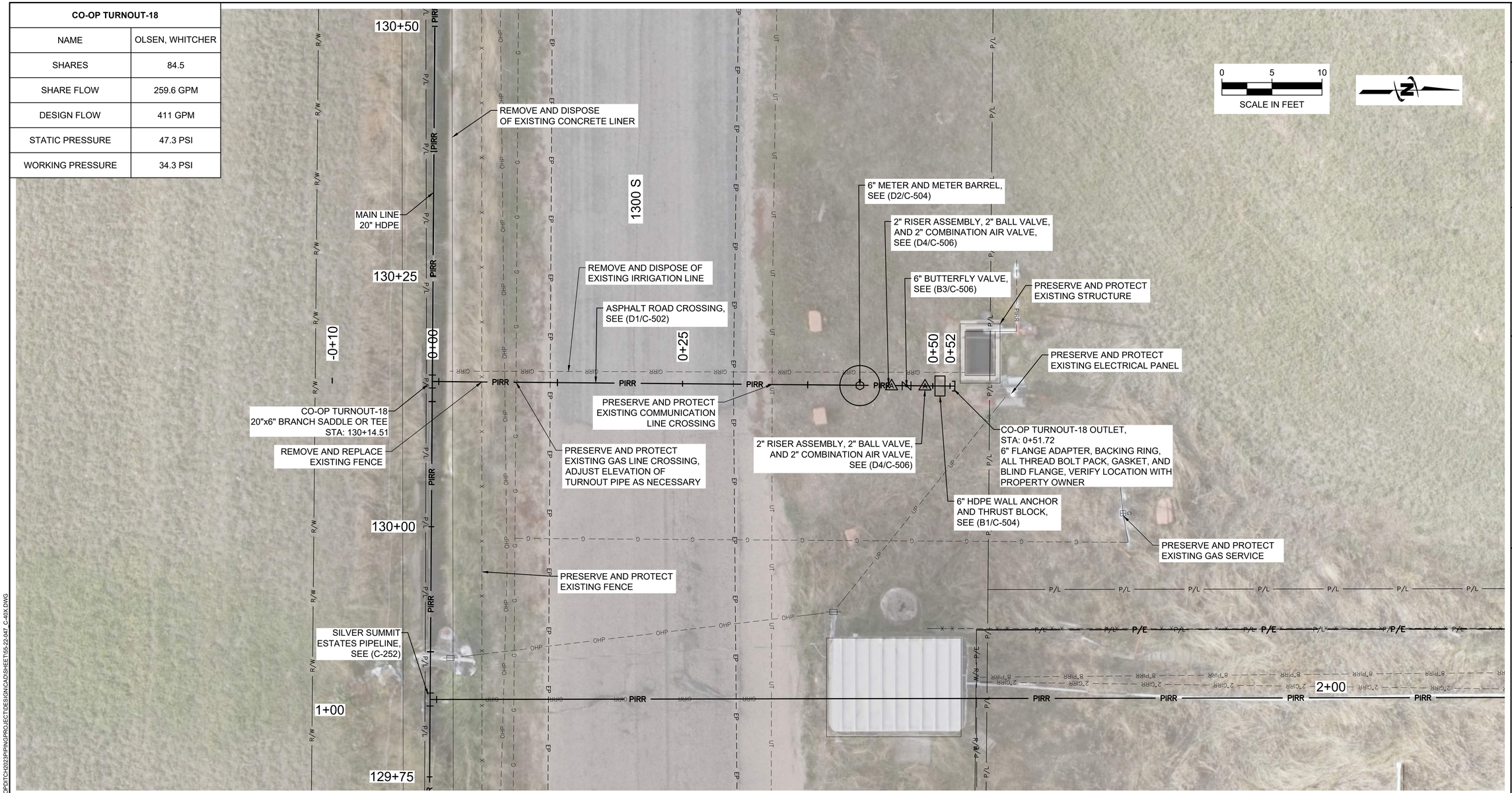

NOTES:
1. CONTRACTOR TO PROVIDE BENDS AS REQUIRED TO ACHIEVE PIPE SLOPES
2. CONTRACTOR TO COORDINATE LOCATION, CONFIGURATION, AND ELEVATION OF TURNOUT WITH PROPERTY OWNER.

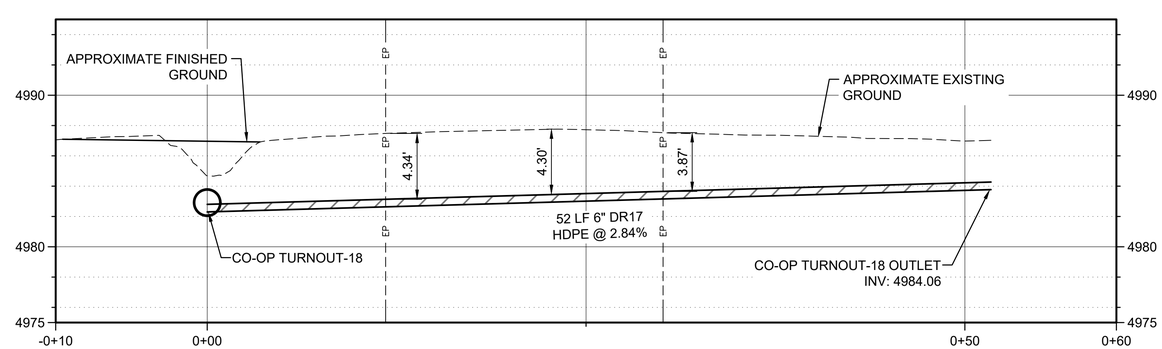

J-U-B ENGINEERS, INC.
J-U-B ENGINEERS, INC.
466 North 900 West
Kaysville, UT 84037
Phone: 801.547.0393
www.jub.com

BID SET

REGISTERED PROFESSIONAL ENGINEER 97-186246-2202 BRIAN DEETER 07/10/25 STATE OF UTAH

REUSE OF DRAWINGS
J-U-B SHALL RETAIN ALL COMMON LAW, STATUTORY, COPYRIGHT AND OTHER RESERVED RIGHTS OF THESE DRAWINGS, AND THE SAME SHALL NOT BE REUSED WITHOUT J-U-B'S PRIOR WRITTEN CONSENT. ANY REUSE WITHOUT WRITTEN CONSENT BY J-U-B WILL BE AT CLIENTS SOLE RISK AND WITHOUT LIABILITY OR LEGAL EXPOSURE TO J-U-B.

NO.	DESCRIPTION	BY	APR.	DATE
	REVISION			

CO-OP/HSBCC CANAL PRESSURIZATION PROJECT
CO-OP & HSBCC

CO-OP TURNOUT-18

FILE : 55-22-047 C-40X
JUB PROJ. # :55-22-047
DRAWN BY: JAS
DESIGN BY: JSF
CHECKED BY: JSF
ONE INCH
AT FULL SIZE, IF NOT ONE INCH, SCALE ACCORDINGLY
LAST UPDATED: 7/15/2025

SHEET NUMBER:
C-409

Plot Date:7/17/2025 12:52 PM Plotted By: Jon Frazier
Date Created:10/3/2024 \\JUB.COM\CENTRAL\CLIENTS\UT\COOPDITCH\PROJECTS\55-22-047_COOPDITCH2023PIPINGPROJECT\DESIGN\CAD\SHEETS\55-22-047_C-40X.DWG

HSBCC TURNOUT-17	
NAME	SNOW BASIN RESORT
SHARES	119
SHARE FLOW	563 GPM (1.25 CFS)
DESIGN FLOW	782 GPM (1.75 CFS)
STATIC PRESSURE	56 PSI
WORKING PRESSURE	38 PSI

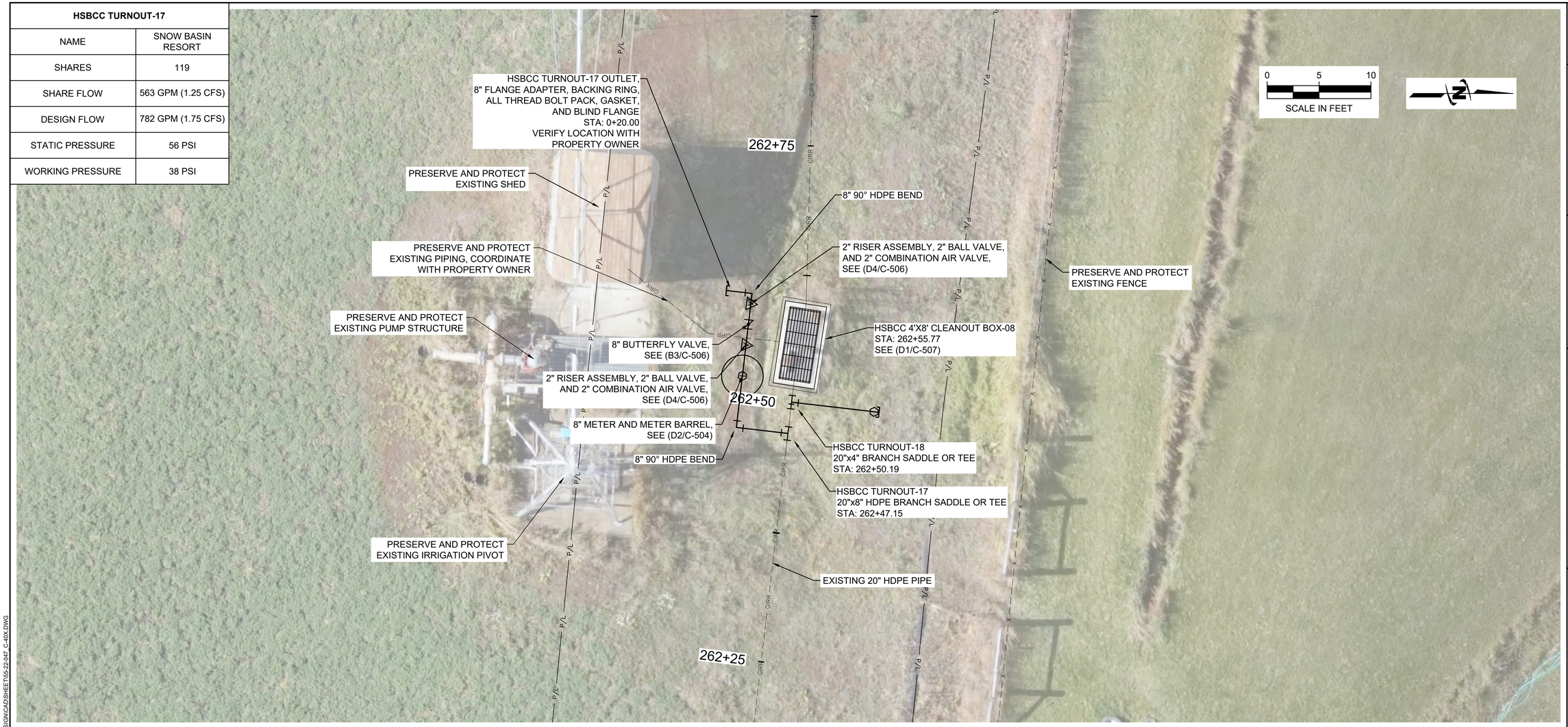

NOTES:

1. CONTRACTOR TO PROVIDE BENDS AS REQUIRED TO ACHIEVE PIPE SLOPES
2. CONTRACTOR TO COORDINATE LOCATION, CONFIGURATION, AND ELEVATION OF TURNOUT WITH PROPERTY OWNER.

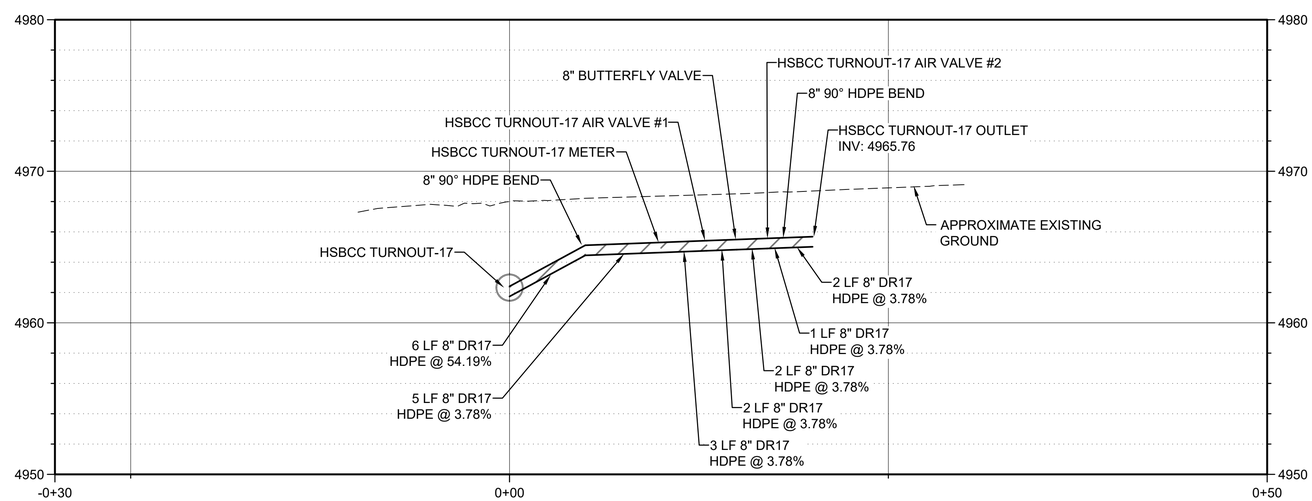

J-U-B ENGINEERS, INC.

J-U-B ENGINEERS, INC.
466 North 900 West
Kaysville, UT 84037
Phone: 801.547.0393
www.jub.com

BID SET

REGISTERED PROFESSIONAL ENGINEER
97-186246-2202
BRIAN DEETER
07/10/25
STATE OF UTAH

REUSE OF DRAWINGS
J-U-B SHALL RETAIN ALL COMMON LAW, STATUTORY, COPYRIGHT AND OTHER RESERVED RIGHTS OF THESE DRAWINGS, AND THE SAME SHALL NOT BE REUSED WITHOUT J-U-B'S PRIOR WRITTEN CONSENT. ANY REUSE WITHOUT WRITTEN CONSENT BY J-U-B WILL BE AT CLIENTS SOLE RISK AND WITHOUT LIABILITY OR LEGAL EXPOSURE TO J-U-B.

NO.	DESCRIPTION	BY	APR.	DATE
	REVISION			

CO-OP/HSBCC CANAL PRESSURIZATION PROJECT
CO-OP & HSBCC

HSBCC TURNOUT-17

FILE : 55-22-047_C-40X
JUB PROJ. # :55-22-047
DRAWN BY: JAS
DESIGN BY: JSF
CHECKED BY: JSF
ONE INCH
AT FULL SIZE, IF NOT ONE INCH, SCALE ACCORDINGLY
LAST UPDATED: 7/15/2025

SHEET NUMBER:
C-410

Plot Date:7/17/2025 12:54 PM Plotted By: Jon Frazier
Date Created:10/3/2024 \\JUB.COM\CENTRAL\CLIENTS\UT\COOPDITCH\PROJECTS\55-22-047_COOPDITCH2023\PIPINGPROJECT\DESIGN\CAD\SHEETS\55-22-047_C-40X.DWG

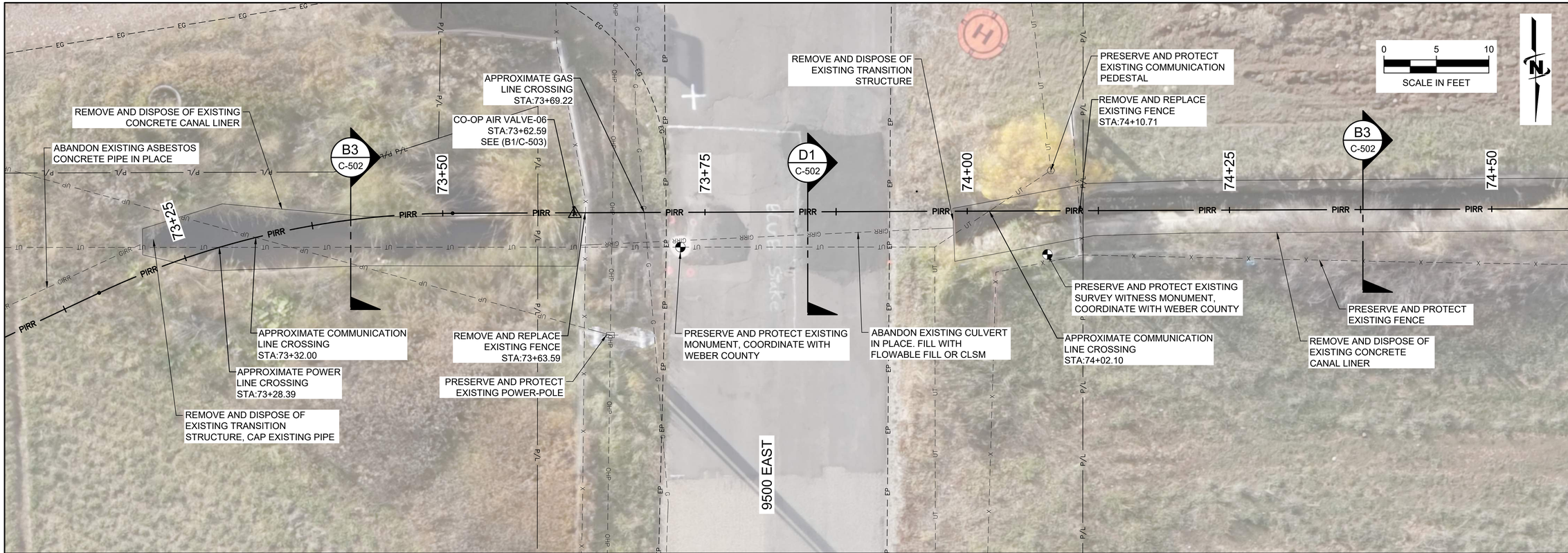

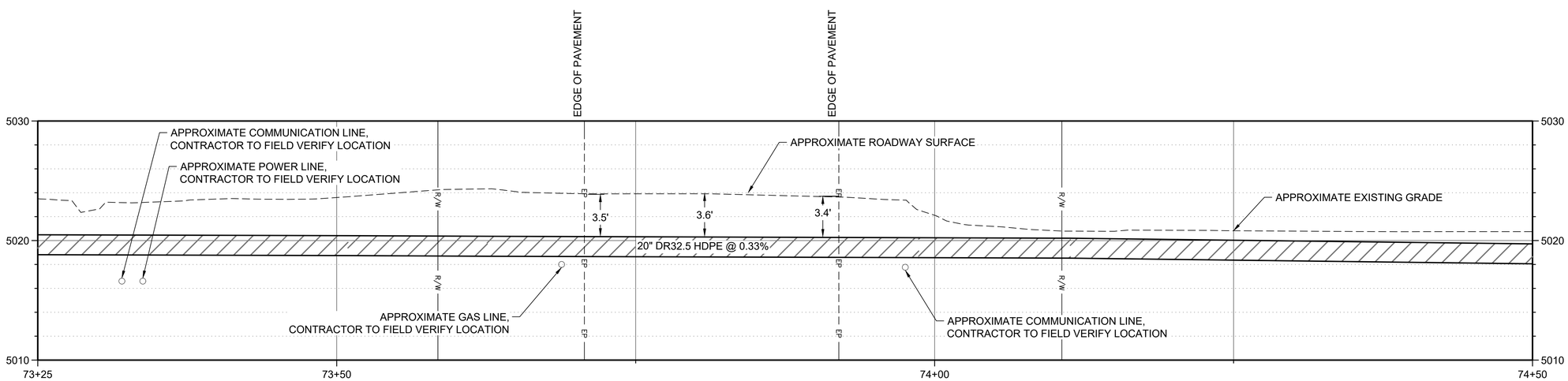

J-U-B ENGINEERS, INC.

J-U-B ENGINEERS, INC.
466 North 900 West
Kaysville, UT 84037
Phone: 801.547.0393
www.jub.com

BID SET

REGISTERED PROFESSIONAL ENGINEER
97-186246-2202
BRIAN DEETER
07/10/25
STATE OF UTAH

REUSE OF DRAWINGS
J-U-B SHALL RETAIN ALL COMMON LAW, STATUTORY, COPYRIGHT AND OTHER RESERVED RIGHTS OF THESE DRAWINGS, AND THE SAME SHALL NOT BE REUSED WITHOUT J-U-B'S PRIOR WRITTEN CONSENT. ANY REUSE WITHOUT WRITTEN CONSENT BY J-U-B WILL BE AT CLIENT'S SOLE RISK AND WITHOUT LIABILITY OR LEGAL EXPOSURE TO J-U-B.

NO.	DESCRIPTION	BY	APR.	DATE
	REVISION			

CO-OP/HSBCC CANAL PRESSURIZATION PROJECT
CO-OP & HSBCC

9500 E ROAD CROSSING

FILE : 55-22-047_C-413
JUB PROJ. # :55-22-047
DRAWN BY: JAS
DESIGN BY: JSF
CHECKED BY: JSF
ONE INCH
AT FULL SIZE, IF NOT ONE INCH, SCALE ACCORDINGLY
LAST UPDATED: 7/15/2025

SHEET NUMBER:
C-411

Plot Date:7/17/2025 1:02 PM Plotted By: Jon Frazier
Date Created:7/15/2025 \\JUB.COM\CENTRAL\CLIENTS\UT\COOPDITCH\PROJECTS\55-22-047_COOPDITCH2023\PIN\GPROJECT\DESIGN\CAD\SHEETS\55-22-047_C-413.DWG

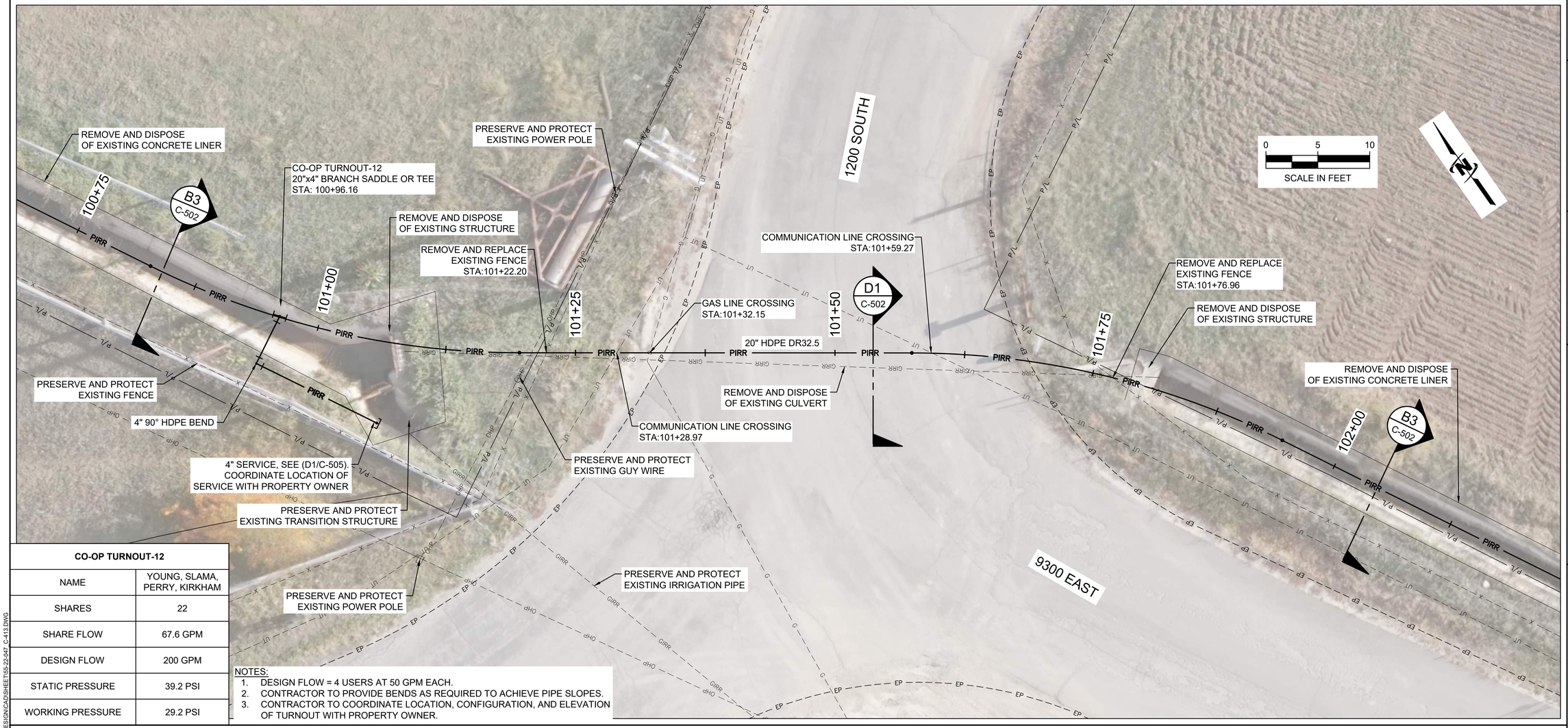

CO-OP TURNOUT-12	
NAME	YOUNG, SLAMA, PERRY, KIRKHAM
SHARES	22
SHARE FLOW	67.6 GPM
DESIGN FLOW	200 GPM
STATIC PRESSURE	39.2 PSI
WORKING PRESSURE	29.2 PSI

NOTES:
1. DESIGN FLOW = 4 USERS AT 50 GPM EACH.
2. CONTRACTOR TO PROVIDE BENDS AS REQUIRED TO ACHIEVE PIPE SLOPES.
3. CONTRACTOR TO COORDINATE LOCATION, CONFIGURATION, AND ELEVATION OF TURNOUT WITH PROPERTY OWNER.

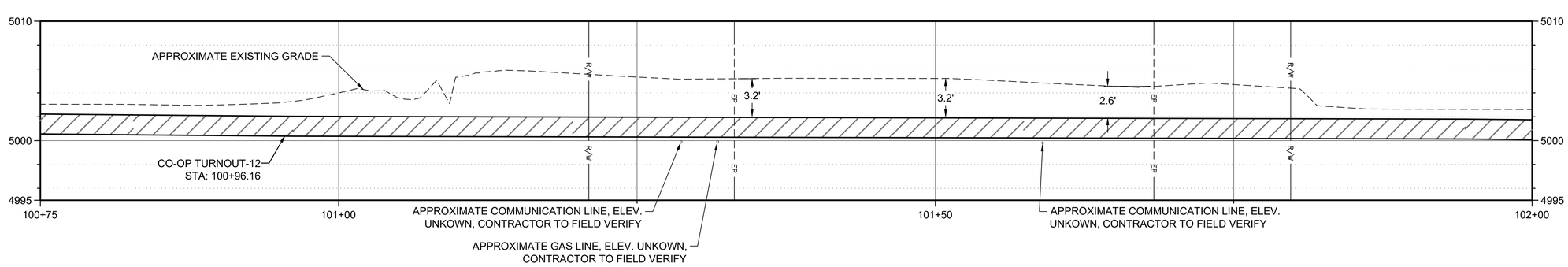

J-U-B ENGINEERS, INC.
466 North 900 West
Kaysville, UT 84037
Phone: 801.547.0393
www.jub.com

BID SET

REGISTERED PROFESSIONAL ENGINEER 97-186246-2202 BRIAN DEETER 07/10/25 STATE OF UTAH

REUSE OF DRAWINGS
J-U-B SHALL RETAIN ALL OCCUPATIONAL RIGHTS, INCLUDING COPYRIGHT AND OTHER RESERVED RIGHTS OF THESE DRAWINGS, AND THE SAME SHALL NOT BE REUSED WITHOUT J-U-B'S PRIOR WRITTEN CONSENT. ANY REUSE WITHOUT WRITTEN CONSENT BY J-U-B WILL BE AT CLIENTS SOLE RISK AND WITHOUT LIABILITY OR LEGAL EXPOSURE TO J-U-B.

NO.	DESCRIPTION	BY	APR.	DATE
	REVISION			

CO-OP/HSBCC CANAL PRESSURIZATION PROJECT
CO-OP & HSBCC

1200 S ROAD CROSSING & CO-OP TURNOUT-12

FILE : 55-22-047_C-413
JUB PROJ. # : 55-22-047
DRAWN BY: JAS
DESIGN BY: JSF
CHECKED BY: JSF
ONE INCH
AT FULL SIZE, IF NOT ONE INCH, SCALE ACCORDINGLY
LAST UPDATED: 7/15/2025

SHEET NUMBER:
C-412

Plot Date:7/17/2025 1:54 PM, Plotted By: Jon Frazier
Date Created:7/15/2025 \\JUB.COM\CENTRAL\CLIENTS\UT\COOPDITCH\PROJECTS\55-22-047_COOPDITCH2023PIPING\PROJECT\DESIGN\CAD\SHEET\55-22-047_C-413.DWG

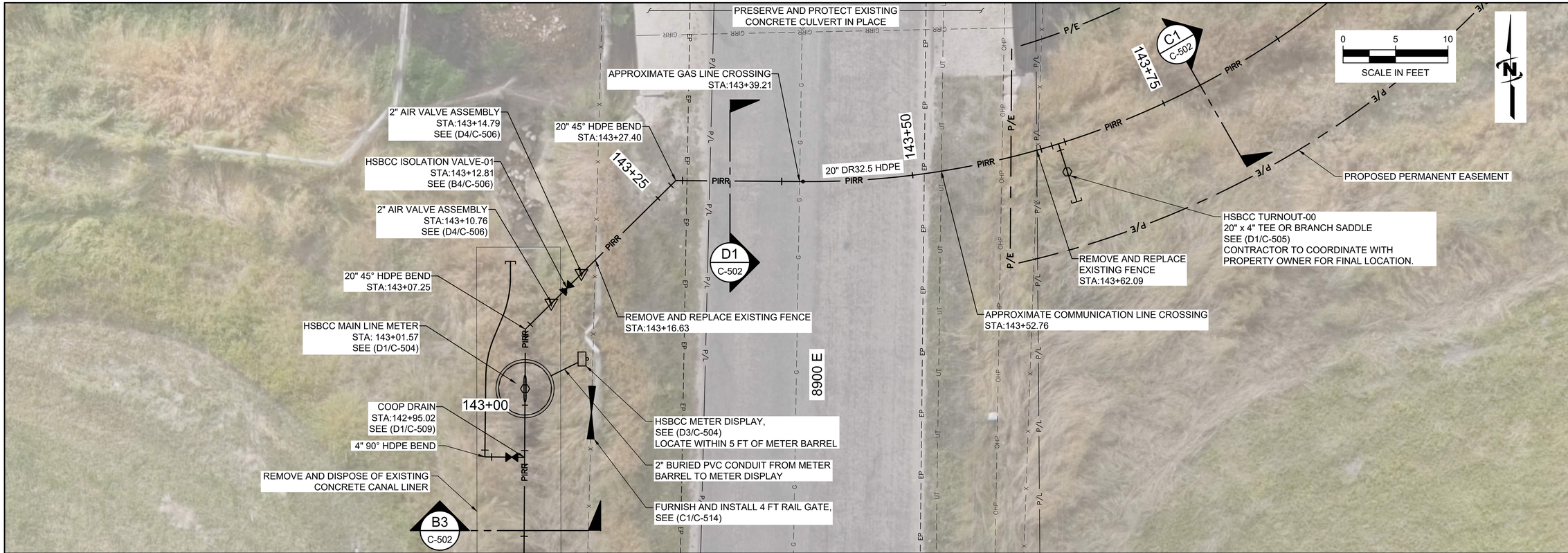

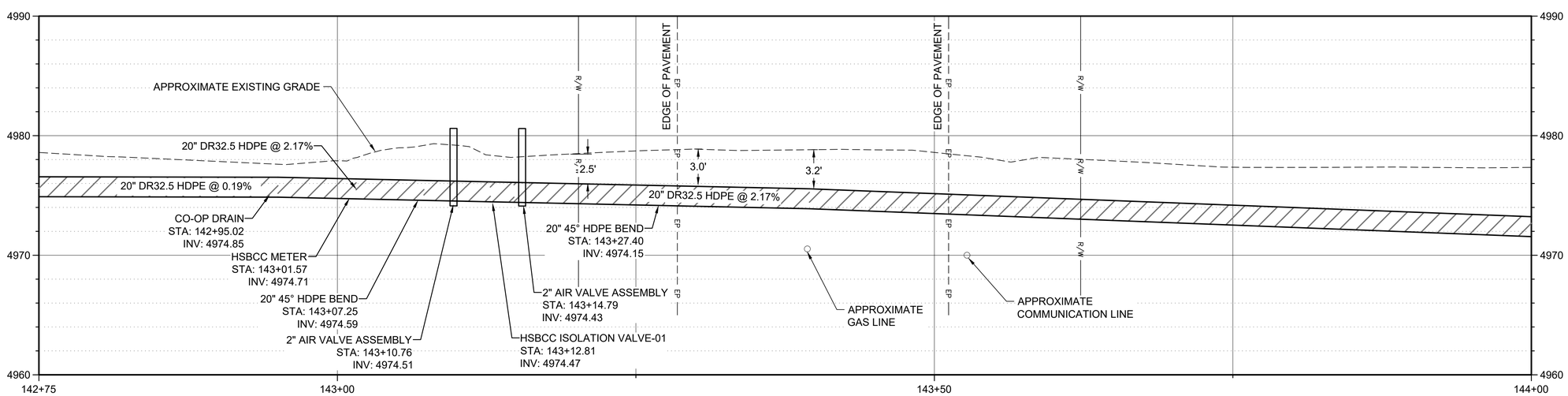

J-U-B ENGINEERS, INC.

J-U-B ENGINEERS, INC.
466 North 900 West
Kaysville, UT 84037
Phone: 801.547.0393
www.jub.com

BID SET

REGISTERED PROFESSIONAL ENGINEER 97-186246-2202 BRIAN DEETER 07/10/25 STATE OF UTAH

REUSE OF DRAWINGS
J-U-B SHALL RETAIN ALL COMMON LAW, STATUTORY, COPYRIGHT AND OTHER RESERVED RIGHTS OF THESE DRAWINGS, AND THE SAME SHALL NOT BE REUSED WITHOUT J-U-B'S PRIOR WRITTEN CONSENT. ANY REUSE WITHOUT WRITTEN CONSENT BY J-U-B WILL BE AT CLIENTS SOLE RISK AND WITHOUT LIABILITY OR LEGAL EXPOSURE TO J-U-B.

NO.	DESCRIPTION	BY	APR.	DATE
	REVISION			

CO-OP/HSBCC CANAL PRESSURIZATION PROJECT
CO-OP & HSBCC

8900 E ROAD CROSSING

FILE : 55-22-047_C-413
JUB PROJ. # :55-22-047
DRAWN BY: JAS
DESIGN BY: JSF
CHECKED BY: JSF
ONE INCH
AT FULL SIZE, IF NOT ONE INCH, SCALE ACCORDINGLY
LAST UPDATED: 7/18/2025

SHEET NUMBER:
C-413

Plot Date:7/21/2025 8:58 AM Plotted By: Jon Frazier
Date Created:7/17/2025 \\JUB.COM\CENTRAL\CLIENTS\UT\COOPDITCH\PROJECTS\55-22-047_COOPDITCH2023\PRNG\PROJECT\DESIGN\CAD\SHEET\55-22-047_C-413.DWG

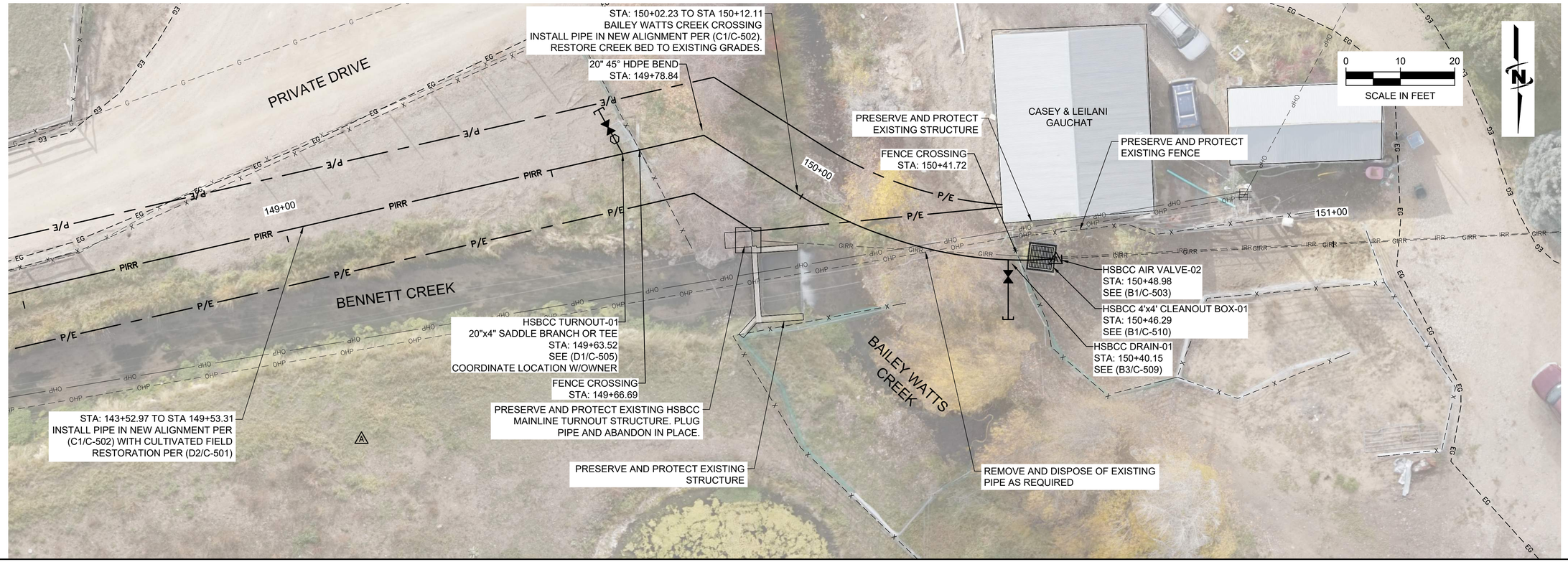

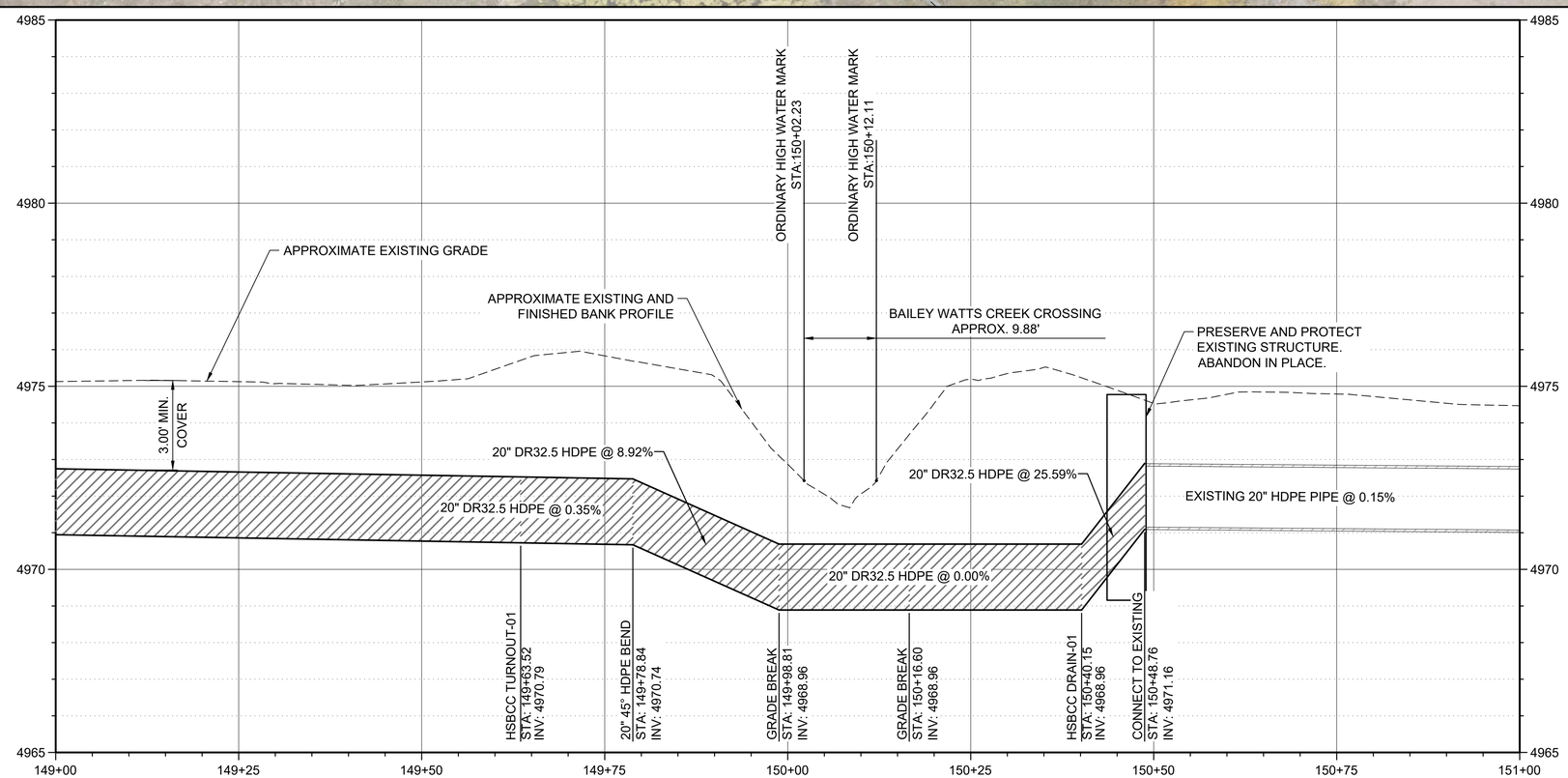

J-U-B ENGINEERS, INC.

J-U-B ENGINEERS, INC.
466 North 900 West
Kaysville, UT 84037
Phone: 801.547.0393
www.jub.com

BID SET

REGISTERED PROFESSIONAL ENGINEER
97-186246-2202
BRIAN DEETER
07/10/25
STATE OF UTAH

REUSE OF DRAWINGS
J-U-B SHALL RETAIN ALL COMMON LAW, STATUTORY, COPYRIGHT AND OTHER RESERVED RIGHTS OF THESE DRAWINGS, AND THE SAME SHALL NOT BE REUSED WITHOUT J-U-B'S PRIOR WRITTEN CONSENT. ANY REUSE WITHOUT WRITTEN CONSENT BY J-U-B WILL BE AT CLIENTS SOLE RISK AND WITHOUT LIABILITY OR LEGAL EXPOSURE TO J-U-B.

NO.	DESCRIPTION	BY	APR.	DATE
	REVISION			

CO-OP/HSBCC CANAL PRESSURIZATION PROJECT
CO-OP & HSBCC

BAILEY WATTS CREEK STREAM CROSSING

FILE : 55-22-047_C-40X_STREAMS
JUB PROJ. # :55-22-047
DRAWN BY: JAS
DESIGN BY: JSF
CHECKED BY: JSF
ONE INCH
AT FULL SIZE, IF NOT ONE INCH, SCALE ACCORDINGLY
LAST UPDATED: 7/15/2025

SHEET NUMBER:
C-414

Plot Date:7/21/2025 9:04 AM Plotted By: Jon Frazier
Date Created:9/12/2024 \\JUB.COM\CENTRAL\CLIENTS\UT\COOPDITCH\PROJECTS\55-22-047_COOPDITCH2023\PIPINGPROJECT\DESIGN\CAD\SHEETS\55-22-047_C-40X_STREAMS.DWG

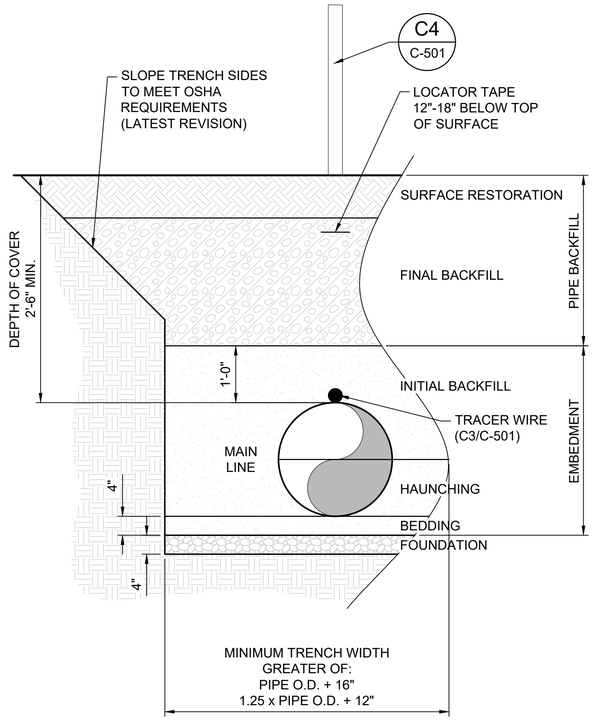

B1 TYPICAL TRENCH EXCAVATION AND BACKFILL
SCALE:NOT TO SCALE

TRENCH BACKFILL NOTES:

1. SURFACE RESTORATION:
   A. SURFACE RESTORATION SHALL MATCH EXISTING EXCAVATED SURFACE.
   B. SEE DETAILS ON (C-501) FOR TYPICAL SURFACE RESTORATION DETAILS.
2. FINAL BACKFILL:
   A. 85% TYPICAL
   B. 95% COMPACTION IN ROAD RIGHT-OF-WAY AND DRIVE WAYS.
   C. USE ASTM D 1557 MODIFIED PROCTOR FOR ROADWAYS.
   D. USE ASTM D 698 STANDARD PROCTOR FOR ALL OTHER AREAS.
   E. SUBSOIL TYPE S1, ONSITE BACKFILL TYPE A2, IMPORTED GRANULAR FILL TYPE A1.
   F. INSTALL MAGNETIC LOCATOR TAPE 12"-18" BELOW FINISHED SURFACE. CENTER TAPE IN TRENCH.
3. EMBEDMENT:
   A. ONSITE EMBEDMENT TYPE A4, IMPORTED EMBEDMENT TYPE A3. LIMIT PARTICLE SIZE TO 1".
   B. INITIAL BACKFILL:
      B.1. 90% COMPACTION
      B.2. FILL VOIDS BETWEEN PIPE AND TRENCH SIDES.
      B.3. USE HAND HELD OR WALK BEHIND COMPACTION EQUIPMENT TO PROTECT PIPE.
      B.4. LIFT THICKNESS: MAX. 8" UNCOMPACTED.
   C. HAUNCHING:
      C.1. 90% COMPACTION
      C.2. SHOVEL-SLICE AND MANUAL TAMP EMBEDMENT MATERIAL TO ASSURE ALL VOIDS BETWEEN THE PIPE AND THE TRENCH BOTTOM AND SIDES ARE FILLED.
      C.3. COMPACT MATERIAL TO PROVIDE COMPLETE CONTACT WITH PIPE BOTTOM.
   D. BEDDING:
      D.1. LEVEL EMBEDMENT MATERIAL TO PROVIDE CONTINUOUS FIRM SUPPORT ALONG FULL LENGTH OF PIPE. HIGH SPOTS SHOULD BE SHAVED OFF AND LOW SPOTS FILLED WITH WELL TAMPED SOIL. EXCAVATE A BELL HOLE, IF NECESSARY, TO ASSURE NO UNDUE WEIGHT IS PLACED ON BELL AND THAT THE PIPE BARREL IS SUPPORTED.
4. FOUNDATION:
   A. IMPORTED FOUNDATION TYPE A5.
   B. USE FOUNDATION MATERIAL AS REQUIRED TO PROVIDE STRUCTURAL SUPPORT FOR PIPE.

NOTES:

1. TRACER WIRE SHALL BE INSTALLED AT THE CROWN OF THE PIPE.
2. THE WIRE SHALL BE SECURED TO THE CROWN OF THE PIPE IN SUCH A MANNER THAT IT DOES NOT DAMAGE THE PIPE AND IT RETAINS THE WIRE IN PLACE THROUGH BACKFILLING. WIRE SECURED BY ROCKS IS NOT ACCEPTABLE.
3. WIRE THAT FALLS TO THE SIDE OF THE PIPE SHALL BE RE-SECURED TO THE CROWN OF THE PIPE PRIOR TO BACKFILLING.

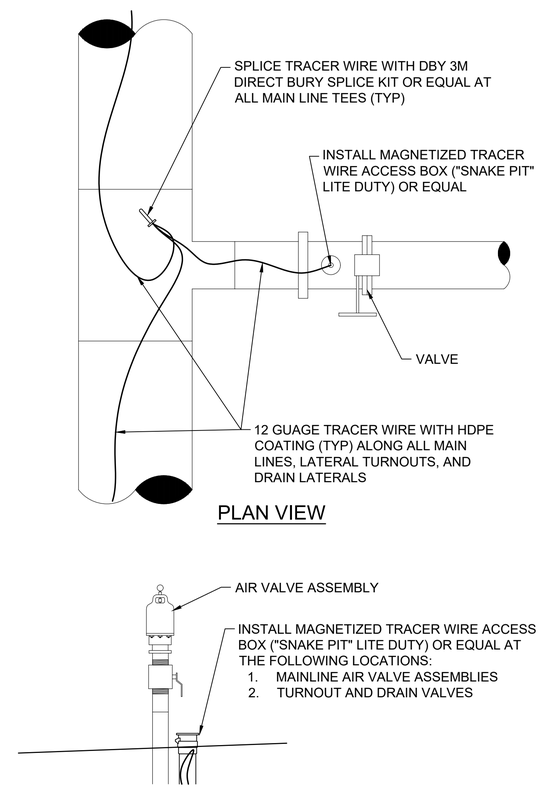

C3 TRACER WIRE INSTALLATION
SCALE:NOT TO SCALE

NOTES:

1. LOCATE PIPE MARKERS ALONG PIPELINE WITH MAX. SPACING OF 500 FEET, INCLUDING ALL FENCE CROSSINGS, ROAD CROSSINGS, AND AIR VENTS.

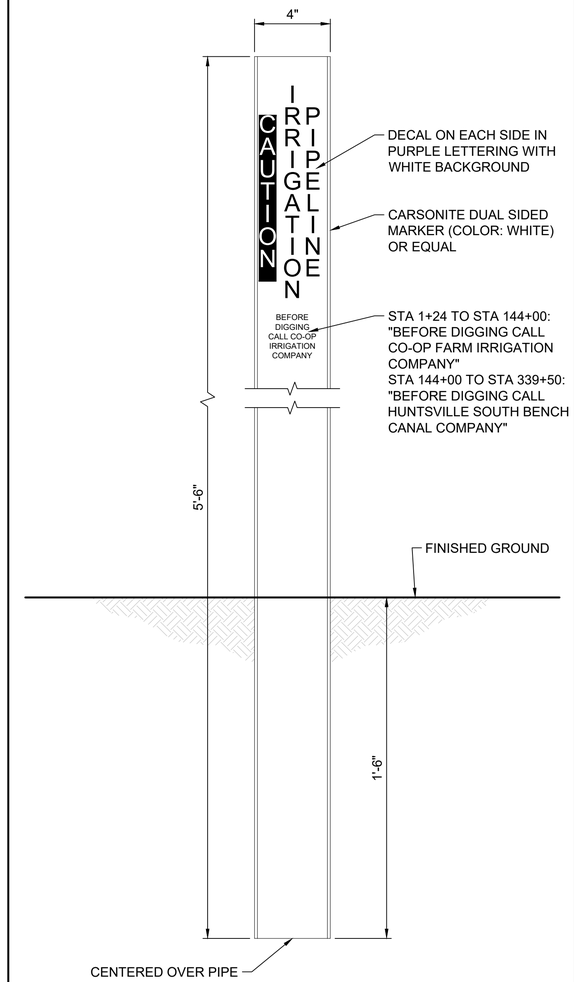

C4 PIPE MARKER INSTALLATION
SCALE:NOT TO SCALE

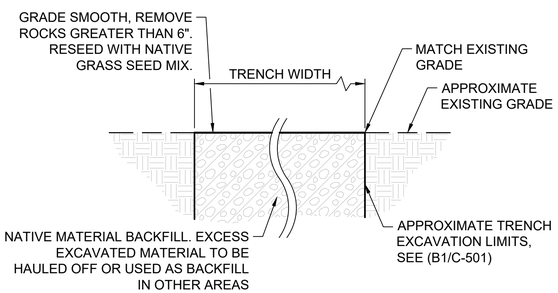

C1 NATIVE MATERIAL SURFACE RESTORATION
SCALE:NOT TO SCALE

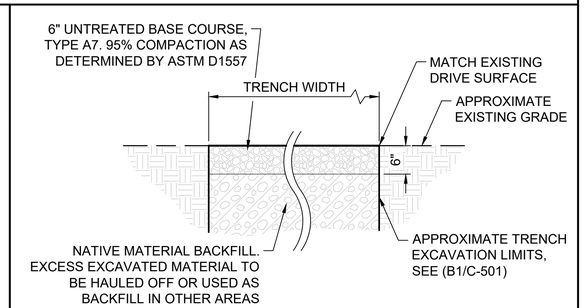

C2 DIRT DRIVEWAY SURFACE RESTORATION
SCALE:NOT TO SCALE

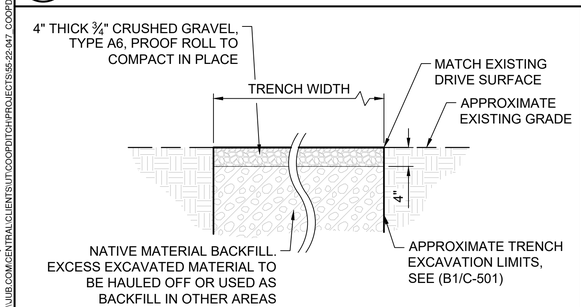

D1 GRAVEL DRIVEWAY SURFACE RESTORATION
SCALE:NOT TO SCALE

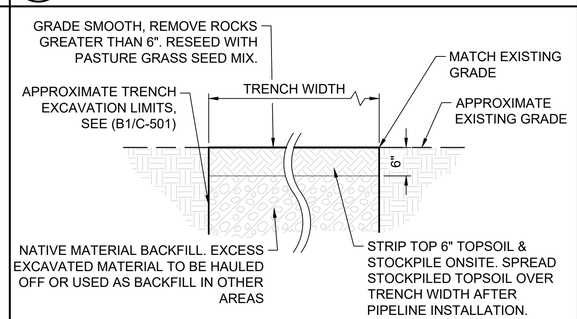

D2 CULTIVATED FIELD SURFACE RESTORATION
SCALE:NOT TO SCALE

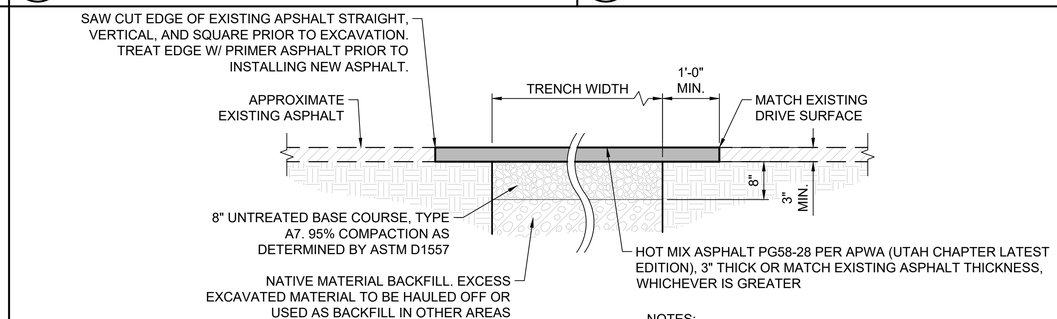

NOTES:

1. CONTRACTOR IS RESPONSIBLE TO COORDINATE WITH DRIVEWAY OWNER DURING CONSTRUCTION.
2. CONTRACTOR IS RESPONSIBLE TO MAINTAIN THE TRENCH UNTIL PERMANENT ASPHALT CAN BE PLACED.

D3 ASPHALT DRIVEWAY SURFACE RESTORATION
SCALE:NOT TO SCALE

J-U-B ENGINEERS, INC.

J-U-B ENGINEERS, INC.
466 North 900 West
Kaysville, UT 84037
Phone: 801.547.0393
www.jub.com

BID SET

REGISTERED PROFESSIONAL ENGINEER
97-186246-2202
BRIAN DEETER
07/10/25
STATE OF UTAH

REUSE OF DRAWINGS
J-U-B SHALL RETAIN ALL COMMON LAW, STATUTORY, COPYRIGHT AND OTHER RESERVED RIGHTS OF THESE DRAWINGS, AND THE SAME SHALL NOT BE REUSED WITHOUT J-U-B'S PRIOR WRITTEN CONSENT. ANY REUSE WITHOUT WRITTEN CONSENT BY J-U-B WILL BE AT CLIENT'S SOLE RISK AND WITHOUT LIABILITY OR LEGAL EXPOSURE TO J-U-B.

NO.	DESCRIPTION	BY	APR.	DATE
	REVISION			

CO-OP/HSBCC CANAL PRESSURIZATION PROJECT
CO-OP & HSBCC

TYPICAL PIPE DETAILS

FILE :	55-22-047_C-501X
JUB PROJ. # :	55-22-047
DRAWN BY:	JAS
DESIGN BY:	JSF
CHECKED BY:	JSF

ONE INCH
AT FULL SIZE, IF NOT ONE INCH, SCALE ACCORDINGLY

LAST UPDATED: 7/17/2025

SHEET NUMBER:
C-501

Plot Date:7/17/2025 11:14 AM Plotted By: Jon Frazier
Date Created:7/17/2025 \\JUB.COM\CENTRAL\CLIENTS\UT\COOPDITCH\PROJECTS\55-22-047_COOPDITCH2023\PIPING\PROJECT\DESIGN\CAD\SHEET\55-22-047_C-501X.DWG

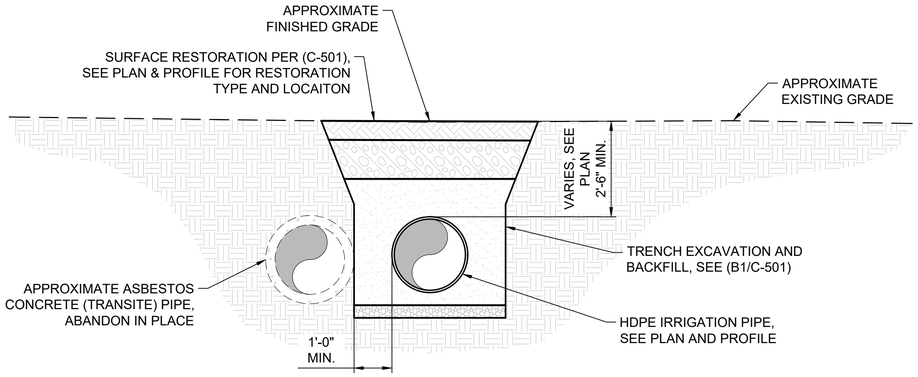

B1 TYPICAL PIPE SECTION - HDPE PIPE INSTALLED AT EXISTING TRANSITE PIPE
SCALE:NOT TO SCALE

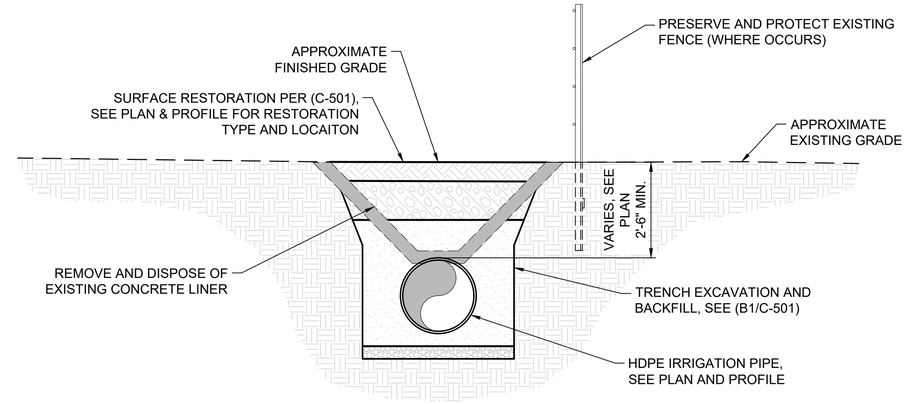

B3 TYPICAL PIPE SECTION - HDPE PIPE INSTALLED AT EXISTING CONCRETE LINER
SCALE:NOT TO SCALE

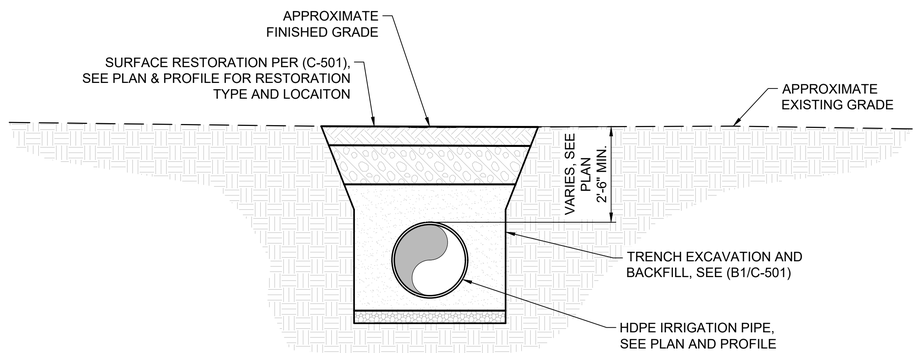

C1 TYPICAL PIPE SECTION - HDPE PIPE INSTALLED IN NEW ALIGNMENT
SCALE:NOT TO SCALE

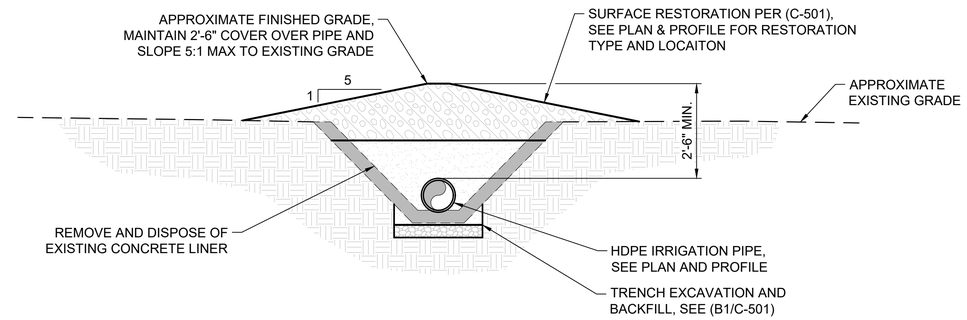

C3 TYPICAL PIPE SECTION - HDPE PIPE INSTALLED AT EXISTING CONCRETE LINER (SHALLOW)
SCALE:NOT TO SCALE

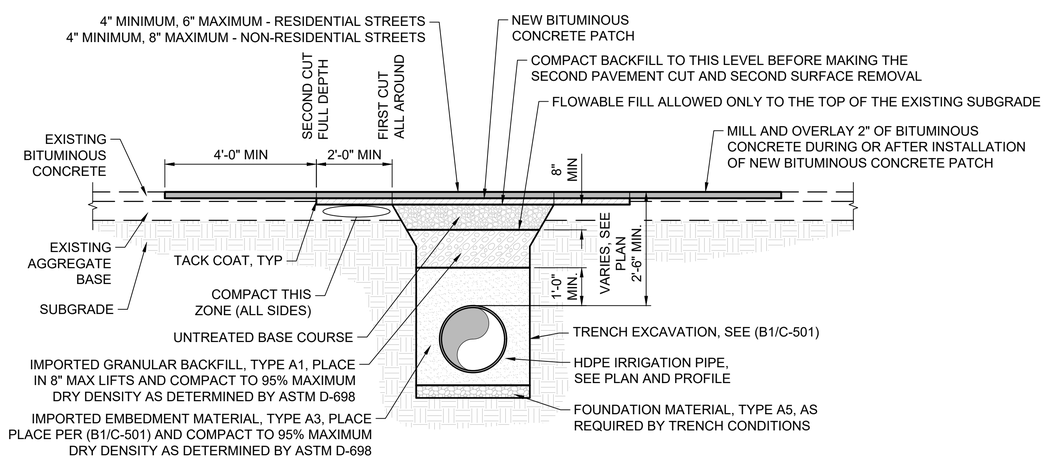

D1 TYPICAL PIPE SECTION - HDPE PIPE INSTALLED IN ROADWAY
SCALE:NOT TO SCALE

BITUMINOUS PAVEMENT T-PATCH

1. GENERAL
   - 1.1. CONTRACTOR IS RESPONSIBLE TO OBTAIN ALL NECESSARY PERMITS FROM THE RESPONSIBLE AGENCY FOR THE ROAD CROSSING.
   - 1.2. VERTICAL CUTS IN BITUMINOUS PAVEMENT MAY BE DONE BY SAW OR PAVEMENT ZIPPING. IF CUTS GREATER THAN 6-INCHES ARE NECESSARY TO PREVENT PAVEMENT "BREAK OFF" CONSULT ENGINEER FOR DIRECTIONS ON HANDLING ADDITIONAL COSTS.
2. PRODUCTS
   - 2.1. BASE COURSE: UNTREATED BASE COURSE, APWA SECTION 32 11 23. DO NOT USE GRAVEL AS BASE COURSE WITHOUT ENGINEER'S PERMISSION.
   - 2.2. FLOWABLE FILL: TARGET IS 60 PSI IN 28 DAYS WITH 90 PSI MAXIMUM IN 28 DAYS, APWA SECTION 31 05 15. IT MUST FLOW EASILY REQUIRING NO VIBRATION FOR CONSOLIDATION.
   - 2.3. TACK COAT: APWA SECTION 32 12 13.13.
   - 2.4. BITUMINOUS CONCRETE. APWA SECTION 32 12 05.
     - 2.4.1. WARM WEATHER PATCH: PG64-22-DM-1/2, UNLESS INDICATED OTHERWISE.
     - 2.4.2. COLD WEATHER PATCH: MODIFIED MC-250-FM-1 AS INDICATED IN APWA SECTION 33 05 25.
3. EXECUTION
   - 3.1. BASE COURSE PLACEMENT: APWA SECTION 32 05 10. MAXIMUM LIFT THICKNESS BEFORE COMPACTION IS 8-INCHES WHEN USING RIDING EQUIPMENT OR 6-INCHES WHEN USING HAND HELD EQUIPMENT. COMPACTION IS 95 PERCENT OR GREATER RELATIVE TO A MODIFIED PROCTOR DENSITY, APWA SECTION 31 23 26.
   - 3.2. FLOWABLE FILL: CURE TO INITIAL SET BEFORE PLACING AGGREGATE BASE OR BITUMINOUS PAVEMENT. USE IN EXCAVATIONS THAT ARE TOO NARROW TO RECEIVE COMPACTION EQUIPMENT.
   - 3.3. TACK COAT. CLEAN ALL HORIZONTAL AND VERTICAL SURFACES. APPLY FULL COVERAGE ALL SURFACES.
   - 3.4. PAVEMENT PLACEMENT: FOLLOW APWA SECTION 32 12 16.13. UNLESS INDICATED OTHERWISE, LIFT THICKNESS IS 3-INCHES MINIMUM AFTER COMPACTION. COMPACT TO 94 PERCENT OF ASTM D2041 (RICE DENSITY) PLUS OR MINUS 2 PERCENT.
   - 3.5. COMPACTION TESTING IS REQUIRED FOR EVERY LEVEL OF MATERIAL.

J-U-B ENGINEERS, INC.
J-U-B ENGINEERS, INC.
466 North 900 West
Kaysville, UT 84037
Phone: 801.547.0393
www.jub.com

BID SET

REGISTERED PROFESSIONAL ENGINEER
97-186246-2202
BRIAN DEETER
07/10/25
STATE OF UTAH

REUSE OF DRAWINGS
J-U-B SHALL RETAIN ALL OWNERSHIP, POSSESSORY, COPYRIGHT AND OTHER RESERVED RIGHTS OF THESE DRAWINGS, AND THE SAME SHALL NOT BE REUSED WITHOUT J-U-B'S PRIOR WRITTEN CONSENT. ANY REUSE WITHOUT WRITTEN CONSENT BY J-U-B WILL BE AT CLIENTS SOLE RISK AND WITHOUT LIABILITY OR LEGAL EXPOSURE TO J-U-B.

NO.	DESCRIPTION	BY	APR.	DATE
	REVISION			

CO-OP/HSBCC CANAL PRESSURIZATION PROJECT
CO-OP & HSBCC

TYPICAL PIPE SECTIONS

FILE : 55-22-047 C-501X
JUB PROJ. # :55-22-047
DRAWN BY: JAS
DESIGN BY: JSF
CHECKED BY: JSF
ONE INCH
AT FULL SIZE, IF NOT ONE INCH, SCALE ACCORDINGLY
LAST UPDATED: 7/17/2025

SHEET NUMBER:
C-502

Plot Date:7/17/2025 11:15 AM Plotted By: Jon Frazier
Date Created:7/17/2025 \\JUB.COM\CENTRAL\CLIENTS\UT\COOPDITCH\PROJECTS\55-22-047_COOPDITCH2023\PIPING\PROJECT\DESIGN\CAD\SHEETS\55-22-047_C-501X.DWG

NOTES:
1. WATERMAN CR-101 OR FRESNO SERIES 3500 CONTINUOUS ACTING AIR VENT AND VACUUM RELIEF VALVE, OR EQUAL, FOR 2", 3", & 4" VALVE ASSEMBLIES UP TO 100 PSI.

AIR VALVE ASSEMBLY TABLE

PHASE	AIR VALVE ASSEMBLIES			BRANCH SADDLE	BALL VALVE			48" ADS BARREL	COMBINATION VALVE			VALVE TYPE (SEE NOTES)	DETAILS	NOTES
	STATION	NUMBER	DESCRIPTION		2"	3"	4"		2"	3"	4"			
CO-OP FARM IRRIGATION COMPANY	STA 1+93	CO-OP-01	COMBINATION AIR VALVE ASSEMBLY	24"x4"			1	1			1	1	(D3/C-503)	
	STA 13+35	CO-OP-02	COMBINATION AIR VALVE ASSEMBLY	24"x4"			1				1	1	(D1/C-503)	INSTALL AT PIPE GRADE BREAK NEXT TO FENCE LINE
	STA 30+15	CO-OP-03	COMBINATION AIR VALVE ASSEMBLY	24"x4"			1				1	1	(D1/C-503)	INSTALL AT PIPE GRADE BREAK NEXT TO FENCE LINE
	STA 43+88	CO-OP-04	COMBINATION AIR VALVE ASSEMBLY	24"x4"			1				1	1	(D1/C-503)	INSTALL NEXT TO FENCE
	STA 59+24	CO-OP-05	COMBINATION AIR VALVE ASSEMBLY	24"x4"			1				1	1	(D1/C-503)	INSTALL NEXT TO FENCE
	STA 73+63	CO-OP-06	COMBINATION AIR VALVE ASSEMBLY	20"x3"		1				1		1	(D1/C-503)	INSTALL NEXT TO FENCE
	STA 85+82	CO-OP-07	COMBINATION AIR VALVE ASSEMBLY	20"x3"		1				1		1	(D2/C-503)	INSTALL NEXT TO FENCE
	STA 98+32	CO-OP-08	COMBINATION AIR VALVE ASSEMBLY	20"x3"		1				1		1	(D2/C-503)	INSTALL NEXT TO FENCE
	STA 110+85	CO-OP-09	COMBINATION AIR VALVE ASSEMBLY	20"x3"		1				1		1	(D2/C-503)	INSTALL NEXT TO FENCE
	STA 123+36	CO-OP-10	COMBINATION AIR VALVE ASSEMBLY	20"x3"		1				1		1	(D2/C-503)	INSTALL NEXT TO FENCE
	STA 135+82	CO-OP-11	COMBINATION AIR VALVE ASSEMBLY	20"x3"		1				1		1	(D2/C-503)	INSTALL NEXT TO FENCE
HUNTSVILLE SOUTH BENCH CANAL COMPANY	STA 144+06	HSBCC-01	COMBINATION AIR VALVE ASSEMBLY	20"x2"	1				1			1	(D2/C-503)	INSTALL AT HIGH POINT IN PIPE
	STA 150+49	HSBCC-02	COMBINATION AIR VALVE ASSEMBLY	20"x2"	1			1	1			1	(D3/C-503) & (B1/C-510)	INSTALL AT HIGH POINT IN PIPE
	STA 163+92	HSBCC-03	COMBINATION AIR VALVE ASSEMBLY	20"x2"	1			1	1			1	(D3/C-503)	INSTALL NEXT TO FENCE
	STA 175+91	HSBCC-04	COMBINATION AIR VALVE ASSEMBLY	20"x2"	1			1	1			1	(D3/C-503)	
	STA 187+90	HSBCC-05	COMBINATION AIR VALVE ASSEMBLY	(2) 20"x2"	2				2			1	(D4/C-509)	INSTALL ONE AIR VALVE ASSEMBLY UPSTREAM & DOWNSTREAM OF VALVE
	STA 198+49	HSBCC-06	COMBINATION AIR VALVE ASSEMBLY	20"x2"	1			1	1			1	(D3/C-503)	
	STA 209+48	HSBCC-07	COMBINATION AIR VALVE ASSEMBLY	20"x2"	1			1	1			1	(D3/C-503)	
	STA 222+92	HSBCC-08	COMBINATION AIR VALVE ASSEMBLY	20"x2"	1			1	1			1	(D3/C-503)	INSTALL NEXT TO FENCE
	STA 241+67	HSBCC-09	COMBINATION AIR VALVE ASSEMBLY	(2) 20"x2"	2				2			1	(D4/C-509)	INSTALL ONE AIR VALVE ASSEMBLY UPSTREAM & DOWNSTREAM OF VALVE
	STA 255+84	HSBCC-10	COMBINATION AIR VALVE ASSEMBLY	20"x2"	1			1	1			1	(D3/C-503)	
	STA 273+91	HSBCC-11	COMBINATION AIR VALVE ASSEMBLY	20"x2"	1			1	1			1	(D3/C-503) & (B3/C-510)	
	STA 276+42	HSBCC-12	COMBINATION AIR VALVE ASSEMBLY	(2) 20"x2"	2				2			1	(D4/C-509) & (D1/C-510)	INSTALL ONE AIR VALVE ASSEMBLY UPSTREAM & DOWNSTREAM OF VALVE
	STA 293+67	HSBCC-13	COMBINATION AIR VALVE ASSEMBLY	20"x2"	1			1	1			1	(D3/C-503)	
	STA 302+82	HSBCC-14	COMBINATION AIR VALVE ASSEMBLY	20"x2"	1			1	1			1	(D3/C-503)	INSTALL AT HIGH POINT ON EXISTING PIPELINE
	STA 320+99	HSBCC-15	COMBINATION AIR VALVE ASSEMBLY	(2) 20"x2"	2				2			1	(D4/C-509) & (B1/C-511)	INSTALL ONE AIR VALVE ASSEMBLY UPSTREAM & DOWNSTREAM OF VALVE
	STA 323+06	HSBCC-16	COMBINATION AIR VALVE ASSEMBLY	20"x2"	1			1	1			1	(D3/C-503)	INSTALL AT HIGH POINT IN PIPE
	STA 326+86	HSBCC-17	COMBINATION AIR VALVE ASSEMBLY	20"x2"	1			1	1			1	(D3/C-503)	INSTALL AT HIGH POINT IN PIPE

B1 MAIN LINE AIR VALVE ASSEMBLY TABLE
SCALE: 1"=1'-0"

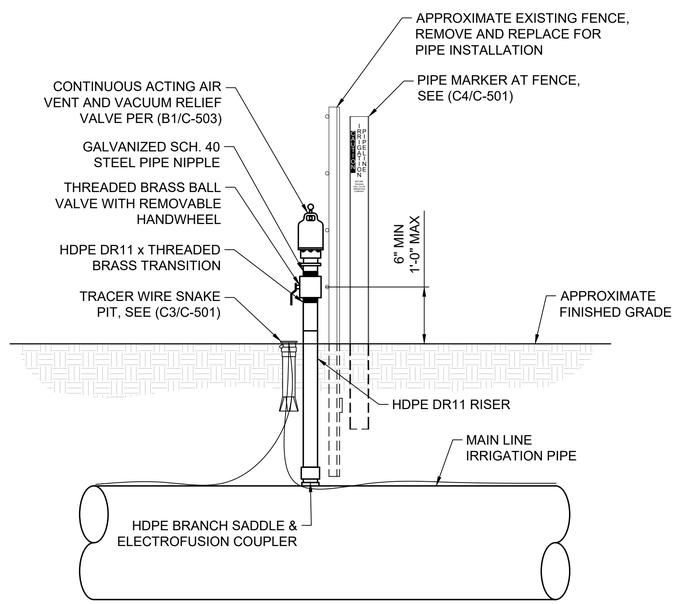

NOTES:
1. LEAVE BALL VALVE IN OPEN POSITION AFTER INSTALLATION.
2. RISER SHALL BE INSTALLED PLUMB.
3. TRACER WIRE AND SNAKE PIT ARE NOT REQUIRED AT HSBCC AIR VALVE ASSEMBLIES.

D1 MAIN LINE AIR VENT AT PERPENDICULAR FENCE CROSSING
SCALE: 3/4"=1'-0"

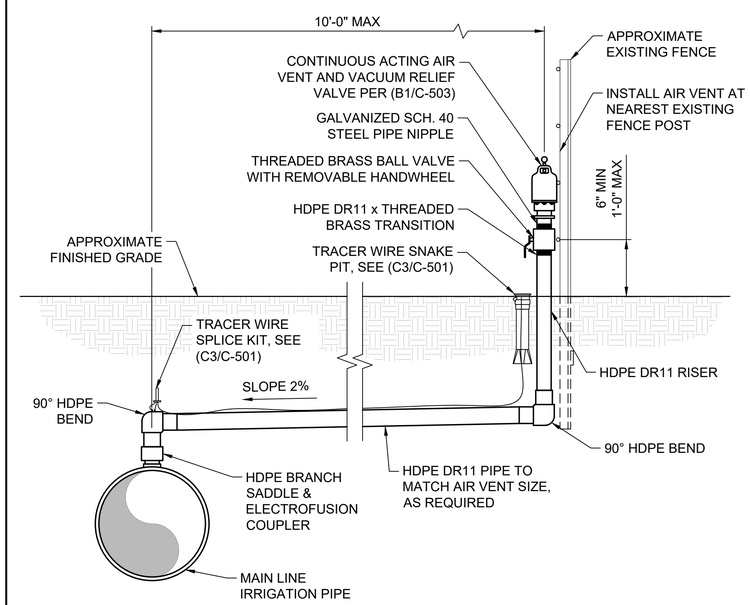

NOTES:
1. LEAVE BALL VALVE IN OPEN POSITION AFTER INSTALLATION.
2. RISER SHALL BE INSTALLED PLUMB.
3. TRACER WIRE AND SNAKE PIT ARE NOT REQUIRED AT HSBCC AIR VALVE ASSEMBLIES.

D2 MAIN LINE AIR VENT PARALLEL TO EXISTING FENCE
SCALE: 3/4"=1'-0"

NOTES:
1. LEAVE BALL VALVE IN OPEN POSITION AFTER INSTALLATION.
2. RISER SHALL BE INSTALLED PLUMB.
3. TRACER WIRE AND SNAKE PIT ARE NOT REQUIRED AT HSBCC AIR VALVE ASSEMBLIES.

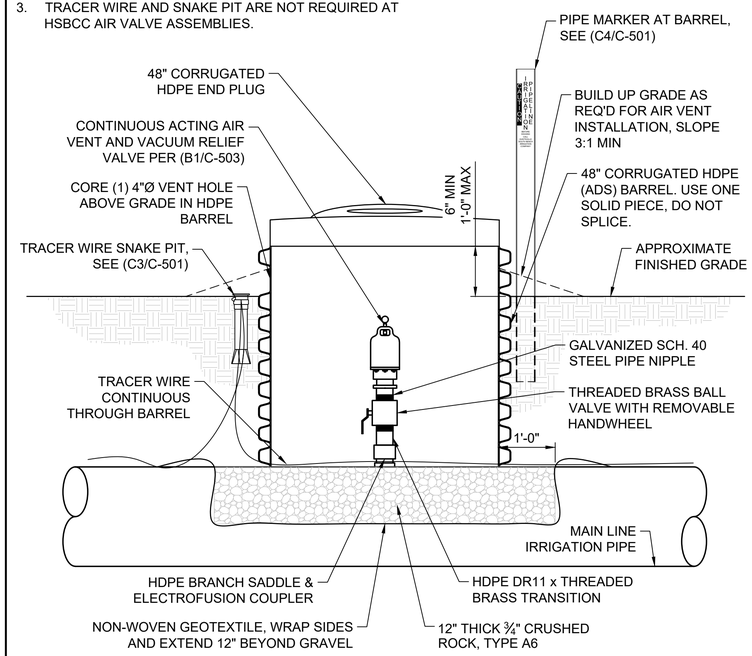

D3 MAIN LINE AIR VENT - BURIED CONDITION
SCALE: 3/4"=1'-0"

J-U-B ENGINEERS, INC.
J-U-B ENGINEERS, INC.
466 North 900 West
Kaysville, UT 84037
Phone: 801.547.0393
www.jub.com

BID SET

REGISTERED PROFESSIONAL ENGINEER 97-186246-2202 BRIAN DEETER 07/10/25 STATE OF UTAH

REUSE OF DRAWINGS
J-U-B SHALL RETAIN ALL OWNERSHIP, STATUTORY, COPYRIGHT AND OTHER RESERVED RIGHTS OF THESE DRAWINGS, AND THE SAME SHALL NOT BE REUSED WITHOUT J-U-B'S PRIOR WRITTEN CONSENT. ANY REUSE WITHOUT WRITTEN CONSENT BY J-U-B WILL BE AT CLIENT'S SOLE RISK AND WITHOUT LIABILITY OR LEGAL EXPOSURE TO J-U-B.

NO.	DESCRIPTION	BY	APR.	DATE

REVISION

CO-OP/HSBCC CANAL PRESSURIZATION PROJECT
CO-OP & HSBCC

AIR VALVE ASSEMBLY DETAILS

FILE: 55-22-047 C-501X
JUB PROJ. #: 55-22-047
DRAWN BY: JAS
DESIGN BY: JSF
CHECKED BY: JSF
ONE INCH
AT FULL SIZE, IF NOT ONE INCH, SCALE ACCORDINGLY
LAST UPDATED: 7/17/2025

SHEET NUMBER:
C-503

Plot Date:7/17/2025 11:16 AM, Plotted By:- Jon Frazier
Date Created:7/17/2025 \\JUB.COM\CENTRAL\CLIENTS\UT\COOPDITCH\PROJECTS\55-22-047_COOPDITCH2023\PIPING\PROJECT\DESIGN\CAD\SHEET\55-22-047_C-501X.DWG

THRUST BLOCK DIMENSIONS

PIPE SIZE	W^H	W^V	W^T	"H" BARS		"V" BARS		"D" BARS		NUMBER OF FLEX RESTRAINTS
				SIZE	NO.	SIZE	NO.	SIZE	NO.	
24" DR41	1.5	1.5	1.25	#4	2	#4	2	#4	4	4
20" DR32.5	1.33	1.33	1.25	#4	2	#4	2	#4	4	3
16" DR32.5 TO 10" DR21	1	1	1.167	#4	2	#4	2	#4	4	2
8" DR17 OR SMALLER	0.75	0.75	1	#4	1	#4	1	#4	4	2

NOTES:
1. ELECTROFUSION FLEX RESTRAINTS MAYBE USED IN PLACE OF HDPE WALL ANCHOR. SEE TABLE FOR NUMBER OF FLEX RESTRAINTS REQUIRED FOR EACH PIPE SIZE.
2. A CIRCULAR HOOP TIE AT EACH FACE MAY BE USED IN PLACE OF THE "D" BARS SHOWN IN THE TABLE. THE HOOP TIE SHOULD MATCH THE "D" BAR SIZE SHOWN IN THE TABLE.
3. STRUCTURAL CONCRETE: fc = 4,000 PSI, ABSOLUTE WATER-CEMENT RATIO BY WEIGHT = 0.50, AIR CONTENT = 6% (±1.5%).
4. REINFORCING STEEL SHALL CONFORM TO ASTM A615 GRADE 60.
5. UNLESS NOTED ELSEWHERE ON DRAWINGS, ALL REINFORCING STEEL SHALL HAVE THE FOLLOWING CONCRETE COVER:
   5.1. CONCRETE CAST AGAINST EARTH: 3.00 INCH
   5.2. CONCRETE EXPOSED TO EARTH, LIQUID, OR WATER: 1.50 INCH FORMED SURFACES

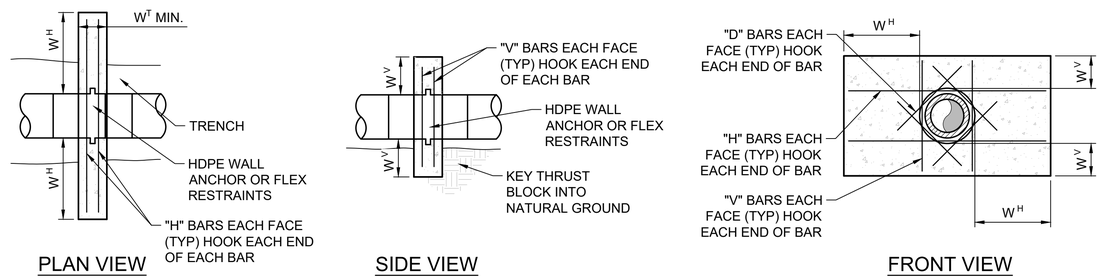

B1 HDPE THRUST RESTRAINT DETAIL
SCALE:3/8"=1'-0"

PIPE SIZE	OUTSIDE DIAMETER	WALL THICKNESS	TRANSDUCER TYPE	TRANSDUCER CONFIGURATION	TRANSDUCER SPACING
24" HDPE DR41	48"	0.655"	050LX 500KHZ	V	19.22"
20" HDPE DR32.5	20"	0.615"	050LX 500KHZ	V	16.05"

NOTES:
1. FLOW METERS AND TRANSDUCERS SHALL BE SPIRAX SARCO UTM20 SERIES ULTRASONIC TRANSIT-TIME FLOW METERS. CONTACT STEVE COMBE WITH FRONTIER PRECISION, scombe@frontierprecision.com, (801) 791-3407
2. TRANSDUCERS SHALL BE SUBMERSIBLE NEMA6P.
3. INSTALL FLOW METER AND TRANSDUCERS PER MANUFACTURER'S RECOMMENDATIONS.

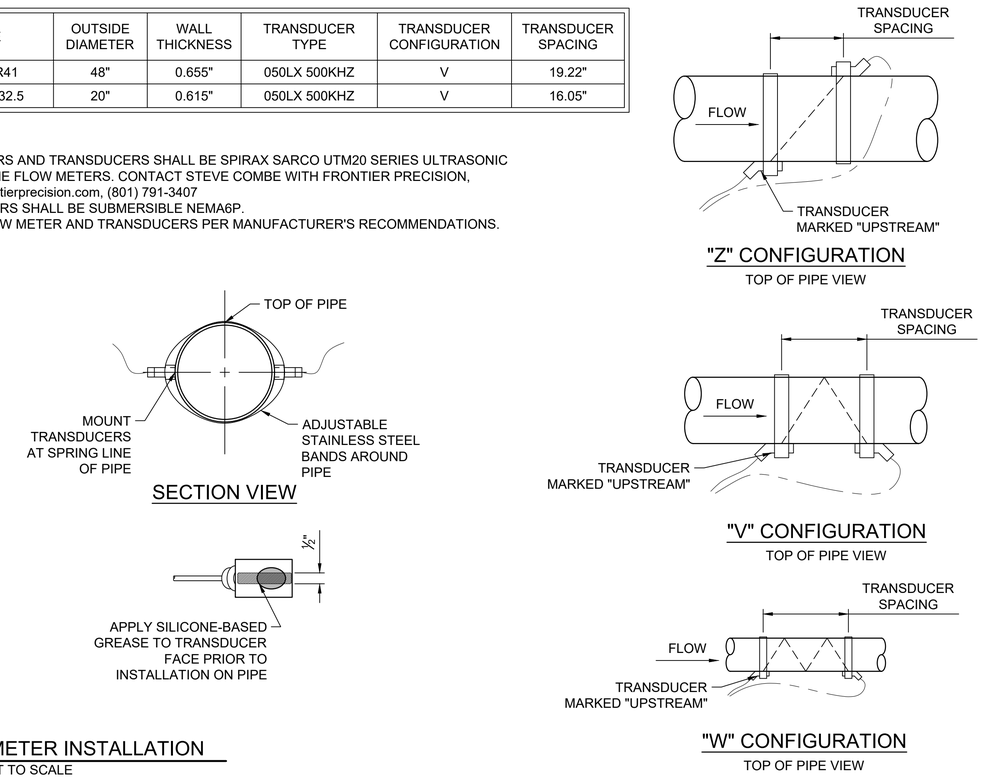

B3 FLOW METER INSTALLATION
SCALE:NOT TO SCALE

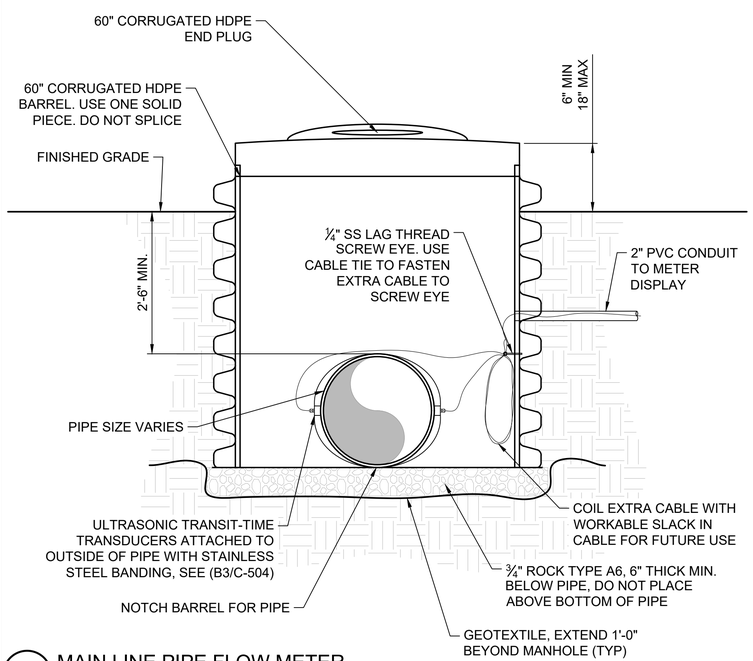

D1 MAIN LINE PIPE FLOW METER
SCALE:3/4"=1'-0"

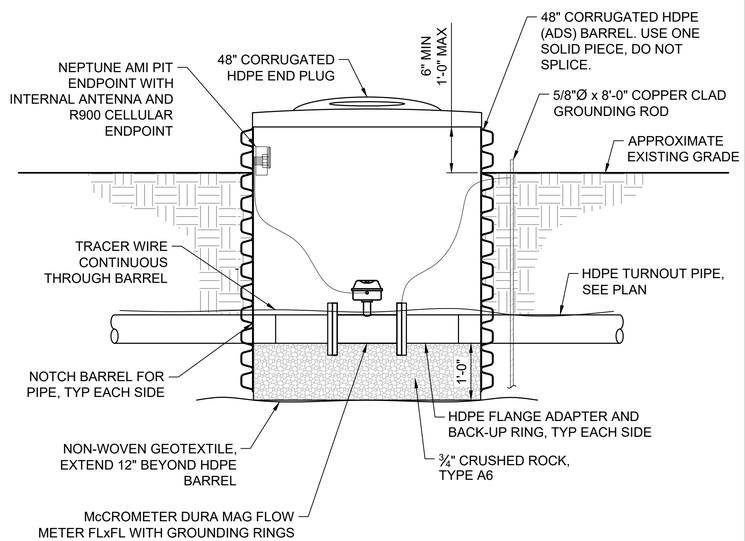

D2 4" TO 12" TURNOUT FLOW METER
SCALE:3/4"=1'-0"

NOTES:
1. CO-OP FLOW METER, STA 2+02.70, SHALL BE AC POWERED. SOLAR PANEL IS NOT REQUIRED AT THIS SITE.
2. HSBCC FLOW METER, STA 143+01.57, SHALL BE DC BATTERY-POWERED. SOLAR PANEL IS REQUIRED AT THIS SITE.
3. ENCLOSURE SHALL BE 18"x25"x15" MIN. ALUMINUM ENCLOSURE WITH BACK PANEL, POLE MOUNT BRACKET, CABLE ENTRY CONDUIT, AND LOCKABLE CLOSURE CLASP.
4. THE FOLLOWING ITEMS SHALL BE SUPPLIED AT BATTERY POWERED SITES:
   4.1. 12VDC CHARGE REGULATOR/CONTROLLER.
   4.2. 12VDC DEEP CYCLE MARINE BATTERY.

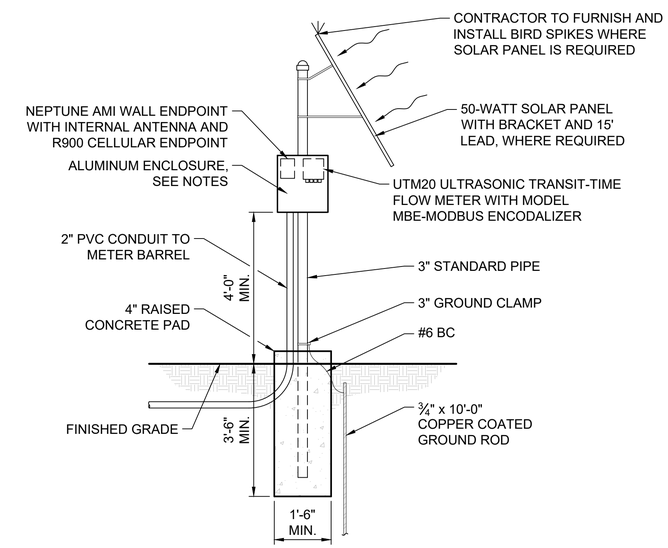

D3 MAIN LINE METER DISPLAY DETAIL
SCALE:1/2"=1'-0"

J-U-B ENGINEERS, INC.
J-U-B ENGINEERS, INC.
466 North 900 West
Kaysville, UT 84037
Phone: 801.547.0393
www.jub.com

BID SET

REGISTERED PROFESSIONAL ENGINEER 97-186246-2202 BRIAN DEETER 07/10/25 STATE OF UTAH

REUSE OF DRAWINGS
J-U-B SHALL RETAIN ALL COMMON LAW, STATUTORY, COPYRIGHT AND OTHER RESERVED RIGHTS OF THESE DRAWINGS, AND THE SAME SHALL NOT BE REUSED WITHOUT J-U-B'S PRIOR WRITTEN CONSENT. ANY REUSE WITHOUT WRITTEN CONSENT BY J-U-B WILL BE AT CLIENT'S SOLE RISK AND WITHOUT LIABILITY OR LEGAL EXPOSURE TO J-U-B.

NO.	DESCRIPTION	BY	APR.	DATE
	REVISION			

CO-OP/HSBCC CANAL PRESSURIZATION PROJECT
CO-OP & HSBCC

METER DETAILS

FILE : 55-22-047_C-501X
JUB PROJ. # :55-22-047
DRAWN BY: JAS
DESIGN BY: JSF
CHECKED BY: JSF
ONE INCH
AT FULL SIZE, IF NOT ONE INCH, SCALE ACCORDINGLY
LAST UPDATED: 7/17/2025

SHEET NUMBER:
C-504

Plot Date:7/17/2025 11:17 AM Plotted By: Jon Frazier
Date Created:7/17/2025 \\JUB.COM\CENTRAL\CLIENTS\UT\COOPDITCH\PROJECTS\55-22-047_COOPDITCH2023\PIPING\PROJECT\DESIGN\CAD\SHEET\55-22-047_C-501X.DWG

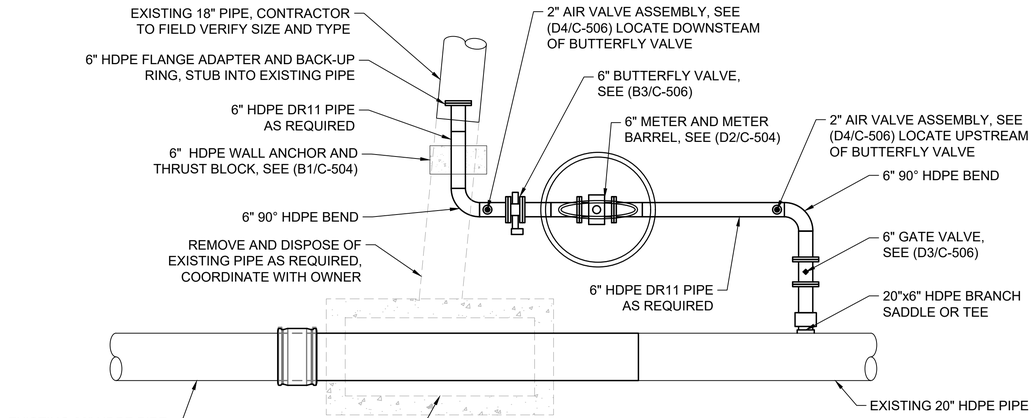

NOTES:
1. 2" SERVICES NOT SHOW FOR CLARITY.
2. ADJUST CONNECTION OF HSBCC LATERAL-03 TO FIELD FIT WITH EXISTING PIPE, COORDINATE LOCATION WITH OWNER AND ENGINEER.
3. SEE (C1/C-505) FOR HSBCC LATERAL-03 SECTION VIEW.

B1 HSBCC LATERAL-03 PLAN VIEW
SCALE:NOT TO SCALE

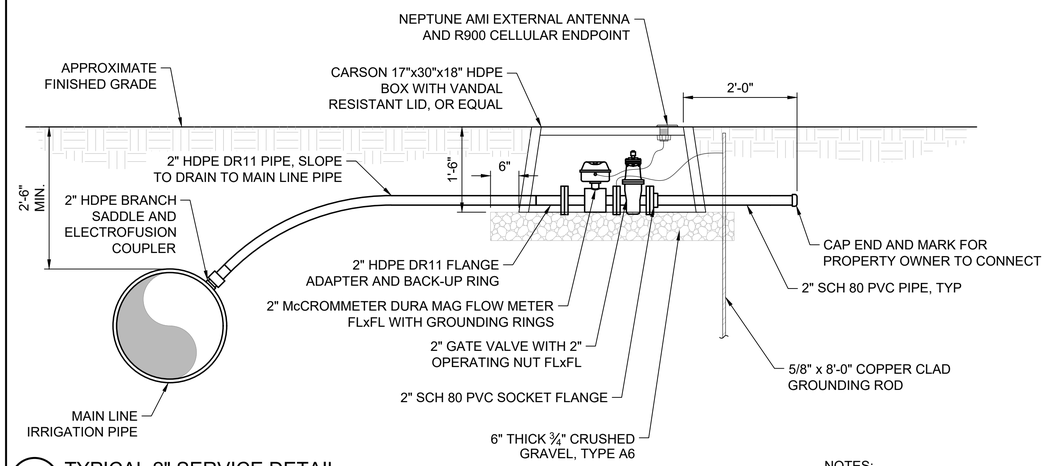

NOTES:
1. GATE VALVE SHALL MEET AWWA C515.

B3 TYPICAL 2" SERVICE DETAIL
SCALE:3/4"=1'-0"

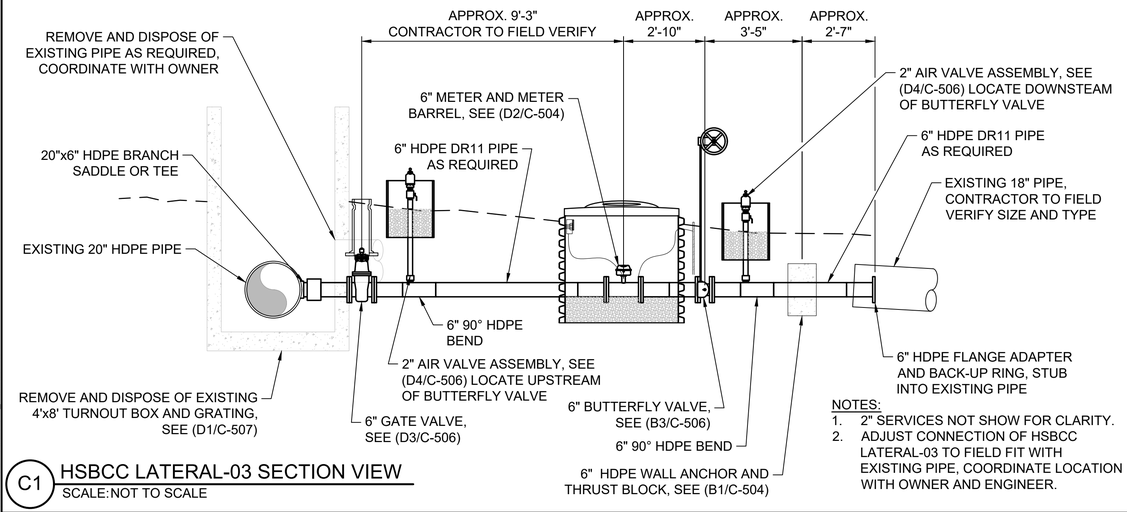

NOTES:
1. 2" SERVICES NOT SHOW FOR CLARITY.
2. ADJUST CONNECTION OF HSBCC LATERAL-03 TO FIELD FIT WITH EXISTING PIPE, COORDINATE LOCATION WITH OWNER AND ENGINEER.

C1 HSBCC LATERAL-03 SECTION VIEW
SCALE:NOT TO SCALE

NOTE:
1. PROVIDE DOCUMENTATION OF COMPACTION FROM A UDOT-QUALIFIED LABORATORY.

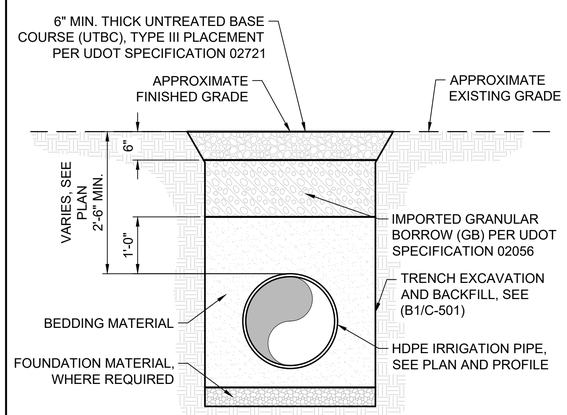

C3 UDOT RESTORATION < 6FT OF ASPHALT
SCALE:NOT TO SCALE

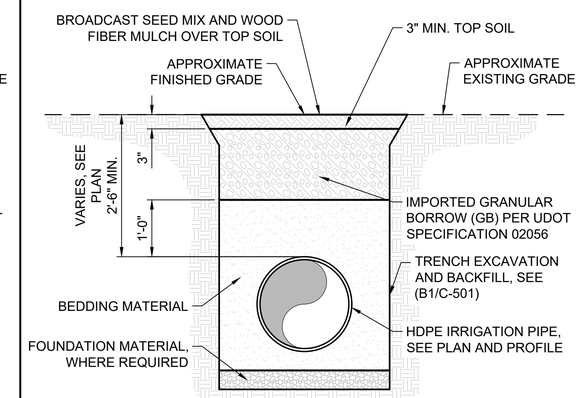

C4 UDOT RESTORATION > 6FT FROM ASPHALT
SCALE:NOT TO SCALE

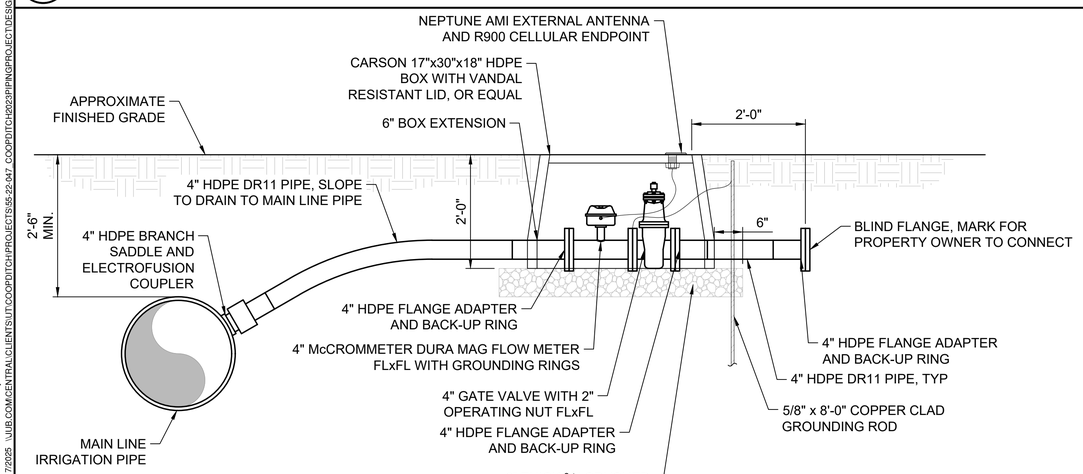

NOTES:
1. GATE VALVE SHALL MEET AWWA C515.

D1 TYPICAL 4" SERVICE DETAIL
SCALE:3/4"=1'-0"

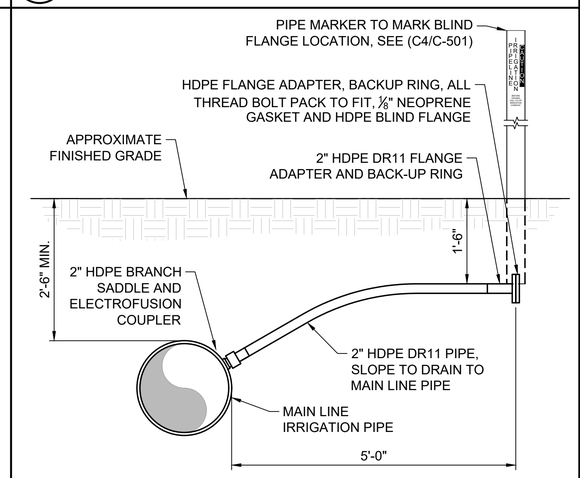

D3 2" BLIND FLANGE TURNOUT
SCALE:3/4"=1'-0"

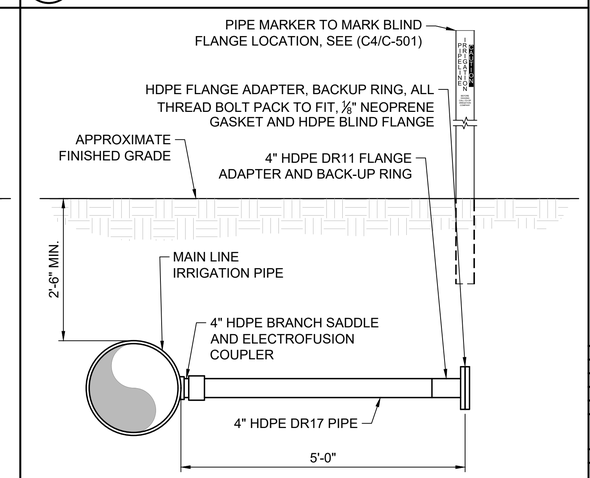

D4 4" BLIND FLANGE TURNOUT
SCALE:3/4"=1'-0"

J-U-B ENGINEERS, INC.
J-U-B ENGINEERS, INC.
466 North 900 West
Kaysville, UT 84037
Phone: 801.547.0393
www.jub.com

BID SET

REGISTERED PROFESSIONAL ENGINEER 97-186246-2202 BRIAN DEETER 07/10/25 STATE OF UTAH

REUSE OF DRAWINGS
J-U-B SHALL RETAIN ALL COMMON LAW, STATUTORY, COPYRIGHT AND OTHER RESERVED RIGHTS OF THESE DRAWINGS, AND THE SAME SHALL NOT BE REUSED WITHOUT J-U-B'S PRIOR WRITTEN CONSENT. ANY REUSE WITHOUT WRITTEN CONSENT BY J-U-B WILL BE AT CLIENTS SOLE RISK AND WITHOUT LIABILITY OR LEGAL EXPOSURE TO J-U-B.

NO.	DESCRIPTION	BY	APR.	DATE
	REVISION			

CO-OP/HSBCC CANAL PRESSURIZATION PROJECT
CO-OP & HSBCC

TURNOUT DETAILS

FILE : 55-22-047 C-501X
JUB PROJ. # : 55-22-047
DRAWN BY: JAS
DESIGN BY: JSF
CHECKED BY: JSF
ONE INCH
AT FULL SIZE, IF NOT ONE INCH, SCALE ACCORDINGLY
LAST UPDATED: 7/17/2025

SHEET NUMBER:
C-505

Plot Date:7/21/2025 10:03 AM Plotted By: Jon Frazier
Date Created:7/17/2025 \\JUB.COM\CENTRAL\CLIENTS\UT\COOPDITCH\PROJECTS\55-22-047_COOPDITCH2023\PIPNG\PROJECT\DESIGN\CAD\SHEET\55-22-047_C-501X.DWG

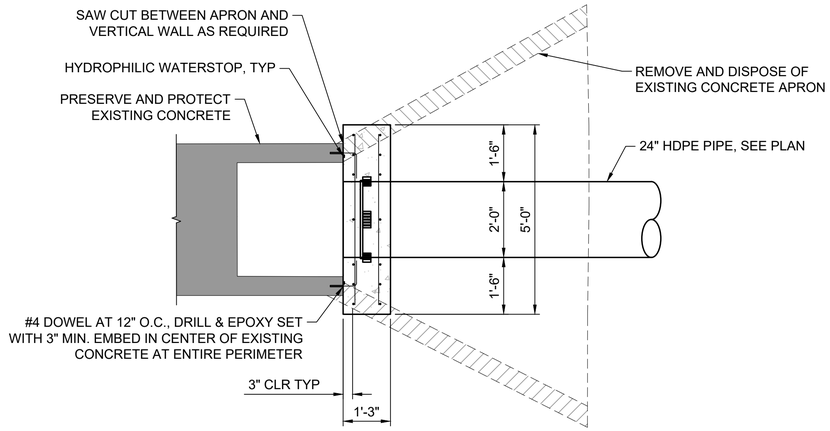

PLAN VIEW

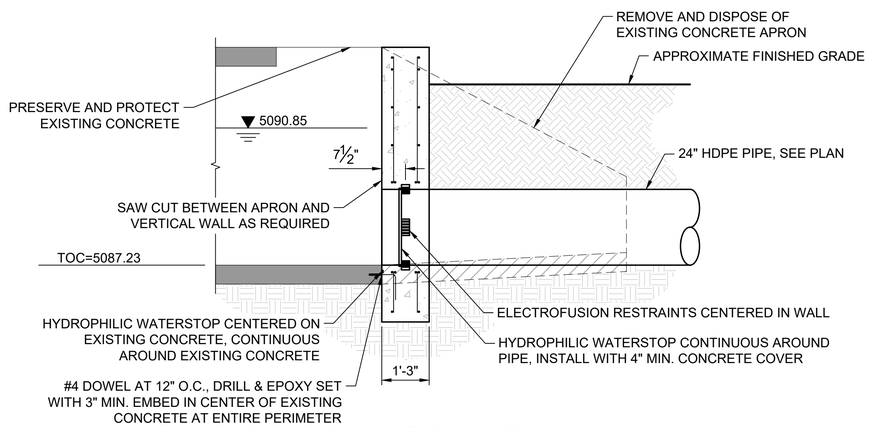

SECTION VIEW

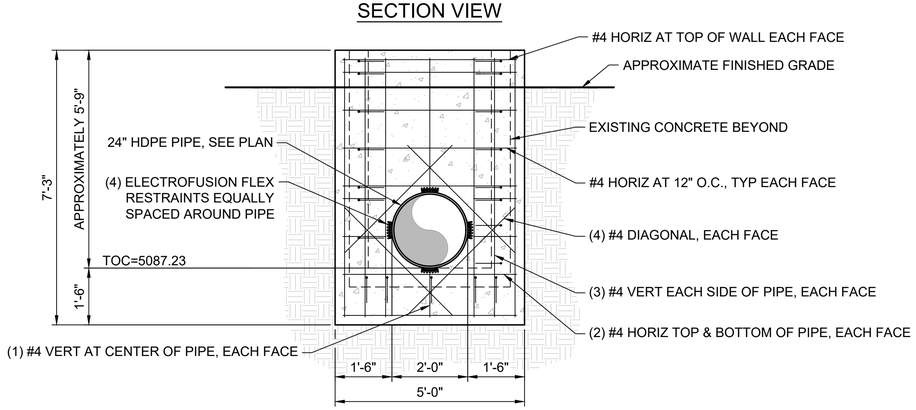

ELEVATION VIEW

NOTES:
1. CONCRETE: f'c=4,500psi AT 28-DAY STRENGTH, ABSOLUTE WATER-CEMENT RATIO BY WEIGHT = 0.45, AIR CONTENT = 6% (±1.5%).
2. REINFORCING STEEL: REINFORCING STEEL SHALL CONFORM TO ASTM A615, GRADE 60.
3. EPOXY SET REBAR: REINFORCING STEEL SHALL BE SET IN PLACE UTILIZING THE HIT-RE 500 V3 HIGH STRENGTH EPOXY SYSTEM; SIZE AND EMBEDMENT AS NOTED ON THE DRAWINGS, INSTALLED PER THE MANUFACTURE'S RECOMMENDATIONS; OR AN APPROVED EQUAL.
4. HYDROPHILIC WATERSTOP: HYDROPHILIC WATERSTOP SHALL BE SIKA HYDROTITE MODEL CJ-1020-2K WITH SIKA LEAKMAST LV-Z ADHESIVE AND SEALANT, INSTALLED PER MANUFACTURER'S RECOMMENDATIONS; OR AN APPROVED EQUAL.

D1 HDPE TO EXISTING DIVERSION STRUCTURE
SCALE: 1/2"=1'-0"

NOTES:
1. INSTALL STEM EXTENSION PLUMB.
2. VERIFY OPERATION OF VALVE AFTER FINAL BACKFILL.
3. LEAVE BUTTERFLY VALVE IN CLOSED POSITION AFTER INSTALLATION.
4. WRAP FLANGES AND GREASED BOLTS IN POLYWRAP.

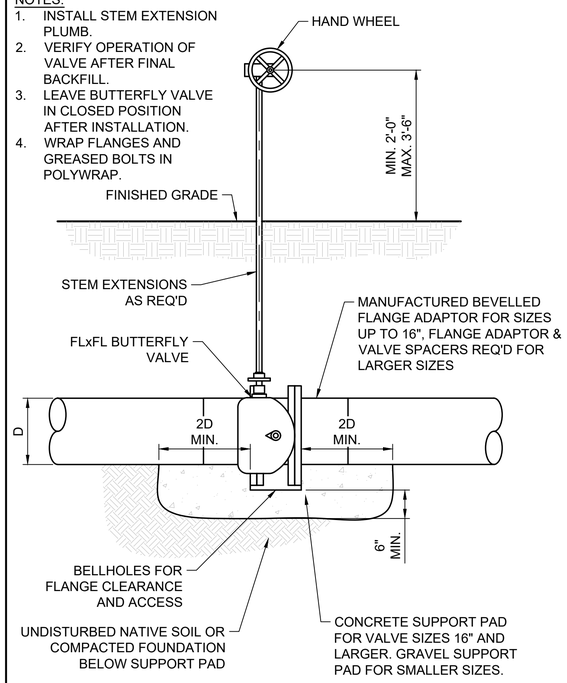

B3 BUTTERFLY VALVE ASSEMBLY WITH HAND WHEEL
SCALE: NOT TO SCALE

NOTES:
1. INSTALL VALVE BOX PLUMB WITH VALVE.
2. PROTECT VALVE BOX POSITION DURING BACKFILLING.
3. VERIFY OPERATION OF VALVE AFTER FINAL BACKFILL.
4. LEAVE BUTTERFLY VALVE IN OPEN POSITION AFTER INSTALLATION.
5. WRAP FLANGES AND GREASED BOLTS IN POLYWRAP.

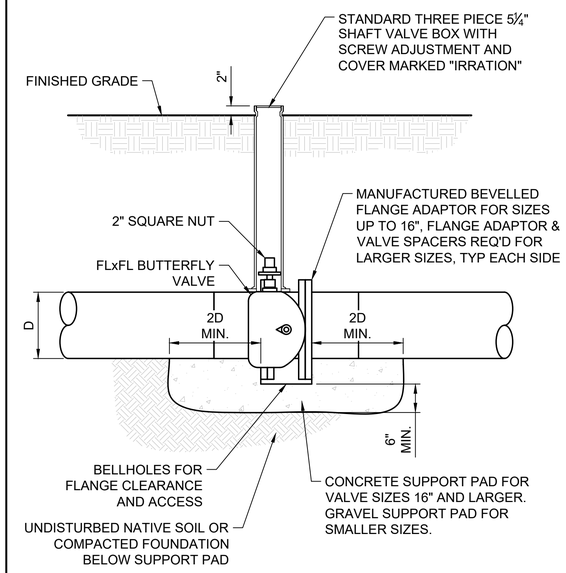

B4 BUTTERFLY VALVE ASSEMBLY WITH VALVE BOX
SCALE: 3/4"=1'-0"

NOTES:
1. INSTALL VALVE BOX PLUMB WITH GATE VALVE.
2. PROTECT VALVE BOX POSITION DURING BACKFILLING.
3. VERIFY OPERATION OF VALVE AFTER FINAL BACKFILL.
4. LEAVE DRAIN VALVE IN CLOSED POSITION AFTER INSTALLATION.

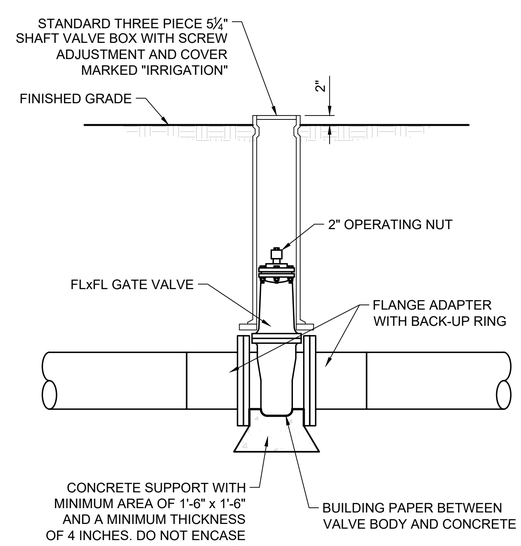

D3 GATE VALVE DETAIL
SCALE: 3/4"=1'-0"

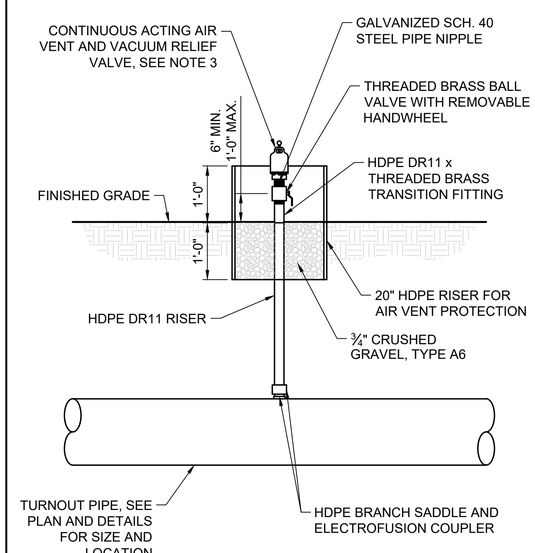

NOTES:
1. RISERS SHALL BE INSTALLED PLUMB.
2. LEAVE VALVE OPEN AFTER INSTALLATION.
3. WATERMAN CR-101 OR FRESNO SERIES 3500 CONTINUOUS ACTING AIR VENT AND VACUUM RELIEF VALVE, OR EQUAL, FOR 2" VALVE ASSEMBLIES UP TO 100 PSI. FRESNO SERIES 3500 CONTINUOUS ACTING AIR VENT AND VACUUM RELIEF VALVE, OR EQUAL, FOR 2" VALVE ASSEMBLIES UP TO 150 PSI.

D4 TURNOUT 2" AIR VALVE ASSEMBLY
SCALE: NOT TO SCALE

J-U-B ENGINEERS, INC.
J-U-B ENGINEERS, INC.
466 North 900 West
Kaysville, UT 84037
Phone: 801.547.0393
www.jub.com

BID SET

REGISTERED PROFESSIONAL ENGINEER
97-186246-2202
BRIAN DEETER
07/10/25
STATE OF UTAH

REUSE OF DRAWINGS
J-U-B SHALL RETAIN ALL COMMON LAW, STATUTORY, COPYRIGHT AND OTHER RESERVED RIGHTS OF THESE DRAWINGS, AND THE SAME SHALL NOT BE REUSED WITHOUT J-U-B'S PRIOR WRITTEN CONSENT. ANY REUSE WITHOUT WRITTEN CONSENT BY J-U-B WILL BE AT CLIENTS SOLE RISK AND WITHOUT LIABILITY OR LEGAL EXPOSURE TO J-U-B.

NO.	DESCRIPTION	BY	APR.	DATE
	REVISION			

CO-OP/HSBCC CANAL PRESSURIZATION PROJECT
CO-OP & HSBCC

TURNOUT DETAILS

FILE :	55-22-047 C-501X
JUB PROJ. # :	55-22-047
DRAWN BY:	JAS
DESIGN BY:	JSF
CHECKED BY:	JSF

ONE INCH
AT FULL SIZE, IF NOT ONE INCH, SCALE ACCORDINGLY

LAST UPDATED: 7/17/2025

SHEET NUMBER:
C-506

Plot Date:7/17/2025 11:19 AM Plotted By: Jon Frazier
Date Created:7/17/2025 \\JUB.COM\CENTRAL\CLIENTS\UT\COOPDITCH\PROJECTS\55-22-047_COOPDITCH2023\PIPING\PROJECT\DESIGN\CAD\SHEETS\55-22-047_C-501X.DWG

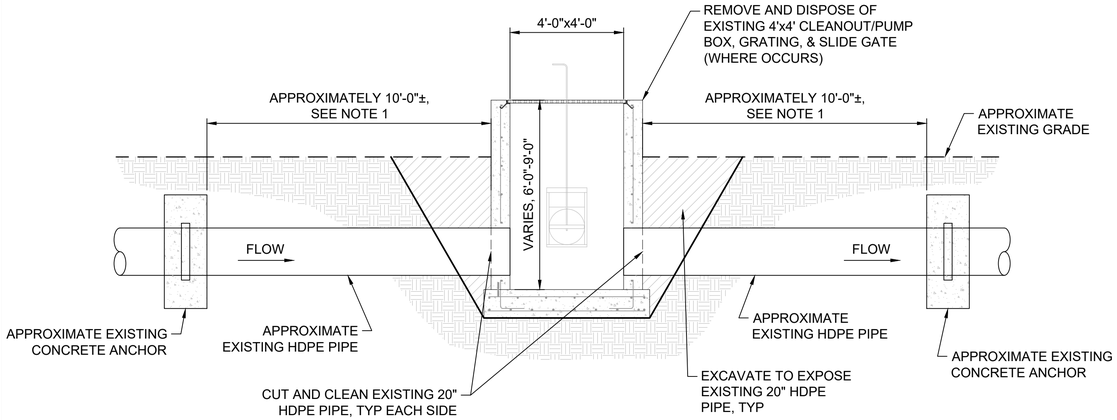

APPROXIMATE EXISTING 4'x4' CLEANOUT/PUMP BOX

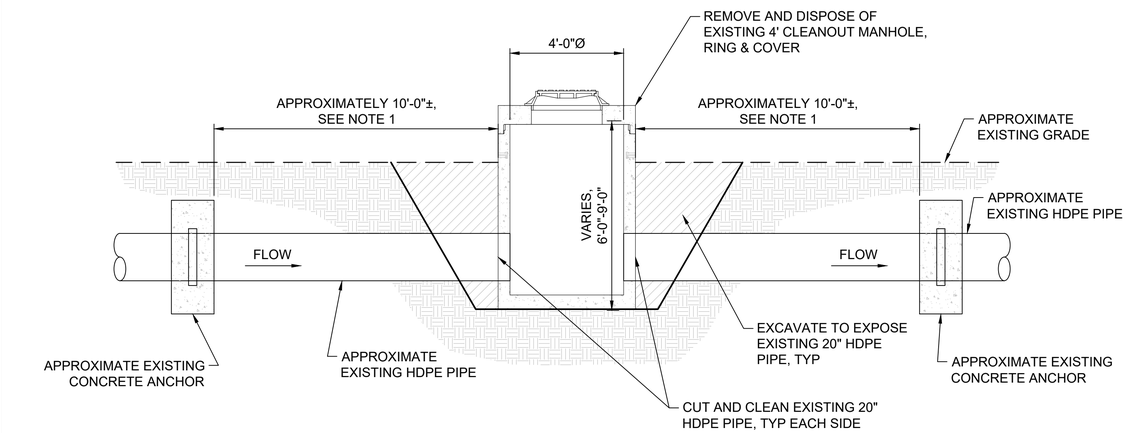

APPROXIMATE EXISTING 4' CLEANOUT MANHOLE

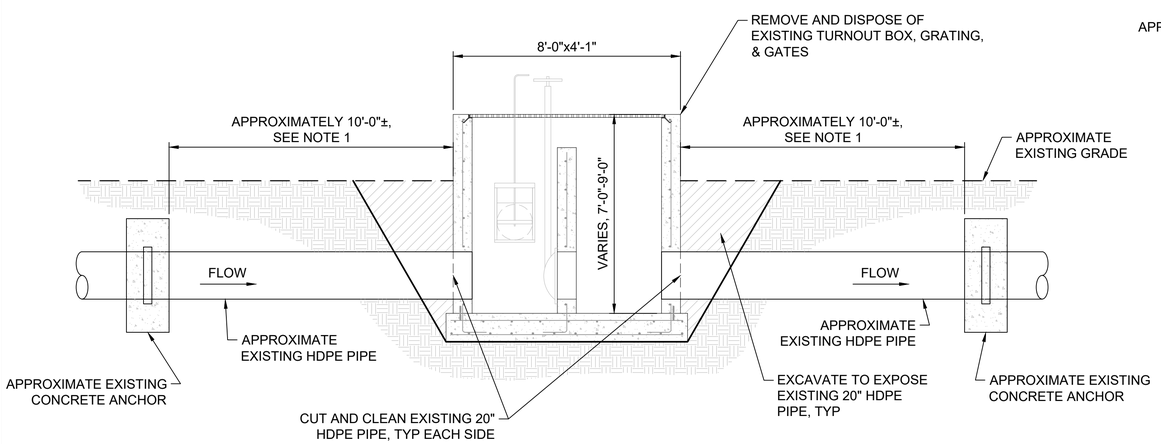

APPROXIMATE EXISTING TURNOUT BOX

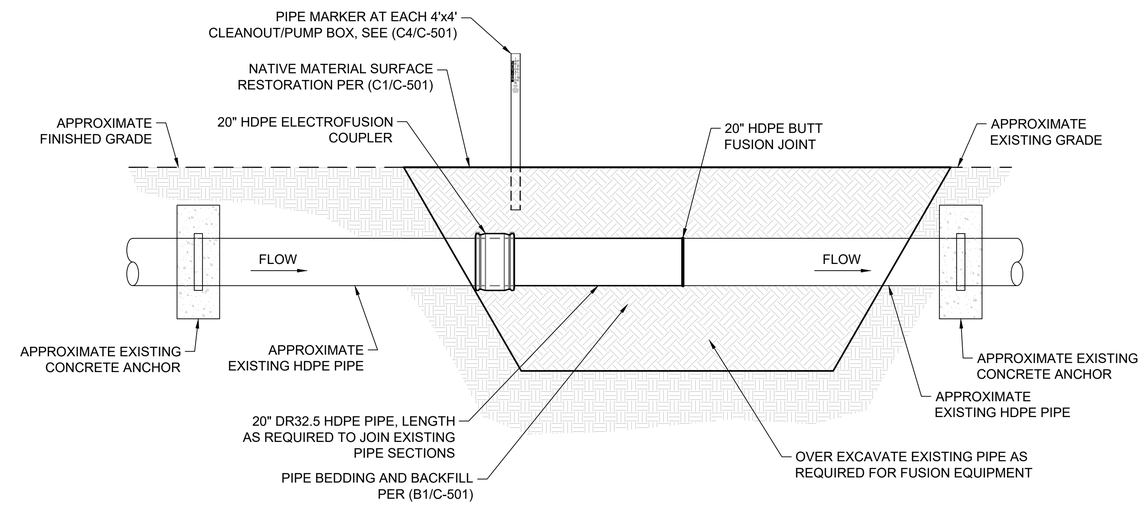

PROPOSED HDPE SPLICE WITHOUT AIR VALVE ASSEMBLY

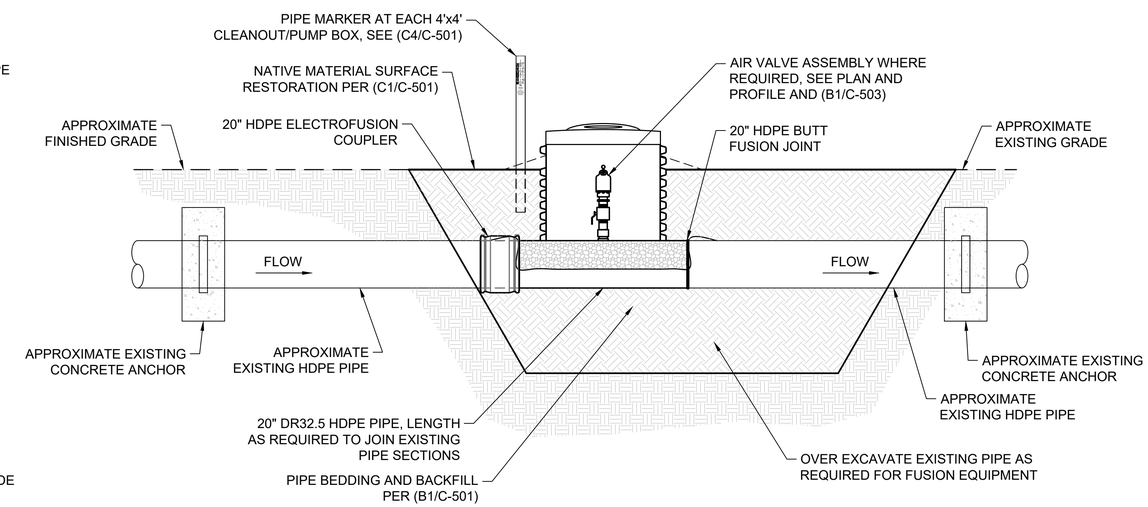

PROPOSED HDPE SPLICE WITH AIR VALVE ASSEMBLY

NOTES:

1. CONCRETE ANCHOR LOCATIONS SHOWN ARE FROM RECORD DRAWINGS, ACTUAL LOCATION MAY VARY. IF ANCHOR BLOCK INTERFERES WITH HDPE PIPE SLICE, THE ANCHOR BLOCK MAY BE REMOVED AND DISPOSED OF. ANCHOR BLOCKS ARE NOT REQUIRED ONCE HPDE PIPE SPLICE IS COMPLETE.
2. THE PREFERRED JOINING METHOD IS HDPE BUTT FUSION.
3. LIMITED ACCESS EQUIPMENT MAY BE USED TO ACCOMPLISH BUTT FUSION JOINT TO JOIN BOTH ENDS OF EXISTING PIPE IF POSSIBLE.
4. ELECTROFUSION COUPLERS MAY BE USED IN PLACE OF BUTT FUSION PROVIDED THE EXISTING PIPES ARE PROPERLY PREPARED, ROUNDED, AND THE JOINT IS CAPABLE OF THE PRESSURE RATING OF THE EXISTING PIPE AT NO ADDITIONAL COST TO THE OWNER.
5. FLANGE ADAPTERS MAY BE USED IN PLACE OF BUTT FUSION PROVIDED THE PIPE IS PROPERLY PREPARED AND THE JOINT IS CAPABLE OF THE PRESSURE RATING OF THE EXISTING PIPE AT NO ADDITIONAL COST TO THE OWNER. BOLTED CONNECTIONS MUST BE WRAPPED IN POLY-WRAP PRIOR TO BACKFILL.

D1 HDPE SPLICE AT EXISTING STRUCTURES
SCALE: NOT TO SCALE

J-U-B ENGINEERS, INC.
J-U-B ENGINEERS, INC.
466 North 900 West
Kaysville, UT 84037
Phone: 801.547.0393
www.jub.com

BID SET

REGISTERED PROFESSIONAL ENGINEER
97-186246-2202
BRIAN DEETER
07/10/25
STATE OF UTAH

REUSE OF DRAWINGS
J-U-B SHALL RETAIN ALL COMMON LAW, STATUTORY, COPYRIGHT AND OTHER RESERVED RIGHTS OF THESE DRAWINGS, AND THE SAME SHALL NOT BE REUSED WITHOUT J-U-B'S PRIOR WRITTEN CONSENT. ANY REUSE WITHOUT WRITTEN CONSENT BY J-U-B WILL BE AT CLIENTS SOLE RISK AND WITHOUT LIABILITY OR LEGAL EXPOSURE TO J-U-B.

NO.	DESCRIPTION	BY	APR.	DATE
	REVISION			

CO-OP/HSBCC CANAL PRESSURIZATION PROJECT
CO-OP & HSBCC

HDPE SPLICE DETAILS

FILE : 55-22-047_C-501X
JUB PROJ. # :55-22-047
DRAWN BY: JAS
DESIGN BY: JSF
CHECKED BY: JSF
ONE INCH
AT FULL SIZE, IF NOT ONE INCH, SCALE ACCORDINGLY
LAST UPDATED: 7/17/2025

SHEET NUMBER:
C-507

Plot Date:7/17/2025 11:20 AM Plotted By: Jon Frazier
Date Created:7/17/2025 \\JUB.COM\CENTRAL\CLIENTS\UT\COOPDITCH\PROJECTS\55-22-047_COOPDITCH2023\PIPING\PROJECT\DESIGN\CAD\SHEET\55-22-047_C-501X.DWG

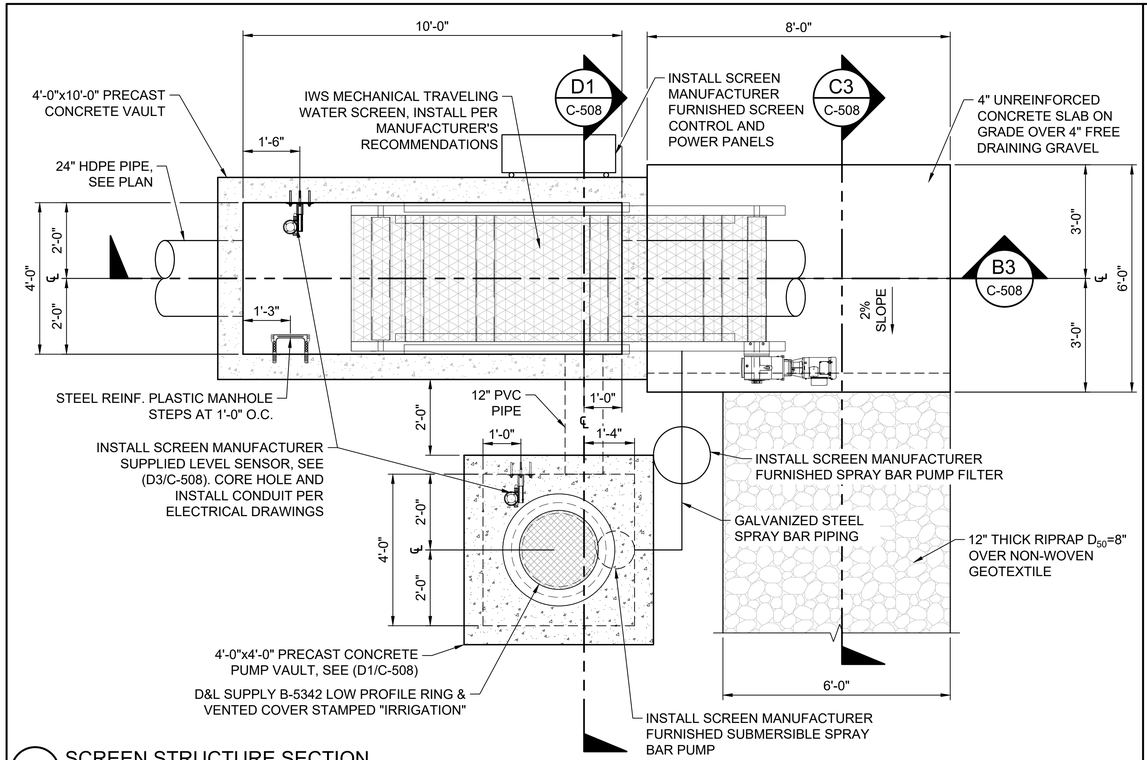

B1 SCREEN STRUCTURE SECTION
SCALE: 1/2"=1'-0"

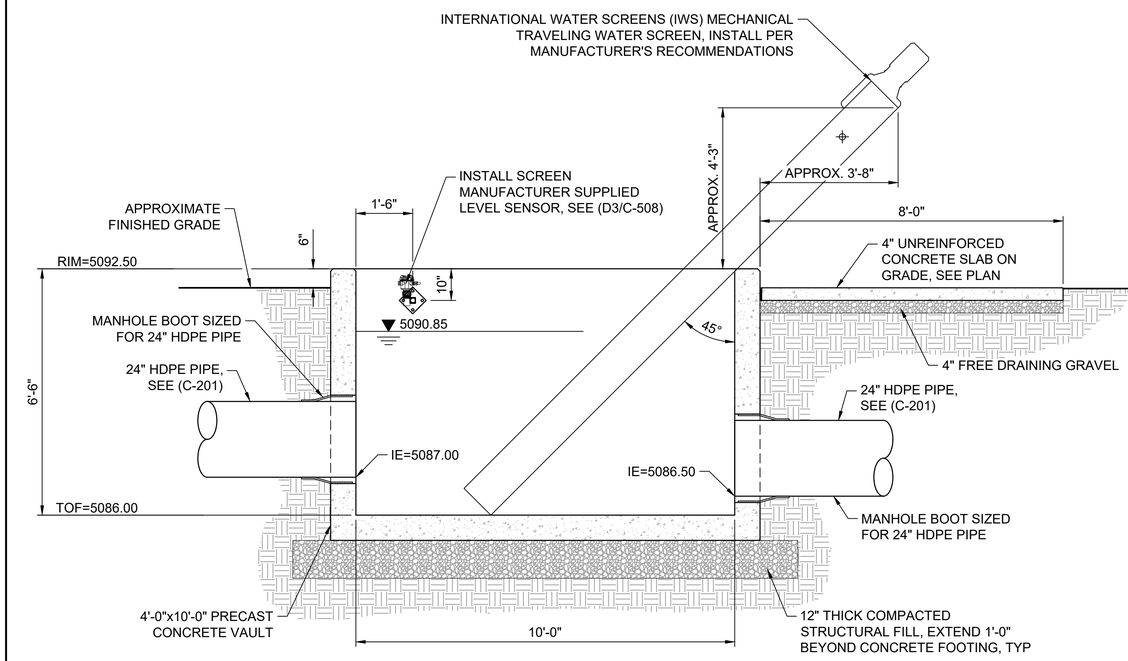

B3 SCREEN STRUCTURE SECTION
SCALE: 1/2"=1'-0"

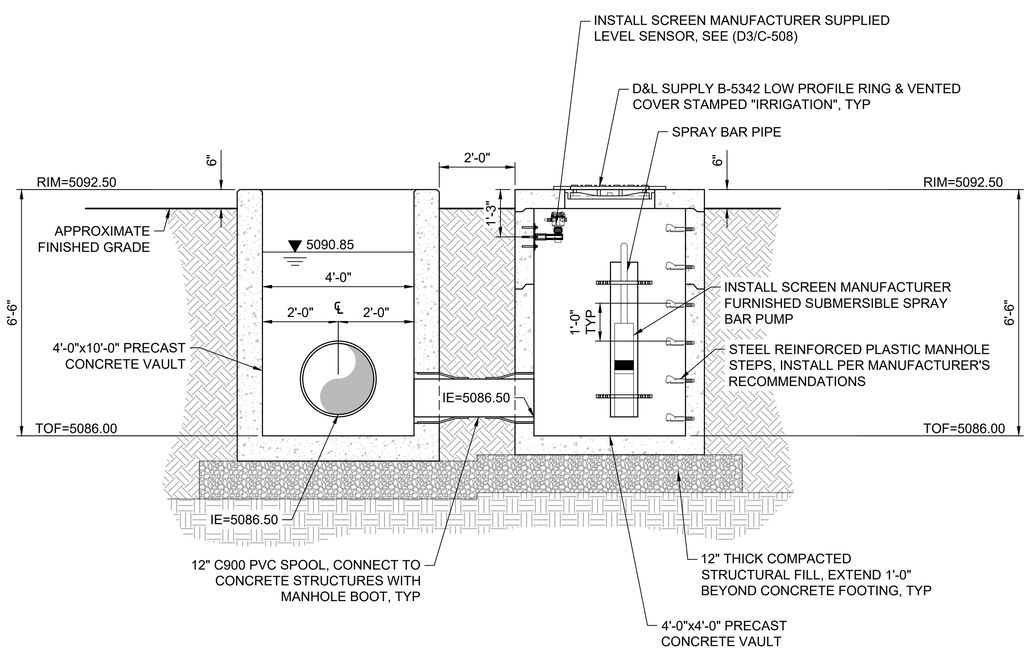

D1 SCREEN STRUCTURE & PUMP PIT SECTION
SCALE: 1/2"=1'-0"

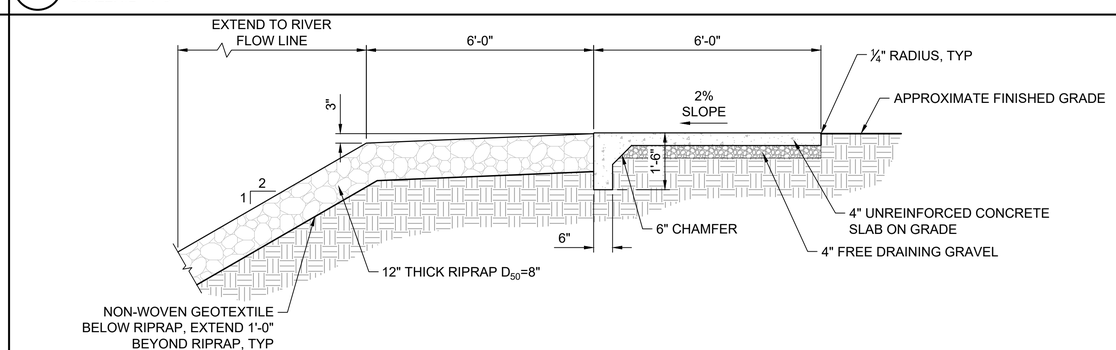

C3 RIPRAP CHANNEL DETAIL
SCALE: 1/2"=1'-0"

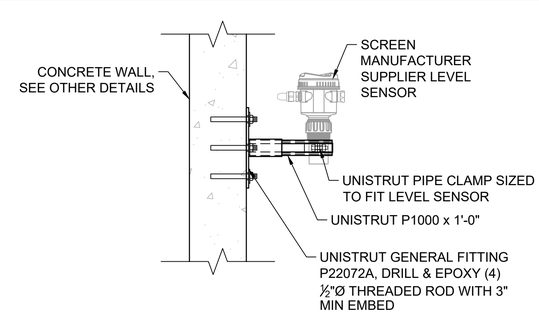

D3 LEVEL SENSOR SUPPORT DETAIL
SCALE: 1-1/2"=1'-0"

JUB
J-U-B ENGINEERS, INC.

J-U-B ENGINEERS, INC.
466 North 900 West
Kaysville, UT 84037
Phone: 801.547.0393
www.jub.com

BID SET

REGISTERED PROFESSIONAL ENGINEER
97-186246-2202
BRIAN DEETER
07/10/25
STATE OF UTAH

REUSE OF DRAWINGS
J-U-B SHALL RETAIN ALL COMMON LAW, STATUTORY, COPYRIGHT AND OTHER RESERVED RIGHTS OF THESE DRAWINGS, AND THE SAME SHALL NOT BE REUSED WITHOUT J-U-B'S PRIOR WRITTEN CONSENT. ANY REUSE WITHOUT WRITTEN CONSENT BY J-U-B WILL BE AT CLIENT'S SOLE RISK AND WITHOUT LIABILITY OR LEGAL EXPOSURE TO J-U-B.

NO.	DESCRIPTION	BY	APR.	DATE
	REVISION			

CO-OP/HSBCC CANAL PRESSURIZATION PROJECT
CO-OP & HSBCC

SCREEN STRUCTURE DETAILS

FILE :	55-22-047_C-501X
JUB PROJ. # :	55-22-047
DRAWN BY:	JAS
DESIGN BY:	JSF
CHECKED BY:	JSF

ONE INCH
AT FULL SIZE, IF NOT ONE INCH, SCALE ACCORDINGLY

LAST UPDATED: 7/17/2025

SHEET NUMBER:
C-508

Plot Date:7/17/2025 11:21 AM Plotted By: Jon Frazier
Date Created:7/17/2025 \\JUB.COM\CENTRAL\CLIENTS\UT\COOPDITCH\PROJECTS\55-22-047_COOPDITCH2023\PIPING\PROJECT\DESIGN\CAD\SHEETS\55-22-047_C-501X.DWG

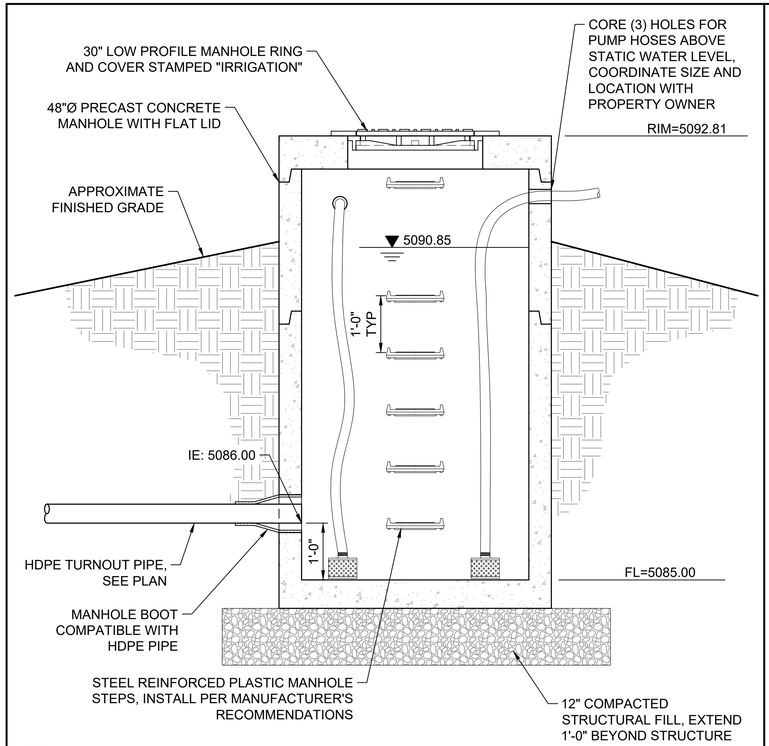

B1 TURNOUT-01 PUMP PIT DETAIL
SCALE:3/4"=1'-0"

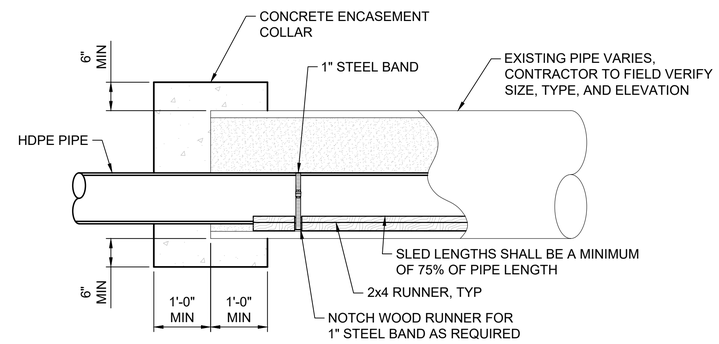

CONDITION AT END OF EXISTING PIPE

NOTES:
1. CONCRETE: f'c=3,000psi AT 28-DAY STRENGTH
2. CONTROLLED LOW-STRENGTH MATERIAL (CLSM) SHALL MEET THE REQUIREMENTS OF APWA SECTION 31 05 15 AND HAVE A 28-DAY STRENGTH OF 60psi MAXIMUM.

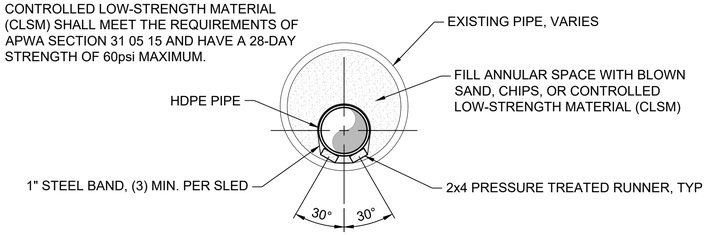

PIPE SLED SECTION VIEW

B2 HDPE PIPE SLED AND SLIP LINE DETAIL
SCALE:NOT TO SCALE

NOTES:
1. INSTALL DRAIN ON DOWNHILL SIDE OF MAIN LINE IRRIGATION PIPE.
2. VERIFY OPERATION OF VALVE AFTER FINAL BACKFILL.
3. LEAVE DRAIN VALVE IN CLOSED POSITION AFTER INSTALLATION.

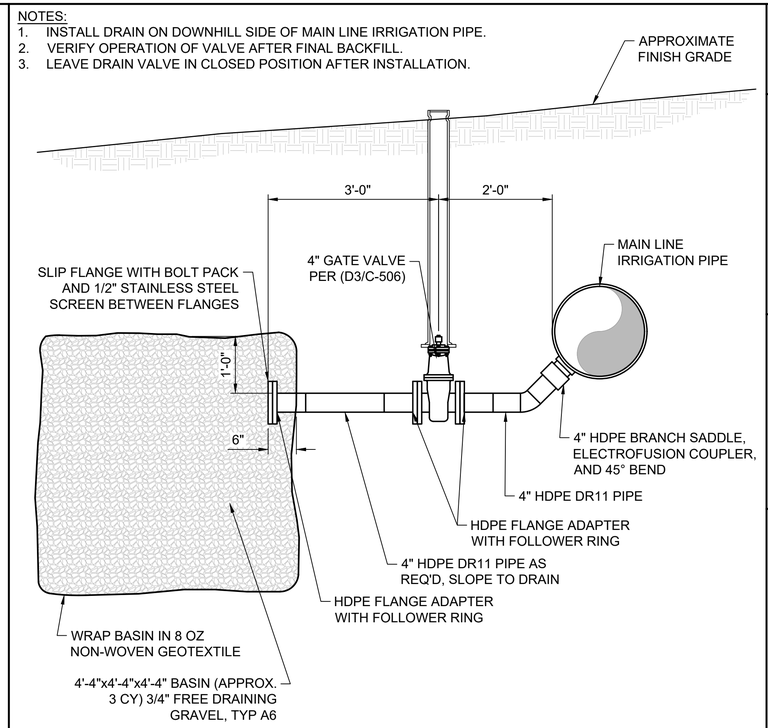

B3 TYPICAL MAIN LINE DRAIN DETAIL
SCALE:3/4"=1'-0"

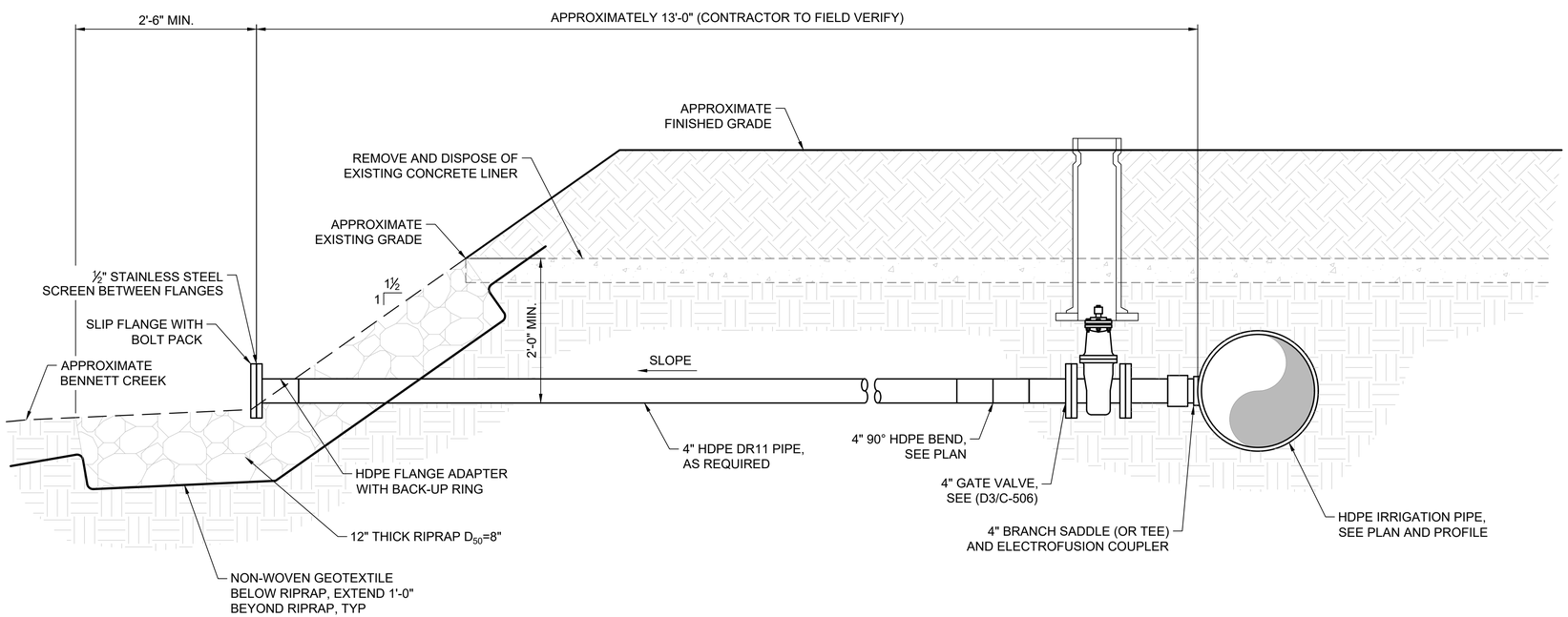

D1 CO-OP DRAIN DETAIL
SCALE: 1"=1'-0"

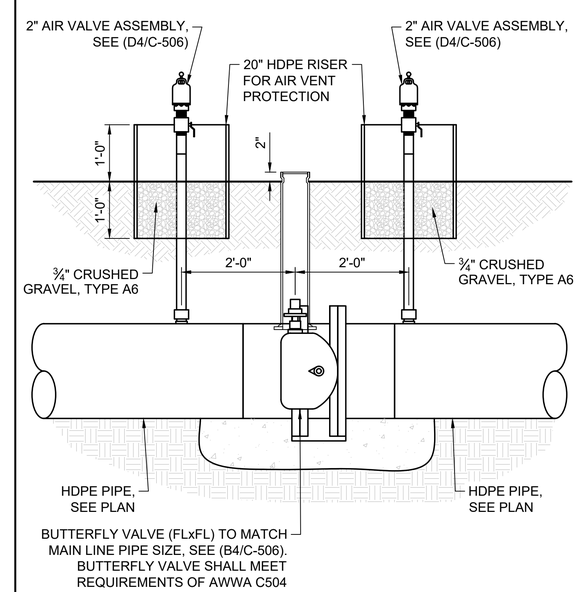

D4 HSBCC ISOLATION VALVE
SCALE: 3/4"=1'-0"

J-U-B ENGINEERS, INC.
J-U-B ENGINEERS, INC.
466 North 900 West
Kaysville, UT 84037
Phone: 801.547.0393
www.jub.com

BID SET

REGISTERED PROFESSIONAL ENGINEER
97-186246-2202
BRIAN DEETER
07/10/25
STATE OF UTAH

REUSE OF DRAWINGS
J-U-B SHALL RETAIN ALL OWNERSHIP, INTELLECTUAL PROPERTY, COPYRIGHT AND OTHER RESERVED RIGHTS OF THESE DRAWINGS, AND THE SAME SHALL NOT BE REUSED WITHOUT J-U-B'S PRIOR WRITTEN CONSENT. ANY REUSE WITHOUT WRITTEN CONSENT BY J-U-B WILL BE AT CLIENT'S SOLE RISK AND WITHOUT LIABILITY OR LEGAL EXPOSURE TO J-U-B.

NO.	DESCRIPTION	BY	APR.	DATE
	REVISION			

CO-OP/HSBCC CANAL PRESSURIZATION PROJECT
CO-OP & HSBCC

PIPELINE DETAILS

FILE : 55-22-047_C-501X
JUB PROJ. # :55-22-047
DRAWN BY: JAS
DESIGN BY: JSF
CHECKED BY: JSF
ONE INCH
AT FULL SIZE, IF NOT ONE INCH, SCALE ACCORDINGLY
LAST UPDATED: 7/17/2025

SHEET NUMBER:
C-509

Plot Date:7/17/2025 11:22 AM Plotted By:- Jon Frazer
Date Created:7/17/2025 \\JUB.COM\CENTRAL\CLIENTS\UT\COOPDITCH\PROJECTS\55-22-047_COOPDITCH2023PIPING\PROJECT\DESIGN\CAD\SHEETS\55-22-047_C-501X.DWG

NOTES:
1. CONCRETE ANCHOR LOCATIONS SHOWN ARE FROM RECORD DRAWINGS, ACTUAL LOCATION MAY VARY. IF ANCHOR BLOCK INTERFERES WITH HDPE PIPE SLICE, THE ANCHOR BLOCK MAY BE REMOVED AND DISPOSED OF. ANCHOR BLOCKS ARE NOT REQUIRED ONCE HPDE PIPE SPLICE IS COMPLETE.
2. THE PREFERRED JOINING METHOD IS HDPE BUTT FUSION.
3. LIMITED ACCESS EQUIPMENT MAY BE USED TO ACCOMPLISH BUTT FUSION JOINT TO JOIN BOTH ENDS OF EXISTING PIPE IF POSSIBLE.
4. ELECTROFUSION COUPLERS MAY BE USED IN PLACE OF BUTT FUSION PROVIDED THE EXISTING PIPES ARE PROPERLY PREPARED, ROUNDED, AND THE JOINT IS CAPABLE OF THE PRESSURE RATING OF THE EXISTING PIPE AT NO ADDITIONAL COST TO THE OWNER.
5. FLANGE ADAPTERS MAY BE USED IN PLACE OF BUTT FUSION PROVIDED THE PIPE IS PROPERLY PREPARED AND THE JOINT IS CAPABLE OF THE PRESSURE RATING OF THE EXISTING PIPE AT NO ADDITIONAL COST TO THE OWNER. BOLTED CONNECTIONS MUST BE WRAPPED IN POLY-WRAP PRIOR TO BACKFILL.

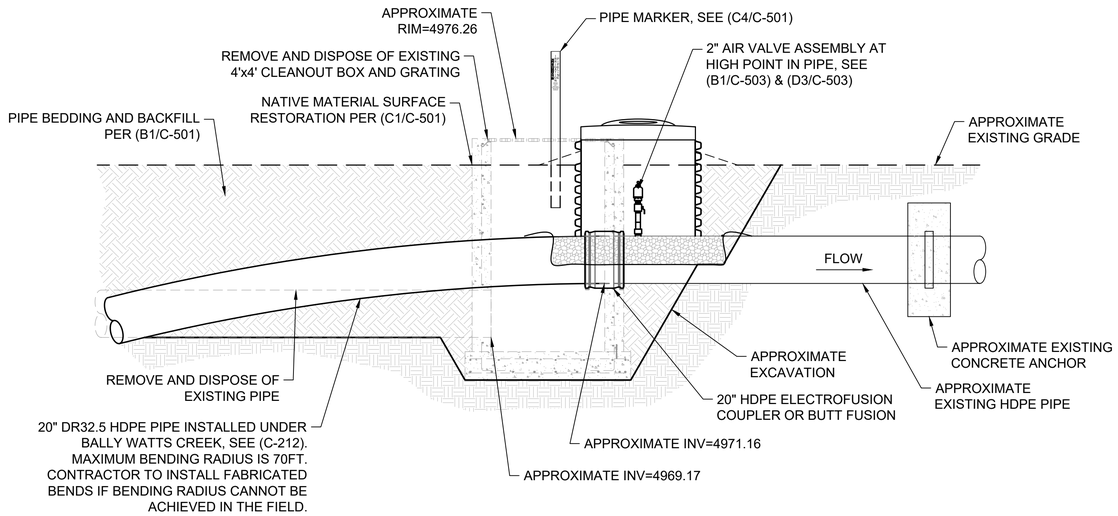

B1 CONNECTION TO EXISTING HSBCC PIPE
SCALE:3/8"=1'-0"

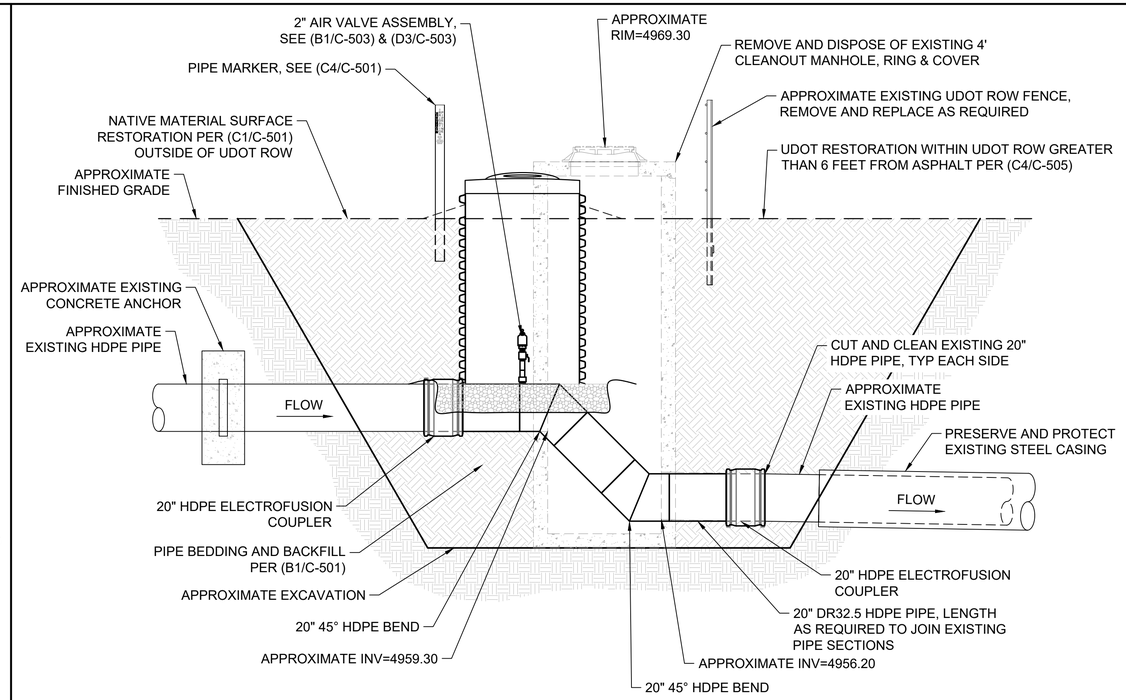

B3 TRAPPERS LOOP SIPHON ENTRANCE
SCALE:NOT TO SCALE

SEE NOTES ON (B1/C-510)

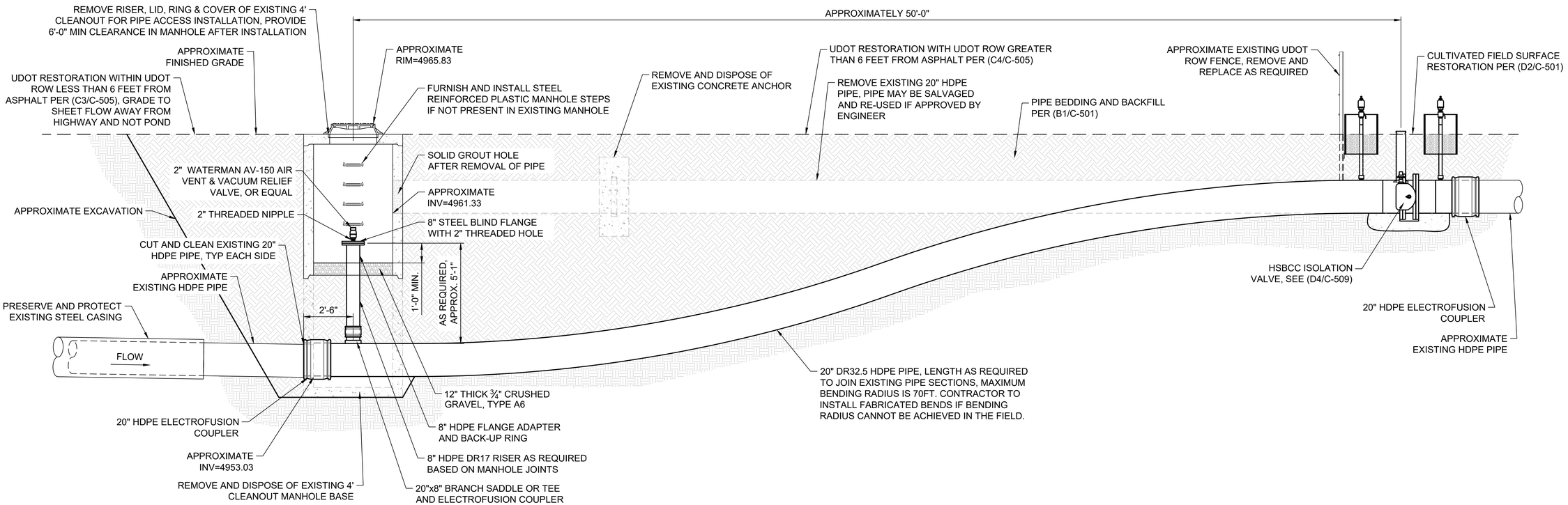

D1 TRAPPERS LOOP SIPHON EXIT
SCALE:NOT TO SCALE

SEE NOTES ON (B1/C-510)

JUB
J-U-B ENGINEERS, INC.
J-U-B ENGINEERS, INC.
466 North 900 West
Kaysville, UT 84037
Phone: 801.547.0393
www.jub.com

BID SET

REGISTERED PROFESSIONAL ENGINEER
97-186246-2202
BRIAN DEETER
07/10/25
STATE OF UTAH

REUSE OF DRAWINGS
J-U-B SHALL RETAIN ALL OWNERSHIP, INTERESTS, AND STATUTORY COPYRIGHT AND OTHER RESERVED RIGHTS OF THESE DRAWINGS, AND THE SAME SHALL NOT BE REUSED WITHOUT J-U-B'S PRIOR WRITTEN CONSENT. ANY REUSE WITHOUT WRITTEN CONSENT BY J-U-B WILL BE AT CLIENTS SOLE RISK AND WITHOUT LIABILITY OR LEGAL EXPOSURE TO J-U-B.

NO.	DESCRIPTION	BY	APR.	DATE
	REVISION			

CO-OP/HSBCC CANAL PRESSURIZATION PROJECT
CO-OP & HSBCC

PIPELINE DETAILS

FILE : 55-22-047 C-501X
JUB PROJ. # : 55-22-047
DRAWN BY: JAS
DESIGN BY: JSF
CHECKED BY: JSF
ONE INCH
AT FULL SIZE, IF NOT ONE INCH, SCALE ACCORDINGLY
LAST UPDATED: 7/17/2025

SHEET NUMBER:
C-510

Plot Date:7/21/2025 10:04 AM Plotted By: Jon Frazier
Date Created:7/17/2025 \\JUB.COM\CENTRAL\CLIENTS\UT\COOPDITCH\PROJECTS\55-22-047_COOPDITCH\2023\PIPNGPROJECT\DESIGN\CAD\SHEETS\55-22-047_C-501X.DWG

NOTES:
1. SEE NOTES ON (B1/C-510) FOR ADDITIONAL INFORMATION ON JOINING TO EXISTING PIPE.
2. ACTUAL CONDITIONS MAY VARY, NOTIFY ENGINEER IF EXISTING CONDITIONS DIFFER PRIOR TO CONSTRUCTING TRANSITION.

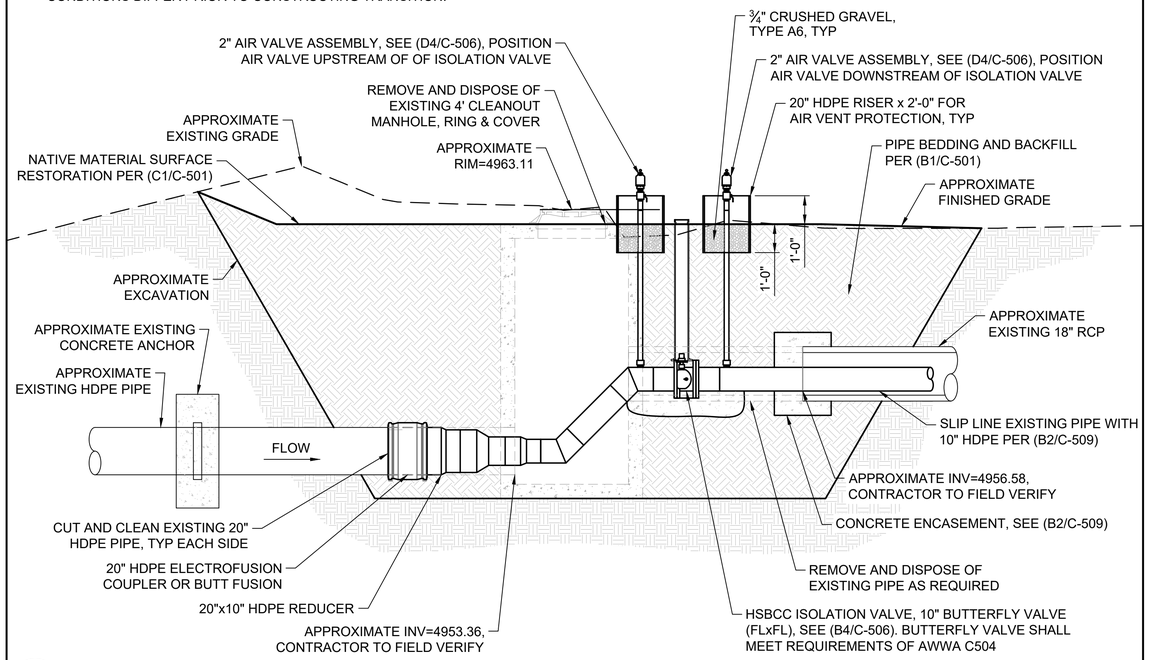

B1 EXISTING PIPE TRANSTION TO NEW PIPE DETAIL
SCALE:NOT TO SCALE

LATERAL/TURNOUT PRESSURE DISSIPATION NOZZLE

LOCATION	DESIGN FLOW	PIPE SIZE	PIPE DR	PIPE WALL THICKNESS	STATIC PRESSURE	WORKING PRESSURE	NOZZLE SIZE "P"	TOTAL NUMBER OF HOLES	HOLE DIAMETER "d"	NUMBER OF HOLES PER ROW "n"	NUMBER OF ROWS OF HOLES "r"	SPACING OF ROWS "s"	NOZZLE LENGTH "L"
	(gpm)	(in)		(in)	(psi)	(psi)	(in)		(in)			(in)	(in)
HSBCC LATERAL-01	100	4	11	0.409	56	29	2	6	9/16	3	2	1.5	4.5
HSBCC LATERAL-02	195	4	11	0.409	58	32	2	9	5/8	3	3	1.5	6
HSBCC-50	440	6	11	0.602	59.5	43	3	9	7/8	3	3	1.5	6

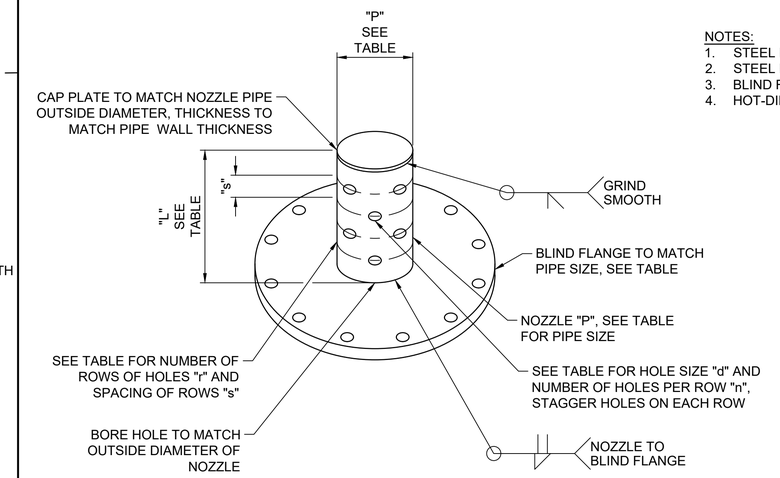

NOTES:
1. STEEL PIPE SHALL BE ASTM A53 GRADE B, Fy=35 ksi.
2. STEEL PLATE SHALL BE ASTM A36, Fy=36 ksi.
3. BLIND FLANGE SHALL BE ASME B16.5 CLASS 150.
4. HOT-DIP GALVANIZE ALL COMPONENTS AFTER FABRICATION.

B3 LATERAL/TURNOUT PRESSURE DISSIPATION NOZZLE DETAIL
SCALE:NOT TO SCALE

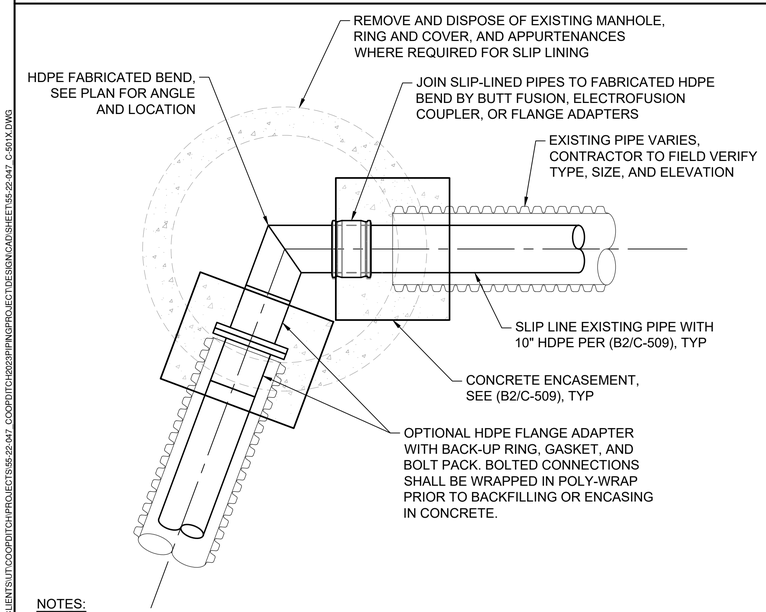

NOTES:
1. CONTRACTOR TO FIELD VERIFY MANHOLE LOCATIONS, ELEVATIONS, AND CONDITIONS PRIOR TO SLIP LINING CULVERTS. NOTIFY ENGINEER OF DISCREPANCIES.
2. COORDINATE SURFACE RESTORATION WITH HSBCC AND THE ESCAPES AT THE EDGEWATER HOMEOWNERS ASSOCIATION.
   2.1. MANHOLES IN ASPHALT: LIMIT REMOVAL OF ASPHALT FOR SLIP LINING CULVERT. RESTORE ASPHALT PER (D3/C-501).
   2.2. MANHOLES IN LANDSCAPED AREAS: LIMIT DISTURBANCE OF LANDSCAPED AREAS. RESTORE SURFACE WITH SOD.

D1 FABRICATED BEND AT MANHOLE DETAIL
SCALE:NOT TO SCALE

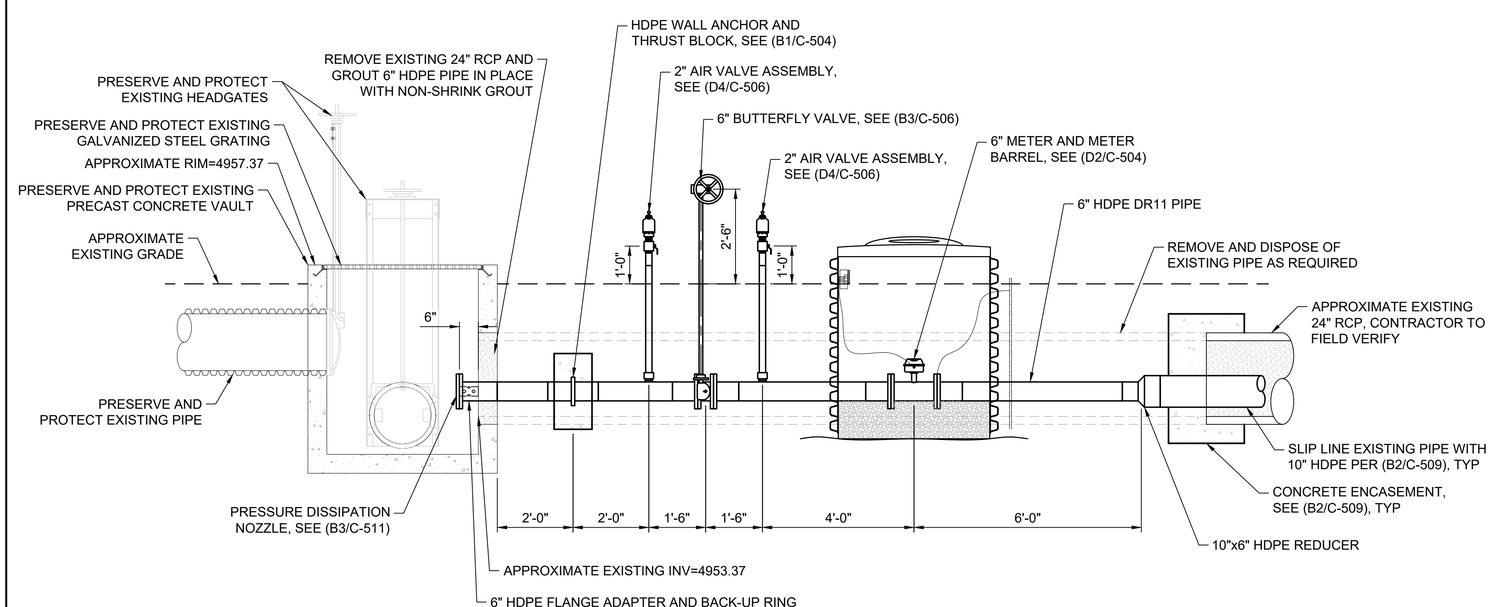

D2 HSBCC OUTLET DETAIL
SCALE:NOT TO SCALE

J-U-B ENGINEERS, INC.
J-U-B ENGINEERS, INC.
466 North 900 West
Kaysville, UT 84037
Phone: 801.547.0393
www.jub.com

BID SET

REGISTERED PROFESSIONAL ENGINEER
97-186246-2202
BRIAN DEETER
07/10/25
STATE OF UTAH

REUSE OF DRAWINGS
J-U-B SHALL RETAIN ALL COMMON LAW, STATUTORY, COPYRIGHT AND OTHER RESERVED RIGHTS OF THESE DRAWINGS, AND THE SAME SHALL NOT BE REUSED WITHOUT J-U-B'S PRIOR WRITTEN CONSENT. ANY REUSE WITHOUT WRITTEN CONSENT BY J-U-B WILL BE AT CLIENT'S SOLE RISK AND WITHOUT LIABILITY OR LEGAL EXPOSURE TO J-U-B.

NO.	DESCRIPTION	BY	APR.	DATE
	REVISION			

CO-OP/HSBCC CANAL PRESSURIZATION PROJECT
CO-OP & HSBCC

PIPELINE DETAILS

FILE : 55-22-047 C-501X
JUB PROJ. # :55-22-047
DRAWN BY: JAS
DESIGN BY: JSF
CHECKED BY: JSF
ONE INCH
AT FULL SIZE, IF NOT ONE INCH, SCALE ACCORDINGLY
LAST UPDATED: 7/17/2025

SHEET NUMBER:
C-511

Plot Date:7/17/2025 11:24 AM Plotted By: Jon Frazier
Date Created:7/17/2025 \\JUB.COM\CENTRAL\CLIENTS\UT\COOPDITCH\PROJECTS\55-22-047_COOPDITCH2023PIPINGPROJECT\DESIGN\CAD\SHEETS\55-22-047_C-501X.DWG

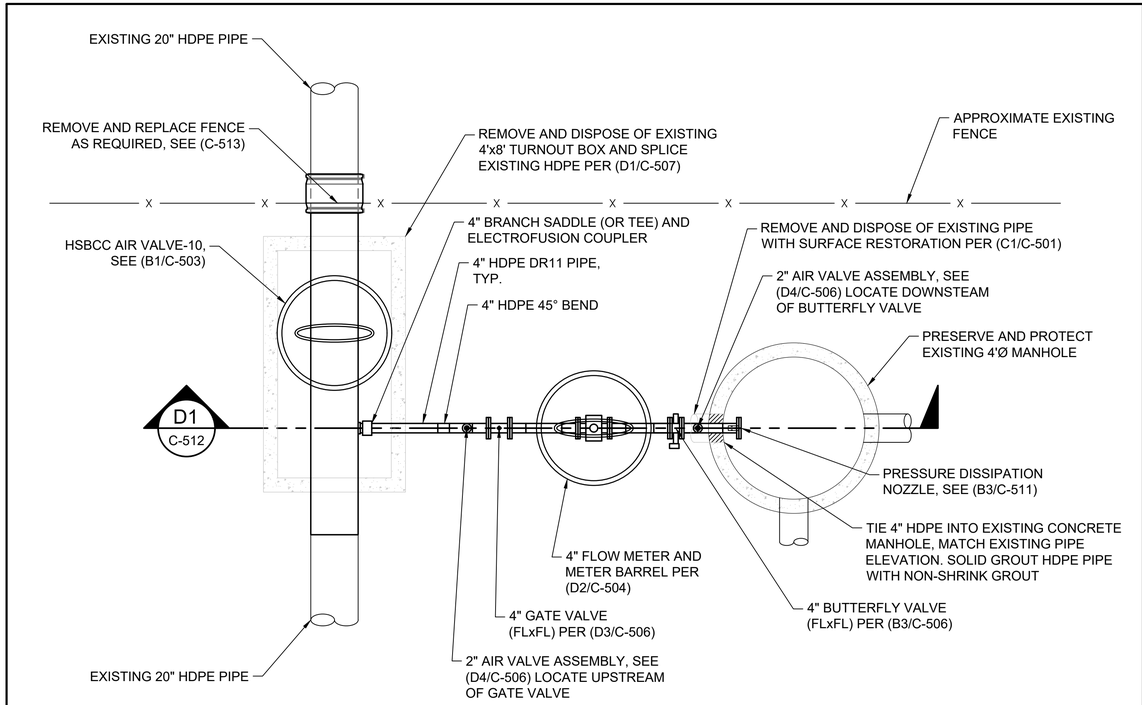

B1 HSBCC LATERAL-01 PLAN VIEW
SCALE:NOT TO SCALE

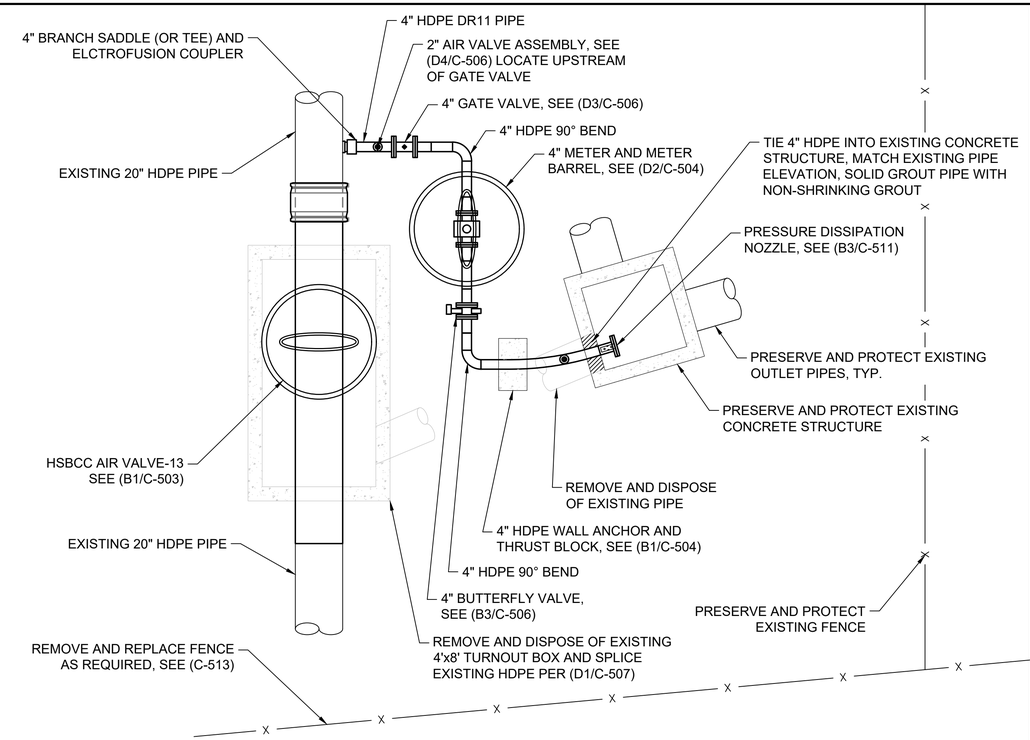

B3 HSBCC LATERAL-02 PLAN VIEW
SCALE:NOT TO SCALE

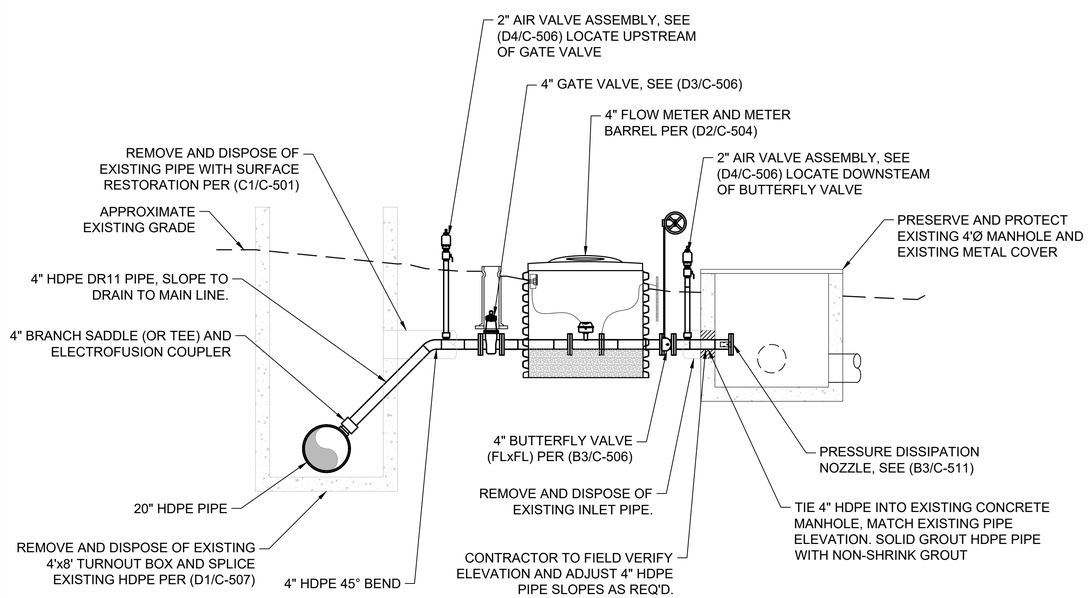

D1 HSBCC LATERAL-01 SECTION VIEW
SCALE:NOT TO SCALE

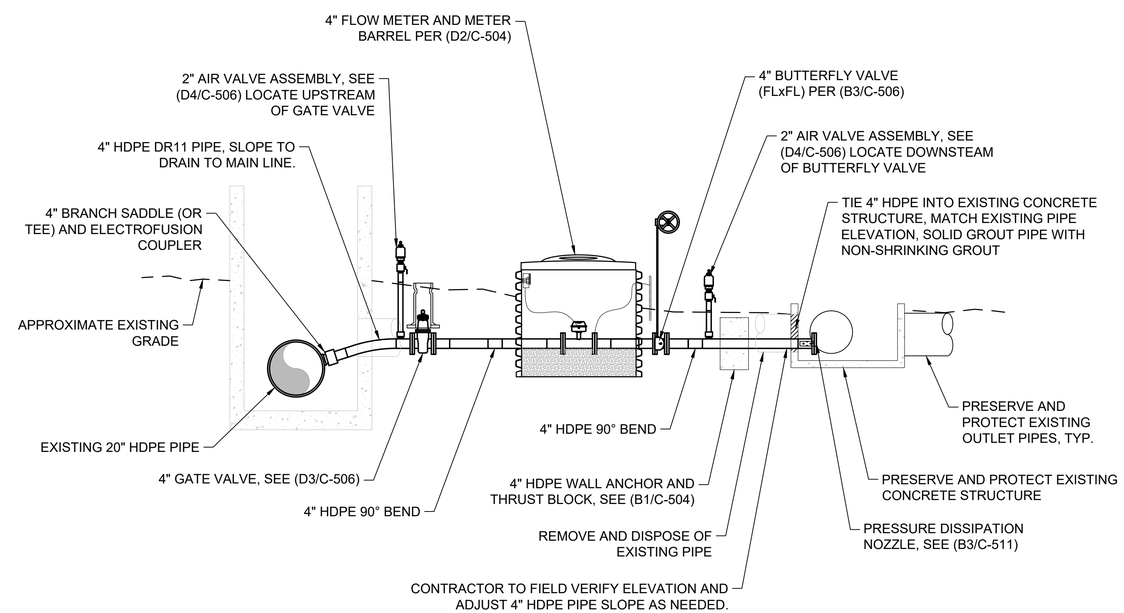

D3 HSBCC LATERAL-02 SECTION VIEW
SCALE:NOT TO SCALE

J-U-B ENGINEERS, INC.
J-U-B ENGINEERS, INC.
466 North 900 West
Kaysville, UT 84037
Phone: 801.547.0393
www.jub.com

BID SET

REGISTERED PROFESSIONAL ENGINEER
97-186246-2202
BRIAN DEETER
07/10/25
STATE OF UTAH

REUSE OF DRAWINGS
J-U-B SHALL RETAIN ALL COMMON LAW, STATUTORY, COPYRIGHT AND OTHER RESERVED RIGHTS OF THESE DRAWINGS, AND THE SAME SHALL NOT BE REUSED WITHOUT J-U-B'S PRIOR WRITTEN CONSENT. ANY REUSE WITHOUT WRITTEN CONSENT BY J-U-B WILL BE AT CLIENTS SOLE RISK AND WITHOUT LIABILITY OR LEGAL EXPOSURE TO J-U-B.

NO.	DESCRIPTION	BY	APR.	DATE
	REVISION			

CO-OP/HSBCC CANAL PRESSURIZATION PROJECT
CO-OP & HSBCC

HSBCC LATERAL-01 & 02 DETAILS

FILE : 55-22-047_C-501X
JUB PROJ. # :55-22-047
DRAWN BY: JAS
DESIGN BY: JSF
CHECKED BY: JSF
ONE INCH
AT FULL SIZE, IF NOT ONE INCH, SCALE ACCORDINGLY
LAST UPDATED: 7/17/2025

SHEET NUMBER:
C-512

Plot Date:7/17/2025 11:25 AM Plotted By:- Jon Frazer
Date Created:7/17/2025 \\JUB.COM\CENTRAL\CLIENTS\UT\COOPDITCH\PROJECTS\55-22-047_COOPDITCH2023\PIPING\PROJECT\DESIGN\CAD\SHEET\55-22-047 C-501X.DWG

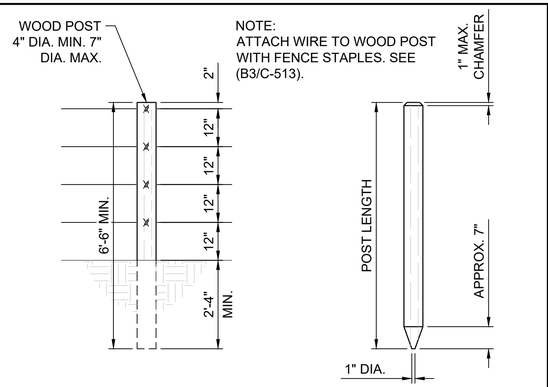

LINE POST DETAIL

PERMISSABLE MODIFICATIONS FOR DRIVEN POSTS

B1 WOOD LINE POSTS
SCALE: 1"=2'

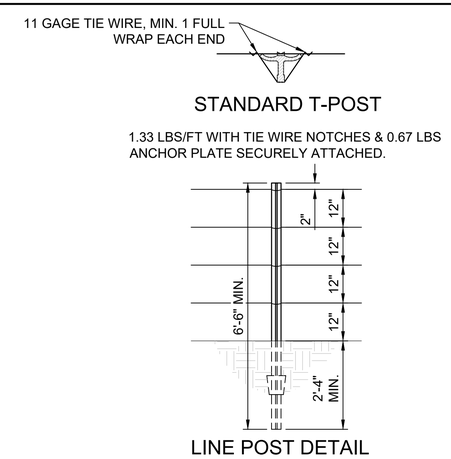

LINE POST DETAIL

B2 METAL LINE POSTS
SCALE: 1"=2'

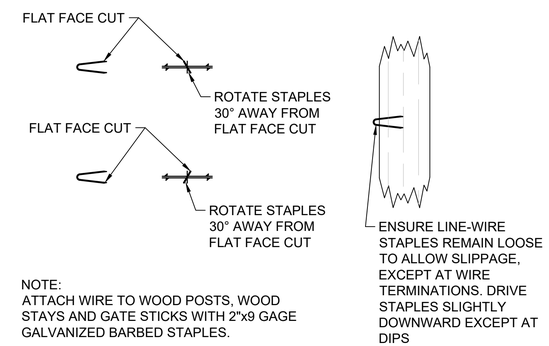

NOTE:
ATTACH WIRE TO WOOD POSTS, WOOD STAYS AND GATE STICKS WITH 2"x9 GAGE GALVANIZED BARBED STAPLES.

B3 WIRE ATTACHMENT TO WOOD POSTS & STAYS
SCALE: 1"=1'

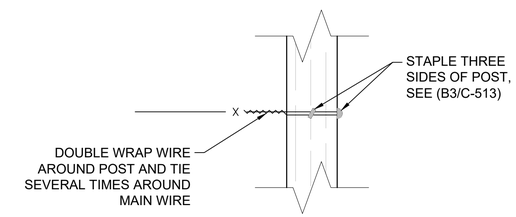

B4 TERMINATING WIRE AT END & BRACE POSTS
SCALE: 1"=1'

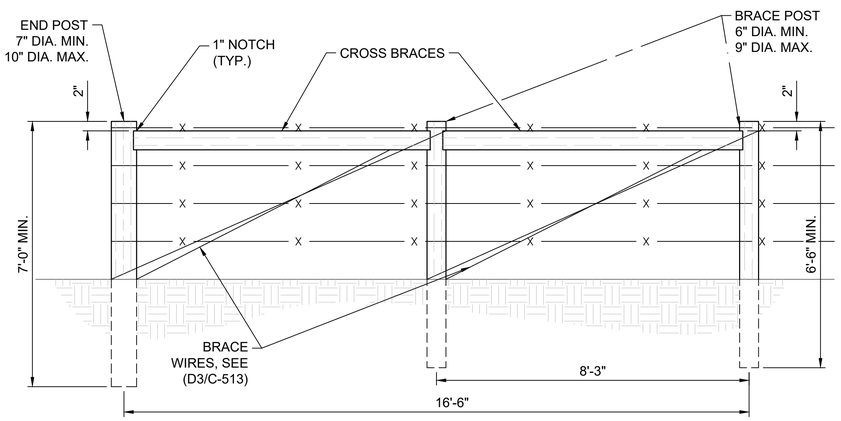

NOTES:
1. CROSS BRACES PROVIDE WOOD CROSS BRACES THAT HAVE A MINIMUM DIAMETER OF 4 INCHES. INSTALL TOP OF CROSS BRACE FLUSH WITH TOP WIRE.
2. BRACE TIE WIRES STAPLE BRACE AND TIE WIRE WITH A MINIMUM OF THREE STAPLES TO EACH WOOD POST PER (B3/C-513). TWIST TIE WIRES TOGETHER TO FORM A TIGHT COMPOSITE BRACE PER (D3/C-513).
3. BRACE AND END POSTS PROVIDE WOOD BRACE AND END POSTS AS SHOWN.

C1 DOUBLE END PANEL
SCALE: 1"=2'

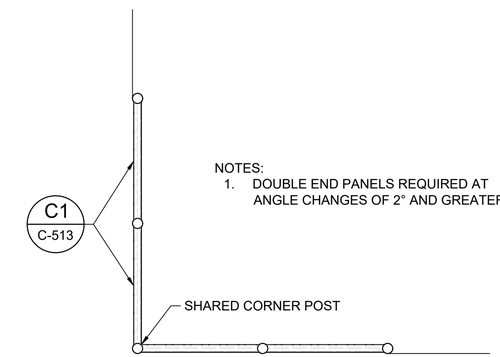

NOTES:
1. DOUBLE END PANELS REQUIRED AT ANGLE CHANGES OF 2° AND GREATER

PLAN VIEW

C3 CORNER INSTALLATION - DOUBLE END PANELS
SCALE: 1"=5'

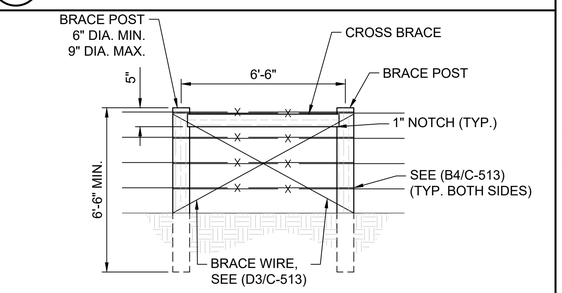

NOTES:
1. CROSS BRACES PROVIDE WOOD CROSS BRACES THAT HAVE A MINIMUM DIAMETER OF 4 INCHES. INSTALL TOP OF CROSS BRACE FLUSH WITH TOP WIRE.
2. BRACE TIE WIRES STAPLE BRACE AND TIE WIRE WITH A MINIMUM OF THREE STAPLES TO EACH WOOD POST PER (B3/C-513). TWIST TIE WIRES TOGETHER TO FORM A TIGHT COMPOSITE BRACE PER (D3/C-513).
3. BRACE AND END POSTS PROVIDE WOOD BRACE AND END POSTS AS SHOWN.

C4 BRACE PANEL
SCALE: 1"=3'

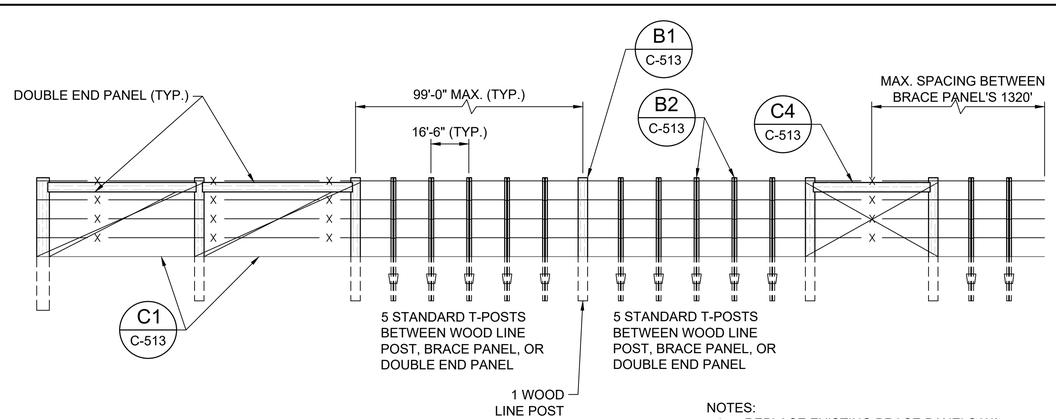

NOTES:
1. REPLACE EXISTING BRACE PANELS W/ NEW BRACE PANELS.
2. ADD BRACE PANELS WHERE REQUIRED TO MEET SPACING REQUIREMENTS.

D1 TYPICAL FENCE
SCALE: 1"=4'

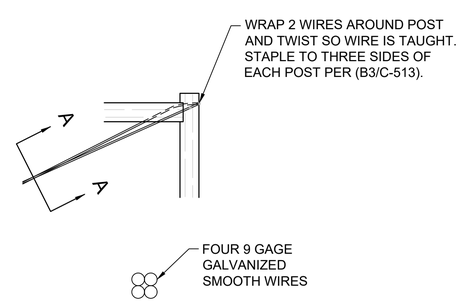

SECTION A-A

D3 BRACE WIRE DETAIL
SCALE: 1"=2'

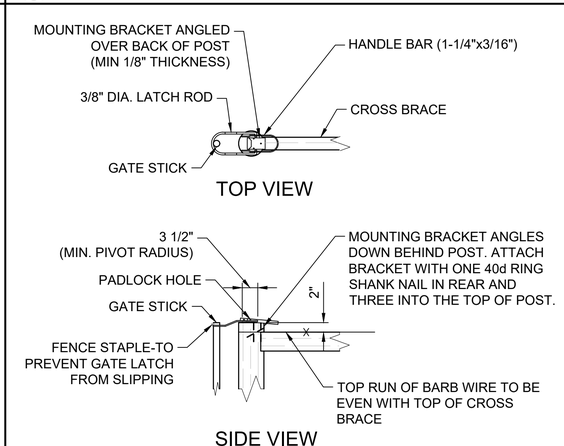

TOP VIEW

SIDE VIEW

D4 TYPICAL GATE TIGHTENER
SCALE: 1"=2'

J-U-B ENGINEERS, INC.

J-U-B ENGINEERS, INC.
466 North 900 West
Kaysville, UT 84037
Phone: 801.547.0393
www.jub.com

BID SET

REGISTERED PROFESSIONAL ENGINEER
97-186246-2202
BRIAN DEETER
07/10/25
STATE OF UTAH

REUSE OF DRAWINGS
J-U-B SHALL RETAIN ALL COMMON LAW, STATUTORY, COPYRIGHT AND OTHER RESERVED RIGHTS OF THESE DRAWINGS, AND THE SAME SHALL NOT BE REUSED WITHOUT J-U-B'S PRIOR WRITTEN CONSENT. ANY REUSE WITHOUT WRITTEN CONSENT BY J-U-B WILL BE AT CLIENT'S SOLE RISK AND WITHOUT LIABILITY OR LEGAL EXPOSURE TO J-U-B.

NO.	DESCRIPTION	BY	APR.	DATE
	REVISION			

CO-OP/HSBCC CANAL PRESSURIZATION PROJECT
CO-OP & HSBCC

TYPICAL FENCE DETAILS

FILE : 55-22-047_C-501X
JUB PROJ. # :55-22-047
DRAWN BY: JAS
DESIGN BY: JSF
CHECKED BY: JSF
ONE INCH
AT FULL SIZE, IF NOT ONE INCH, SCALE ACCORDINGLY
LAST UPDATED: 7/17/2025

SHEET NUMBER:
C-513

Plot Date:7/17/2025 11:26 AM Plotted By: Jon Frazier
Date Created:7/17/2025 \\JUB.COM\CENTRAL\CLIENTS\UT\COOPDITCH\PROJECTS\55-22-047_COOPDITCH2022\PIPINGPROJECT\DESIGN\CAD\SHEETS\55-22-047_C-501X.DWG

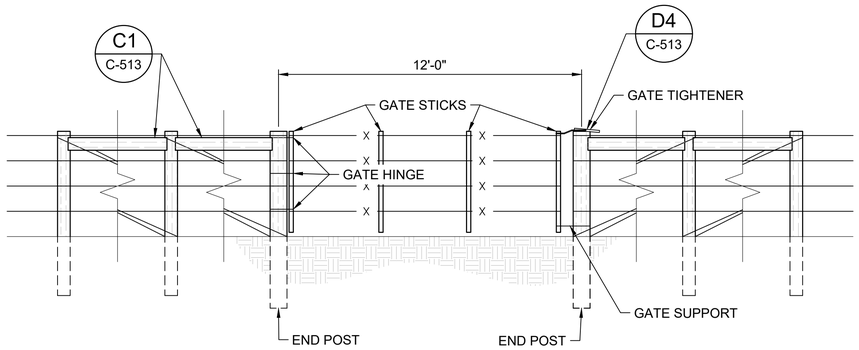

NOTES:
1. GATE STICK: PROVIDE WOOD GATE STICKS WITH A MINIMUM CROSS SECTION OF EITHER A ROUGH DIMENSION 2 in. x 2 in., 1 $\frac{1}{2}$ in. x 3 $\frac{1}{2}$ in. (NOMINAL), 2 in. x 4 in. OR 2 $\frac{1}{2}$ in. DIAMETER. EXTEND THE STICK 1 INCH BELOW BOTTOM STRAND OF WIRE AND 2 INCHES ABOVE THE TOP STRAND OF WIRE.
2. GATE HINGE: STAPLE TO GATE STICK AND TO THE END POST. USE 3 PER GATE PER (B3/C-513).
3. GATE SUPPORT: SECURE TO THE END POST LEAVING A LOOP BIG ENOUGH TO ENCOMPASS A GATE STICK.

B1 TYPICAL WIRE GATE
SCALE: 1"=3'

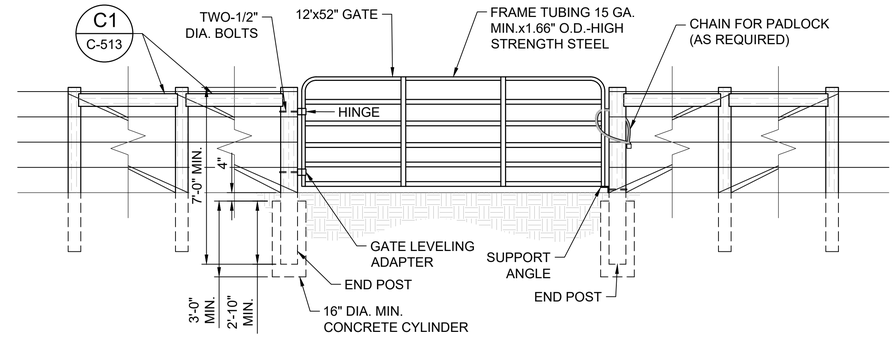

NOTES:
1. POST EMBEDMENT: IN LIEU OF ANCHORING END POSTS IN CONCRETE, EMBED A MINIMUM OF 4 FT. DEEP.
2. GATE CHAIN: WHEN REQUIRED PROVIDE 3 FT. LONG, GALVANIZED CHAINS WITH 1/4" DIA. WELDED LINKS. SECURE TO THE END POST BY WIRING OR STAPLING.
3. RAIL GATES: ALTERNATE GATES WITH HORIZONTAL RAIL, FRAME TUBING AND VERTICAL STAY SECTIONS MAY BE USED AS APPROVED BY THE ENGINEER.
4. HINGE BOLTS: USE TWO 1/2" DIA. BOLTS WITH NUTS AND WASHERS FOR EACH HINGE; BOLT LENGTH TO BE DETERMINED BY THE SIZE AND TYPE OF POST USED.
5. SUPPORT ANGLE AND BOLTS: USE TWO 1/2" DIA. BOLTS WITH NUTS AND WASHERS FOR ATTACHING EACH SUPPORT ANGLE TO THE POSTS.

B3 TYPICAL 12' RAIL GATE
SCALE: 1"=3'

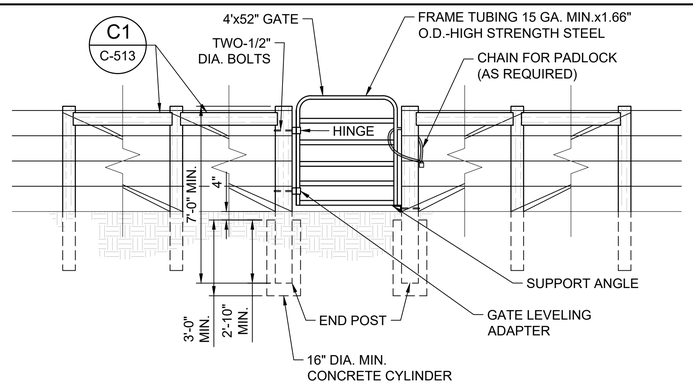

NOTES:
1. POST EMBEDMENT IN LIEU OF ANCHORING END POSTS IN CONCRETE, EMBED A MINIMUM OF 4 FT. DEEP.
2. GATE CHAIN: WHEN REQUIRED PROVIDE 3 FT. LONG, GALVANIZED CHAINS WITH 1/4" DIA. WELDED LINKS. SECURE TO THE END POST BY WIRING OR STAPLING.
3. RAIL GATES: ALTERNATE GATES WITH HORIZONTAL RAIL, FRAME TUBING AND VERTICAL STAY SECTIONS MAY BE USED AS APPROVED BY THE ENGINEER.
4. HINGE BOLTS: USE TWO 1/2" DIA. BOLTS WITH NUTS AND WASHERS FOR EACH HINGE; BOLT LENGTH TO BE DETERMINED BY THE SIZE AND TYPE OF POST USED.
5. SUPPORT ANGLE AND BOLTS: USE TWO 1/2" DIA. BOLTS WITH NUTS AND WASHERS FOR ATTACHING EACH SUPPORT ANGLE TO THE POSTS.

C1 TYPICAL 4' RAIL GATE
SCALE: 1"=3'

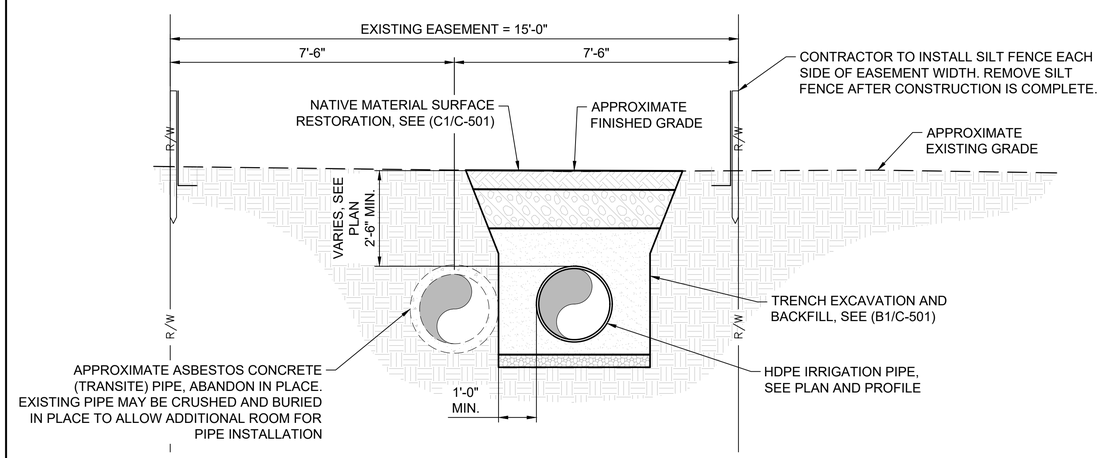

C3 TYPICAL PIPE SECTION - HDPE PIPE INSTALLED AT HANSON PROPERTY
SCALE: NOT TO SCALE

J-U-B ENGINEERS, INC.
J-U-B ENGINEERS, INC.
466 North 900 West
Kaysville, UT 84037
Phone: 801.547.0393
www.jub.com

BID SET

REGISTERED PROFESSIONAL ENGINEER
97-186246-2202
BRIAN DEETER
07/10/25
STATE OF UTAH

REUSE OF DRAWINGS
J-U-B SHALL RETAIN ALL OWNERSHIP, STATUTORY, COPYRIGHT AND OTHER RESERVED RIGHTS OF THESE DRAWINGS, AND THE SAME SHALL NOT BE REUSED WITHOUT J-U-B'S PRIOR WRITTEN CONSENT. ANY REUSE WITHOUT WRITTEN CONSENT BY J-U-B WILL BE AT CLIENTS SOLE RISK AND WITHOUT LIABILITY OR LEGAL EXPOSURE TO J-U-B.

NO.	DESCRIPTION	BY	APR.	DATE
	REVISION			

CO-OP/HSBCC CANAL PRESSURIZATION PROJECT
CO-OP & HSBCC

TYPICAL FENCE DETAILS

FILE : 55-22-047_C-501X
JUB PROJ. # :55-22-047
DRAWN BY: JAS
DESIGN BY: JSF
CHECKED BY: JSF
ONE INCH
AT FULL SIZE, IF NOT ONE INCH, SCALE ACCORDINGLY
LAST UPDATED: 7/17/2025

SHEET NUMBER:
C-514

Plot Date:7/17/2025 11:27 AM Plotted By: Jon Frazier
Date Created:7/17/2025 \\JUB.COM\CENTRAL\CLIENTS\UT\COOPDITCH\PROJECTS\55-22-047_COOPDITCH2023PIPING\PROJECT\DESIGN\CAD\SHEET\55-22-047_C-501X.DWG

LEGEND

SYMBOL	DESCRIPTION
⋈	ISOLATION VALVE
	INLET STRUCTURE
A	AIR VALVE ASSEMBLY
T	TURNOUT ASSEMBLY
M	METER
D	DRAIN ASSEMBLY

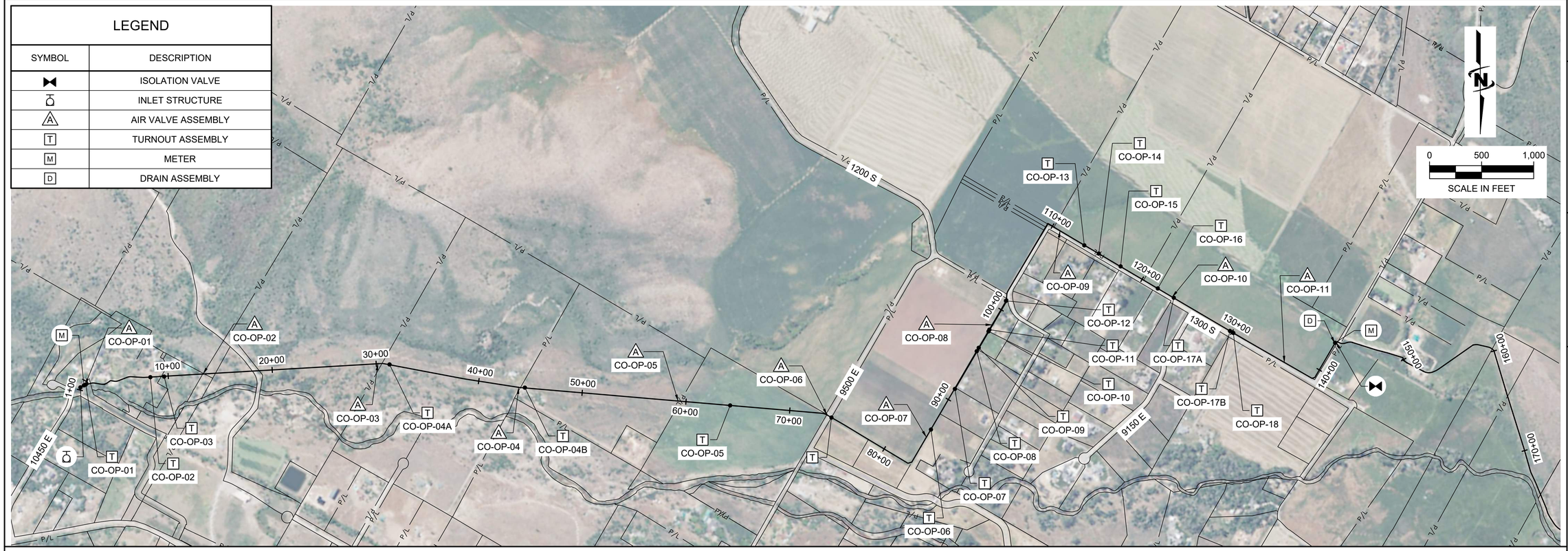

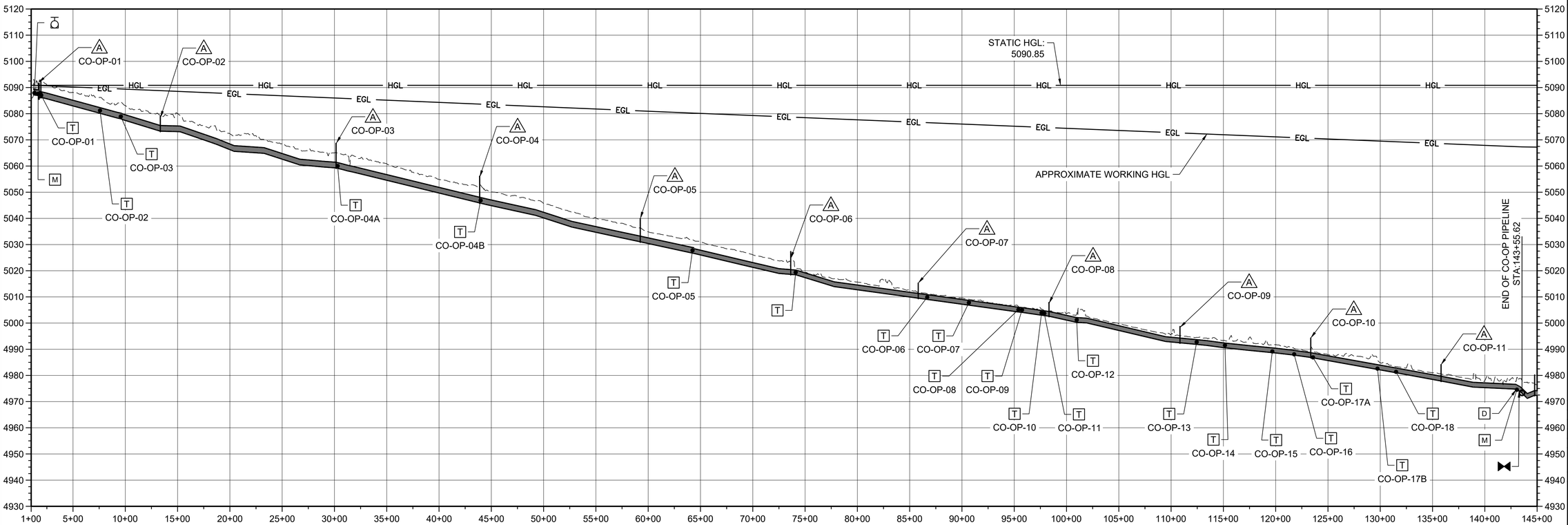

J-U-B ENGINEERS, INC.

J-U-B ENGINEERS, INC.
466 North 900 West
Kaysville, UT 84037
Phone: 801.547.0393
www.jub.com

BID SET

REGISTERED PROFESSIONAL ENGINEER
97-186246-2202
BRIAN DEETER
07/10/25
STATE OF UTAH

REUSE OF DRAWINGS
J-U-B SHALL RETAIN ALL OWNERSHIP, INCLUDING BUT NOT LIMITED TO, COPYRIGHT AND OTHER RESERVED RIGHTS OF THESE DRAWINGS, AND THE SAME SHALL NOT BE REUSED WITHOUT J-U-B'S PRIOR WRITTEN CONSENT. ANY REUSE WITHOUT WRITTEN CONSENT BY J-U-B WILL BE AT CLIENT'S SOLE RISK AND WITHOUT LIABILITY OR LEGAL EXPOSURE TO J-U-B.

NO.	DESCRIPTION	BY	APR.	DATE
	REVISION			

CO-OP/HSBCC CANAL PRESSURIZATION PROJECT
CO-OP & HSBCC

CO-OP SYSTEM MAP

FILE : 55-22-047 C-600X
JUB PROJ. # :55-22-047
DRAWN BY: JAS
DESIGN BY: JSF
CHECKED BY: JSF

ONE INCH
AT FULL SIZE, IF NOT ONE INCH, SCALE ACCORDINGLY

LAST UPDATED: 7/17/2025

SHEET NUMBER:
C-600

Plot Date:7/17/2025 11:13 AM Plotted By: Jon Frazier
Date Created:7/17/2025 \\JUB.COM\CENTRAL\CLIENTS\UT\COOPDITCH\PROJECTS\55-22-047_COOPDITCH2023PIPING\PROJECT\DESIGN\CAD\SHEET\55-22-047_C-600X.DWG

LEGEND

SYMBOL	DESCRIPTION
⋈	ISOLATION VALVE
	INLET STRUCTURE
A	AIR VALVE ASSEMBLY
T	TURNOUT ASSEMBLY
M	METER
D	DRAIN ASSEMBLY

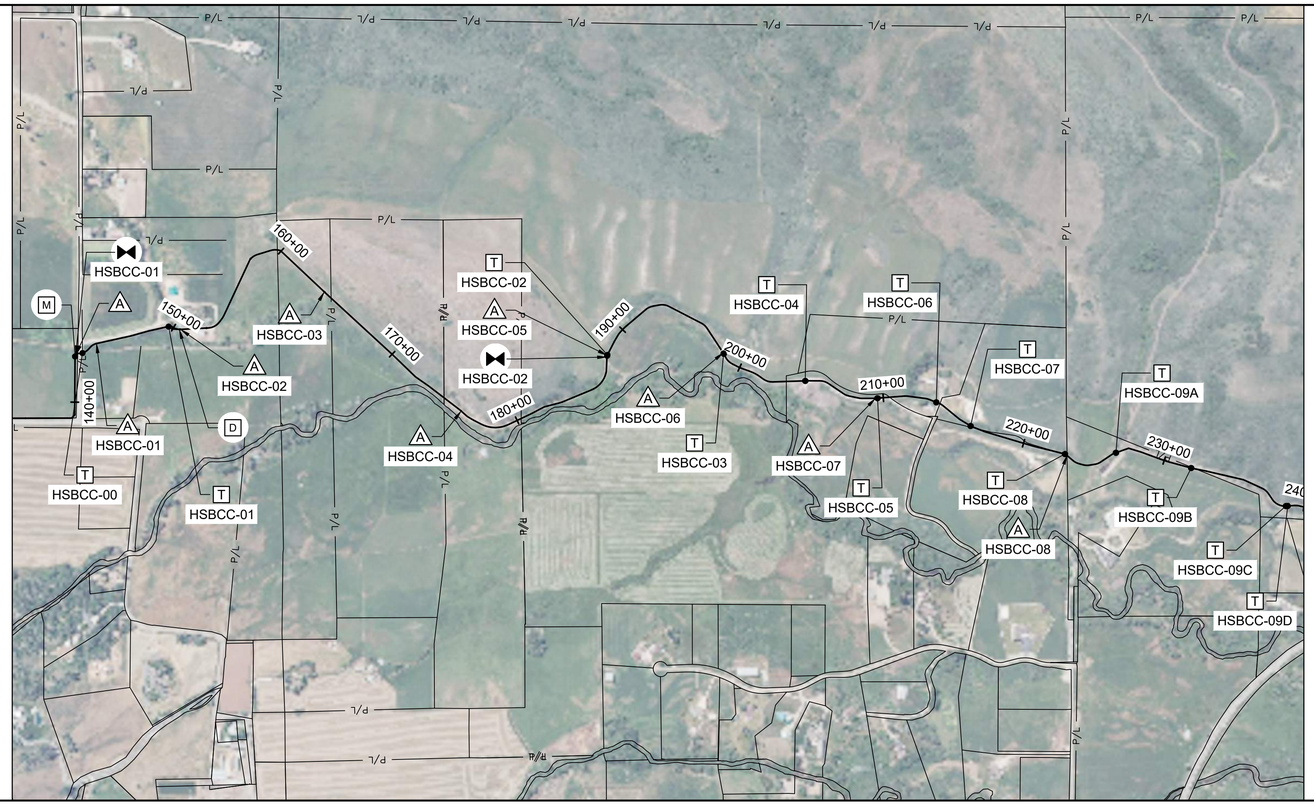

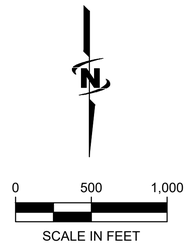

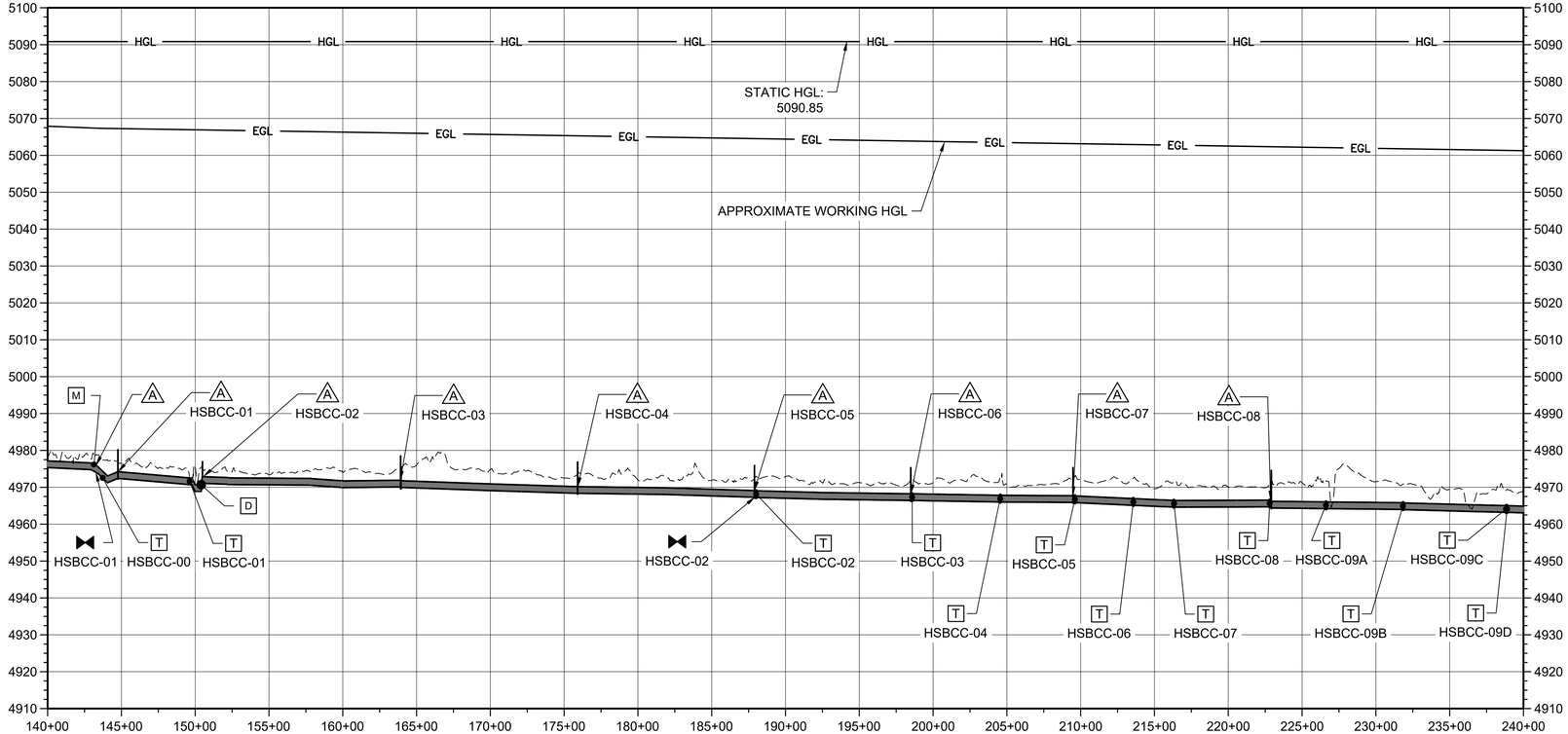

J-U-B ENGINEERS, INC.

J-U-B ENGINEERS, INC.
466 North 900 West
Kaysville, UT 84037
Phone: 801.547.0393
www.jub.com

BID SET

REGISTERED PROFESSIONAL ENGINEER
97-186246-2202
BRIAN DEETER
07/10/25
STATE OF UTAH

REUSE OF DRAWINGS
J-U-B SHALL RETAIN ALL OCCUPATIONAL, STATUTORY, COPYRIGHT AND OTHER RESERVED RIGHTS OF THESE DRAWINGS, AND THE SAME SHALL NOT BE REUSED WITHOUT J-U-B'S PRIOR WRITTEN CONSENT. ANY REUSE WITHOUT WRITTEN CONSENT BY J-U-B WILL BE AT CLIENT'S SOLE RISK AND WITHOUT LIABILITY OR LEGAL EXPOSURE TO J-U-B.

REVISION

NO.	DESCRIPTION	BY	APR.	DATE

CO-OP/HSBCC CANAL PRESSURIZATION PROJECT
CO-OP & HSBCC

HSBCC SYSTEM MAP

FILE : 55-22-047_C-600X
JUB PROJ. # :55-22-047
DRAWN BY: JAS
DESIGN BY: JSF
CHECKED BY: JSF
ONE INCH
AT FULL SIZE, IF NOT ONE INCH, SCALE ACCORDINGLY
LAST UPDATED: 7/17/2025

SHEET NUMBER:
C-601

Plot Date:7/17/2025 11:14 AM Plotted By: Jon Frazier
Date Created:7/17/2025 \\JUB.COM\CENTRAL\CLIENTS\UT\COOPDITCH\PROJECTS\55-22-047_COOPDITCH2023PIPING\PROJECT\DESIGN\CAD\SHEET\55-22-047_C-600X.DWG

LEGEND

SYMBOL	DESCRIPTION
⋈	ISOLATION VALVE
	INLET STRUCTURE
A	AIR VALVE ASSEMBLY
T	TURNOUT ASSEMBLY
M	METER
D	DRAIN ASSEMBLY

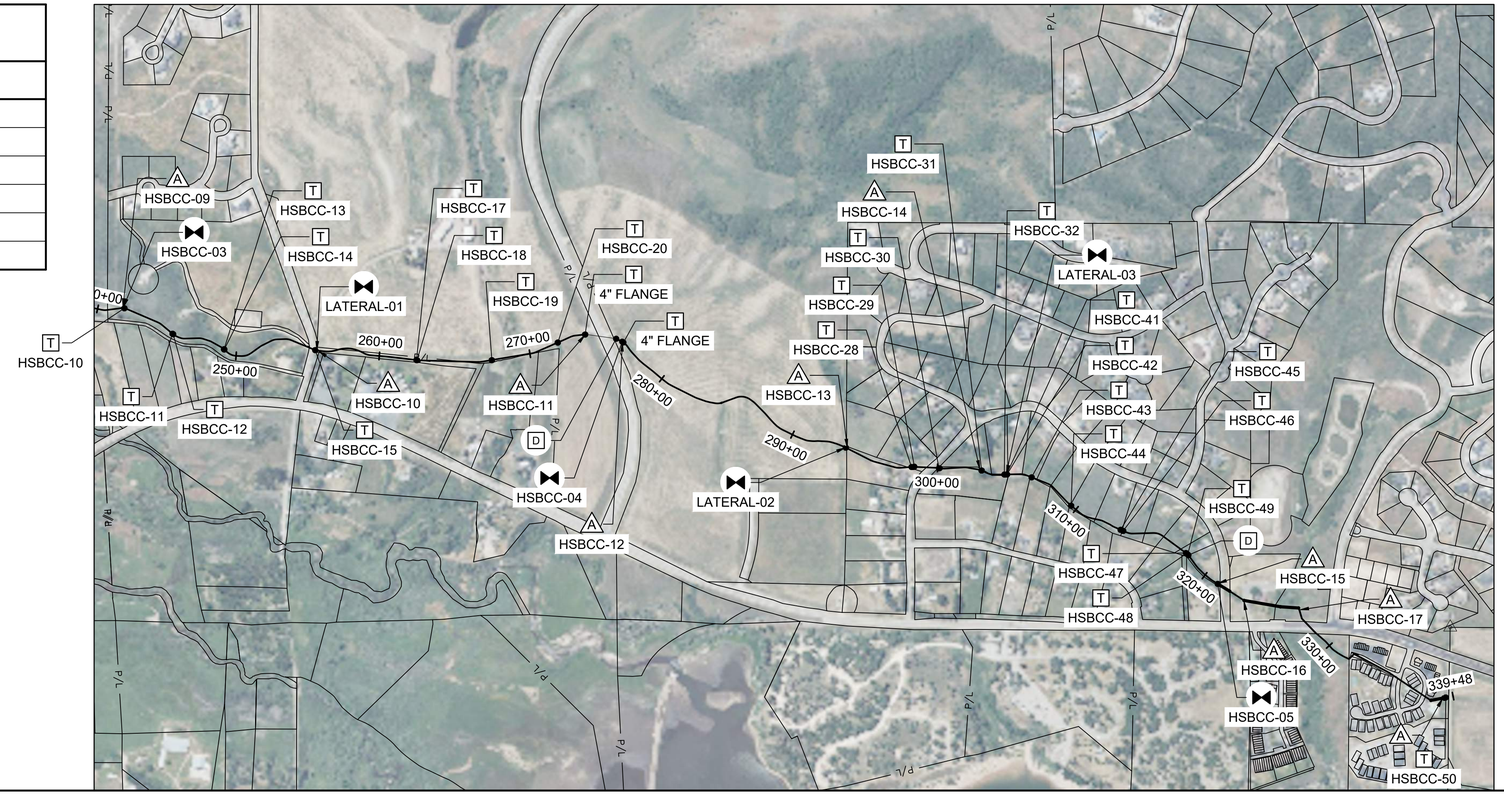

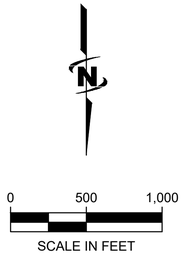

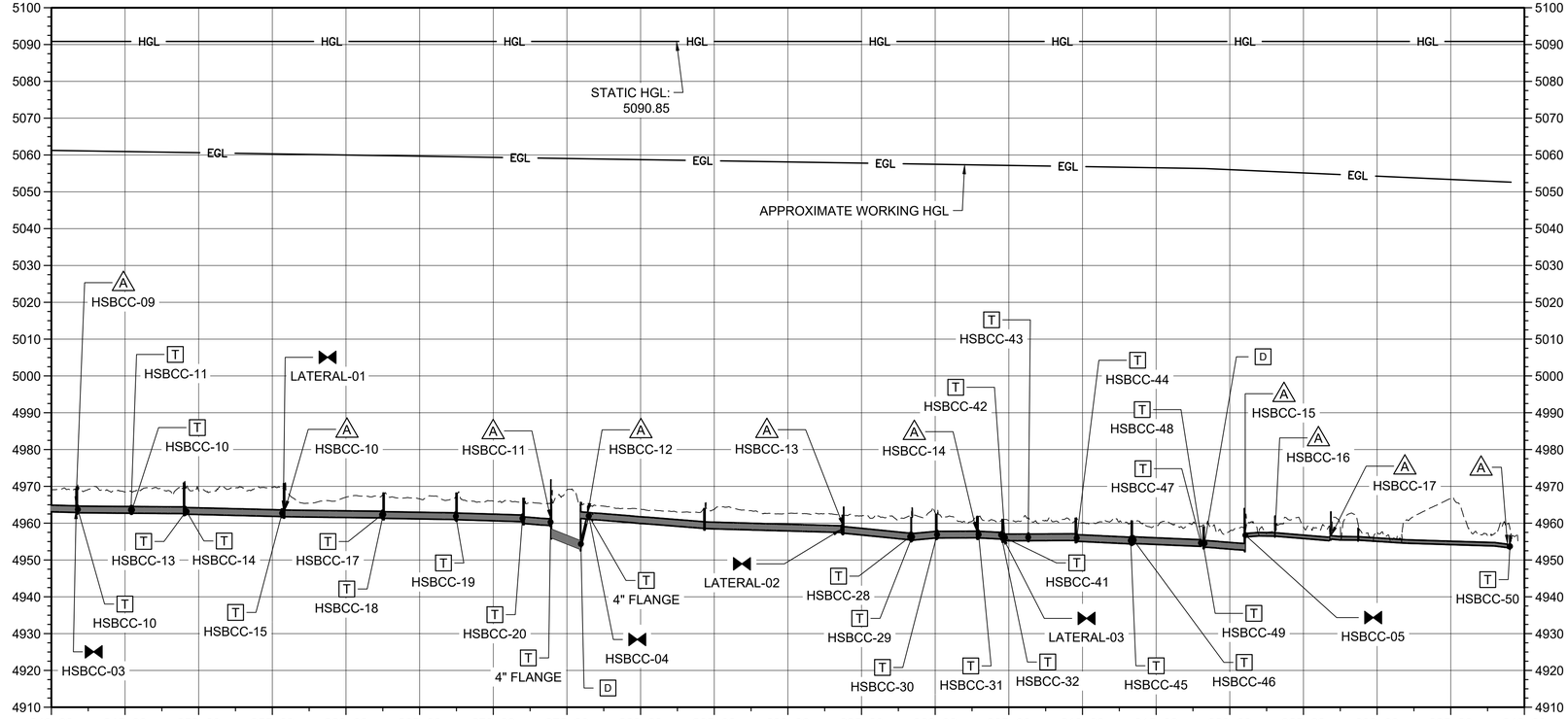

J-U-B ENGINEERS, INC.

J-U-B ENGINEERS, INC.
466 North 900 West
Kaysville, UT 84037
Phone: 801.547.0393
www.jub.com

BID SET

REGISTERED PROFESSIONAL ENGINEER
97-186246-2202
BRIAN DEETER
07/10/25
STATE OF UTAH

REUSE OF DRAWINGS
J-U-B SHALL RETAIN ALL COMMON LAW, STATUTORY, COPYRIGHT AND OTHER RESERVED RIGHTS OF THESE DRAWINGS, AND THE SAME SHALL NOT BE REUSED WITHOUT J-U-B'S PRIOR WRITTEN CONSENT. ANY REUSE WITHOUT WRITTEN CONSENT BY J-U-B WILL BE AT CLIENT'S SOLE RISK AND WITHOUT LIABILITY OR LEGAL EXPOSURE TO J-U-B.

NO.	DESCRIPTION	BY	APR.	DATE
	REVISION			

CO-OP/HSBCC CANAL PRESSURIZATION PROJECT
CO-OP & HSBCC

HSBCC SYSTEM MAP

FILE : 55-22-047_C-600X
JUB PROJ. # :55-22-047
DRAWN BY: JAS
DESIGN BY: JSF
CHECKED BY: JSF
ONE INCH
AT FULL SIZE, IF NOT ONE INCH, SCALE ACCORDINGLY
LAST UPDATED: 7/17/2025

SHEET NUMBER:
C-602

Plot Date:7/17/2025 11:15 AM Plotted By: Jon Frazier
Date Created:7/17/2025 \\JUB.COM\CENTRAL\CLIENTS\UT\COOPDITCH\PROJECTS\55-22-047_COOPDITCH\2023\PIPING\PROJECT\DESIGN\CAD\SHEET\55-22-047_C-600X.DWG

CO-OP SYSTEM DEMANDS

TURNOUT	OWNER	SHARES	SHARE FLOW (GPM)	DESIGN FLOW (GPM)	SIZE
MAIN LINE	CO-OP FARM IRRIGATION COMPANY	1,022.75	3,136	4,480	24"
CO-OP-01	TIDWELL/BOOTH/WESCHE	0	0	150	4"
CO-OP-02	HANSON	0	0	50	2"
CO-OP-03	OLSEN	0	0	50	2"
CO-OP-04A/B	RICH	40	123	195	4"
CO-OP-05	WHITE	660	2,027	2,739	16"
BLIND FLANGE	PUMPKIN 1 (LOWE)	29.75	91	195	4"
CO-OP-06	PUMPKIN 2 (BUEDER, WRIGHT, STRICKLIN, AKM, LACOOK)	28	86	250	4"
CO-OP-07	PUMPKIN 3 (BURKMAN)	3	9	50	2"
CO-OP-08	PUMPKIN 4 (RILEY)	10	31	50	2"
CO-OP-09	PUMPKIN 5 (WELCH, BURTON, WARNES, SMITH)	12	37	200	4"
CO-OP-10	PUMKIN 6 (WRIGHT)	3	9	50	2"
CO-OP-11	PUMPKIN 7 (CARLSON)	4	12	50	2"
CO-OP-12	PUMPKIN 8 (KIRKHAM, PERRRY, YOUNG, SLAMA)	22	68	200	4"
CO-OP-13	BUSICK	12	37	50	2"
CO-OP-14	GREGORY	12	37	50	2"
CO-OP-15	BERTRAM	15	46	50	4"
CO-OP-16	KUNKEL	8.5	26	50	2"
CO-OP-17A/B	HAMMOND, DEAN, THOMAS, HENNIG, JACKSON, BURT, ORTEGA, LOWE, CANGELOSI, CARPENTER, DUNKER, JOYCE, LOWE	79	243	411	6"
CO-OP-18	OLSEN, WHITCHER	84.5	260	411	6"

CO-OP NOTES:

1. CO-OP FARM IRRIGATION COMPANY IS ALLOTTED A TOTAL OF 7 CFS. THE MAINLINE WAS SIZED ASSUMING MAXIMUM FLOW OF 10 CFS.
2. DESIGN FLOW FOR AN INDIVIDUAL TURNOUT IS ASSUMED TO BE 50 GPM PER USER, OR CAPACITY OF PIPE AT VELOCITY OF 5 FPS.

HSBCC LATERAL-01

TURNOUT	OWNER	SHARES	SHARE FLOW (GPM)	DESIGN FLOW (GPM)	SIZE
HSBCC-16A	KLOMP	4	19	50	2"
HSBCC-16B	OLSON	1	5	50	2"
HSBCC-16C	WOOD	1	5	50	2"

HSBCC LATERAL-02

TURNOUT	OWNER	SHARES	SHARE FLOW (GPM)	DESIGN FLOW (GPM)	SIZE
HSBCC-21	RIDERS PROPERTIES LLC	2	9	50	2"
HSBCC-22	PORTERFIELD	1	5	50	2"
HSBCC-23	LUND	2	9	50	2"
HSBCC-24	LDS CHURCH	7	33	50	2"
HSBCC-25	TURNER	2	9	50	2"
HSBCC-26	ALLEN	3	14	50	2"
HSBCC-27	GREEN	3	14	50	2"

HSBCC LATERAL-03

TURNOUT	OWNER	SHARES	SHARE FLOW (GPM)	DESIGN FLOW (GPM)	SIZE
	HSBCC LATERAL-03				
HSBCC-33	PHILLIPS	2	9	50	2"
HSBCC-34	RAGUE	2	9	50	2"
HSBCC-35	DEUTCH	2	9	50	2"
HSBCC-36	CUTRUBUS	2	9	50	2"
HSBCC-37	HYER	2	9	50	2"
HSBCC-38	DRYSDALE	2	9	50	2"
HSBCC-39	DAVIS	2	9	50	2"
HSBCC-40	RUSSON	2	9	50	2"

HSBCC LATERAL NOTES:

1. HSBCC LATERAL PIPING AND TURNOUTS ON INDIVIDUAL LATERALS ARE NOT INCLUDED IN THE SCOPE OF THIS WORK. THIS TABLE IS INCLUDED FOR INFORMATION ONLY FOR LATERAL SIZING FROM THE HSBCC MAIN LINE PIPE.
2. DESIGN FLOW FOR AN INDIVIDUAL TURNOUT IS ASSUMED TO BE 50 GPM PER USER, OR CAPACITY OF PIPE AT VELOCITY OF 5 FPS.

HSBCC SYSTEM DEMANDS

TURNOUT	OWNER	SHARES	SHARE FLOW (GPM)	DESIGN FLOW (GPM)	SIZE
MAIN LINE	HUNTSVILLE SOUTH BENCH CANAL COMPANY	284.5	1,344	1,344	20"
HSBCC-00	NEFF	0	0	0	4"
HSBCC-01	GAUCHATT	2	9	195	4"
HSBCC-02	BUHRLEY SOUTH FORK RANCH LLC	3.5	17	50	2"
HSBCC-03	BUHRLEY	0.5	2	50	2"
HSBCC-04	BUHRLEY	0.5	2	50	2"
HSBCC-05	BUHRLEY SOUTH FORK RANCH LLC	-	-	195	4"
HSBCC-06	GRAVES	0.5	2	50	2"
HSBCC-07	BUHRLEY	0.5	2	50	2"
HSBCC-08	BUHRLEY	0.5	2	50	2"
HSBCC-09A	J&M REAL PROPERTIES	21	99	195	4"
HSBCC-09B	J&M REAL PROPERTIES	-	-	195	4"
HSBCC-09C	J&M REAL PROPERTIES	-	-	50	2"
HSBCC-09D	J&M REAL PROPERTIES	-	-	50	2"
HSBCC-10	ENGLAND	2	9	50	2"
HSBCC-11	BENNETT	2	9	50	2"
HSBCC-12	ALL WEST	2	9	50	2"
HSBCC-13	RUTLEDGE	2	9	50	2"
HSBCC-14	PITCHER	1	5	50	2"
HSBCC-15	PETERSEN	-	-	50	2"
HSBCC LATERAL-01	KLOMP, OLSON, WOOD	6	29	195	4"
HSBCC-17	SNOWBASIN	119	563	782	8"
HSBCC-18	PETERSEN	9	43	50	2"
HSBCC-19	DOMAN	4	19	195	4"
HSBCC-20	WALKER	8	38	195	4"
BLIND FLANGE	HUNTSVILLE	-	-	195	4"
BLIND FLANGE	SNOWBASIN	-	-	195	4"
HSBCC LATERAL-02	RIDERS PROPERTIES LLC, PORTERFIELD, LUND, LDS CHURCH, TURNER, ALLEN, GREEN	20	95	195	4"
HSBCC-28	SPAINHOWER	3	14	50	2"
HSBCC-29	CROMPTON	2	9	50	2"
HSBCC-30	RICE	2	9	195	4"
HSBCC-31	MOYER	2	9	50	2"
HSBCC-32	BOOTH	2	9	50	2"
HSBCC LATERAL-03	PHILLIPS, RAGUE, DEUTCH, CUTRUBUS, HYER, DRYSDALE, DAVIS, RUSSON	16	76	440	6"
HSBCC-41	VERHAAL	1	5	50	2"
HSBCC-42	HARTMAN	2	9	50	2"
HSBCC-43	HOLT	2	9	50	2"
HSBCC-44	WANGSGARD	1	5	50	2"
HSBCC-45	KRAMER	1	5	50	2"
HSBCC-46	KEYS	1	5	50	2"
HSBCC-47	GOMPERT	2	9	50	2"
HSBCC-48	CROYDEN	3	14	50	2"
HSBCC-49	LUNDELL	2	9	50	2"
HSBCC-50	JENSEN-FOWERS FARM LLC	35	166	440	6"

HSBCC NOTES:

1. HUNTSVILLE SOUTH BENCH CANAL COMPANY IS ALLOTTED A TOTAL OF 3 CFS. THE MAINLINE WAS SIZED ASSUMING MAXIMUM FLOW OF 3 CFS.
2. DESIGN FLOW FOR AN INDIVIDUAL TURNOUT IS THE CAPACITY OF THE PIPE AT A VELOCITY OF 5 FPS.
3. THE SUM OF ALL DESIGN FLOWS WILL EXCEED 3 CFS. HSBCC TO COORDINATE WITH OWNERS TO ENSURE 3 CFS IS NOT EXCEEDED.

J-U-B ENGINEERS, INC.

J-U-B ENGINEERS, INC.
466 North 900 West
Kaysville, UT 84037
Phone: 801.547.0393
www.jub.com

BID SET

REGISTERED PROFESSIONAL ENGINEER
97-186246-2202
BRIAN DEETER
07/10/25
STATE OF UTAH

REUSE OF DRAWINGS
J-U-B SHALL RETAIN ALL OWNERSHIP, POSSESSORY, COPYRIGHT AND OTHER RESERVED RIGHTS OF THESE DRAWINGS, AND THE SAME SHALL NOT BE REUSED WITHOUT J-U-B'S PRIOR WRITTEN CONSENT. ANY REUSE WITHOUT WRITTEN CONSENT BY J-U-B WILL BE AT CLIENT'S SOLE RISK AND WITHOUT LIABILITY OR LEGAL EXPOSURE TO J-U-B.

NO.	DESCRIPTION	BY	APR.	DATE
	REVISION			

CO-OP/HSBCC CANAL PRESSURIZATION PROJECT
CO-OP & HSBCC

SYSTEM DEMANDS

FILE : 55-22-047_C-600X
JUB PROJ. # :55-22-047
DRAWN BY: JAS
DESIGN BY: JSF
CHECKED BY: JSF

ONE INCH
AT FULL SIZE, IF NOT ONE INCH, SCALE ACCORDINGLY

LAST UPDATED: 7/17/2025

SHEET NUMBER:
C-603

Plot Date:7/17/2025 11:16 AM Plotted By: Jon Frazier
Date Created:7/17/2025 \\JUB.COM\CENTRAL\CLIENTS\UT\COOPDITCH\PROJECTS\55-22-047_COOPDITCH2023\PIPING\PROJECT\DESIGN\CAD\SHEETS\55-22-047_C-600X.DWG