PROVO WATER RECLAMATION FACILITY
PHASE 1 PACKAGE 2 2020 CONSTRUCTION

VOLUME 2
FOR CONSTRUCTION: PHASE 1, ELECTRICAL UPGRADES
PACKAGE D: CHLORINE BUILDING/
LOAD CENTER 4 RE-FEED

FEBRUARY 2025

PROVO CITY

MAYOR

MICHELLE KAUFUSI

CITY COUNCIL

KATRICE MACKAY
GARY GARRETT
CRAIG CHRISTENSEN
GEORGE HANDLEY
BECKY BOGDIN
TRAVIS HOBAN
RACHEL WHIPPLE

CITY STAFF

GORDON HAIGHT - PUBLIC WORKS DIRECTOR
GARY CALDER, PE - WATER RESOURCES DIRECTOR
DAVID TORGERSEN, PE - PROJECT MANAGER

DESIGN TEAM

JOHN MATTA PE, PRINCIPAL - WATER WORKS ENGINEERS
JENNY CALDERON PE, PROJECT MANAGER - WATER WORKS ENGINEERS

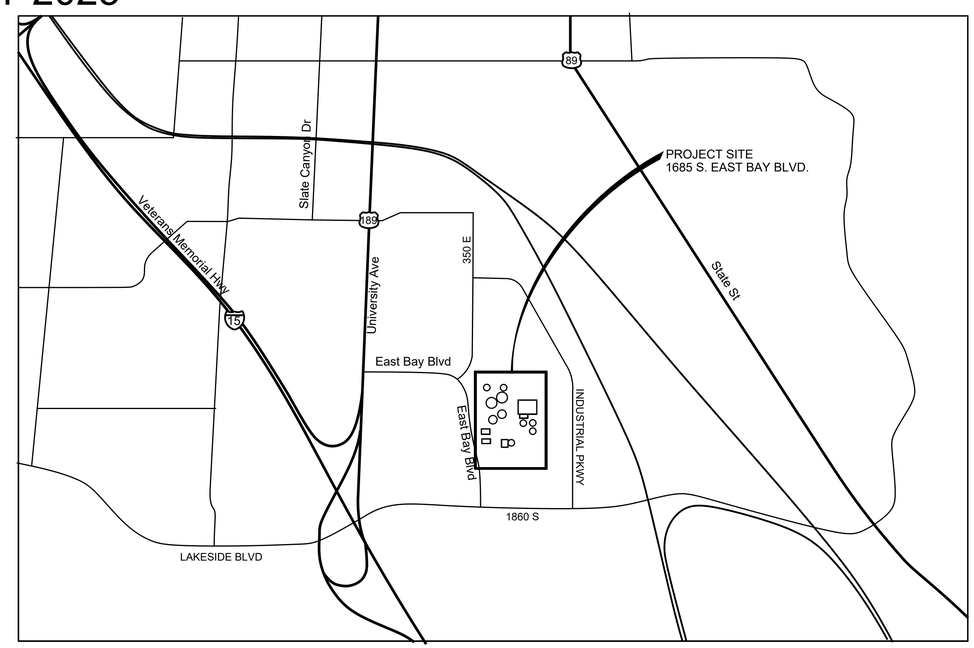

LOCATION MAP
NTS

NO.	DATE	REVISION	BY	APVD

LICENSED PROFESSIONAL ENGINEER BRIAN G. YOUNG NO.8841511 02/26/2025 STATE OF UTAH

LICENSED PROFESSIONAL ENGINEER JOHN H. MATTA 8169064-2202 02/26/2025 STATE OF UTAH

LICENSED PROFESSIONAL ENGINEER JENNIFER CALDERON 12284243-2202 02/26/2025 STATE OF UTAH

VERIFY SCALE
BAR IS ONE INCH ON ORIGINAL DRAWING.
0 1"
IF NOT ONE INCH ON THIS SHEET, ADJUST SCALES ACCORDINGLY.

DESIGN JEN
DRAWN JAM
CHECKED JEN
APPROVED JHM

WATERWORKS ENGINEERS

PROVO CITY
PUBLIC WORKS DEPT
PROVO WRF
PHASE 1, ELEC. UPGRADES
PACKAGE D - CB LC-4 RE-FEED

GENERAL
COVER SHEET

DATE FEBRUARY 2025
PROJECT NUMBER 19-002
DRAWING NUMBER G-GN-001
SHEET OF

REUSE OF DOCUMENTS: THIS DOCUMENT, AND THE IDEAS AND DESIGNS INCORPORATED HEREIN, AS AN INSTRUMENT OF PROFESSIONAL SERVICE, IS THE PROPERTY OF WATER WORKS ENGINEERS, LLC. AND IS NOT TO BE USED, IN WHOLE OR IN PART, FOR ANY OTHER PROJECT WITHOUT THE WRITTEN AUTHORIZATION OF WATER WORKS ENGINEERS, LLC.

FILENAME: W:\CAD\PROJECTS\19-002 PROVO WATRR PHASE 1_{S}\PROJECT FILES_PHASE 1 ELECTRICAL UPGRADES\07 DRAWINGS\PACKAGE D - CB LC-4 RE-FEED\PD-1902D-GN-G001.DWG PLOT DATE: February 26, 2025 PLOT TIME: 9:28 AM

SHEET NUMBER	DISCIPLINE/ DRAWING NUMBER	TITLE
	GENERAL	
1	G-GN-001	COVER SHEET
2	G-GN-002	DRAWING INDEX
3	G-GN-003	ABBREVIATIONS
4	G-GN-004	STANDARD DESIGNATIONS
	DEMOLITION	
5	D-PE-001	EXISTING PDB LOAD CENTER ONE LINE DIAGRAM
	ELECTRICAL	
6	E-GN-001	LEGEND 1
7	E-GN-002	LEGEND 2
8	E-GN-003	LEGEND 3
9	E-GN-010	PB-USG-001 MAIN UTILITY SWITCHGEAR ONE LINE DIAGRAM
10	E-GN-015	SITE SWITCHGEAR ONE LINE DIAGRAM
11	E-CB-001	LC-4 LOAD CENTER ONE LINE DIAGRAM
12	E-SE-100	SITE ELECTRICAL KEY PLAN
13	E-SE-106	SITE ELECTRICAL AREA 106 PLAN
14	E-SE-110	SITE ELECTRICAL AREA 110 PLAN
15	E-SE-114	SITE ELECTRICAL AREA 114 PLAN

NO.	DATE	REVISION	BY	APVD

LICENSED PROFESSIONAL ENGINEER
JENNIFER CALDERON
12284243-2202
02/26/2025
STATE OF UTAH

VERIFY SCALE
BAR IS ONE INCH ON ORIGINAL DRAWING.
0 1"
IF NOT ONE INCH ON THIS SHEET, ADJUST SCALES ACCORDINGLY.

DESIGN JEN
DRAWN JAM
CHECKED JEN
APPROVED JHM

WATERWORKS ENGINEERS

provo WELCOME HOME

PROVO CITY
PUBLIC WORKS DEPT
PROVO WRF
PHASE 1, ELEC. UPGRADES
PACKAGE D - CB LC-4 RE-FEED

GENERAL
DRAWINGS INDEX

DATE FEBRUARY 2025
PROJECT NUMBER 19-002
DRAWING NUMBER G-GN-002
SHEET OF

REUSE OF DOCUMENTS: THIS DOCUMENT, AND THE IDEAS AND DESIGNS INCORPORATED HEREIN, AS AN INSTRUMENT OF PROFESSIONAL SERVICE, IS THE PROPERTY OF WATER WORKS ENGINEERS, LLC. AND IS NOT TO BE USED, IN WHOLE OR IN PART, FOR ANY OTHER PROJECT WITHOUT THE WRITTEN AUTHORIZATION OF WATER WORKS ENGINEERS, LLC.

ABBREVIATIONS

@	AT
AB	ANCHOR BOLT, AGGREGATE BASE
AC	ASPHALTIC CONCRETE
ACI	AMERICAN CONCRETE INSTITUTE
ADD	ADDITIONAL
ADH AB	ADHESIVE ANCHOR BOLT
ADJ	ADJACENT, ADJUSTABLE
AFF	ABOVE FINISH FLOOR
AFG	ABOVE FINISH GRADE
AHP	AIR: HIGH PRESSURE
AIR	COMPRESSED AIR
AISC	AMERICAN INSTITUTE OF STEEL CONSTRUCTION
AL	ALUMINUM SULFATE
ALP	AIR LOW PRESSURE
ALTN	ALTERNATE
AMH	AMMONIUM HYDROXIDE
ANSI	AMERICAN NATIONAL STANDARDS INSTITUTE
APPROX	APPROXIMATE
APVD	APPROVED
APWA	AMERICAN PUBLIC WORKS ASSOCIATION
AR	AERATION
ARCH, A	ARCHITECTURAL
ARV	AIR RELEASE VALVE
ASTM	AMERICAN SOCIETY FOR TESTING AND MATERIALS
AUTO	AUTOMATIC
AUX	AUXILIARY
AV	AIR/VACUUM ASSEMBLY
AVE	AVENUE
AWG	AMERICAN WIRE GAGE
AWWA	AMERICAN WATER WORKS ASSOCIATION
AX	ANOXIC
B	BORING
BAV	BALL VALVE
BC	BEGIN CURVE, BOTTOM OF CURB
BD	BLOW DOWN
BDP	BACKDRAFT DAMPER
BF	BLIND FLANGE, BOTTOM FACE
BFD	BUTTERFLY VALVE DAMPER
BFP	BACKFLOW PREVENTER ASSEMBLY
BFV	BUTTERFLY VALVE
BLDG	BUILDING
BLM	BUREAU OF LAND MANAGEMENT
BM	BENCH MARK, BEAM
BO	BLOW OFF
BOC	BACK OF CURB
BOO	BOTTOM OF OPENING
BOG	BACK OF GUTTER
BOT	BOTTOM
BRG	BEARING
BWI	BACKWASH IN
BWO	BACKWASH OUT
BYP	BYPASS
°C	DEGREE CELSIUS
C TO C, CC	CENTER TO CENTER
C	CHANNEL (BEAM)
CAA/ARV	COMBINATION AIR ADMISSION/ AIR RELEASE VALVE
CARV	COMBINATION AIR RELEASE VALVE
CATH	CATHODIC PROTECTION
CATV	CABLE TELEVISION
CB	CATCH BASIN
CCP	CONCRETE CYLINDER PIPE
CCS	CENTRAL CONTROL SYSTEM
CE	CONDENSATE
CF	CUBIC FEET
CFM	CUBIC FEET PER MINUTE
CFS	CUBIC FEET PER SECOND
CHEM	CHEMICAL
CI	CAST IRON
CIGC	CAST IRON GROOVED COUPLING
CIMJ	CAST IRON MECHANICAL JOINT
CIP	CAST IRON PIPE
CIRJ	CAST IRON RESTRAINED JOINT
CISP	CAST IRON SOIL PIPE
CJ	CONSTRUCTION JOINT, CONTRACTION JOINT
CKV	CHECK VALVE
CL	CENTERLINE
CLDIP	CEMENT-LINED DUCTILE IRON PIPE
CLG	CEILING
CLR	CLEAR, CLEARANCE
CLSM	CONTROLLED LOW STRENGTH MATERIAL
CML, CSP	CONCRETE MORTAR LINED AND COATED STEEL PIPE
CMLSP	CEMENT MORTAR LINED STEEL PIPE
CMP	CORRUGATED METAL PIPE
CMU	CONCRETE MASONRY UNIT
CO	CLEANOUT
COL	COLUMN
COM	COMMUNICATION
COMB	COMBINED
CONC	CONCRETE
CONN	CONNECTION
CONT	CONTINUOUS, CONTINUATION
COORD	COORDINATE
CPLG	COUPLING
CTRD, CTD	CENTERED
CTR	CENTER
CU	COPPER
CU FT	CUBIC FOOT
CU IN	CUBIC INCH
CU YD	CUBIC YARD
CULV	CULVERT
CV	CHECK VALVE
CW	CIRCULATING WATER
D	PENNY
DBA	DEFORMED BAR ANCHOR
DBL	DOUBLE
DEC	DECANT
DET	DETAIL
DI	DROP INLET, DUCTILE IRON
DIA	DIAMETER
DIAG	DIAGONAL
DIL	DILUTE
DIM	DIMENSION
DIMJ	DUCTILE IRON MECHANICAL JOINT
DIP	DUCTILE IRON PIPE
DIPPL	DUCTILE IRON PIPE, POLYETHYLENE LINED
DIR	DIRECTION
DIST	DISTANCE
DN	DOWN
DO	DITTO
DR	DRAIN
DWG	DRAWING
E	EAST, ELECTRIC, ELECTRICAL
EA	EACH
EC	END CURVE
ECC	ECCENTRIC
EF	EACH FACE, EXHAUST FAN
EFL	EFFLUENT
EG	EXHAUST GAS
EJ	EXPANSION JOINT
EL	ELEVATION
ELB, ELL	ELBOW
ELC	ELECTRICAL LOAD CENTER
ELEC	ELECTRIC, ELECTRICAL
EM	EMISSION MEASUREMENT
ENGR	ENGINEER
EO	EMERGENCY OVERFLOW
EP	EDGE OF PAVEMENT
EQL SP	EQUALLY SPACED
EQPT	EQUIPMENT
ERW	EFFLUENT REUSE WATER
ESA	ENVIRONMENTALLY SENSITIVE AREA
ESC	EROSION SEDIMENT CONTROL
ESEW	EMERGENCY SHOWER/EYE WASH
EVC	END OF VERTICAL CURVE
EW	EACH WAY
EWEF	EACH WAY, EACH FACE
EXC	EXCAVATE
EXH	EXHAUST
EXP	EXPOSED, EXPANSION
EXP JT	EXPANSION JOINT
EXST	EXISTING
°F	DEGREE FAHRENHEIT
FB	FLAT BAR
FC	FLEXIBLE COUPLING
FCA	FLANGED COUPLING ADAPTER
FCO	FLOOR CLEAN OUT
FD	FLOOR DRAIN
FDA	FLOOR DRAIN W/INTEGRAL TRAP
FDN	FOUNDATION
FDV	FILTER DRAIN VALVE
FES	FLARED END SECTION
FEXT	FIRE EXTINGUISHER
FF	FINISH FLOOR
FG	FINISH GRADE, FLUE GAS
FHY	FIRE HYDRANT
FI	FLOW INDICATOR
FIG	FIGURE
FIL	FILTRATE
FL	FLOOR, FLOW LINE
FLG	FLANGE
FLH	FLAT HEAD
FLL	FLOW LINE
FLTR	FILTER
FM	FLOW METER
FNSH	FINISH
FO	FUEL OIL
FOC	FACE OF CONCRETE
FRP	FIBERGLASS REINFORCED PLASTIC
FSPS	FINE SCREEN PUMP STATION
FT	FOOT OR FEET
FTG	FOOTING
FWD	FORWARD
G	GAS
GA	GAGE
GALV	GALVANIZED
GB	GRADE BREAK
GC	GROOVED COUPLING
GCF	GROOVED COUPLING FITTING
GCO	GRADE CLEAN OUT
GD	GENERAL DRAINAGE
GE	GROOVED END
GL	GLASS
GPD	GALLONS PER DAY
GPH	GALLONS PER HOUR
GPM	GALLONS PER MINUTE
GRTG	GRATING
GSP	GALVANIZED STEEL PIPE
GT	GAS TURBINE
GV	GATE VALVE
GVL	GRAVEL
GW	GROUND WATER
HB	HOSE BIB
HD	HUB DRAIN
HDR	HEADER
HDW	HARDWARE
HF	HIGH PRESSURE FEEDWATER
HGT	HEIGHT
HM	HOLLOW METAL
HORIZ	HORIZONTAL
HP	HIGH POINT, HORSEPOWER
HPS	HIGH PRESSURE STREAM
HR	HANDRAIL
HSS	HOLLOW STRUCTURE STEEL
HV	HOSE VALVE
HWY	HIGHWAY
HYD	HYDRANT
IA	INSTRUMENT AIR
I&C	INSTRUMENTATION & CONTROL
ID	INSIDE DIAMETER
IF	INSIDE FACE
IMLR	INTERNAL MIXED LIQUOR RETURN
IN	INCH
INFL	INFLUENT
INSTM	INSTRUMENTATION
INSUL	INSULATE, INSULATION
INV	INVERT
IP	IRON PIPE
IR	IRON ROD
IW	INJECTION WATER
JT	JOINT
KIP	THOUSAND POUNDS
KW	KILOWATT
L	LEFT, ANGLE, LENGTH
LAB	LABORATORY
LAT'L	LATERAL
LB	POUNDS
LB/CU FT	POUNDS PER CUBIC FOOT
LF	LINEAR FEET
LG	LONG
LONG	LONGITUDINAL
LP	LOW POINT
LR	LONG RADIUS
LS	LOW PRESSURE STREAM
MAX	MAXIMUM
MCC	MOTOR CONTROL CENTER
MCJ	MASONRY CONTROL JOINT
MECH	MECHANICAL
MFR	MANUFACTURER
MGD	MILLION GALLONS PER DAY
MH	MANHOLE
MIN	MINIMUM, MINUTE
MISC	MISCELLANEOUS
MJ	MECHANICAL JOINT
MOV	MOTOR OPERATED VALVE
MPH	MILES PER HOUR
MSNRY	MASONRY
MSP	MILL STEEL PIPE, MANUAL OF STANDARD PRACTICE
MT	MEMBRANE TANKS
MTL	MATERIAL
MV	MUD VALVE
MW	MAKE UP WATER
MWS	MAXIMUM WATER SURFACE
N	NORTH
NC	NORMALLY CLOSED
NE	NORTHEAST
NG	NATURAL GAS
NH3	AMMONIA
NIC	NOT IN CONTRACT
NO.	NUMBER, NUMBERING
NPT	NATIONAL PIPE THREAD
NPW	NON POTABLE WATER
NTS	NOT TO SCALE
NW	NORTHWEST
OC	ON CENTER, ODOR CONTROL
OD	OUTSIDE DIAMETER, OVERFLOW DRAIN
OF	OUTSIDE FACE
OFR	OVERFLOW RETURN
OHE	OVERHEAD ELECTRIC
OMRF	ORDINARY MOMENT RESISTING FRAME
O TO O	OUT TO OUT
OP	OPERATING
OPNG	OPENING
OPP	OPPOSITE
OZ	OUNCE
PC	POINT OF CURVE
PE	PLAIN END, POLYETHYLENE OR PERMANENT EASEMENT
PENT	PENETRATION
PI	POINT OF INTERSECTION
PJF	PREMOLDED JOINT FILLER
PL	PLATE, PROPERTY LINE
PLYWD	PLYWOOD
PLV	PLUG VALVE
POB	POINT OF BEGINNING
POC	POINT OF CONNECTION
POE	POINT OF ENDING
PP, P&P	PLAN AND PROFILE, POWER POLE
PPM	PARTS PER MILLION
PRC	POINT OF REVERSE CURVE
PRCST	PRECAST
PREFAB	PREFABRICATED
PRESS	PRESSURE
PRI	PRIMARY
PROP	PROPERTY
PRV	PRESSURE RELEASE VALVE
PS	PUMP STATION
PSF	POUNDS PER SQUARE FOOT
PSI	POUNDS PER SQUARE INCH
PSIG	POUNDS PER SQUARE INCH, GAUGE
PT	POINT OF TANGENCY
P.U.E.	PUBLIC UTILITY EASEMENT
PV	PLUG VALVE
PVC	POLYVINYL CHLORIDE PLASTIC \ POINT OF VERTICAL CURVE
PVCGS	POLYVINYL CHLORIDE PLASTIC-GRAVITY SEWER TYPE
PVCW	POLYVINYL CHLORIDE PLASTIC-WATER DISTRIBUTION SERVICE TYPE
PVI	POINT OF VERTICAL INTERSECTION
PVMT	PAVEMENT
PVT	POINT OF VERTICAL TANGENCY, PRIVATE
R, RAD	RADIUS
RC	REINFORCED CONCRETE
RCP	REINFORCED CONCRETE PIPE
RD	ROAD, ROOF DRAIN
RDCR	REDUCER
REF	REFER OR REFERENCE
REINF	REINFORCED, REINFORCING, REINFORCE
REQD	REQUIRED
RJ	RESTRAINED JOINT
RLS	RUBBER LINED STEEL
RM	ROOM
RMJ	RESTRAINED MECHANICAL JOINT
RNG	RENEWABLE NATURAL GAS
RO	ROUGH OPENING OR REVERSE OSMOSIS
RP	RADIUS POINT
R/R	REMOVE AND REPLACE
RST	REINFORCING STEEL
RT	RIGHT
RTN	RETURN WATER
RV	ROOF VENT
RW	RAW WATER
R/W	RIGHT-OF-WAY
S	I-BEAM, SOUTH, SLOPE
S =	SLOPE EQUALS
SA	SERVICE AIR
SAT	SUSPENDED ACOUSTIC TILE
SCFH	STANDARD CUBIC FEET PER HOUR
SCFM	STANDARD CUBIC FEET PER MINUTE
SCH	SCHEDULE
SE	SOUTHEAST
SEC	SECONDARY
SECT	SECTION
SH	SHEET
SHC	SODIUM HYPOCHLORITE
SLD	SLUDGE
SLG	SLIDE GATE
SLP	SLOPE
SMP	SAMPLE
SOLN	SOLUTION
SP	SPACE OR SPACES
SPD	SUMP PUMP DRAIN
SPEC	SPECIFICATIONS
SPLY	SUPPLY
SQ	SQUARE
SQ FT	SQUARE FOOT
SQ IN	SQUARE INCH
	SAMPLING SYSTEM
SSH	SAFETY SHOWER
SST	STAINLESS STEEL
ST	SAMPLE TAP
STA	STATION
STD	STANDARD
STIF	STIFFENER
STL	STEEL, STEEL PIPE
STLS	STEEL PIPE (SPECIAL)
STR	STRAIGHT
STRL	STRUCTURAL
STRUCT	STRUCTURE
SUBFL	SUBFLOOR
SUSP	SUSPEND
SW	SERVICE WATER, SOUTHWEST
SYMM	SYMMETRICAL
T	TANGENT, TELEPHONE LINE, TOP
t, T	THICKNESS
T&B	TOP AND BOTTOM
T&G	TONGUE AND GROOVE
TBG	TUBING
TC	TOP OF CONCRETE
TCE	TEMPORARY CONSTRUCTION EASEMENT
TDH	TOTAL DYNAMIC HEAD
TECH	TECHNICAL
TEL	TELEPHONE
TEMP	TEMPORARY, TEMPERATURE
TF	TOP FACE
THD	THREAD
THK	THICK
TNK	TANK
TOB	TOP OF BAFFLE
TOC	TOP OF CURB
TG	TOP OF GRATING
TOW	TOP OF WALL
TP	TURNING POINT, TEST PIT
TRANS	TRANSITION
TRANSV	TRANSVERSE
TS	TUBE STEEL
TST	TOP OF STEEL
TT	THRUST TIE
TW	TREATED GROUND WATER
TWS	TRACER WIRE STATION
TYP	TYPICAL
UBC	UNIFORM BUILDING CODE
UD	UNDERDRAIN
UG	UNDERGROUND
UH	UNIT HEATER
UNK	UNKNOWN
UNO	UNLESS NOTED OTHERWISE
V	VENT, VOLT, VALVE
VAC	VACUUM
VDP	VOLUME DAMPER
VAR	VENT ACID RESISTANT
VC	VERTICAL CURVE
VERT	VERTICAL
VM	VM VALVE MODULE
VPI	VERTICAL POINT OF INTERSECTION
VPS	VENEER PLASTER SYSTEM
VTR	VENT THRU ROOF
W/	WITH
W	WIDE FLANGE (BEAM), WEST, WATER
WATRR	WATER ADVANCED TREATMENT AND RESOURCE RECOVERY
WC	WATER CLOSET
WD	WOOD
WM	WATER METER
WR	WATER RESISTANT
WS	WATER SURFACE, WATER STOP
W SH ST	WEATHERING SHEET STEEL
WSP	WELDED STEEL PIPE
WT	WATER TIGHT
WTR	WATER
WW	WASHWATER OR WASTEWATER
WWF	WELDED WIRE FABRIC
YD	YARD
YH	YARD HYDRANT

NO.	DATE	REVISION	BY	APVD

LICENSED PROFESSIONAL ENGINEER
JENNIFER CALDERON
12284243-2202
02/26/2025
STATE OF UTAH

VERIFY SCALE
BAR IS ONE INCH ON ORIGINAL DRAWING.
0 1"
IF NOT ONE INCH ON THIS SHEET, ADJUST SCALES ACCORDINGLY.

DESIGN JEN
DRAWN JAM
CHECKED JEN
APPROVED JHM

WATERWORKS ENGINEERS

provo WELCOME HOME

PROVO CITY
PUBLIC WORKS DEPT
PROVO WRF
PHASE 1, ELEC. UPGRADES
PACKAGE D - CB LC-4 RE-FEED

GENERAL
ABBREVIATIONS

DATE FEBRUARY 2025
PROJECT NUMBER 19-002
DRAWING NUMBER G-GN-003
SHEET OF

REUSE OF DOCUMENTS: THIS DOCUMENT, AND THE IDEAS AND DESIGNS INCORPORATED HEREIN, AS AN INSTRUMENT OF PROFESSIONAL SERVICE, IS THE PROPERTY OF WATER WORKS ENGINEERS, LLC. AND IS NOT TO BE USED, IN WHOLE OR IN PART, FOR ANY OTHER PROJECT WITHOUT THE WRITTEN AUTHORIZATION OF WATER WORKS ENGINEERS, LLC.

DRAWING NUMBER

DISCIPLINE — M-BC-101 — DRAWING SERIES NUMBER; FACILITY DESIGNATION

DISCIPLINE

LETTER	DISCIPLINE
G	GENERAL
D	DEMOLITION
C	CIVIL
A	ARCHITECTURAL
S	STRUCTURAL
M	MECHANICAL
H	HEATING, VENTILATION AND COOLING
P	PLUMBING
E	ELECTRICAL
N	INSTRUMENTATION

FACILITY DESIGNATION

FACILITY	AREA
GENERAL	GN
CIVIL GRADING AND DRAINAGE	CD
YARD PIPING	YP
SITE ELECTRICAL	SE
EXISTING HEADWORKS	HW
EXISTING INFLUENT PUMP STATION	IP
EXISTING PRIMARY CLARIFIERS	EC
EXISTING PRIMARY SLUDGE PUMP STATION NO. 1	S1
EXISTING PRIMARY SLUDGE PUMP STATION NO. 2	S2
COARSE SCREENS & GRIT	CG
PRIMARY CLARIFIERS	PC
PRIMARY SLUDGE PUMP STATION	P1
EXISTING AERATION BASINS (AB)	EA
BIOREACTOR COMPLEX (INCLUDES THE FOLLOWING SUB-AREAS)	BC
FINE SCREEN PUMP STATION	FP
FINE SCREENS BUILDING	FS
BIOREACTORS	BR
MEMBRANE BUILDING	MB
EXISTING BLOWER BUILDING	EB
BLOWER BUILDING	BL
ODOR CONTROL BIOFILTER	OC
EQUALIZATION AND SURGE BASINS	EQ
EXISTING CHLORINE BUILDING	CB
EXISTING FILTER BUILDING	FB
EXISTING UV BUILDING	UV
PLANT LIFT STATION	LS
EXISTING PRIMARY DIGESTERS	1D
WASTE GAS BURNER	GS
EXISTING DAF THICKENER	DT
EXISTING SECONDARY DIGESTERS	2D
EXISTING SECONDARY SLUDGE PUMP STATION	P2
EXISTING DEWATERING BUILDING	DB
STRUVITE CONTROL	ST
POWER DISTRIBUTION BUILDING	PB
EXISTING POWER DISTRIBUTION BUILDING	PE
STANDBY GENERATORS	SG
NORTH LOAD CENTER BUILDING	L1
OPERATIONS BUILDING	OP
MAINTENANCE BUILDING	MN

DRAWING SERIES

NUMBER SERIES	DRAWING TYPE
000	GENERAL
100	PLANS
200	SECTIONS
300	DETAILS
400	ELEVATIONS/ISOMETRICS
500	SCHEMATICS
600	SCHEDULES AND P&IDs
700	DEMOLITION ELEVATIONS
800	POINT TABLES
900	NOT USED

NO.	DATE	REVISION	BY	APVD

PROCESS IDENTIFICATION

PROCESS	AREA
PLANT LIFT STATION	09
COARSE SCREENS AND COARSE SCREENINGS HANDLING	10
GRIT REMOVAL AND GRIT PUMPS	11
GRIT WASHER/CLASSIFIER	12
FINE SCREEN PUMP STATION	13
EQUALIZATION AND SURGE	14
COMPRESSED AIR MIXING SYSTEM-EQUALIZATION	15
PRIMARY CLARIFIER 1	20
PRIMARY CLARIFIER 2	21
PRIMARY SLUDGE PUMP STATION 1	22
PRIMARY SLUDGE PUMP STATION 2	23
PRIMARY SCUM PUMPS	24
PRIMARY SLUDGE THICKENER 1 (FUTURE)	25
PRIMARY SLUDGE THICKENER 2 (FUTURE)	26
THICKENER DECANT PUMP STATION (FUTURE)	27
THICKENED SLUDGE PUMP STATION (FUTURE)	28
FINE SCREENS, FINE SCREENINGS HANDLING AND ODOR CONTROL	29
BIOREACTOR VALVE GALLERY A – BIOREACTORS 1 AND 2	30
BIOREACTOR VALVE GALLERY B – BIOREACTORS 3 AND 4 (FUTURE)	31
BIOREACTOR VALVE GALLERY C – BIOREACTORS 5 AND 6 (FUTURE)	32
BIOREACTOR 1	33
BIOREACTOR 2	34
BIOREACTOR 3 (FUTURE)	35
BIOREACTOR 4 (FUTURE)	36
BIOREACTOR 5 (FUTURE)	37
BIOREACTOR 6 (FUTURE)	38
PROCESS AIR BLOWERS	39
MIXED LIQUOR CHANNEL	40
RAS CHANNEL, RAS PUMPS, AND DO DEPLETION CHANNELS	41
BASIN DRAIN PUMP STATION	42
MEMBRANE TANK 1	43
MEMBRANE TANK 2	44
MEMBRANE TANK 3	45
MEMBRANE TANK 4	46
MEMBRANE TANK 5	47
MEMBRANE TANK 6	48
MEMBRANE TANK 7	49
MEMBRANE TANK 8	50
MEMBRANE TANK 9 (FUTURE)	51
MEMBRANE TANK 10 (FUTURE)	52
MEMBRANE TANK 11 (FUTURE)	53
MEMBRANE TANK 12 (FUTURE)	54
PERMEATE WEIR BOX	55
COMPRESSED AIR MIXING SYSTEM - BIOREACTORS	56
WAS PUMP STATION – MEMBRANE TANKS 1 - 8	57
WAS PUMP STATION – MEMBRANE TANKS 9 – 12 (FUTURE)	58
PLANT COMPRESSED AIR SYSTEM	59
AIR SCOUR BLOWERS	60
MEMBRANE BACKPULSE PUMPS	61
COMPRESSED AIR SYSTEM - MEMBRANES	62
SODIUM HYPOCHLORITE STORAGE AND FEED	63
CITRIC ACID STORAGE AND FEED	64
ALUM STORAGE AND FEED	65
UV DISINFECTION SYSTEM	67
IMPURE WATER PUMP STATION	68
PLANT DRAIN SYSTEM	69
ANAEROBIC DIGESTER CONTROL SYSTEM	70
ANAEROBIC DIGESTER 1	71
ANAEROBIC DIGESTER 2	72
RNG PROCESSING (FUTURE)	73
WASTE GAS BURNER	74
STRUVITE CONTROL - AERATED SLUDGE SYSTEM	75
DAF THICKENER	80
DAF SYSTEM	81
SECONDARY DIGESTER 1	82
SECONDARY DIGESTER 2	83
SECONDARY DIGESTER TRANSFER/CENTRIFUGE FEED PUMPS	84
DEWATERING	90
CENTRIFUGES AND DEWATERED SOLIDS CONVEYORS	91
POLYMER STORAGE AND FEED	92
TRUCK LOADING SYSTEM	93
CENTRATE EQUALIZATION SYSTEM	94

FLOW STREAM ID LEGEND

ID	FLOWSTREAM	ID	FLOWSTREAM
AF	ANTI-FOAMING AGENT	MLR	MIXED LIQUOR RETURN
ALUM	ALUMINUM SULFATE	ML	MIXED LIQUOR
AS	AIR SCOUR	NG	NATURAL GAS
BD	BASIN DRAIN	NGH	HIGH PRESSURE NATURAL GAS
BP	MEMBRANE BACKPULSE	NGL	LOW PRESSURE NATURAL GAS
BYP	BYPASS	NPW	NON POTABLE WATER
CA	COMPRESSED AIR	OF	OVERFLOW
CEN	CENTRATE	PA	PROCESS AIR
CIPS	CLEAN IN PLACE SOLUTION	PD	PLANT DRAIN
CIT	CITRIC ACID	PE	PRIMARY EFFLUENT
CK	SLUDGE CAKE	PI	PRIMARY INFLUENT
CW	COLD WATER	PRM	PERMEATE
DAFI	DAF INFLUENT	POL	POLYMER
DAFR	DAF RECYCLE	PS	PRIMARY SLUDGE
DAFU	DAF UNDERFLOW	PW	POTABLE WATER
DEC	DECANT	RAS	RETURN ACTIVATED SLUDGE
DG	DIGESTER GAS	RF	RETURN FLOW
DR	DRAIN	SA	SAMPLE
DSL	DIGESTED SLUDGE	SC	SCUM
EQ	EQUALIZATION	SHC	SODIUM HYPOCHLORITE
EQR	EQUALIZATION BASIN RETURN	SCR	SCREENINGS
FA	FOUL AIR	SD	STORM DRAIN
FO	FOAM	SL	SAMPLE LINE
FE	FINAL EFFLUENT	SPD	SUMP DISCHARGE
GTO	GRAVITY THICKENER OVER FLOW	SPE	SCREENED PRIMARY EFFLUENT
GRT	GRIT	SPS	STRUVITE PRECIPIATED SLUDGE
HPA	HIGH PRESSURE AIR	SS	SANITARY SEWER
HW	HOT WATER	SW	SEAL WATER
INF	INFLUENT	TG	TAIL GAS
IPW	IMPURE WATER	TSL	THICKENED SLUDGE
IRR	IRRIGATION	V	DRAIN VENT
LUB	LUBRICATION	WAS	WASTE ACTIVATED SLUDGE
MGCL2	MAGNESIUM CHLORIDE		

SECTION

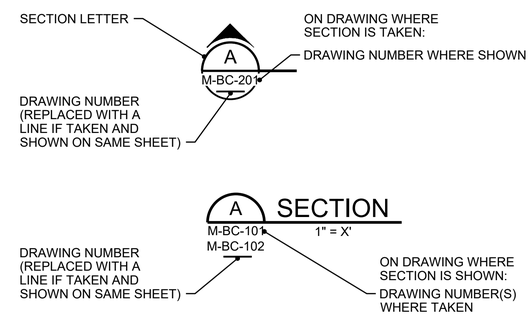

DETAIL

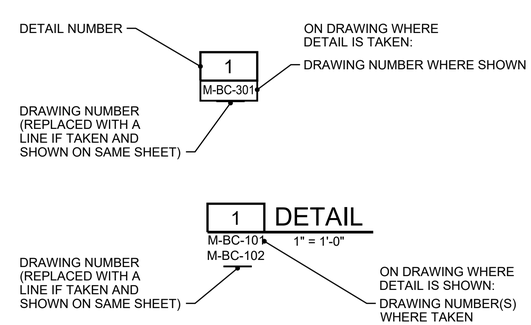

STANDARD DETAIL

AS SHOWN ON DRAWING: 12345 — DETAIL NUMBER

AS SHOWN ON STANDARD DETAIL: 12345

NOTES:

1. STANDARD DETAIL CALLOUTS ARE SHOWN TO INDICATE DETAIL REQUIRED AT SPECIFIC LOCATIONS. DETAILS ARE NOT CALLED OUT AT ALL LOCATIONS. WHERE A STANDARD DETAIL CALLOUT IS NOT SHOWN, THE CONTRACTOR SHALL USE THE STANDARD DETAIL MOST APPLICABLE AND CONSISTENT WITH OTHER WORK UNDER THIS CONTRACT.

UNIQUE VALVE AND OPERATOR

P08-BFV-XXX

NEW PLANT DESIGNATION — PROCESS DESIGNATION — UNIQUE NUMBER — VALVE TYPE

EQUIPMENT DESIGNATION

P08-P-101

NEW PLANT DESIGNATION — PROCESS DESIGNATION — EQUIPMENT TYPE — UNIQUE NUMBER

LINE TYPE APPEARANCE

———	BLACK	NEW 'ON' DISCIPLINE
———	LIGHT OR MEDIUM GRAY OR SCREENED	EXISTING 'ON' OR 'OFF' DISCIPLINE
———	DARK GRAY	NEW 'OFF' DISCIPLINE
———	FUTURE	FUTURE 'ON' DISCIPLINE

GENERAL SYMBOLOGY

STRUCTURE OR EQUIPMENT TO BE REMOVED OR DEMOLISHED

LICENSED PROFESSIONAL ENGINEER — JENNIFER CALDERON — 12284243-2202 — 02/26/2025 — STATE OF UTAH

VERIFY SCALE: BAR IS ONE INCH ON ORIGINAL DRAWING. 0 — 1". IF NOT ONE INCH ON THIS SHEET, ADJUST SCALES ACCORDINGLY.

DESIGN JEN | DRAWN JAM | CHECKED JEN | APPROVED JHM

WATERWORKS ENGINEERS

provo WELCOME HOME

PROVO CITY
PUBLIC WORKS DEPT
PROVO WRF
PHASE 1, ELEC. UPGRADES
PACKAGE D - CB LC-4 RE-FEED

GENERAL

STANDARD DESIGNATIONS

DATE: FEBRUARY 2025
PROJECT NUMBER: 19-002
DRAWING NUMBER: G-GN-004
SHEET OF

REUSE OF DOCUMENTS: THIS DOCUMENT, AND THE IDEAS AND DESIGNS INCORPORATED HEREIN, AS AN INSTRUMENT OF PROFESSIONAL SERVICE, IS THE PROPERTY OF WATER WORKS ENGINEERS, LLC. AND IS NOT TO BE USED, IN WHOLE OR IN PART, FOR ANY OTHER PROJECT WITHOUT THE WRITTEN AUTHORIZATION OF WATER WORKS ENGINEERS, LLC.

DEMOLITION NOTES:

1. DEMOLISH OBSOLETE EQUIPMENT AFTER THE NEW ELECTRICAL DISTRIBUTION SYSTEM HAS BEEN COMMISSIONED. EXISTING FACILITIES MUST REMAIN IN OPERATION THROUGHOUT CONSTRUCTION PER OWNER REQUIREMENTS. PROVIDE TEMPORARY EQUIPMENT AND POWER AS REQUIRED. COORDINATE WITH OWNER.

INDICATES EQUIPMENT TO BE DEMOLISHED

SCOPE OF WORK KEY NOTES:

B PACKAGE B - IP LC-1 AND DB RE-FEEDS

D PACKAGE D - CB LC-4 RE-FEED

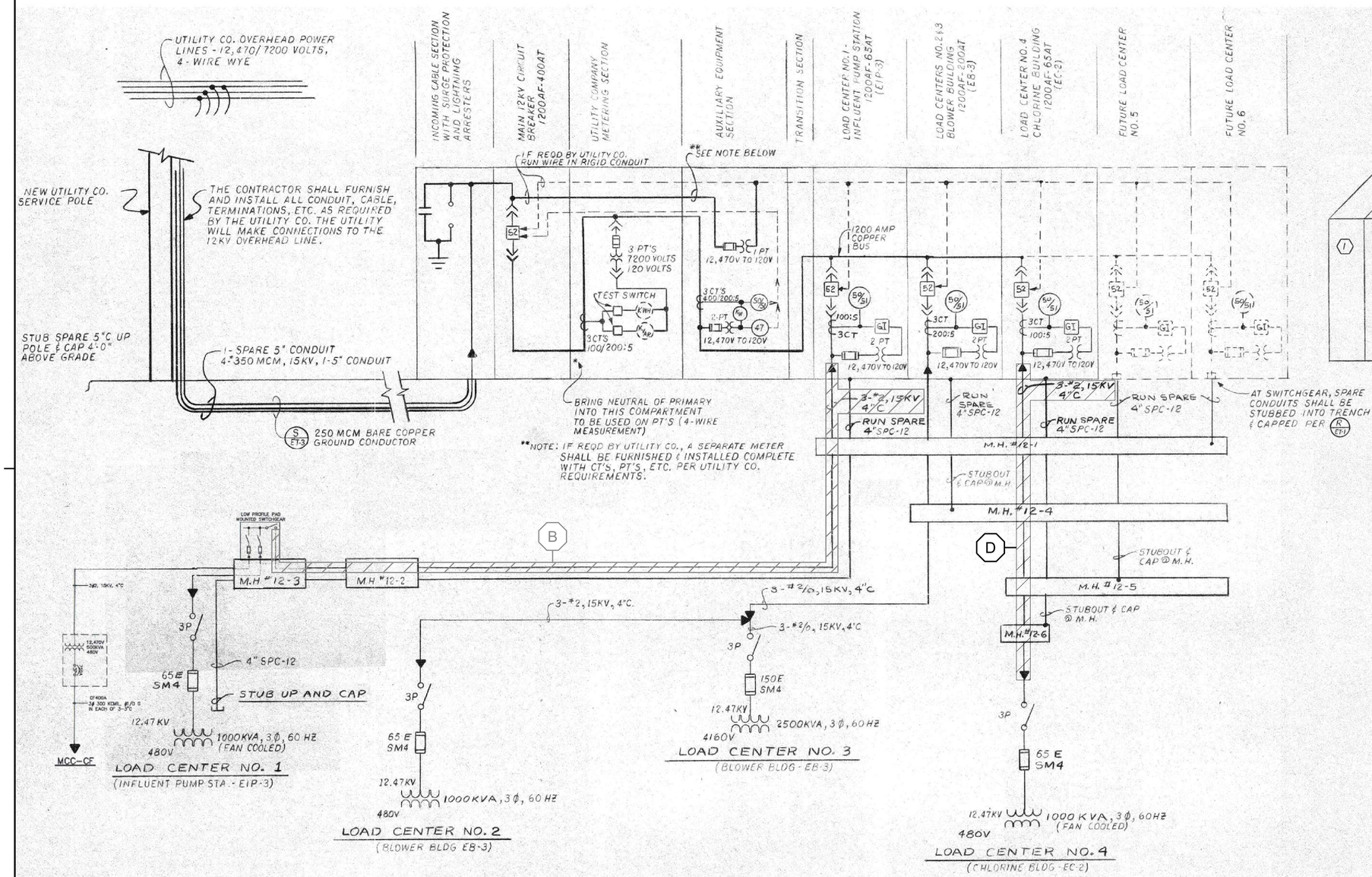

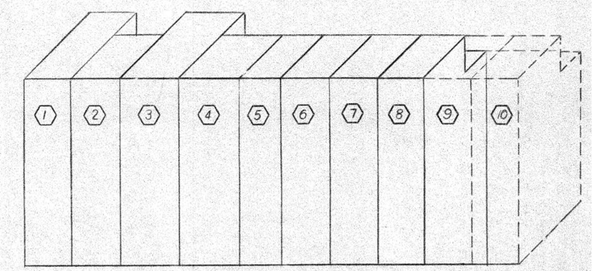

A ELEVATION ~ 12KV SWITCHGEAR
EG-6
NOT TO SCALE

NAMEPLATES

1. INCOMING CABLE/BUS TRANSITION
2. MAIN BREAKER
3. PROVO CITY POWER METERING
4. AUXILIARY EQUIPMENT
5. TRANSITION
6. LOAD CENTER NO.1-INFLUENT PUMP STATION
7. LOAD CENTERS NO. 2 & NO. 3 - BLOWER BUILDING
8. LOAD CENTER NO. 4 - CHLORINE BUILDING
9. LOAD CENTER - (FUTURE)
10. LOAD CENTER - (FUTURE)

NOTES:
1. THE CONTRACTOR SHALL VERIFY SIZE, NUMBER, TYPE AND LOCATION OF ALL ITEMS WITH THE ENGINEER AND WITH PROVO CITY POWER CO. SLIGHT CHANGES REQUESTED BY PROVO CITY POWER CO. SHALL BE MADE WITHOUT ANY ADDITIONAL EXPENSE TO THE OWNER.

1 EXISTING PDB LOAD CENTER ONE LINE DIAGRAM
- SCALE: NONE

NO.	DATE	REVISION	BY	APVD

VERIFY SCALE
BAR IS ONE INCH ON ORIGINAL DRAWING.
0 1"
IF NOT ONE INCH ON THIS SHEET, ADJUST SCALES ACCORDINGLY.

DESIGN TCA
DRAWN TCA
CHECKED BGY
APPROVED JHM

WATERWORKS ENGINEERS

provo WELCOME HOME

PROVO CITY
PUBLIC WORKS DEPT
PROVO WRF
PHASE 1, ELEC. UPGRADES
PACKAGE D - CB LC-4 RE-FEED

DEMOLITION
EXISTING PDB
LOAD CENTER
ONE LINE DIAGRAM

LICENSED PROFESSIONAL ENGINEER
BRIAN G. YOUNG
NO.8841511
02/26/2025
STATE OF UTAH

DATE FEBRUARY 2025
PROJECT NUMBER 19-002
DRAWING NUMBER D-PE-001
SHEET OF

REUSE OF DOCUMENTS: THIS DOCUMENT, AND THE IDEAS AND DESIGNS INCORPORATED HEREIN, AS AN INSTRUMENT OF PROFESSIONAL SERVICE, IS THE PROPERTY OF WATER WORKS ENGINEERS, LLC. AND IS NOT TO BE USED, IN WHOLE OR IN PART, FOR ANY OTHER PROJECT WITHOUT THE WRITTEN AUTHORIZATION OF WATER WORKS ENGINEERS, LLC.

SINGLE LINE & CONTROL DIAGRAM SYMBOLS

PUSH BUTTONS

NORMALLY OPEN (NO)	NORMALLY CLOSED (NC)	DESCRIPTION:
PB##	PB##	EMERGENCY STOP PUSH BUTTON WITH RED MUSHROOM HEAD OPERATOR (MAINTAINED CONTACT)
PB##	PB##	PUSH BUTTON, MOMENTARY CONTACT, SPRING RETURN
SSPB##		START/STOP PUSH BUTTON CONTROL STATION, MAINTAINED CONTACT WITH LOCKOUT DEVICE ON STOP

PILOT LIGHTS

PLT## CLR FCN — PUSH TO TEST, 110V S6 LAMP UNLESS NOTED. LETTER IS LENS COLOR:
R = RED, G = GREEN, A = AMBER, Y = YELLOW, B = BLUE, W = WHITE, C = CLEAR

SELECTOR SWITCHES

PB## A B OX / PB## A B OX	TWO (2) POSITION SELECTOR SWITCH
SS## A B OX XO	TWO (2) POSITION, TWO (2) POLE SELECTOR SWITCH
SS## A B OX XO XO	TWO (2) POSITION, THREE (3) POLE SELECTOR SWITCH
SS## A B C XOO / SS## A B C OOX	THREE (3) POSITION SELECTOR SWITCH
SS## A B C XOO OXO OOX	THREE (3) POSITION, THREE (3) POLE SELECTOR SWITCH
SS## A B C D OXOO / SS## A B C D XOOO	FOUR (4) POSITION SELECTOR SWITCH

SELECTOR SWITCHES

SS## A B C D XOOO OXOO OOXO OOOX	FOUR (4) POSITION, FOUR (4) POLE SELECTOR SWITCH

RELAYS

CR## ??? / CR## ???	RELAY CONTACT: NORMALLY OPEN (NO) NORMALLY CLOSED (NC)
CR## CR ### ???	CONTROL RELAY COIL NUMBER AS INDICATED
LR##A L NO NC ???	LATCH RELAY COIL
LR##B U NO NC ???	UNLATCH RELAY COIL

LIMIT SWITCHES

FCN LS## / LS## FCN	POSITION (LIMIT) SWITCH
LS## ??? / LS## ???	POSITION (LIMIT) SWITCH NO: HELD CLOSED NC: HELD OPEN
TS## ??? / TS## ???	TORQUE SWITCH NO: CLOSES ON HIGH TORQUE NC: OPENS ON HIGH TORQUE

PRESSURE & TEMPERATURE SWITCHES

PS## ??? / PS## ???	PRESSURE SWITCH NO: CLOSES ON RISING PRESSURE NC: OPENS ON RISING PRESSURE
PSV## V ??? / PSV## V ???	VACUUM SWITCH NO: CLOSES ON RISING PRESSURE NC: OPENS ON RISING PRESSURE
DPS## ??? / DPS## ???	DIFFERENTIAL PRESSURE SWITCH NO: CLOSES ON RISING DIFFERENTIAL PRESSURE NC: OPENS ON RISING DIFFERENTIAL PRESSURE
TS## ??? / TS## ???	TEMPERATURE SWITCH NO: CLOSES ON RISING TEMPERATURE NC: OPENS ON RISING TEMPERATURE

FLOW & LEVEL SWITCHES

FLT## ??? / FLT## ???	LIQUID LEVEL (FLOAT) NO: CLOSES ON RISING LEVEL NC: OPENS ON RISING LEVEL
FS## ??? / FS## ???	FLOW SWITCH (AIR, WATER, ETC.) NO: CLOSES ON INCREASED FLOW NC: OPENS ON INCREASED FLOW

OTHER SWITCHES

AUX## XO ??? / AUX## XO ???	AUXILIARY SWITCH CONTACT
TGS### ??? / TGS## ???	TOGGLE SWITCH
FTS## FCN / FTS## FCN	FOOT SWITCH
PRS### FCN / PRS### FCN	PROXY SWITCH
PCS## FCN / PCS## FCN	PULL CORD
APL## FCN / APL## FCN	A-PLUG
PE## FCN / PE## FCN	PHOTO EYE
SPDT##A	SINGLE POLE DOUBLE THROW (SPDT) MAINTAIN
SPDT##B	SINGLE POLE DOUBLE THROW (SPDT) RETURN FROM DOWN
SPDT##C	SINGLE POLE DOUBLE THROW (SPDT) RETURN FROM UP
SPDT##D	SINGLE POLE DOUBLE THROW (SPDT) RETURN FROM BOTH

TIMERS

TD## CR ### NO NC ?? DELAY	ON DELAY COIL
TD##A ON DELAY NO NC	ON DELAY MOTOR
TD##A OFF DELAY NO NC	OFF DELAY MOTOR

TIMERS

NORMALLY OPEN (NO)	NORMALLY CLOSED (NC)	DESCRIPTION:
TD## FCN	TD## FCN	ON DELAY NOTC: NORMALLY OPEN TIMED CLOSING, WHEN ENERGIZED NCTO: NORMALLY CLOSED TIMED OPENING, WHEN ENERGIZED
TD## FCN	TD## FCN	OFF DELAY NOTO: NORMALLY OPEN, TIMED OPENING WHEN DEENERGIZED NCTC: NORMALLY CLOSED, TIMED CLOSING WHEN DEENERGIZED

TERMINALS & CONNECTORS

#?	DOT
? ? # #	SQUARE
? ? # #	ROUND
X ? # #	HEXAGON
? ? # #	DIAMOND
? ? # #	TRIANGLE
PDB## L1 L2 L3	POWER DISTRIBUTION BOX
PJ##	PLUG / JACK
PJ##	JACK / PLUG
PJ##	PLUG RIGHT OR UP
PJ##	JACK LEFT OR DOWN
	IN LEFT TOP
	IN BOTH TOP
	OUT RIGHT TOP
	OUT BOTH TOP

MISCELLANEOUS DEVICES

ABE## FCN	BELL
ABU## FCN	BUZZER
AH## FCN	HORN
VM## V FCN	VOLT METER
AM## A FCN	AMP METER
BAT##A - + V OR BAT##B - + V	BATTERY

MISCELLANEOUS DEVICES (CONT)

SINGLE LINE / CONTROL DIAGRAM	DESCRIPTION:
FR## Ω OR FR## Ω	FIXED RESISTOR
VR## Ω OR VR## Ω / VR## Ω OR VR## Ω	VARIABLE RESISTOR
D## OR D##	DIODE
ZD## OR ZD##	ZENER DIODE
C## ???	CAPACITOR
TVS## TVS ???	SUPPRESSOR
	GROUND
RCPT## ??? / RCPT## ???	RECEPTACLES
LT##	ENCLOSURE LIGHT
	GROUND CHASSIS

CONDUITS & CONDUCTORS

	CONDUCTORS NOT CONNECTED
	CONDUCTORS CONNECTED
	CONDUCTOR SHIELD
	CONDUCTOR SHIELD TWISTED PAIR
	FIELD CONDUCTOR SHIELD
	FIELD CONDUCTOR SHIELD TWISTED PAIR
	EARTH GROUND

CONDUITS & CONDUCTORS (CONT)

SINGLE LINE / CONTROL DIAGRAM	DESCRIPTION:
	CHASSIS GROUND
	NEUTRAL
	SEPARABLE CONNECTOR SIFICATION SHOWN.

MOTOR

M## CR ### NO ? NC ? ???	MOTOR STARTER COIL
### HP GEN###	MOTOR
OL MTR###	OVERLOAD
##Ω Ω	RESISTOR OR RESISTIVE ELEMENT
HTR### ???	STRIP HEATER OR HEATING ELEMENT
	HIGH VOLTAGE, GROUP OPERATED, AIR BREAK SWITCH * CONTINUOUS AMPERE RATING
MCR## ??? / MCR## ???	MOTOR CONTACT: NORMALLY OPEN (NO) NORMALLY CLOSED (NC)
CAP##A ???	KVAR CAP
CAP##C ???	THREE PHASE KVAR

NO.	DATE	REVISION	BY	APVD

VERIFY SCALE — BAR IS ONE INCH ON ORIGINAL DRAWING. 0 1" IF NOT ONE INCH ON THIS SHEET, ADJUST SCALES ACCORDINGLY.

DESIGN TCA | DRAWN TCA | CHECKED BGY | APPROVED JHM

WATERWORKS ENGINEERS

provo WELCOME HOME

PROVO CITY
PUBLIC WORKS DEPT
PROVO WRF
PHASE 1, ELEC. UPGRADES
PACKAGE D - CB LC-4 RE-FEED

ELECTRICAL

LEGEND 1

LICENSED PROFESSIONAL ENGINEER BRIAN G. YOUNG NO.8841511 02/26/2025 STATE OF UTAH

DATE FEBRUARY 2025
PROJECT NUMBER 19-002
DRAWING NUMBER E-GN-001
SHEET OF

REUSE OF DOCUMENTS: THIS DOCUMENT, AND THE IDEAS AND DESIGNS INCORPORATED HEREIN, AS AN INSTRUMENT OF PROFESSIONAL SERVICE, IS THE PROPERTY OF WATER WORKS ENGINEERS, LLC. AND IS NOT TO BE USED, IN WHOLE OR IN PART, FOR ANY OTHER PROJECT WITHOUT THE WRITTEN AUTHORIZATION OF WATER WORKS ENGINEERS, LLC.

FILENAME: W:\CAD\PROJECTS\19-002 PROVO WATRR PHASE 1_{S}\PROJECT FILES_PHASE 1 ELECTRICAL UPGRADES\07 DRAWINGS\PACKAGE D - CB LC-4 RE-FEED\PD-1902D-GN-E001.DWG PLOT DATE: February 26, 2025 PLOT TIME: 9:44 AM

SINGLE LINE, CONTROL DIAGRAM & PLAN SYMBOLS

DISCRETE I/O

SINGLE LINE / CONTROL DIAGRAM	DESCRIPTION:
DI## / DI / FCN	DISCRETE INPUT
DO## / DO / FCN	DISCRETE OUTPUT

ANALOG I/O

AI## / AI / FCN	ANALOG INPUT
AO## / AO / FCN	ANALOG OUTPUT

FUSES & CIRCUIT BREAKERS

SINGLE LINE OR CONTROL DIAGRAM	PLAN VIEW	DESCRIPTION:
##A, ???, ##P, CB###		THERMAL MAGNETIC CIRCUIT BREAKER TRIP RATING ABOVE; FRAME RATING BELOW. TYPICAL FOR OTHER TYPES OF BREAKERS. BREAKER TO BE 3 POLE UNLESS NOTED OTHERWISE AS 1P OR 2P
###AT, ###AF, ###, CB###, ???	N/A	DRAWOUT MEDIUM VOLTAGE POWER BREAKER UPPER NUMBER INDICATES LONG TIME TRIP SETTING LOWER NUMBER INDICATES BREAKER CONTINUOUS CURRENT RATING
##A, ???-###, ##P, ???, Z		COMBINATION MOTOR STARTER WITH MOTOR CIRCUIT PROTECTOR, MAGNETIC CONTACTOR AND OVERLOAD PROTECTION X= AMPERE SIZE Z= NEMA SIZE
Z		MOTOR STARTER WITH MAGNETIC CONTACTOR AND OVERLOAD PROTECTION Z= NEMA SIZE
FU##, ##A	N/A	FUSE
FU##, ##A	N/A	FUSED SWITCH

TRANSFORMERS

XFMR###, ##kVA, ###A / ###A, ##Ø	TRANSFORMER, RATINGS AND CONNECTIONS AS NOTED. UNLESS OTHERWISE NOTED ON THE ONE LINE DIAGRAMS ALL DRY TYPE TRANSFORMERS SERVICING ADMINISTRATIVE AND LABORATORY SPACES SHALL HAVE A K FACTOR OF 13. ALL OTHER DRY TYPE TRANSFORMERS SHALL HAVE A K-4 RATING. ISOLATION TRANSFORMERS SHALL HAVE A K-20 RATING
XFMR###, ##kVA, ###A / ###A, ##Ø	DUAL TRANSFORMER
###A / ###A, XF###, (*), ???	CURRENT TRANSFORMER *QUANTITY XXXX = PRIMARY AMPERE RATING
###A / ###A, ???, XF###, (*)	POTENTIAL TRANSFORMER (PT) OR CONTROL POWER TRANSFORMER (CPT) * QUANTITY XXXX = PRIMARY VOLTAGE RATING
	INDUCTOR

NO.	DATE	REVISION	BY	APVD

POWER EQUIPMENT & DEVICES

SINGLE LINE OR CONTROL DIAGRAM	PLAN VIEW	DESCRIPTION:
DISC#, ###AT, ###AF	DISC#	NON-FUSIBLE DISCONNECT SWITCH, 600 VOLT, 3 POLE, (###A) AMPERE RATING
##A, FU##, ##P, ???	F, DISC###	FUSIBLE DISCONNECT SWITCH, 600 VOLT, 3 POLE, AMPERE RATING AND FUSE SIZE AS NOTED (###A) AMPERE RATING (FU#) FUSE RATING
##A, OL, ##P, MTR###	##P, CLR, MMS###	MANUAL MOTOR STARTER WITH THERMAL OVERLOAD PROTECTION "CLR" INDICATES WITH PILOT LIGHT "#P" INDICATES NUMBER OF POLES
	N/A	DRAWOUT TYPE EQUIPMENT OR DEVICE
	N/A	MEDIUM VOLTAGE CABLE TERMINATION
TGS###, FCN	N/A	MEDIUM VOLTAGE AIR INTERRUPTER SWITCH
#AT	N/A	MEDIUM VOLTAGE FUSED FAULT INTERRUPTER #AT = AUTOTRANSFORMER TYPE
M##, M, WM, T##	N/A	METER (M##) WM - WATT METER WHM - WATT HOUR METER WHDM - WATT HOUR DEMAND METER WHDR - WATT HOUR DEMAND RECORDER PF - POWER FACTOR METER TRANSDUCER (T##) AX - CURRENT TRANSDUCER WX - WATT TRANSDUCER
###, HP, GEN###	G	GENERATOR WITH GENERATION NUMBER, RATINGS AND CONNECTIONS AS NOTED IN CALL OUT ON DRAWING
###, HP, MTR###, FCN	MTR	MOTOR, NUMERAL INDICATES HORSEPOWER
ATS##, ???, S, N	ATS-###	AUTOMATIC TRANSFER SWITCH (ATS) "N" INDICATES NORMAL SOURCE "S" INDICATES STANDBY SOURCE #RATE = INDICATES CONTINUOUS CURRENT RATING # = INDICATES ATS NAME
VFD###	VFD-###	AC MOTOR SPEED CONTROLLER (VARIABLE FREQUENCY DRIVE)
SCR###	SCR-###	DC MOTOR SPEED CONTROLLER (SILICON CONTROLLED RECTIFIER)
VM###, VS, VM, (*)	N/A	VOLTMETER WITH SWITCH, 3 PHASE (*) = SCALE
AM###, VS, AM, (*)	N/A	AMMETER WITH SWITCH, 3 PHASE (*) = SCALE
LA##, ???	N/A	LIGHTNING ARRESTOR

POWER EQUIPMENT & DEVICES (CONT)

SINGLE LINE OR CONTROL DIAGRAM	PLAN VIEW	DESCRIPTION:
CR##, FCN	N/A	NON-FUSIBLE DISCONNECT SWITCH, 600 VOLT, 3 POLE, (###A) AMPERE RATING
TVSS	TVSS	TRANSIENT VOLTAGE SURGE SUPPRESSOR (POWER DISTRIBUTION TYPE)
PLT##, CLR, FNC	N/A	PUSH TO TEST, 110V S6 LAMP UNLESS NOTED, LETTER IS LENS COLOR: R = RED G = GREEN C = CLEAR A = AMBER Y = YELLOW B = BLUE W = WHITE
SOL##, FCN	SOV	SOLENOID OPERATED VALVE
ETM	N/A	ELAPSED TIME METER
UH###, ##kW	UH###	UNIT HEATER
WH###, ##kW	WH###	WATER HEATER
DM-####, ##kW	DM-####	DAMPER MOTOR
MOV ####,	MOV	MOTOR OPERATED VALVE "XXXX" DENOTES LOOP NUMBER TO BE OBTAINED FROM INSTRUMENTATION DRAWINGS
N/A		CONTROL STATION
ITP, ITP####, FCN	ITP	INTERMEDIATE TERMINAL PANEL
K	N/A	KEY INTERLOCK
K E	N/A	ELECTRONIC KEY INTERLOCK
		CORD AND PLUG CONNECTION
N/A	T	THERMOSTAT
N/A	OC	OCCUPANCY SENSOR
N/A	PC	PHOTOCELL

POWER EQUIPMENT & DEVICES (CONT)

SINGLE LINE OR CONTROL DIAGRAM	PLAN VIEW	DESCRIPTION:
N/A	ESA	EMERGENCY SHOWER ALARM STATION
OR	N/A	JUMPER
MS	N/A	MOTOR SWITCH
N/A	J	JUNCTION BOX
N/A	PB OR PB	PULL BOX
XXX, XXX		FIELD MOUNTED INSTRUMENT: XXX= DESIGNATION TO BE OBTAINED FROM INSTRUMENTATION DRAWINGS

GROUNDING

	GROUND ROD
	GROUND ROD IN GROUNDING WELL
	GROUND ROD IN TEST WELL
	GROUND GRID CABLE CONNECTION, WELDED

SWITCHES

$a	SINGLE POLE SWITCH "a" INDICATES SWITCH LEG SHALL CONTROL LUMINARIES WITH "a" DESIGNATION
$2b	DOUBLE POLE SWITCH "b" INDICATES SWITCH LEG SHALL CONTROL LUMINARIES WITH "b" DESIGNATION
$3c	THREE WAY SWITCH "c" INDICATES SWITCH LEG SHALL CONTROL LUMINARIES WITH "c" DESIGNATION
$4d	FOUR WAY SWITCH "d" INDICATES SWITCH LEG SHALL CONTROL LUMINARIES "d" DESIGNATION
$M	SINGLE POLE, DOUBLE THROW MOMENTARY CONTACT SWITCH, CENTER OFF
$P	SINGLE POLE SWITCH AND PILOT LIGHT

LIGHTING FIXTURES & EQUIPMENT

Ca	LIGHTING CONTACTOR WITH NUMBER OF POLES AS INDICATED a-CONTACTOR NUMBER (C1, C2, ETC.)
TM	TIME SWITCH

LIGHTING FIXTURES & EQUIPMENT (CONT)

PLAN VIEW	DESCRIPTION:
ALCP-#### OR ALCP-###	AREA LIGHTING CONTACTOR PANEL ### = PANEL NAME
LP-#### OR LP-###	LIGHTING PANEL BOARD NO. # (240/120V OR 208/120V) ### = PANEL NAME
PP-#### OR PP-###	POWER DISTRIBUTION PANEL BOARD NO. # (480V OR 480/277V) ### = PANEL NAME
XX, X, Y, a, NL	TYPICAL LUMINARIES SEE SCHEDULE FOR SPECIFICS "XX"-FIXTURE TYPE X= PANEL BOARD NAME "b"-CONTROLLED BY SWITCH "b" Y= CIRCUIT NUMBER NL= NIGHT LIGHT (UN-SWITCHED)
NL, XX, X, Y, a	WALL MOUNTED LUMINARIE.REFER TO SCHEDULE FOR SPECIFICS. (NOTATIONS SAME AS ABOVE)
??, X, Y, a	DIRECTIONAL FLOOD LIGHT TYPE LUMINARIES. SEE SCHEDULE FOR SPECIFICS. (NOTATIONS SAME AS ABOVE)
??, X, Y, a, NL	FLUORESCENT TYPE LUMINARIES. SEE SCHEDULE FOR SPECIFICS. (NOTATIONS SAME AS ABOVE)
??, X, Y, a, NL	FLUORESCENT TYPE LUMINARIES. SEE SCHEDULE FOR SPECIFICS. (NOTATIONS SAME AS ABOVE)
##-??-###	INDICATES ALL LUMINARIES WITHIN THE ROOM OR AREA IN WHICH THIS NOTATION APPEARS SHALL BE TYPE "A" UNLESS OTHERWISE NOTED. SEE LIGHTING FIXTURE SCHEDULE FOR TYPES
CLR	ALARM BEACON. COLOR AS NOTED. REFER TO SPECIFICATIONS FOR REQUIREMENTS.
E1, X, Y	EMERGENCY LUMINARIES WITH BATTERY PACK "E1" FIXTURE TYPE. REFER TO SCHEDULE FOR SPECIFICS. X= PANEL BOARD NAME Y= CIRCUIT NUMBER
E2, REM, X, Y	REMOTE EMERGENCY LUMINARIES "E2"-FIXTURE TYPE. REFER TO SCHEDULE FOR SPECIFICS
X, Y, SP, XX	CEILING MOUNTED EXIT SIGN "X1" LUMINAIRE TYPE. REFER TO SCHEDULE FOR SPECIFICS LP-##= PANEL BOARD NAME Y= CIRCUIT NUMBER SP= SELF POWERED
XX, X, Y, SP	WALL OUTLET EXIT SIGN. ARROW INDICATES DIRECTION OF EXCESS "X2" LUMINAIRE TYPE. REFER TO SCHEDULE FOR SPECIFICS. LP-## = PANEL BOARD NAME Y= CIRCUIT NUMBER SP= SELF POWERED

LICENSED PROFESSIONAL ENGINEER
BRIAN G. YOUNG
NO.8841511
02/26/2025
STATE OF UTAH

VERIFY SCALE
BAR IS ONE INCH ON ORIGINAL DRAWING.
0 1"
IF NOT ONE INCH ON THIS SHEET, ADJUST SCALES ACCORDINGLY.

DESIGN TCA
DRAWN TCA
CHECKED BGY
APPROVED JHM

WATERWORKS ENGINEERS

PROVO CITY
PUBLIC WORKS DEPT
PROVO WRF
PHASE 1, ELEC. UPGRADES
PACKAGE D - CB LC-4 RE-FEED

ELECTRICAL
LEGEND 2

DATE FEBRUARY 2025
PROJECT NUMBER 19-002
DRAWING NUMBER E-GN-002
SHEET OF

REUSE OF DOCUMENTS: THIS DOCUMENT, AND THE IDEAS AND DESIGNS INCORPORATED HEREIN, AS AN INSTRUMENT OF PROFESSIONAL SERVICE, IS THE PROPERTY OF WATER WORKS ENGINEERS, LLC. AND IS NOT TO BE USED, IN WHOLE OR IN PART, FOR ANY OTHER PROJECT WITHOUT THE WRITTEN AUTHORIZATION OF WATER WORKS ENGINEERS, LLC.

PLAN VIEW SYMBOLS

CONDUIT

PLAN VIEW	DESCRIPTION:
	EXPOSED CONDUIT
	HIDDEN / CONCEALED CONDUIT
	UNDERGROUND CONDUIT
EDB EDB	DUCT BANK
OHE OHE	OVERHEAD POWER LINES
GND GND	GROUNDING CONDUCTOR
100	CONDUITS IDENTIFIED BY A NUMBER SHALL BE LISTED IN THE CONDUIT BLOCK DIAGRAM
AA	CONDUITS IDENTIFIED BY LETTERS SHALL CONFORM TO THE TABLES IN THE LEGEND
	CONDUIT STUBBED OUT AND CAPPED
	FLEXIBLE CONDUIT OR MANUFACTURER'S CABLE(S)
	CONDUIT TURNED DOWN
	CONDUIT TURNED UP
	INDICATES LIMITS OF EQUIPMENT OR WIRING ENCLOSURE
XXXX	CONDUIT HOME RUN, XXX DENOTES DESTINATION CONTRACTOR SHALL FIELD ROUTE FROM EQUIPMENT TO DESIGNATED LOCATION
(2)-3"C, 3-#3/0, 1-#2G	DENOTES A QUANTITY OF TWO (2) 3-INCH CONDUITS EACH CONTAINING THREE NO. 3/0 AWG CONDUCTORS AND 1 NO. 2 AWG GROUND CONDUCTOR
2 PR #16 TWSH	DENOTES A QUANTITY OF TWO INSTRUMENT CABLES. EACH CABLE TO CONSIST OF TWO NO. 16 AWG CONDUCTORS TWISTED TOGETHER AND COVERED WITH A METALLIC SHIELD AND AN OVERALL PROTECTIVE JACKET. REFER TO THE SPECIFICATIONS FOR THE EXACT CABLE TO BE PROVIDED.
2 TR #16 TWSH	SAME AS ABOVE EXCEPT CABLE TO CONSIST OF THREE NO. 16 AWG CONDUCTORS TWISTED, SHIELDED AND COVERED WITH AN OVERALL PROTECTIVE JACKET. REFER TO THE SPECIFICATIONS FOR THE EXACT CABLE TO BE PROVIDED.
2 PR #16 TW	DENOTES A QUANTITY OF TWO INSTRUMENT CABLES. EACH CABLE TO CONSIST OF TWO NO. 16 AWG CONDUCTORS TWISTED TOGETHER AND AN OVERALL PROTECTIVE JACKET. REFER TO THE SPECIFICATIONS FOR THE EXACT CABLE TO BE PROVIDED.
(3)-4"C	THREE 4-INCH CONDUITS

NO.	DATE	REVISION	BY	APVD

POWER RECEPTACLES

PLAN VIEW	DESCRIPTION:
##A LP-### Y	208V, 3P, 4W, RECEPTACLE ##A = AMPERE RATING AS NOTED LP-##= PANEL BOARD NUMBER Y= CIRCUIT NUMBER
##A LP-### Y	240V, 20, 3W, RECEPTACLE ##A = AMPERE RATING AS NOTED LP-##= PANEL BOARD NUMBER Y= CIRCUIT NUMBER
##A LP-### Y	FLOOR OUTLET BOX WITH TYPE OUTLET INDICATED
##A LP-### Y	480V, 3P, 4W RECEPTACLE AND DISCONNECT SWITCH ##A = AMPERE RATING AS NOTED X = PANEL BOARD NUMBER Y = CIRCUIT NUMBER
##A GFCI WP X Y	DUPLEX RECEPTACLE, 20A, 120V, 2P, 3W UNLESS OTHERWISE NOTED * =C - MOUNTED ABOVE COUNTERTOP GF - GROUND FAULT INTERRUPTER TYPE WP - WEATHERPROOF T - TRANSIENT VOLTAGE SURGE SUPPRESSER X= PANEL BOARD NUMBER Y= CIRCUIT NUMBER
##A LP-### Y	QUAD RECEPTACLE, 20A, 120V, 2P, 3W UNLESS OTHERWISE NOTED NOTATION SAME AS ABOVE

SECURITY SYSTEM

PLAN VIEW	DESCRIPTION:
KP	SECURITY SYSTEM KEY PAD
CR	SECURITY SYSTEM CARD ACCESS READER
MD	SECURITY ALARM MOTION DETECTOR
CCTV	CLOSED CIRCUIT TV CAMERA

TELECOMMUNICATION SYSTEM

PLAN VIEW	DESCRIPTION:
TTB	TELEPHONE TERMINAL BOARD 4FT X 8FT X 3/4 INCH UNLESS NOTED OTHERWISE
	TELEPHONE OUTLET, WALL TYPE (MOUNT 1'-6" AFF UNO)
	TELEPHONE OUTLET AND FLOOR BOX
	TELEPHONE/DATA OUTLET, WALL TYPE (MOUNT 1'-6" AFF UNO)
	TELEPHONE/DATA OUTLET AND FLOOR BOX
C1 C	PAGING SPEAKER, WALL MOUNTED "H1" AND "C1" DENOTES TYPE. H=HORNC=CONE
H2 H H1 H	PAGING SPEAKER, WALL MOUNTED, BIDIRECTIONAL NOTATIONS SAME AS ABOVE

TELECOMMUNICATION SYSTEM (CONT)

PLAN VIEW	DESCRIPTION:
C2 C	PAGING SPEAKER, FLUSH MOUNTED CEILING TYPE
S	PAGING STATION, SURFACE MOUNTED
VC	REMOTE WALL MOUNTED VOLUME CONTROL. FOR CEILING SPEAKER (MOUNT UP 5'-0" AFF UNO)
A	PAGING SPEAKER AMPLIFIER ASSEMBLY

FIRE ALARM / LIFE SAFETY

PLAN VIEW	DESCRIPTION:
200 R	FIRE ALARM HEAT DETECTOR 135Y FIXED TEMPERATURE UNLESS OTHER- WISE NOTED. "200" DENOTES 200YF TYPE "R" DENOTES FIXED TEMPERATURE RATE-OF-RISE TYPE.
I DSD	FIRE ALARM DUCT SMOKE DETECTOR PHOTOCELL TYPE UNLESS OTHERWISE NOTED. "I" DENOTES IONIZATION TYPE.
2 DSD	FIRE ALARM DUCT SMOKE DETECTOR
FACP-####	FIRE ALARM CONTROL PANEL
FAVP-####	FIRE ALARM VENTILATION PANEL (WITH GRAPHIC PANEL)
FARAP-####	FIRE ALARM REMOTE ANNUNCIATOR
M WP	FIRE ALARM MANUAL PULL STATION, MOUNT UP 4'-0" WP DENOTES WEATHERPROOF COVER
F	OUTDOOR WEATHERPROOF FIRE ALARM MASTER BOX
F	WP FIRE ALARM SPEAKER, MOUNT UP 7'-8"
S	FIRE ALARM STROBE, WALL MOUNT UP 6'-8" OR AT CEILING
F	FIRE ALARM HORN AND STROBE LIGHT COMBINATION, MOUNT UP 6'-8"
F	FIRE ALARM HORN AND STROBE LIGHT COMBINATION, CEILING MOUNT
	SPRINKLER VALVE SUPERVISORY SWITCH
F	FIRE ALARM BELL

FIRE ALARM / LIFE SAFETY (CONT)

PLAN VIEW	DESCRIPTION:
STB ???	WEATHERPROOF HIGH DENSITY FIRE ALARM STROBE LIGHT
	SPRINKLER FLOW ALARM SWITCH
CM	ADDRESSABLE CONTROL MODULE
MM	ADDRESSABLE MONITOR MODULE
SD	SMOKE DETECTOR

AREA CLASSIFICATION

PLAN VIEW	DESCRIPTION:
DAMP	INDICATES THAT ALL ELECTRICAL EQUIPMENT AND MATERIALS INSTALLED WITHIN THE ROOM OR AREA IN WHICH THIS NOTATION APPEARS SHALL BE OF NEMA 12 CONSTRUCTION (OR GASKETED AND SUITABLE FOR USE IS A WET LOCATION WHERE NEMA STANDARDS DO NOT APPLY) UNLESS OTHERWISE NOTED.
WET	INDICATES THAT ALL ELECTRICAL EQUIPMENT AND MATERIALS INSTALLED WITHIN THE ROOM OR AREA IN WHICH THIS NOTATION APPEARS SHALL BE OF NEMA 4X CONSTRUCTION (OR GASKETED AND SUITABLE FOR USE IN A WET LOCATION WHERE NEMA STANDARDS DO NOT APPLY) UNLESS OTHERWISE NOTED.
CORROSIVE	INDICATES THAT ALL ELECTRICAL EQUIPMENT AND MATERIALS INSTALLED WITHIN THE ROOM OR AREA IN WHICH THIS NOTATION APPEARS SHALL BE OF NEMA 4X CONSTRUCTION (OR GASKETED AND SUITABLE FOR USE IN A WET LOCATION WHERE NEMA STANDARDS DO NOT APPLY) UNLESS OTHERWISE NOTED.
CLASS 1, DIV. 1 GROUP D	INDICATES THAT ALL ELECTRICAL EQUIPMENT AND MATERIALS INSTALLED WITHIN THE ROOM OR AREA IN WHICH THIS NOTATION APPEARS SHALL CONFORM TO N.E.C. REQUIREMENTS FOR THE HAZARDOUS AREA CLASSIFICATION SHOWN.

ABBREVIATIONS

A	AMPS
AC	ALTERNATING CURRENT
AFF	ABOVE FINISHED FLOOR
AHF	ACTIVE HARMONIC FILTER
AIC	AMPS INTERRUPTING CAPACITY
AM	AMMETER
AWG	AMERICAN WIRE GAUGE
CPT	CONTROL POWER TRANSFORMER
DC	DIRECT CURRENT
FU	FUSE
HP	HORSEPOWER
HMCP	HIGH CAPACITY MOTOR CIRCUIT PROTECTOR
KCMIL	THOUSANDS OF CIRCULAR MILS
KV	KILOVOLTS
KVA	KILOVOLT-AMPERES
KW	KILOWATTS
KWH	KILOWATT HOURS
MCP	MOTOR CIRCUIT PROTECTOR
MPR	MULTI-PURPOSE OR MOTOR PROTECTION RELAY
MVA	MEGAVOLT-AMPERES
OL	MOTOR OVERLOADS, THERMAL OR ELECTRONIC
PLC	PROGRAMMABLE LOGIC CONTROLLER
SE	SERVICE ENTRANCE RATED
TB	TERMINAL BLOCK
VFD	VARIABLE FREQUENCY DRIVE
V	VOLTS
VM	VOLTMETER
W	WATTS

VERIFY SCALE
BAR IS ONE INCH ON ORIGINAL DRAWING.
0 1"
IF NOT ONE INCH ON THIS SHEET, ADJUST SCALES ACCORDINGLY.

DESIGN TCA
DRAWN TCA
CHECKED BGY
APPROVED JHM

WATERWORKS ENGINEERS

provo WELCOME HOME

PROVO CITY
PUBLIC WORKS DEPT
PROVO WRF
PHASE 1, ELEC. UPGRADES
PACKAGE D - CB LC-4 RE-FEED

ELECTRICAL
LEGEND 3

BRIAN G. YOUNG
LICENSED PROFESSIONAL ENGINEER
NO.8841511
02/26/2025
STATE OF UTAH

DATE FEBRUARY 2025
PROJECT NUMBER 19-002
DRAWING NUMBER E-GN-003
SHEET OF

REUSE OF DOCUMENTS: THIS DOCUMENT, AND THE IDEAS AND DESIGNS INCORPORATED HEREIN, AS AN INSTRUMENT OF PROFESSIONAL SERVICE, IS THE PROPERTY OF WATER WORKS ENGINEERS, LLC. AND IS NOT TO BE USED, IN WHOLE OR IN PART, FOR ANY OTHER PROJECT WITHOUT THE WRITTEN AUTHORIZATION OF WATER WORKS ENGINEERS, LLC.

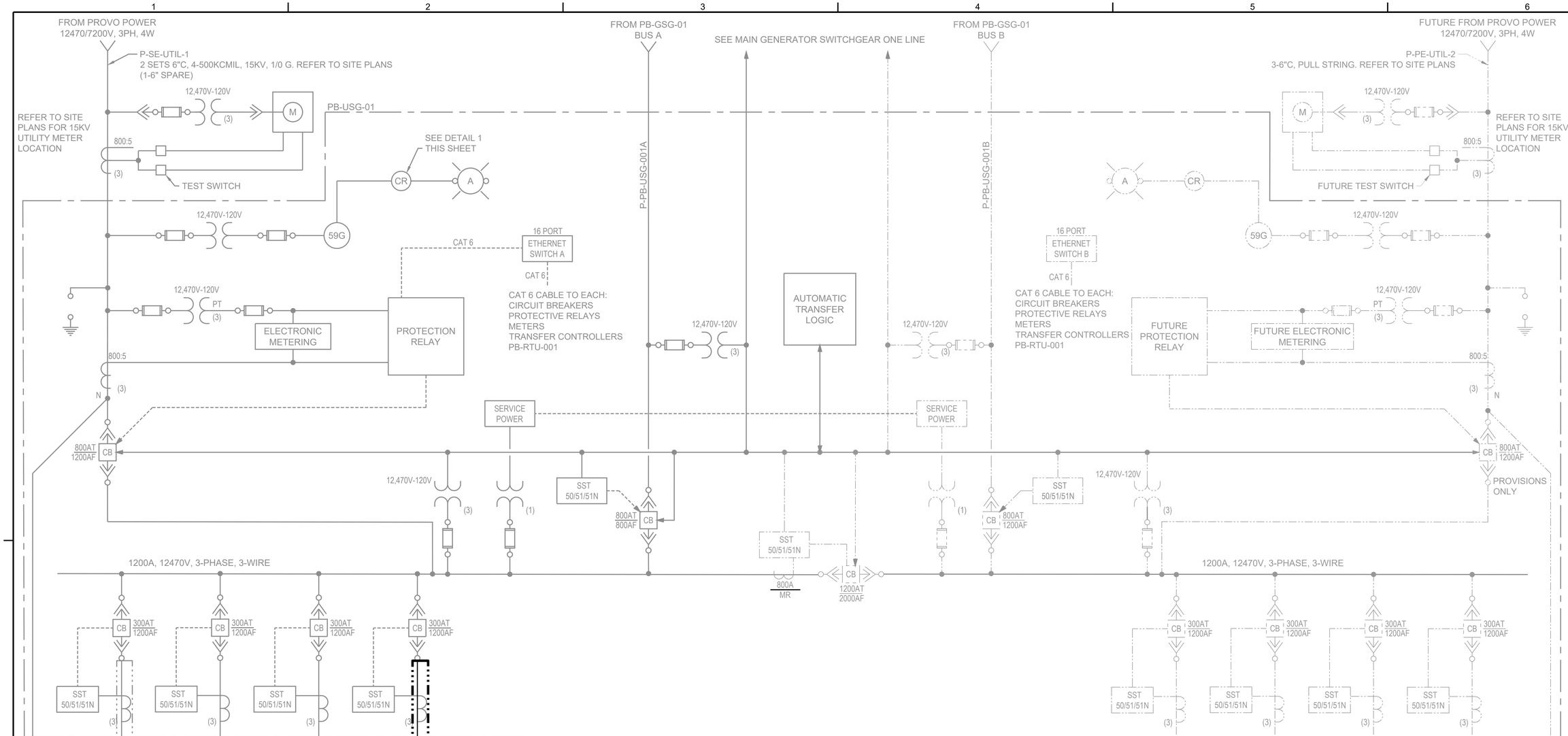

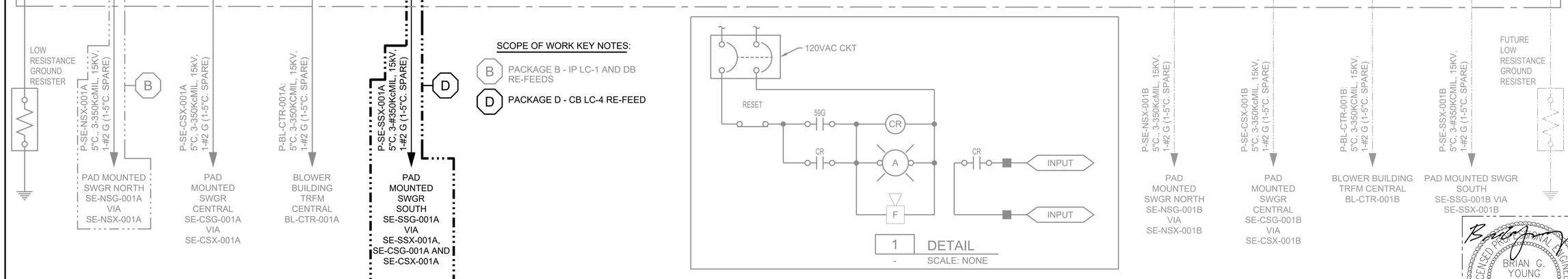

SCOPE OF WORK KEY NOTES:

B PACKAGE B - IP LC-1 AND DB RE-FEEDS

D PACKAGE D - CB LC-4 RE-FEED

1 DETAIL
- SCALE: NONE

1 PB-USG-001 MAIN UTILITY SWITCHGEAR ONE LINE DIAGRAM
- SCALE: NONE

NO.	DATE	REVISION	BY	APVD

VERIFY SCALE
BAR IS ONE INCH ON ORIGINAL DRAWING.
0 1"
IF NOT ONE INCH ON THIS SHEET, ADJUST SCALES ACCORDINGLY.

DESIGN TCA
DRAWN TCA
CHECKED BGY
APPROVED JHM

WATERWORKS ENGINEERS

provo WELCOME HOME

PROVO CITY
PUBLIC WORKS DEPT
PROVO WRF
PHASE 1, ELEC. UPGRADES
PACKAGE D - CB LC-4 RE-FEED

ELECTRICAL

PB-USG-001 MAIN UTILITY SWITCHGEAR ONE LINE DIAGRAM

LICENSED PROFESSIONAL ENGINEER
BRIAN G. YOUNG
NO.8841511
02/26/2025
STATE OF UTAH

DATE FEBRUARY 2025
PROJECT NUMBER 19-002
DRAWING NUMBER E-GN-010
SHEET OF

REUSE OF DOCUMENTS: THIS DOCUMENT, AND THE IDEAS AND DESIGNS INCORPORATED HEREIN, AS AN INSTRUMENT OF PROFESSIONAL SERVICE, IS THE PROPERTY OF WATER WORKS ENGINEERS, LLC. AND IS NOT TO BE USED, IN WHOLE OR IN PART, FOR ANY OTHER PROJECT WITHOUT THE WRITTEN AUTHORIZATION OF WATER WORKS ENGINEERS, LLC.

FILENAME: W:\CAD\PROJECTS\19-002 PROVO WATRR PHASE 1_{S}\PROJECT FILES_PHASE 1 ELECTRICAL UPGRADES\07 DRAWINGS\PACKAGE D - CB LC-4 RE-FEED\PD-1902D-GN-E010.DWG PLOT DATE: February 26, 2025 PLOT TIME: 9:50 AM

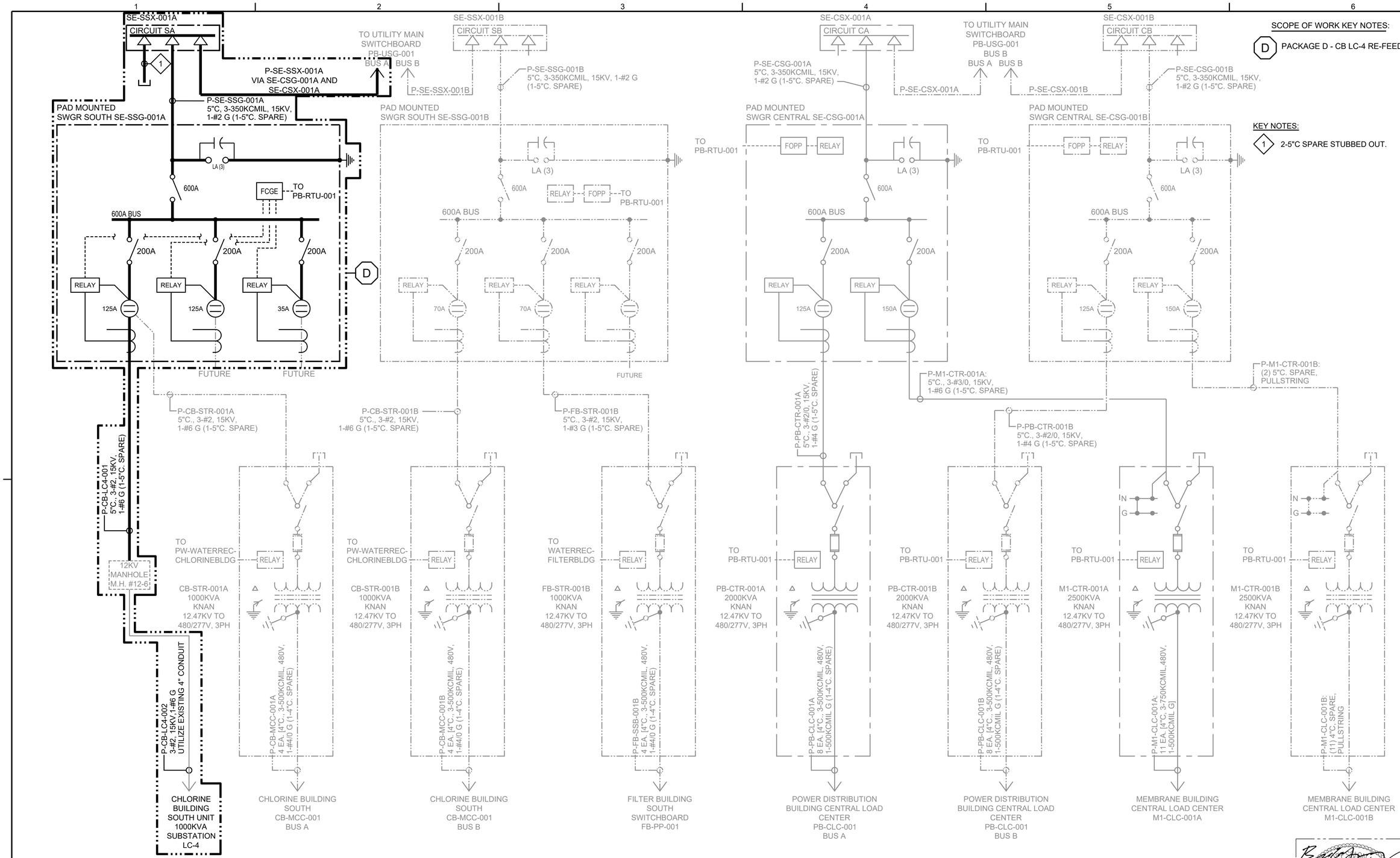

SCOPE OF WORK KEY NOTES:

D PACKAGE D - CB LC-4 RE-FEED

KEY NOTES:

1 2-5"C SPARE STUBBED OUT.

NO.	DATE	REVISION	BY	APVD

1 SITE SWITCHGEAR ONE LINE DIAGRAM

- SCALE: NONE

LICENSED PROFESSIONAL ENGINEER BRIAN G. YOUNG NO.8841511 02/26/2025 STATE OF UTAH

VERIFY SCALE: BAR IS ONE INCH ON ORIGINAL DRAWING. 0 1" IF NOT ONE INCH ON THIS SHEET, ADJUST SCALES ACCORDINGLY.

DESIGN TCA | DRAWN TCA | CHECKED BGY | APPROVED JHM

WATERWORKS ENGINEERS

provo WELCOME HOME

PROVO CITY
PUBLIC WORKS DEPT
PROVO WRF
PHASE 1, ELEC. UPGRADES
PACKAGE D - CB LC-4 RE-FEED

ELECTRICAL
SITE SWITCHGEAR ONE LINE DIAGRAM

DATE FEBRUARY 2025
PROJECT NUMBER 19-002
DRAWING NUMBER E-GN-015
SHEET OF

REUSE OF DOCUMENTS: THIS DOCUMENT, AND THE IDEAS AND DESIGNS INCORPORATED HEREIN, AS AN INSTRUMENT OF PROFESSIONAL SERVICE, IS THE PROPERTY OF WATER WORKS ENGINEERS, LLC. AND IS NOT TO BE USED, IN WHOLE OR IN PART, FOR ANY OTHER PROJECT WITHOUT THE WRITTEN AUTHORIZATION OF WATER WORKS ENGINEERS, LLC.

FILENAME: W:\CAD\PROJECTS\19-002 PROVO WATRR PHASE 1_{S}\PROJECT FILES_PHASE 1 ELECTRICAL UPGRADES\07 DRAWINGS\PACKAGE D - CB LC-4 RE-FEED\PD-1902D-GN-E015.DWG PLOT DATE: February 26, 2025 PLOT TIME: 9:50 AM

SCOPE OF WORK KEY NOTES:

D PACKAGE D - CB LC-4 RE-FEED

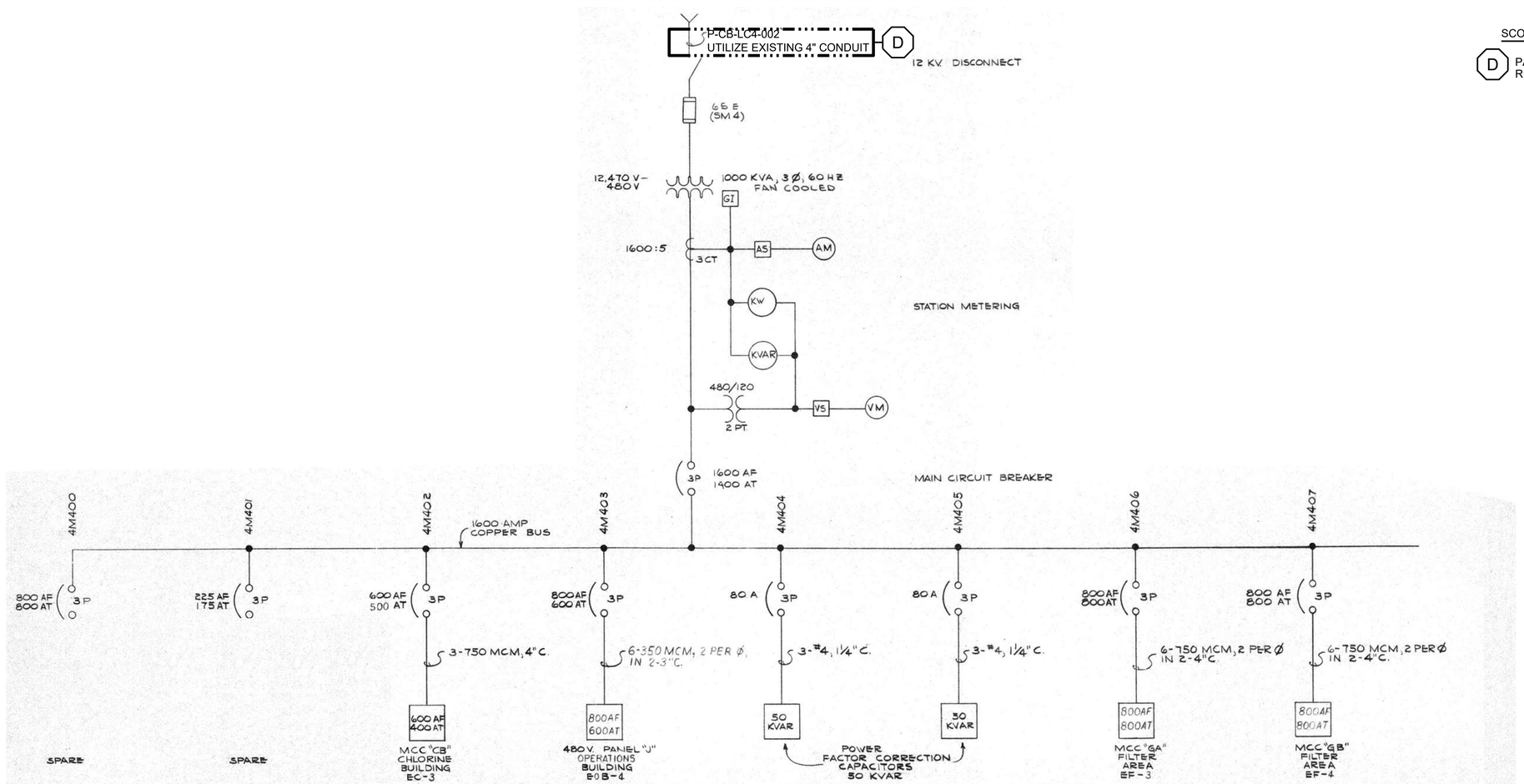

LOAD CENTER № 4 (12.47KV~480V)~SINGLE LINE DIAGRAM

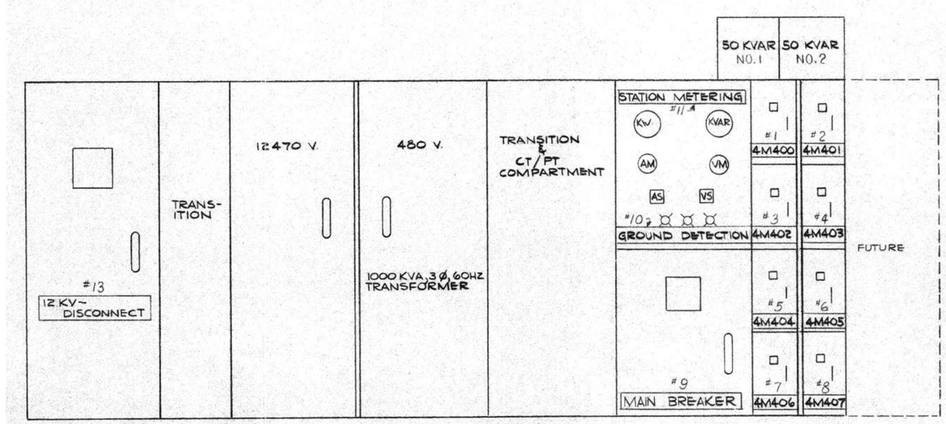

NAMEPLATE DATA

N/P #	CIRCUIT	DESCRIPTION
#1	4M400	800 A SPARE
#2	4M401	175 A SPARE
#3	4M402	MCC "CB" - CHLORINE BLDG
#4	4M403	PANEL "J" - OPERATIONS BUILDING
#5	4M404	50 KVAR - POWER FACTOR CORRECTION CAPACITORS
#6	4M405	50 KVAR POWER FACTOR CORRECTION CAPACITORS
#7	4M406	MCC "GA" - FILTER PUMP STA.
#8	4M407	MCC "GB" - FILTER PUMP STA.
#9	~	MAIN BREAKER
#10	~	GROUND DETECTION
#11	~	STATION METERING
#12		
#13	~	12KV DISCONNECT

1 EXISTING LOAD CENTER NO. 4
ONE LINE DIAGRAM

- SCALE: NONE

NO.	DATE	REVISION	BY	APVD

VERIFY SCALE
BAR IS ONE INCH ON ORIGINAL DRAWING.
0 1"
IF NOT ONE INCH ON THIS SHEET, ADJUST SCALES ACCORDINGLY.

DESIGN TCA
DRAWN TCA
CHECKED BGY
APPROVED JHM

WATERWORKS ENGINEERS

provo WELCOME HOME

PROVO CITY
PUBLIC WORKS DEPT
PROVO WRF
PHASE 1, ELEC. UPGRADES
PACKAGE D - CB LC-4 RE-FEED

ELECTRICAL
LC-4
LOAD CENTER
ONE LINE DIAGRAM

LICENSED PROFESSIONAL ENGINEER
BRIAN G. YOUNG
NO.8841511
02/26/2025
STATE OF UTAH

DATE FEBRUARY 2025
PROJECT NUMBER 19-002
DRAWING NUMBER E-CB-001
SHEET OF

REUSE OF DOCUMENTS: THIS DOCUMENT, AND THE IDEAS AND DESIGNS INCORPORATED HEREIN, AS AN INSTRUMENT OF PROFESSIONAL SERVICE, IS THE PROPERTY OF WATER WORKS ENGINEERS, LLC. AND IS NOT TO BE USED, IN WHOLE OR IN PART, FOR ANY OTHER PROJECT WITHOUT THE WRITTEN AUTHORIZATION OF WATER WORKS ENGINEERS, LLC.

FILENAME: W:\CAD\PROJECTS\19-002 PROVO WATRR PHASE 1_{S}\PROJECT FILES_PHASE 1 ELECTRICAL UPGRADES\07 DRAWINGS\PACKAGE D - CB LC-4 RE-FEED\PD-1902D-CB-E001.DWG PLOT DATE: February 26, 2025 PLOT TIME: 9:51 AM

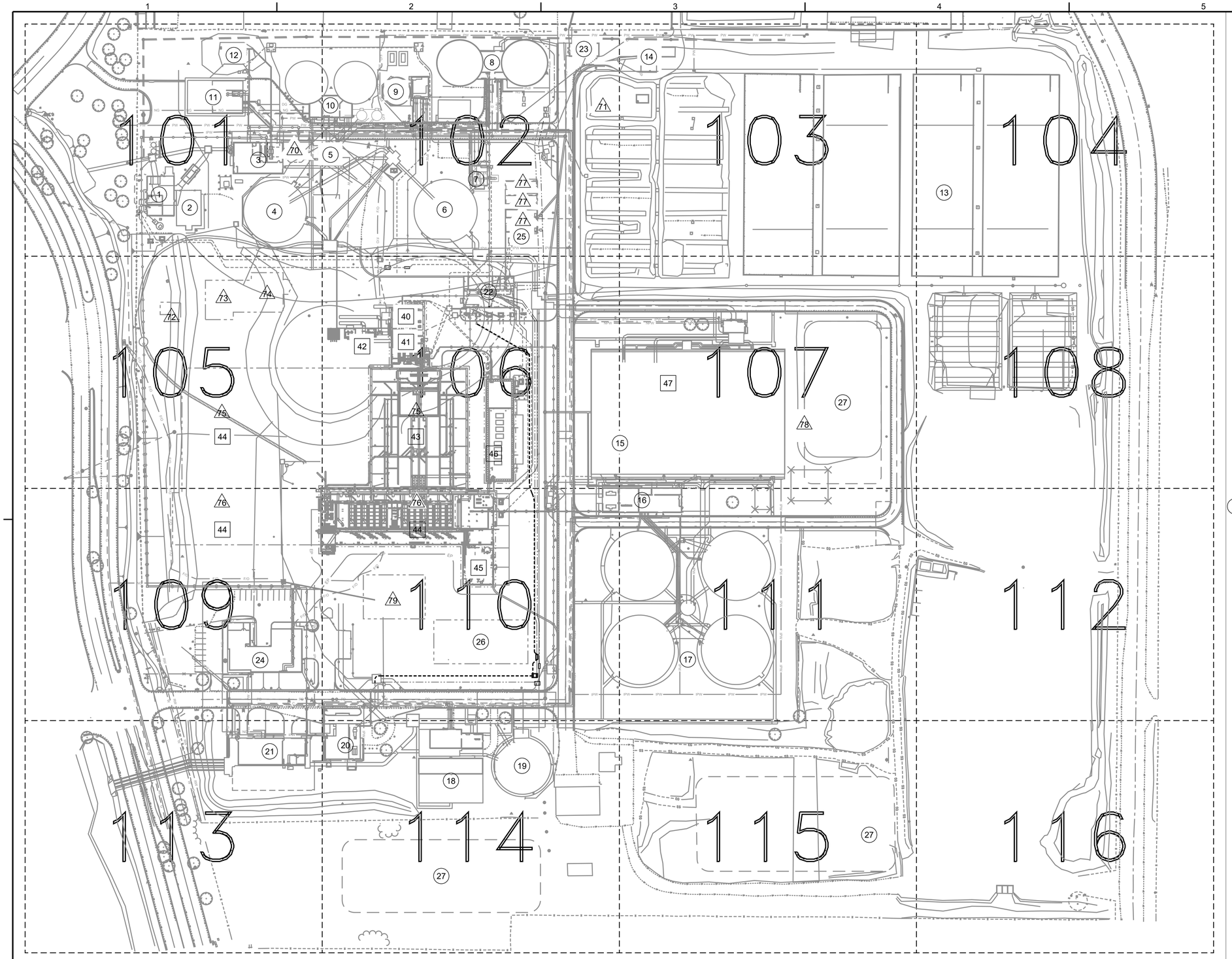

#	EXISTING STRUCTURES
1.	COARSE SCREENS
2.	GRIT BASINS
3.	INFLUENT PUMP STATION
4.	PRIMARY CLARIFIER NO. 1
5.	PRIMARY P.S NO. 1
6.	PRIMARY CLARIFIER NO. 2
7.	PRIMARY P.S NO. 2
8.	PRIMARY DIGESTERS
9.	DAF
10.	SECONDARY DIGESTERS
11.	DEWATERING BUILDING
12.	CENTRATE EQUALIZATION BASIN
13.	DRYING BEDS
14.	FERRIC DOSING FACILITY
15.	AERATION BASINS
16.	BLOWER BUILDING
17.	FINAL CLARIFIERS
18.	FILTER BUILDING
19.	BACKWASH TANK
20.	CHLORINE BUILDING
21.	UV BUILDING
22.	POWER DISTRIBUTION BUILDING
23.	PLANT POWER BUILDING
24.	OPERATIONS BUILDING
25.	STANDBY GENERATORS
26.	CONTRACTOR AND ENGINEERING OFFICE TRAILER
27.	STAGING AREA

#	PACKAGE 2 STRUCTURES
40.	FINE SCREEN PUMP STATION
41.	FINE SCREEN BUILDING
42.	ODOR CONTROL
43.	BIOREACTORS
44.	MEMBRANE BUILDING
45.	CHEMICAL STORAGE
46.	BLOWER BUILDING
47.	EQUALIZATION AND SURGE

#	FUTURE STRUCTURES
70.	NORTH LOAD CENTER
71.	WASTE GAS BURNER
72.	PLANT LIFT STATION
73.	COARSE SCREENS
74.	GRIT BASINS
75.	BIOREACTORS
76.	MEMBRANE BUILDING
77.	STANDBY GENERATORS
78.	SURGE BASINS
79.	OPERATIONS BUILDING
XX.	SURGE BASINS

NO.	DATE	REVISION	BY	APVD

VERIFY SCALE
BAR IS ONE INCH ON ORIGINAL DRAWING.
0 1"
IF NOT ONE INCH ON THIS SHEET, ADJUST SCALES ACCORDINGLY.

DESIGN TCA
DRAWN TCA
CHECKED BGY
APPROVED JHM

WATERWORKS ENGINEERS

provo WELCOME HOME

PROVO CITY
PUBLIC WORKS DEPT
PROVO WRF
PHASE 1, ELEC. UPGRADES
PACKAGE D - CB LC-4 RE-FEED

ELECTRICAL

SITE ELECTRICAL KEY
KEY PLAN

LICENSED PROFESSIONAL ENGINEER
BRIAN G. YOUNG
NO.8841511
02/26/2025
STATE OF UTAH

DATE FEBRUARY 2025
PROJECT NUMBER 19-002
DRAWING NUMBER E-SE-100
SHEET OF

REUSE OF DOCUMENTS: THIS DOCUMENT, AND THE IDEAS AND DESIGNS INCORPORATED HEREIN, AS AN INSTRUMENT OF PROFESSIONAL SERVICE, IS THE PROPERTY OF WATER WORKS ENGINEERS, LLC. AND IS NOT TO BE USED, IN WHOLE OR IN PART, FOR ANY OTHER PROJECT WITHOUT THE WRITTEN AUTHORIZATION OF WATER WORKS ENGINEERS, LLC.

FILENAME: W:\CAD\PROJECTS\19-002 PROVO WATRR PHASE 1_{S}\PROJECT FILES_PHASE 1 ELECTRICAL UPGRADES\07 DRAWINGS\PACKAGE D - CB LC-4 RE-FEED\PD-1902D-SE-E100.DWG PLOT DATE: February 26, 2025 PLOT TIME: 9:57 AM

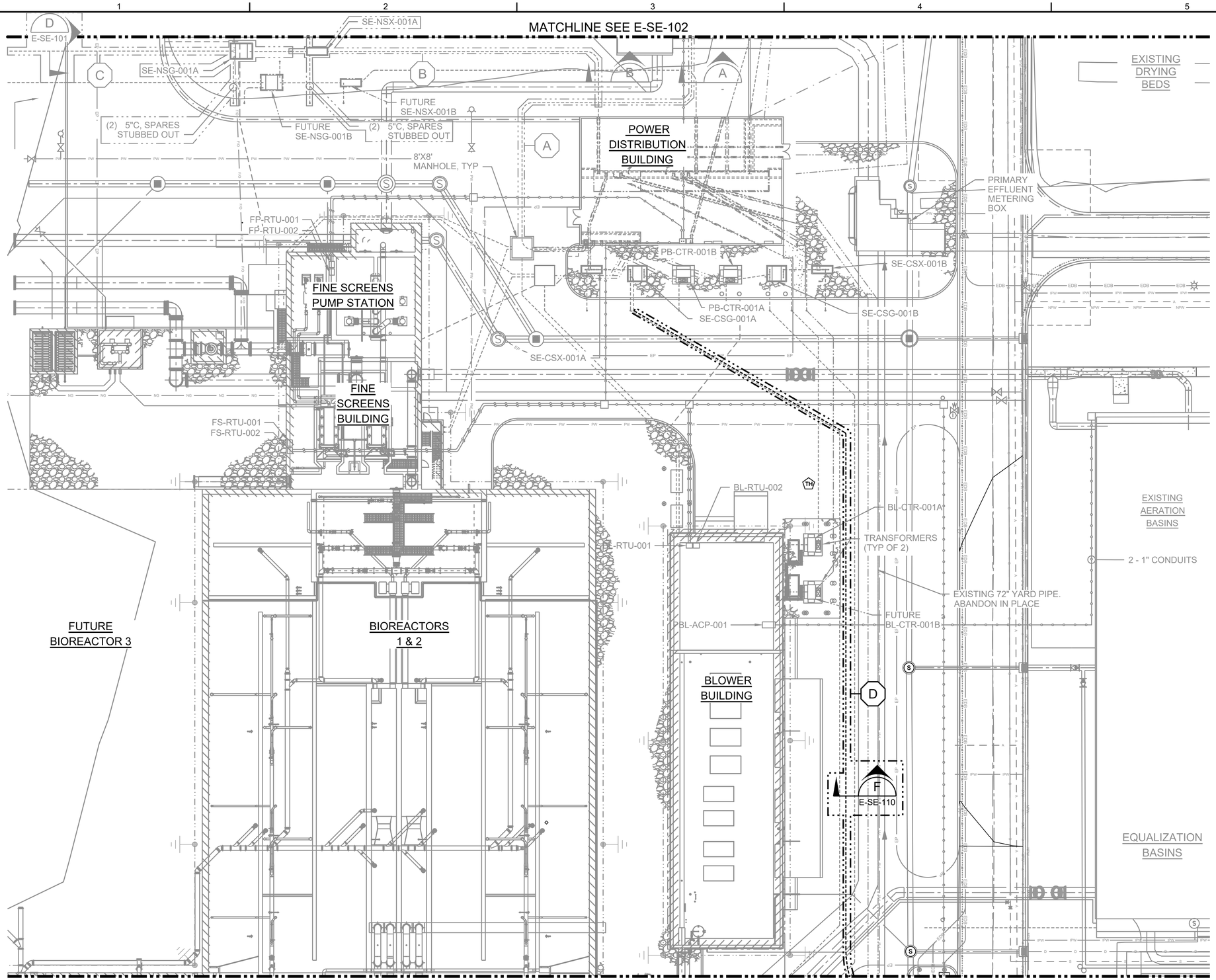

SCOPE OF WORK KEY NOTES:

- A — PACKAGE A - S2 RE-FEED
- B — PACKAGE B - IP LC-1 AND DB RE-FEEDS
- C — PACKAGE C - HW RE-FEED
- D — PACKAGE D - CB LC-4 RE-FEED

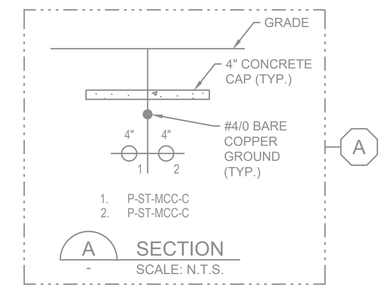

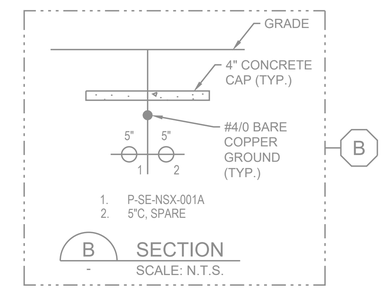

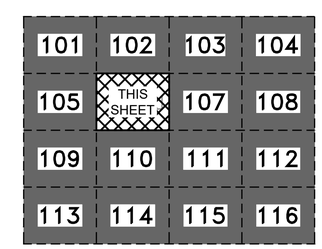

KEY MAP
1"=500'

NORTH

20 0 20 40 FEET
SCALE 1"=20'

NO.	DATE	REVISION	BY	APVD

VERIFY SCALE
BAR IS ONE INCH ON ORIGINAL DRAWING.
0 1"
IF NOT ONE INCH ON THIS SHEET, ADJUST SCALES ACCORDINGLY.

DESIGN TCA
DRAWN TCA
CHECKED BGY
APPROVED JHM

WATERWORKS ENGINEERS

provo WELCOME HOME

PROVO CITY
PUBLIC WORKS DEPT
PROVO WRF
PHASE 1, ELEC. UPGRADES
PACKAGE D - CB LC-4 RE-FEED

ELECTRICAL
SITE ELECTRICAL
AREA 106
PLAN

LICENSED PROFESSIONAL ENGINEER
BRIAN G. YOUNG
NO.8841511
02/26/2025
STATE OF UTAH

DATE FEBRUARY 2025
PROJECT NUMBER 19-002
DRAWING NUMBER E-SE-106
SHEET OF

REUSE OF DOCUMENTS: THIS DOCUMENT, AND THE IDEAS AND DESIGNS INCORPORATED HEREIN, AS AN INSTRUMENT OF PROFESSIONAL SERVICE, IS THE PROPERTY OF WATER WORKS ENGINEERS, LLC. AND IS NOT TO BE USED, IN WHOLE OR IN PART, FOR ANY OTHER PROJECT WITHOUT THE WRITTEN AUTHORIZATION OF WATER WORKS ENGINEERS, LLC.

MATCHLINE SEE E-SE-106

MEMBRANES

MB-RTU-002
MB-RTU-001

TRANSFORMERS
(TYP OF 2)

EXISTING
ELECTRICAL
MAN HOLES

EXISTING
BLOWER BLDG

EB-RTU-001
EB-RTU-002
(ON WALL)

CHEMICAL
STORAGE
AREA

(FUTURE)
ADMINISTRATION
BUILDING

(RESERVED)
CONSTRUCTION
LAYDOWN AREA

FUTURE
SE-SSX-001B

SE-SSX-001A

EXISTING
MANHOLE
M.H.#12-5

EXISTING
MANHOLE
M.H.#12-6

SE-SSG-001A

FUTURE
SE-SSG-001B

P-CB-LC4-002
3-#2, 15KV,1-#6 G
UTILIZE EXISTING 4" CONDUIT

MATCHLINE SEE E-SE-114

SCOPE OF WORK KEY NOTES:

D PACKAGE D - CB LC-4 RE-FEED

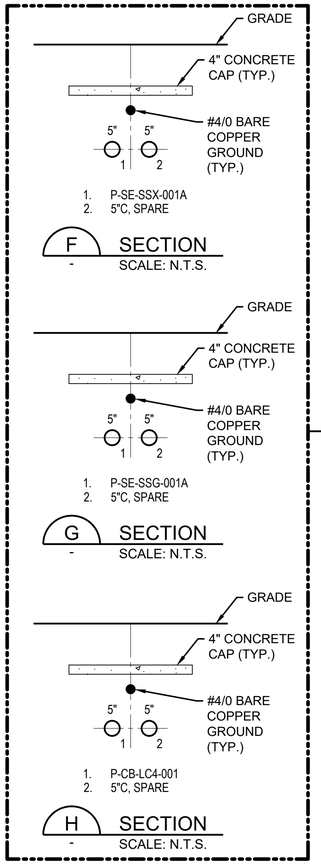

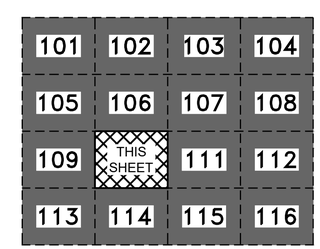

KEY MAP
1"=500'

NORTH

20 0 20 40 FEET
SCALE 1"=20'

NO.	DATE	REVISION	BY	APVD

VERIFY SCALE
BAR IS ONE INCH ON ORIGINAL DRAWING.
0 1"
IF NOT ONE INCH ON THIS SHEET, ADJUST SCALES ACCORDINGLY.

DESIGN TCA
DRAWN TCA
CHECKED BGY
APPROVED JHM

WATERWORKS ENGINEERS

provo WELCOME HOME

PROVO CITY
PUBLIC WORKS DEPT
PROVO WRF
PHASE 1, ELEC. UPGRADES
PACKAGE D - CB LC-4 RE-FEED

ELECTRICAL
SITE ELECTRICAL
AREA 110
PLAN

LICENSED PROFESSIONAL ENGINEER
BRIAN G. YOUNG
NO.8841511
02/26/2025
STATE OF UTAH

DATE FEBRUARY 2025
PROJECT NUMBER 19-002
DRAWING NUMBER E-SE-110
SHEET OF

REUSE OF DOCUMENTS: THIS DOCUMENT, AND THE IDEAS AND DESIGNS INCORPORATED HEREIN, AS AN INSTRUMENT OF PROFESSIONAL SERVICE, IS THE PROPERTY OF WATER WORKS ENGINEERS, LLC. AND IS NOT TO BE USED, IN WHOLE OR IN PART, FOR ANY OTHER PROJECT WITHOUT THE WRITTEN AUTHORIZATION OF WATER WORKS ENGINEERS, LLC.

FILENAME: W:\CAD\PROJECTS\19-002 PROVO WATRR PHASE 1_{S}\PROJECT FILES_PHASE 1 ELECTRICAL UPGRADES\07 DRAWINGS\PACKAGE D - CB LC-4 RE-FEED\PD-1902D-SE-E110.DWG

PLOT DATE: February 26, 2025 PLOT TIME: 10:08 AM

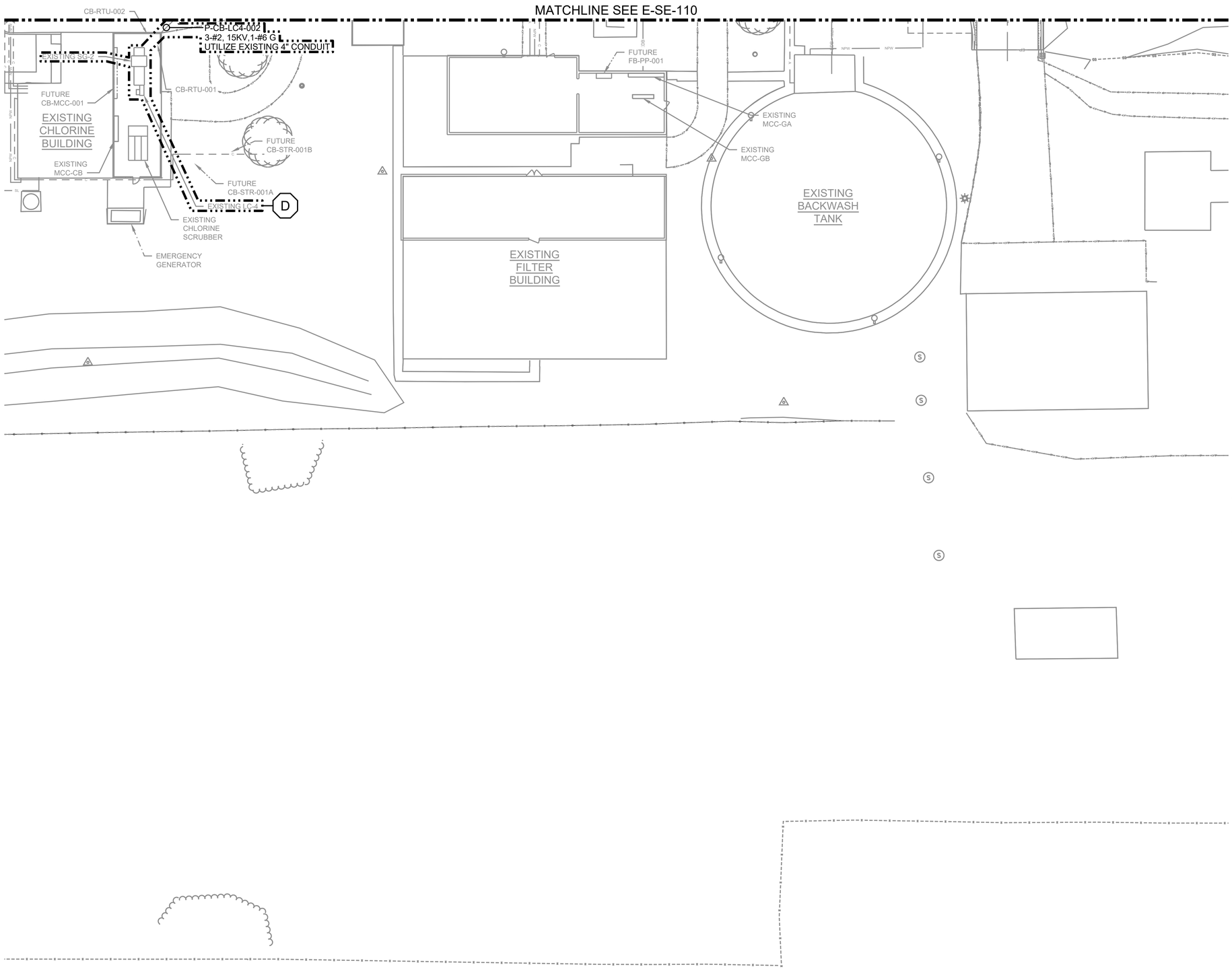

SCOPE OF WORK KEY NOTES:

D PACKAGE D - CB LC-4 RE-FEED

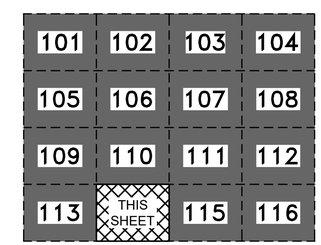

KEY MAP
1"=500'

NORTH

20 0 20 40 FEET
SCALE 1"=20'

LICENSED PROFESSIONAL ENGINEER
BRIAN G. YOUNG
NO.8841511
02/26/2025
STATE OF UTAH

NO.	DATE	REVISION	BY	APVD

VERIFY SCALE
BAR IS ONE INCH ON ORIGINAL DRAWING.
0 1"
IF NOT ONE INCH ON THIS SHEET, ADJUST SCALES ACCORDINGLY.

DESIGN TCA
DRAWN TCA
CHECKED BGY
APPROVED JHM

WATERWORKS ENGINEERS

provo WELCOME HOME

PROVO CITY
PUBLIC WORKS DEPT
PROVO WRF
PHASE 1, ELEC. UPGRADES
PACKAGE D - CB LC-4 RE-FEED

ELECTRICAL
SITE ELECTRICAL
AREA 114
PLAN

DATE FEBRUARY 2025
PROJECT NUMBER 19-002
DRAWING NUMBER E-SE-114
SHEET OF

REUSE OF DOCUMENTS: THIS DOCUMENT, AND THE IDEAS AND DESIGNS INCORPORATED HEREIN, AS AN INSTRUMENT OF PROFESSIONAL SERVICE, IS THE PROPERTY OF WATER WORKS ENGINEERS, LLC. AND IS NOT TO BE USED, IN WHOLE OR IN PART, FOR ANY OTHER PROJECT WITHOUT THE WRITTEN AUTHORIZATION OF WATER WORKS ENGINEERS, LLC.

FILENAME: W:\CAD\PROJECTS\19-002 PROVO WATRR PHASE 1_{S}\PROJECT FILES_PHASE 1 ELECTRICAL UPGRADES\07 DRAWINGS\PACKAGE D - CB LC-4 RE-FEED\PD-1902D-SE-E114.DWG PLOT DATE: February 26, 2025 PLOT TIME: 10:10 AM