PROVO WATER RECLAMATION FACILITY
PHASE 1 PACKAGE 2 2020 CONSTRUCTION

VOLUME 2

FOR CONSTRUCTION: PHASE 1, ELECTRICAL UPGRADES
PACKAGE A: PRIMARY SLUDGE PUMP STATION NO. 2 S2 RE-FEED

FEBRUARY 2025

PROVO CITY

MAYOR

MICHELLE KAUFUSI

CITY COUNCIL

KATRICE MACKAY
GARY GARRETT
CRAIG CHRISTENSEN
GEORGE HANDLEY
BECKY BOGDIN
TRAVIS HOBAN
RACHEL WHIPPLE

CITY STAFF

GORDON HAIGHT - PUBLIC WORKS DIRECTOR
GARY CALDER, PE - WATER RESOURCES DIRECTOR
DAVID TORGERSEN, PE - PROJECT MANAGER

DESIGN TEAM

JOHN MATTA PE, PRINCIPAL - WATER WORKS ENGINEERS
JENNY CALDERON PE, PROJECT MANAGER - WATER WORKS ENGINEERS

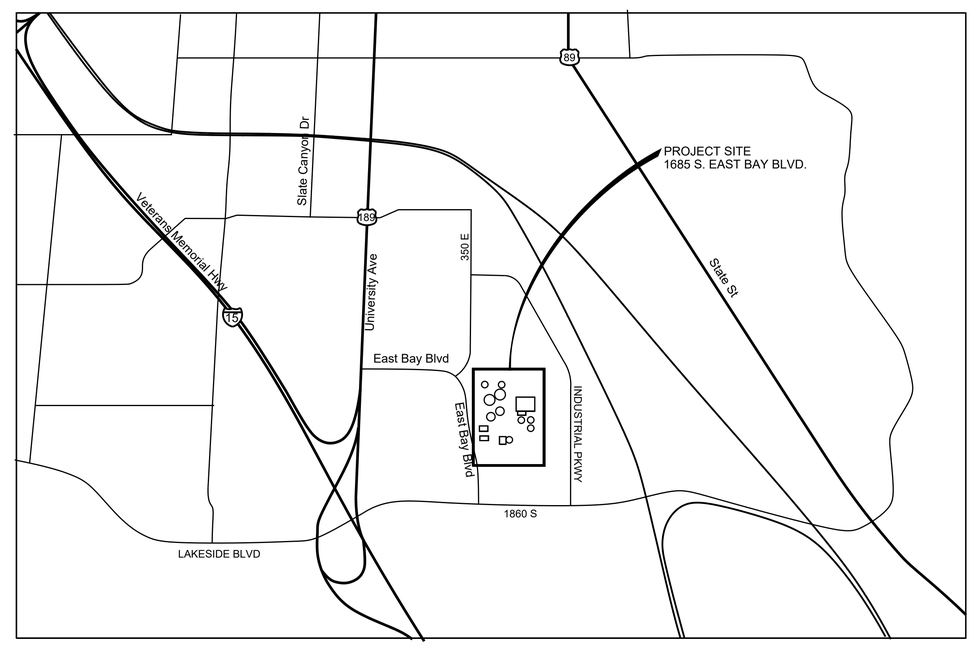

LOCATION MAP
NTS

LICENSED PROFESSIONAL ENGINEER JOHN H. MATTA 8169064-2202 02/26/2025 STATE OF UTAH

LICENSED PROFESSIONAL ENGINEER BRIAN G. YOUNG NO.8841511 02/26/2025 STATE OF UTAH

LICENSED PROFESSIONAL ENGINEER JENNIFER CALDERON 12284243-2202 02/26/2025 STATE OF UTAH

NO.	DATE	REVISION	BY	APVD

VERIFY SCALE
BAR IS ONE INCH ON ORIGINAL DRAWING.
0 1"
IF NOT ONE INCH ON THIS SHEET, ADJUST SCALES ACCORDINGLY.

DESIGN JEN
DRAWN JAM
CHECKED JEN
APPROVED JHM

WATERWORKS ENGINEERS

PROVO CITY
PUBLIC WORKS DEPT
PROVO WRF
PHASE 1, ELEC. UPGRADES
PACKAGE A - S2 RE-FEED

GENERAL
COVER SHEET

DATE FEBRUARY 2025
PROJECT NUMBER 19-002
DRAWING NUMBER G-GN-001
SHEET OF

FILENAME: W:\CAD\PROJECTS\19-002 PROVO WATRR PHASE 1_{S}\PROJECT FILES_PHASE 1 ELECTRICAL UPGRADES\07 DRAWINGS\PACKAGE A - S2 RE-FEED\PA-1902D-GN-G001.DWG PLOT DATE: February 26, 2025 PLOT TIME: 11:06 AM

SHEET NUMBER	DISCIPLINE/ DRAWING NUMBER	TITLE
	GENERAL	
1	G-GN-001	COVER SHEET
2	G-GN-002	DRAWING INDEX 1
3	G-GN-003	ABBREVIATIONS
4	G-GN-004	STANDARD DESIGNATIONS
	DEMOLITION	
5	D-GN-001	LC-1 LOAD CENTER ONE LINE DIAGRAM
6	D-GN-002	SLUDGE PUMP STATION NO. 2 MOTOR CONTROL CENTER MCC-C PLAN AND ONE LINE DIAGRAM
	HVAC	
7	H-GN-001	HVAC LEGEND
8	H-S2-101	PRIMARY SLUDGE PUMP STATION NO. 2 PLAN
9	H-S2-201	PRIMARY SLUDGE PUMP STATION NO. 2 SECTIONS
10	H-S2-301	DETAILS
11	H-S2-401	PRIMARY SLUDGE PUMP STATION NO. 2 ELEVATIONS
12	H-S2-600	SCHEDULES
	ELECTRICAL	
13	E-GN-001	LEGEND 1
14	E-GN-002	LEGEND 2
15	E-GN-003	LEGEND 3
16	E-GN-018	PB-CLC-001 LOAD CENTER ONE LINE DIAGRAM
17	E-GN-019	PB-CLC-001 LOAD CENTER ELEVATION
18	E-GN-501	BLOCK DIAGRAM 1
19	E-GN-521	SCHEMATICS 1
20	E-GN-522	SCHEMATICS 2
21	E-GN-523	SCHEMATICS 3
22	E-SE-100	SITE ELECTRICAL KEY PLAN
23	E-S2-102	SITE ELECTRICAL AREA 102 PLAN
24	E-SE-106	SITE ELECTRICAL AREA 106 PLAN
25	E-S2-001	S2-MCC-C MOTOR CONTROL CENTER ONE LINE DIAGRAM
26	E-S2-101	PRIMARY SLUDGE PUMP STATION NO. 2 POWER PLAN
	INSTRUMENTATION	
27	N-GN-011	PROPOSED NETWORK ARCHITECTURE
28	N-GN-012	S2-RTU 001 NETWORK DIAGRAM AND TYPICAL RTU ELEVATION

NO.	DATE	REVISION	BY	APVD

LICENSED PROFESSIONAL ENGINEER
JENNIFER CALDERON
12284243-2202
02/26/2025
STATE OF UTAH

VERIFY SCALE
BAR IS ONE INCH ON ORIGINAL DRAWING.
0 1"
IF NOT ONE INCH ON THIS SHEET, ADJUST SCALES ACCORDINGLY.

DESIGN JEN
DRAWN JAM
CHECKED JEN
APPROVED JHM

WATERWORKS ENGINEERS

provo WELCOME HOME

PROVO CITY
PUBLIC WORKS DEPT
PROVO WRF
PHASE 1, ELEC. UPGRADES
PACKAGE A - S2 RE-FEED

GENERAL

DRAWINGS INDEX 1

DATE FEBRUARY 2025
PROJECT NUMBER 19-002
DRAWING NUMBER G-GN-002
SHEET OF

FILENAME: W:\CAD\PROJECTS\19-002 PROVO WATRR PHASE 1_{S}\PROJECT FILES_PHASE 1 ELECTRICAL UPGRADES\07 DRAWINGS\PACKAGE A - S2 RE-FEED\PA-1902D-GN-G002.DWG PLOT DATE: February 26, 2025 PLOT TIME: 1:12 PM

ABBREVIATIONS

@	AT
AB	ANCHOR BOLT, AGGREGATE BASE
AC	ASPHALTIC CONCRETE
ACI	AMERICAN CONCRETE INSTITUTE
ADD	ADDITIONAL
ADH AB	ADHESIVE ANCHOR BOLT
ADJ	ADJACENT, ADJUSTABLE
AFF	ABOVE FINISH FLOOR
AFG	ABOVE FINISH GRADE
AHP	AIR: HIGH PRESSURE
AIR	COMPRESSED AIR
AISC	AMERICAN INSTITUTE OF STEEL CONSTRUCTION
AL	ALUMINUM SULFATE
ALP	AIR LOW PRESSURE
ALTN	ALTERNATE
AMH	AMMONIUM HYDROXIDE
ANSI	AMERICAN NATIONAL STANDARDS INSTITUTE
APPROX	APPROXIMATE
APVD	APPROVED
APWA	AMERICAN PUBLIC WORKS ASSOCIATION
AR	AERATION
ARCH, A	ARCHITECTURAL
ARV	AIR RELEASE VALVE
ASTM	AMERICAN SOCIETY FOR TESTING AND MATERIALS
AUTO	AUTOMATIC
AUX	AUXILIARY
AV	AIR/VACUUM ASSEMBLY
AVE	AVENUE
AWG	AMERICAN WIRE GAGE
AWWA	AMERICAN WATER WORKS ASSOCIATION
AX	ANOXIC
B	BORING
BAV	BALL VALVE
BC	BEGIN CURVE, BOTTOM OF CURB
BD	BLOW DOWN
BDP	BACKDRAFT DAMPER
BF	BLIND FLANGE, BOTTOM FACE
BFD	BUTTERFLY VALVE DAMPER
BFP	BACKFLOW PREVENTER ASSEMBLY
BFV	BUTTERFLY VALVE
BLDG	BUILDING
BLM	BUREAU OF LAND MANAGEMENT
BM	BENCH MARK, BEAM
BO	BLOW OFF
BOC	BACK OF CURB
BOO	BOTTOM OF OPENING
BOG	BACK OF GUTTER
BOT	BOTTOM
BRG	BEARING
BWI	BACKWASH IN
BWO	BACKWASH OUT
BYP	BYPASS
°C	DEGREE CELSIUS
C TO C, CC	CENTER TO CENTER
C	CHANNEL (BEAM)
CAA/ARV	COMBINATION AIR ADMISSION/ AIR RELEASE VALVE
CARV	COMBINATION AIR RELEASE VALVE
CATH	CATHODIC PROTECTION
CATV	CABLE TELEVISION
CB	CATCH BASIN
CCP	CONCRETE CYLINDER PIPE
CCS	CENTRAL CONTROL SYSTEM
CE	CONDENSATE
CF	CUBIC FEET
CFM	CUBIC FEET PER MINUTE
CFS	CUBIC FEET PER SECOND
CHEM	CHEMICAL
CI	CAST IRON
CIGC	CAST IRON GROOVED COUPLING
CIMJ	CAST IRON MECHANICAL JOINT
CIP	CAST IRON PIPE
CIRJ	CAST IRON RESTRAINED JOINT
CISP	CAST IRON SOIL PIPE
CJ	CONSTRUCTION JOINT, CONTRACTION JOINT
CKV	CHECK VALVE
CL	CENTERLINE
CLDIP	CEMENT-LINED DUCTILE IRON PIPE
CLG	CEILING
CLR	CLEAR, CLEARANCE
CLSM	CONTROLLED LOW STRENGTH MATERIAL
CML, CSP	CONCRETE MORTAR LINED AND COATED STEEL PIPE
CMLSP	CEMENT MORTAR LINED STEEL PIPE
CMP	CORRUGATED METAL PIPE
CMU	CONCRETE MASONRY UNIT
CO	CLEANOUT
COL	COLUMN
COM	COMMUNICATION
COMB	COMBINED
CONC	CONCRETE
CONN	CONNECTION
CONT	CONTINUOUS, CONTINUATION
COORD	COORDINATE
CPLG	COUPLING
CTRD, CTD	CENTERED
CTR	CENTER
CU	COPPER
CU FT	CUBIC FOOT
CU IN	CUBIC INCH
CU YD	CUBIC YARD
CULV	CULVERT
CV	CHECK VALVE
CW	CIRCULATING WATER
D	PENNY
DBA	DEFORMED BAR ANCHOR
DBL	DOUBLE
DEC	DECANT
DET	DETAIL
DI	DROP INLET, DUCTILE IRON
DIA	DIAMETER
DIAG	DIAGONAL
DIL	DILUTE
DIM	DIMENSION
DIMJ	DUCTILE IRON MECHANICAL JOINT
DIP	DUCTILE IRON PIPE
DIPPL	DUCTILE IRON PIPE, POLYETHYLENE LINED
DIR	DIRECTION
DIST	DISTANCE
DN	DOWN
DO	DITTO
DR	DRAIN
DWG	DRAWING
E	EAST, ELECTRIC, ELECTRICAL
EA	EACH
EC	END CURVE
ECC	ECCENTRIC
EF	EACH FACE, EXHAUST FAN
EFL	EFFLUENT
EG	EXHAUST GAS
EJ	EXPANSION JOINT
EL	ELEVATION
ELB, ELL	ELBOW
ELC	ELECTRICAL LOAD CENTER
ELEC	ELECTRIC, ELECTRICAL
EM	EMISSION MEASUREMENT
ENGR	ENGINEER
EO	EMERGENCY OVERFLOW
EP	EDGE OF PAVEMENT
EQL SP	EQUALLY SPACED
EQPT	EQUIPMENT
ERW	EFFLUENT REUSE WATER
ESA	ENVIRONMENTALLY SENSITIVE AREA
ESC	EROSION SEDIMENT CONTROL
ESEW	EMERGENCY SHOWER/EYE WASH
EVC	END OF VERTICAL CURVE
EW	EACH WAY
EWEF	EACH WAY, EACH FACE
EXC	EXCAVATE
EXH	EXHAUST
EXP	EXPOSED, EXPANSION
EXP JT	EXPANSION JOINT
EXST	EXISTING
°F	DEGREE FAHRENHEIT
FB	FLAT BAR
FC	FLEXIBLE COUPLING
FCA	FLANGED COUPLING ADAPTER
FCO	FLOOR CLEAN OUT
FD	FLOOR DRAIN
FDA	FLOOR DRAIN W/INTEGRAL TRAP
FDN	FOUNDATION
FDV	FILTER DRAIN VALVE
FES	FLARED END SECTION
FEXT	FIRE EXTINGUISHER
FF	FINISH FLOOR
FG	FINISH GRADE, FLUE GAS
FHY	FIRE HYDRANT
FI	FLOW INDICATOR
FIG	FIGURE
FIL	FILTRATE
FL	FLOOR, FLOW LINE
FLG	FLANGE
FLH	FLAT HEAD
FLL	FLOW LINE
FLTR	FILTER
FM	FLOW METER
FNSH	FINISH
FO	FUEL OIL
FOC	FACE OF CONCRETE
FRP	FIBERGLASS REINFORCED PLASTIC
FSPS	FINE SCREEN PUMP STATION
FT	FOOT OR FEET
FTG	FOOTING
FWD	FORWARD
G	GAS
GA	GAGE
GALV	GALVANIZED
GB	GRADE BREAK
GC	GROOVED COUPLING
GCF	GROOVED COUPLING FITTING
GCO	GRADE CLEAN OUT
GD	GENERAL DRAINAGE
GE	GROOVED END
GL	GLASS
GPD	GALLONS PER DAY
GPH	GALLONS PER HOUR
GPM	GALLONS PER MINUTE
GRTG	GRATING
GSP	GALVANIZED STEEL PIPE
GT	GAS TURBINE
GV	GATE VALVE
GVL	GRAVEL
GW	GROUND WATER
HB	HOSE BIB
HD	HUB DRAIN
HDR	HEADER
HDW	HARDWARE
HF	HIGH PRESSURE FEEDWATER
HGT	HEIGHT
HM	HOLLOW METAL
HORIZ	HORIZONTAL
HP	HIGH POINT, HORSEPOWER
HPS	HIGH PRESSURE STREAM
HR	HANDRAIL
HSS	HOLLOW STRUCTURE STEEL
HV	HOSE VALVE
HWY	HIGHWAY
HYD	HYDRANT
IA	INSTRUMENT AIR
I&C	INSTRUMENTATION & CONTROL
ID	INSIDE DIAMETER
IF	INSIDE FACE
IMLR	INTERNAL MIXED LIQUOR RETURN
IN	INCH
INFL	INFLUENT
INSTM	INSTRUMENTATION
INSUL	INSULATE, INSULATION
INV	INVERT
IP	IRON PIPE
IR	IRON ROD
IW	INJECTION WATER
JT	JOINT
KIP	THOUSAND POUNDS
KW	KILOWATT
L	LEFT, ANGLE, LENGTH
LAB	LABORATORY
LAT'L	LATERAL
LB	POUNDS
LB/CU FT	POUNDS PER CUBIC FOOT
LF	LINEAR FEET
LG	LONG
LONG	LONGITUDINAL
LP	LOW POINT
LR	LONG RADIUS
LS	LOW PRESSURE STREAM
MAX	MAXIMUM
MCC	MOTOR CONTROL CENTER
MCJ	MASONRY CONTROL JOINT
MECH	MECHANICAL
MFR	MANUFACTURER
MGD	MILLION GALLONS PER DAY
MH	MANHOLE
MIN	MINIMUM, MINUTE
MISC	MISCELLANEOUS
MJ	MECHANICAL JOINT
MOV	MOTOR OPERATED VALVE
MPH	MILES PER HOUR
MSNRY	MASONRY
MSP	MILL STEEL PIPE, MANUAL OF STANDARD PRACTICE
MT	MEMBRANE TANKS
MTL	MATERIAL
MV	MUD VALVE
MW	MAKE UP WATER
MWS	MAXIMUM WATER SURFACE
N	NORTH
NC	NORMALLY CLOSED
NE	NORTHEAST
NG	NATURAL GAS
NH3	AMMONIA
NIC	NOT IN CONTRACT
NO.	NUMBER, NUMBERING
NPT	NATIONAL PIPE THREAD
NPW	NON POTABLE WATER
NTS	NOT TO SCALE
NW	NORTHWEST
OC	ON CENTER, ODOR CONTROL
OD	OUTSIDE DIAMETER, OVERFLOW DRAIN
OF	OUTSIDE FACE
OFR	OVERFLOW RETURN
OHE	OVERHEAD ELECTRIC
OMRF	ORDINARY MOMENT RESISTING FRAME
O TO O	OUT TO OUT
OP	OPERATING
OPNG	OPENING
OPP	OPPOSITE
OZ	OUNCE
PC	POINT OF CURVE
PE	PLAIN END, POLYETHYLENE OR PERMANENT EASEMENT
PENT	PENETRATION
PI	POINT OF INTERSECTION
PJF	PREMOLDED JOINT FILLER
PL	PLATE, PROPERTY LINE
PLYWD	PLYWOOD
PLV	PLUG VALVE
POB	POINT OF BEGINNING
POC	POINT OF CONNECTION
POE	POINT OF ENDING
PP, P&P	PLAN AND PROFILE, POWER POLE
PPM	PARTS PER MILLION
PRC	POINT OF REVERSE CURVE
PRCST	PRECAST
PREFAB	PREFABRICATED
PRESS	PRESSURE
PRI	PRIMARY
PROP	PROPERTY
PRV	PRESSURE RELEASE VALVE
PS	PUMP STATION
PSF	POUNDS PER SQUARE FOOT
PSI	POUNDS PER SQUARE INCH
PSIG	POUNDS PER SQUARE INCH, GAUGE
PT	POINT OF TANGENCY
P.U.E.	PUBLIC UTILITY EASEMENT
PV	PLUG VALVE
PVC	POLYVINYL CHLORIDE PLASTIC \ POINT OF VERTICAL CURVE
PVCGS	POLYVINYL CHLORIDE PLASTIC-GRAVITY SEWER TYPE
PVCW	POLYVINYL CHLORIDE PLASTIC-WATER DISTRIBUTION SERVICE TYPE
PVI	POINT OF VERTICAL INTERSECTION
PVMT	PAVEMENT
PVT	POINT OF VERTICAL TANGENCY, PRIVATE
R, RAD	RADIUS
RC	REINFORCED CONCRETE
RCP	REINFORCED CONCRETE PIPE
RD	ROAD, ROOF DRAIN
RDCR	REDUCER
REF	REFER OR REFERENCE
REINF	REINFORCED, REINFORCING, REINFORCE
REQD	REQUIRED
RJ	RESTRAINED JOINT
RLS	RUBBER LINED STEEL
RM	ROOM
RMJ	RESTRAINED MECHANICAL JOINT
RNG	RENEWABLE NATURAL GAS
RO	ROUGH OPENING OR REVERSE OSMOSIS
RP	RADIUS POINT
R/R	REMOVE AND REPLACE
RST	REINFORCING STEEL
RT	RIGHT
RTN	RETURN WATER
RV	ROOF VENT
RW	RAW WATER
R/W	RIGHT-OF-WAY
S	I-BEAM, SOUTH, SLOPE
S =	SLOPE EQUALS
SA	SERVICE AIR
SAT	SUSPENDED ACOUSTIC TILE
SCFH	STANDARD CUBIC FEET PER HOUR
SCFM	STANDARD CUBIC FEET PER MINUTE
SCH	SCHEDULE
SE	SOUTHEAST
SEC	SECONDARY
SECT	SECTION
SH	SHEET
SHC	SODIUM HYPOCHLORITE
SLD	SLUDGE
SLG	SLIDE GATE
SLP	SLOPE
SMP	SAMPLE
SOLN	SOLUTION
SP	SPACE OR SPACES
SPD	SUMP PUMP DRAIN
SPEC	SPECIFICATIONS
SPLY	SUPPLY
SQ	SQUARE
SQ FT	SQUARE FOOT
SQ IN	SQUARE INCH
	SAMPLING SYSTEM
SSH	SAFETY SHOWER
SST	STAINLESS STEEL
ST	SAMPLE TAP
STA	STATION
STD	STANDARD
STIF	STIFFENER
STL	STEEL, STEEL PIPE
STLS	STEEL PIPE (SPECIAL)
STR	STRAIGHT
STRL	STRUCTURAL
STRUCT	STRUCTURE
SUBFL	SUBFLOOR
SUSP	SUSPEND
SW	SERVICE WATER, SOUTHWEST
SYMM	SYMMETRICAL
T	TANGENT, TELEPHONE LINE, TOP
t, T	THICKNESS
T&B	TOP AND BOTTOM
T&G	TONGUE AND GROOVE
TBG	TUBING
TC	TOP OF CONCRETE
TCE	TEMPORARY CONSTRUCTION EASEMENT
TDH	TOTAL DYNAMIC HEAD
TECH	TECHNICAL
TEL	TELEPHONE
TEMP	TEMPORARY, TEMPERATURE
TF	TOP FACE
THD	THREAD
THK	THICK
TNK	TANK
TOB	TOP OF BAFFLE
TOC	TOP OF CURB
TG	TOP OF GRATING
TOW	TOP OF WALL
TP	TURNING POINT, TEST PIT
TRANS	TRANSITION
TRANSV	TRANSVERSE
TS	TUBE STEEL
TST	TOP OF STEEL
TT	THRUST TIE
TW	TREATED GROUND WATER
TWS	TRACER WIRE STATION
TYP	TYPICAL
UBC	UNIFORM BUILDING CODE
UD	UNDERDRAIN
UG	UNDERGROUND
UH	UNIT HEATER
UNK	UNKNOWN
UNO	UNLESS NOTED OTHERWISE
V	VENT, VOLT, VALVE
VAC	VACUUM
VDP	VOLUME DAMPER
VAR	VENT ACID RESISTANT
VC	VERTICAL CURVE
VERT	VERTICAL
VM	VM VALVE MODULE
VPI	VERTICAL POINT OF INTERSECTION
VPS	VENEER PLASTER SYSTEM
VTR	VENT THRU ROOF
W/	WITH
W	WIDE FLANGE (BEAM), WEST, WATER
WATRR	WATER ADVANCED TREATMENT AND RESOURCE RECOVERY
WC	WATER CLOSET
WD	WOOD
WM	WATER METER
WR	WATER RESISTANT
WS	WATER SURFACE, WATER STOP
W SH ST	WEATHERING SHEET STEEL
WSP	WELDED STEEL PIPE
WT	WATER TIGHT
WTR	WATER
WW	WASHWATER OR WASTEWATER
WWF	WELDED WIRE FABRIC
YD	YARD
YH	YARD HYDRANT

NO.	DATE	REVISION	BY	APVD

LICENSED PROFESSIONAL ENGINEER
JENNIFER CALDERON
12284243-2202
02/26/2025
STATE OF UTAH

VERIFY SCALE
BAR IS ONE INCH ON ORIGINAL DRAWING.
0 1"
IF NOT ONE INCH ON THIS SHEET, ADJUST SCALES ACCORDINGLY.

DESIGN JEN
DRAWN JAM
CHECKED JEN
APPROVED JHM

WATERWORKS ENGINEERS

provo WELCOME HOME

PROVO CITY
PUBLIC WORKS DEPT
PROVO WRF
PHASE 1, ELEC. UPGRADES
PACKAGE A - S2 RE-FEED

GENERAL
ABBREVIATIONS

DATE FEBRUARY 2025
PROJECT NUMBER 19-002
DRAWING NUMBER G-GN-003
SHEET OF

DRAWING NUMBER

DISCIPLINE — M-BC-101 — DRAWING SERIES NUMBER

FACILITY DESIGNATION

DISCIPLINE

LETTER	DISCIPLINE
G	GENERAL
D	DEMOLITION
C	CIVIL
A	ARCHITECTURAL
S	STRUCTURAL
M	MECHANICAL
H	HEATING, VENTILATION AND COOLING
P	PLUMBING
E	ELECTRICAL
N	INSTRUMENTATION

FACILITY DESIGNATION

FACILITY	AREA
GENERAL	GN
CIVIL GRADING AND DRAINAGE	CD
YARD PIPING	YP
SITE ELECTRICAL	SE
EXISTING HEADWORKS	HW
EXISTING INFLUENT PUMP STATION	IP
EXISTING PRIMARY CLARIFIERS	EC
EXISTING PRIMARY SLUDGE PUMP STATION NO. 1	S1
EXISTING PRIMARY SLUDGE PUMP STATION NO. 2	S2
COARSE SCREENS & GRIT	CG
PRIMARY CLARIFIERS	PC
PRIMARY SLUDGE PUMP STATION	P1
EXISTING AERATION BASINS (AB)	EA
BIOREACTOR COMPLEX (INCLUDES THE FOLLOWING SUB-AREAS)	BC
FINE SCREEN PUMP STATION	FP
FINE SCREENS BUILDING	FS
BIOREACTORS	BR
MEMBRANE BUILDING	MB
EXISTING BLOWER BUILDING	EB
BLOWER BUILDING	BL
ODOR CONTROL BIOFILTER	OC
EQUALIZATION AND SURGE BASINS	EQ
EXISTING CHLORINE BUILDING	CB
EXISTING FILTER BUILDING	FB
EXISTING UV BUILDING	UV
PLANT LIFT STATION	LS
EXISTING PRIMARY DIGESTERS	1D
WASTE GAS BURNER	GS
EXISTING DAF THICKENER	DT
EXISTING SECONDARY DIGESTERS	2D
EXISTING SECONDARY SLUDGE PUMP STATION	P2
EXISTING DEWATERING BUILDING	DB
STRUVITE CONTROL	ST
POWER DISTRIBUTION BUILDING	PB
EXISTING POWER DISTRIBUTION BUILDING	PE
STANDBY GENERATORS	SG
NORTH LOAD CENTER BUILDING	L1
OPERATIONS BUILDING	OP
MAINTENANCE BUILDING	MN

DRAWING SERIES

NUMBER SERIES	DRAWING TYPE
000	GENERAL
100	PLANS
200	SECTIONS
300	DETAILS
400	ELEVATIONS/ISOMETRICS
500	SCHEMATICS
600	SCHEDULES AND P&IDs
700	DEMOLITION ELEVATIONS
800	POINT TABLES
900	NOT USED

NO.	DATE	REVISION	BY	APVD

PROCESS IDENTIFICATION

PROCESS	AREA
PLANT LIFT STATION	09
COARSE SCREENS AND COARSE SCREENINGS HANDLING	10
GRIT REMOVAL AND GRIT PUMPS	11
GRIT WASHER/CLASSIFIER	12
FINE SCREEN PUMP STATION	13
EQUALIZATION AND SURGE	14
COMPRESSED AIR MIXING SYSTEM-EQUALIZATION	15
PRIMARY CLARIFIER 1	20
PRIMARY CLARIFIER 2	21
PRIMARY SLUDGE PUMP STATION 1	22
PRIMARY SLUDGE PUMP STATION 2	23
PRIMARY SCUM PUMPS	24
PRIMARY SLUDGE THICKENER 1 (FUTURE)	25
PRIMARY SLUDGE THICKENER 2 (FUTURE)	26
THICKENER DECANT PUMP STATION (FUTURE)	27
THICKENED SLUDGE PUMP STATION (FUTURE)	28
FINE SCREENS, FINE SCREENINGS HANDLING AND ODOR CONTROL	29
BIOREACTOR VALVE GALLERY A – BIOREACTORS 1 AND 2	30
BIOREACTOR VALVE GALLERY B – BIOREACTORS 3 AND 4 (FUTURE)	31
BIOREACTOR VALVE GALLERY C – BIOREACTORS 5 AND 6 (FUTURE)	32
BIOREACTOR 1	33
BIOREACTOR 2	34
BIOREACTOR 3 (FUTURE)	35
BIOREACTOR 4 (FUTURE)	36
BIOREACTOR 5 (FUTURE)	37
BIOREACTOR 6 (FUTURE)	38
PROCESS AIR BLOWERS	39
MIXED LIQUOR CHANNEL	40
RAS CHANNEL, RAS PUMPS, AND DO DEPLETION CHANNELS	41
BASIN DRAIN PUMP STATION	42
MEMBRANE TANK 1	43
MEMBRANE TANK 2	44
MEMBRANE TANK 3	45
MEMBRANE TANK 4	46
MEMBRANE TANK 5	47
MEMBRANE TANK 6	48
MEMBRANE TANK 7	49
MEMBRANE TANK 8	50
MEMBRANE TANK 9 (FUTURE)	51
MEMBRANE TANK 10 (FUTURE)	52
MEMBRANE TANK 11 (FUTURE)	53
MEMBRANE TANK 12 (FUTURE)	54
PERMEATE WEIR BOX	55
COMPRESSED AIR MIXING SYSTEM - BIOREACTORS	56
WAS PUMP STATION – MEMBRANE TANKS 1 - 8	57
WAS PUMP STATION – MEMBRANE TANKS 9 – 12 (FUTURE)	58
PLANT COMPRESSED AIR SYSTEM	59
AIR SCOUR BLOWERS	60
MEMBRANE BACKPULSE PUMPS	61
COMPRESSED AIR SYSTEM - MEMBRANES	62
SODIUM HYPOCHLORITE STORAGE AND FEED	63
CITRIC ACID STORAGE AND FEED	64
ALUM STORAGE AND FEED	65
UV DISINFECTION SYSTEM	67
IMPURE WATER PUMP STATION	68
PLANT DRAIN SYSTEM	69
ANAEROBIC DIGESTER CONTROL SYSTEM	70
ANAEROBIC DIGESTER 1	71
ANAEROBIC DIGESTER 2	72
RNG PROCESSING (FUTURE)	73
WASTE GAS BURNER	74
STRUVITE CONTROL - AERATED SLUDGE SYSTEM	75
DAF THICKENER	80
DAF SYSTEM	81
SECONDARY DIGESTER 1	82
SECONDARY DIGESTER 2	83
SECONDARY DIGESTER TRANSFER/CENTRIFUGE FEED PUMPS	84
DEWATERING	90
CENTRIFUGES AND DEWATERED SOLIDS CONVEYORS	91
POLYMER STORAGE AND FEED	92
TRUCK LOADING SYSTEM	93
CENTRATE EQUALIZATION SYSTEM	94

FLOW STREAM ID LEGEND

ID	FLOWSTREAM	ID	FLOWSTREAM
AF	ANTI-FOAMING AGENT	MLR	MIXED LIQUOR RETURN
ALUM	ALUMINUM SULFATE	ML	MIXED LIQUOR
AS	AIR SCOUR	NG	NATURAL GAS
BD	BASIN DRAIN	NGH	HIGH PRESSURE NATURAL GAS
BP	MEMBRANE BACKPULSE	NGL	LOW PRESSURE NATURAL GAS
BYP	BYPASS	NPW	NON POTABLE WATER
CA	COMPRESSED AIR	OF	OVERFLOW
CEN	CENTRATE	PA	PROCESS AIR
CIPS	CLEAN IN PLACE SOLUTION	PD	PLANT DRAIN
CIT	CITRIC ACID	PE	PRIMARY EFFLUENT
CK	SLUDGE CAKE	PI	PRIMARY INFLUENT
CW	COLD WATER	PRM	PERMEATE
DAFI	DAF INFLUENT	POL	POLYMER
DAFR	DAF RECYCLE	PS	PRIMARY SLUDGE
DAFU	DAF UNDERFLOW	PW	POTABLE WATER
DEC	DECANT	RAS	RETURN ACTIVATED SLUDGE
DG	DIGESTER GAS	RF	RETURN FLOW
DR	DRAIN	SA	SAMPLE
DSL	DIGESTED SLUDGE	SC	SCUM
EQ	EQUALIZATION	SHC	SODIUM HYPOCHLORITE
EQR	EQUALIZATION BASIN RETURN	SCR	SCREENINGS
FA	FOUL AIR	SD	STORM DRAIN
FO	FOAM	SL	SAMPLE LINE
FE	FINAL EFFLUENT	SPD	SUMP DISCHARGE
GTO	GRAVITY THICKENER OVER FLOW	SPE	SCREENED PRIMARY EFFLUENT
GRT	GRIT	SPS	STRUVITE PRECIPIATED SLUDGE
HPA	HIGH PRESSURE AIR	SS	SANITARY SEWER
HW	HOT WATER	SW	SEAL WATER
INF	INFLUENT	TG	TAIL GAS
IPW	IMPURE WATER	TSL	THICKENED SLUDGE
IRR	IRRIGATION	V	DRAIN VENT
LUB	LUBRICATION	WAS	WASTE ACTIVATED SLUDGE
MGCL2	MAGNESIUM CHLORIDE		

SECTION

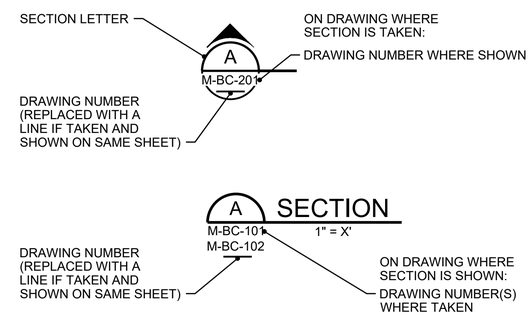

DETAIL

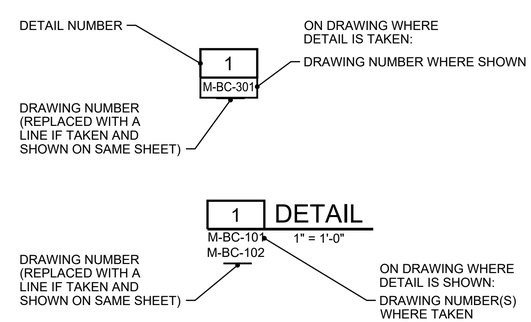

STANDARD DETAIL

AS SHOWN ON DRAWING — 12345 — DETAIL NUMBER

AS SHOWN ON STANDARD DETAIL — 12345

NOTES:

1. STANDARD DETAIL CALLOUTS ARE SHOWN TO INDICATE DETAIL REQUIRED AT SPECIFIC LOCATIONS. DETAILS ARE NOT CALLED OUT AT ALL LOCATIONS. WHERE A STANDARD DETAIL CALLOUT IS NOT SHOWN, THE CONTRACTOR SHALL USE THE STANDARD DETAIL MOST APPLICABLE AND CONSISTENT WITH OTHER WORK UNDER THIS CONTRACT.

UNIQUE VALVE AND OPERATOR

P08-BFV-XXX

NEW PLANT DESIGNATION — UNIQUE NUMBER

PROCESS DESIGNATION — VALVE TYPE

EQUIPMENT DESIGNATION

P08-P-101

NEW PLANT DESIGNATION — EQUIPMENT TYPE

PROCESS DESIGNATION — UNIQUE NUMBER

LINE TYPE APPEARANCE

———	BLACK	NEW 'ON' DISCIPLINE
———	LIGHT OR MEDIUM GRAY OR SCREENED	EXISTING 'ON' OR 'OFF' DISCIPLINE
———	DARK GRAY	NEW 'OFF' DISCIPLINE
———	FUTURE	FUTURE 'ON' DISCIPLINE

GENERAL SYMBOLOGY

STRUCTURE OR EQUIPMENT TO BE REMOVED OR DEMOLISHED

LICENSED PROFESSIONAL ENGINEER — JENNIFER CALDERON — 12284243-2202 — 02/26/2025 — STATE OF UTAH

VERIFY SCALE — BAR IS ONE INCH ON ORIGINAL DRAWING. 0 1" — IF NOT ONE INCH ON THIS SHEET, ADJUST SCALES ACCORDINGLY.

DESIGN JEN | DRAWN JAM | CHECKED JEN | APPROVED JHM

WATERWORKS ENGINEERS

provo WELCOME HOME

PROVO CITY
PUBLIC WORKS DEPT
PROVO WRF
PHASE 1, ELEC. UPGRADES
PACKAGE A - S2 RE-FEED

GENERAL

STANDARD DESIGNATIONS

DATE FEBRUARY 2025
PROJECT NUMBER 19-002
DRAWING NUMBER G-GN-004
SHEET OF

GENERAL DEMOLITION NOTES:

1. DE-ENERGIZE AND MAKE SAFE AT SOURCE ALL EQUIPMENT SCHEDULED FOR DEMOLITION PRIOR TO BEGINNING WORK.
2. COORDINATE ALL SHUT-DOWNS WITH OWNER PRIOR TO BEGINNING DEMOLITION.

INDICATES EQUIPMENT TO BE DEMOLISHED

SCOPE OF WORK KEY NOTES:

(A) PACKAGE A - S2 RE-FEED

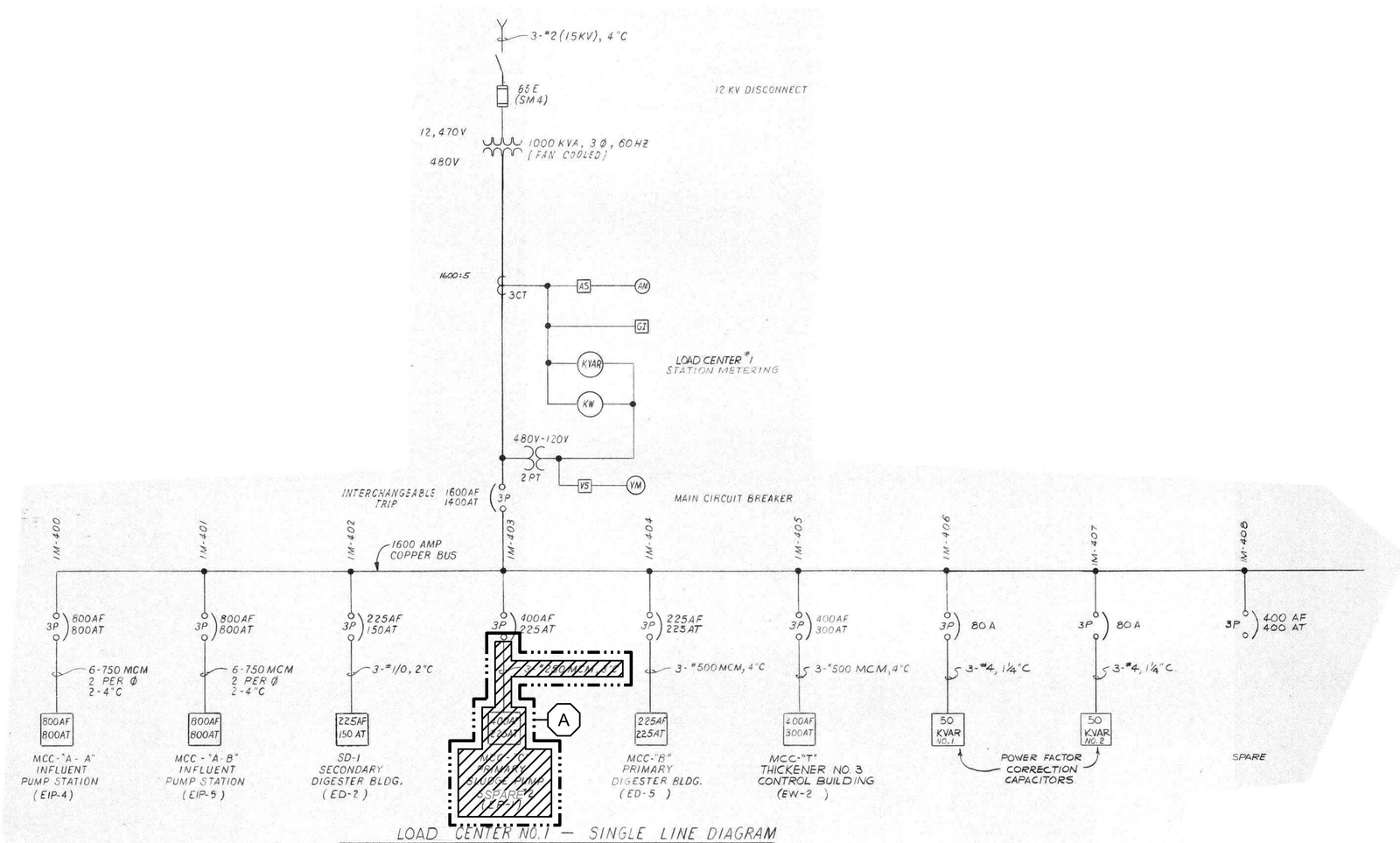

LOAD CENTER NO.1 — SINGLE LINE DIAGRAM

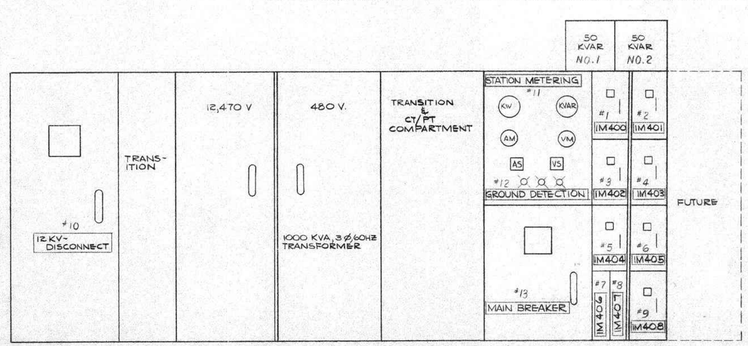

LOAD CENTER NO.1
NAMEPLATE LEGEND

N/P NUMBER	CIRCUIT NUMBER	NAMEPLATE
#1	IM-400	MCC - "A-A" – INFLUENT PUMP STATION
#2	IM-401	MCC - "A-B" – INFLUENT PUMP STATION
#3	IM-402	SD-1 – SECONDARY DIGESTER BUILDING
#4	IM-403	SPARE
#5	IM-404	MCC - "B" – PRIMARY DIGESTER BUILDING
#6	IM-405	MCC - "T" – THICKENER NO. 3 BUILDING
#7	IM-406	50 KVAR CAPACITOR NO. 1
#8	IM 407	50 KVAR CAPACITOR NO. 2
#9	IM 408	SPARE - 400 AMP
#10		12KV-DISCONNECT
#11		STATION METERING
#12		GROUND DETECTION
#13		MAIN BREAKER

(A)

NO.	DATE	REVISION	BY	APVD

VERIFY SCALE
BAR IS ONE INCH ON ORIGINAL DRAWING.
0 1"
IF NOT ONE INCH ON THIS SHEET, ADJUST SCALES ACCORDINGLY.

DESIGN TCA
DRAWN TCA
CHECKED BGY
APPROVED JHM

WATERWORKS ENGINEERS

provo WELCOME HOME

PROVO CITY
PUBLIC WORKS DEPT
PROVO WRF
PHASE 1, ELEC. UPGRADES
PACKAGE A - S2 RE-FEED

DEMOLITION
LC-1
LOAD CENTER
ONE LINE DIAGRAM

LICENSED PROFESSIONAL ENGINEER
BRIAN G. YOUNG
NO.8841511
02/26/2025
STATE OF UTAH

DATE FEBRUARY 2025
PROJECT NUMBER 19-002
DRAWING NUMBER D-GN-001
SHEET OF

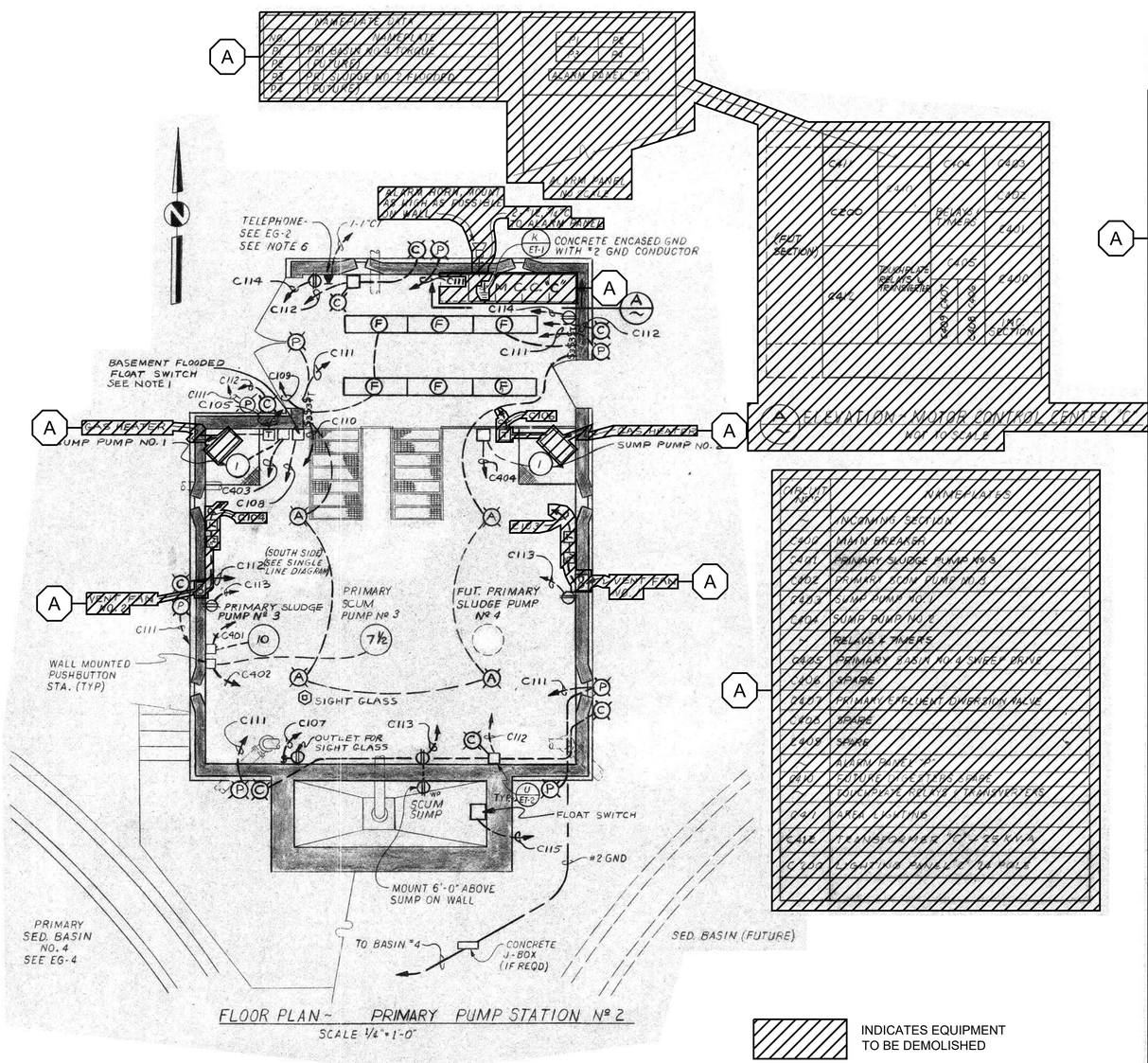

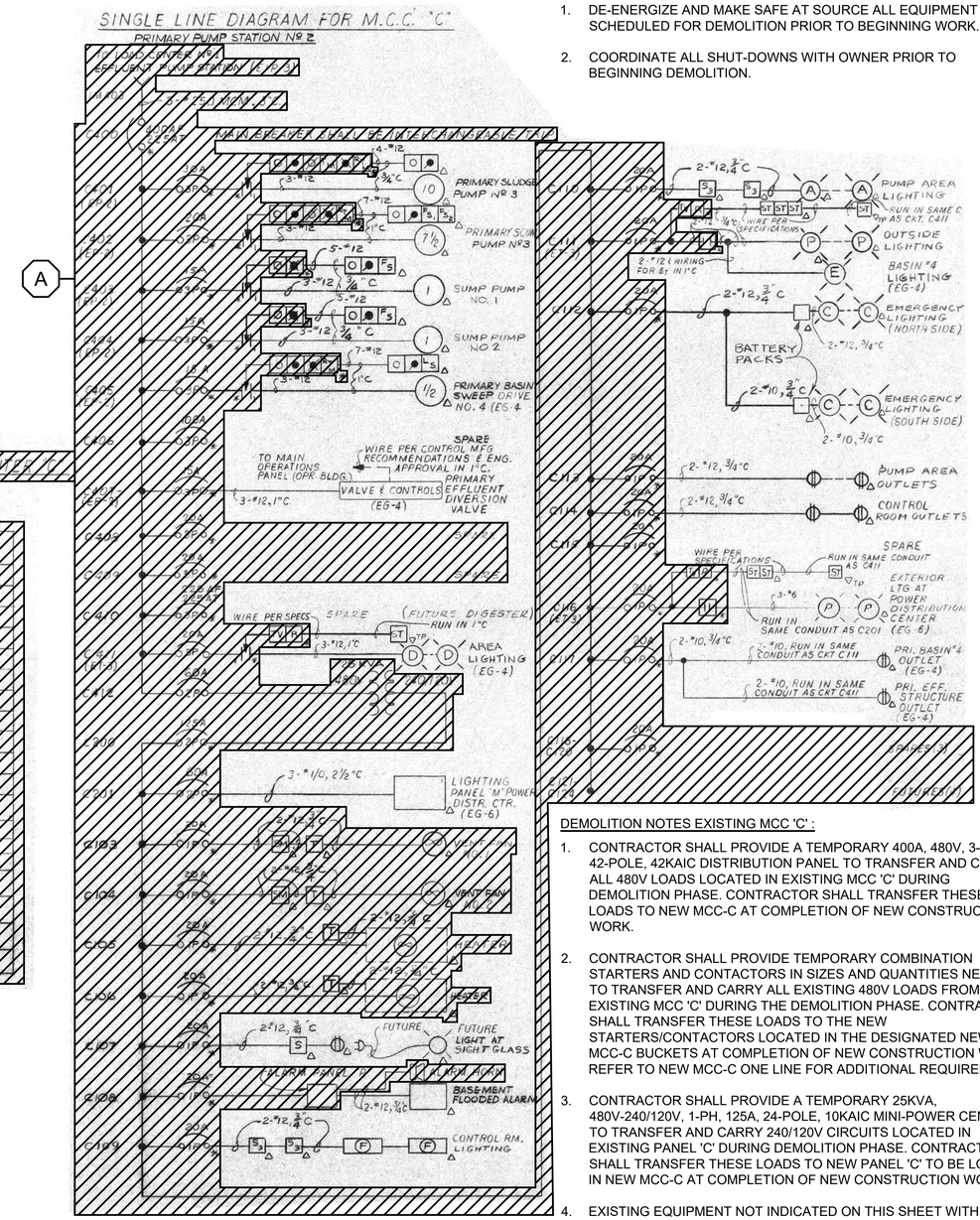

GENERAL DEMOLITION NOTES:

1. DE-ENERGIZE AND MAKE SAFE AT SOURCE ALL EQUIPMENT SCHEDULED FOR DEMOLITION PRIOR TO BEGINNING WORK.
2. COORDINATE ALL SHUT-DOWNS WITH OWNER PRIOR TO BEGINNING DEMOLITION.

DEMOLITION NOTES EXISTING MCC 'C' :

1. CONTRACTOR SHALL PROVIDE A TEMPORARY 400A, 480V, 3-PH, 42-POLE, 42KAIC DISTRIBUTION PANEL TO TRANSFER AND CARRY ALL 480V LOADS LOCATED IN EXISTING MCC 'C' DURING DEMOLITION PHASE. CONTRACTOR SHALL TRANSFER THESE LOADS TO NEW MCC-C AT COMPLETION OF NEW CONSTRUCTION WORK.
2. CONTRACTOR SHALL PROVIDE TEMPORARY COMBINATION STARTERS AND CONTACTORS IN SIZES AND QUANTITIES NEEDED TO TRANSFER AND CARRY ALL EXISTING 480V LOADS FROM EXISTING MCC 'C' DURING THE DEMOLITION PHASE. CONTRACTOR SHALL TRANSFER THESE LOADS TO THE NEW STARTERS/CONTACTORS LOCATED IN THE DESIGNATED NEW MCC-C BUCKETS AT COMPLETION OF NEW CONSTRUCTION WORK. REFER TO NEW MCC-C ONE LINE FOR ADDITIONAL REQUIREMENTS.
3. CONTRACTOR SHALL PROVIDE A TEMPORARY 25KVA, 480V-240/120V, 1-PH, 125A, 24-POLE, 10KAIC MINI-POWER CENTER TO TRANSFER AND CARRY 240/120V CIRCUITS LOCATED IN EXISTING PANEL 'C' DURING DEMOLITION PHASE. CONTRACTOR SHALL TRANSFER THESE LOADS TO NEW PANEL 'C' TO BE LOCATED IN NEW MCC-C AT COMPLETION OF NEW CONSTRUCTION WORK.
4. EXISTING EQUIPMENT NOT INDICATED ON THIS SHEET WITH DEMO HATCH SHALL BE PROTECTED IN PLACE INCLUDING ASSOCIATED FIELD INSTRUMENTS, CONTROL STATIONS, CONDUIT AND WIRE BACK TO SOURCE.

INDICATES EQUIPMENT TO BE DEMOLISHED

SCOPE OF WORK KEY NOTES:

A PACKAGE A - S2 RE-FEED

NO.	DATE	REVISION	BY	APVD

VERIFY SCALE
BAR IS ONE INCH ON ORIGINAL DRAWING.
0 1"
IF NOT ONE INCH ON THIS SHEET, ADJUST SCALES ACCORDINGLY.

DESIGN TCA
DRAWN TCA
CHECKED BGY
APPROVED JHM

WATERWORKS ENGINEERS

provo WELCOME HOME

PROVO CITY
PUBLIC WORKS DEPT
PROVO WRF
PHASE 1, ELEC. UPGRADES
PACKAGE A - S2 RE-FEED

DEMOLITION
SLUDGE PUMP STATION NO. 2
MOTOR CONTROL CENTER MCC-C
PLAN AND ONE LINE DIAGRAM

LICENSED PROFESSIONAL ENGINEER
BRIAN G. YOUNG
NO.8841511
02/26/2025
STATE OF UTAH

DATE FEBRUARY 2025
PROJECT NUMBER 19-002
DRAWING NUMBER D-GN-002
SHEET OF

GENERAL HVAC NOTES:

1. SIZES OF EQUIPMENT PADS INDICATED ON THE DRAWINGS ARE APPROXIMATE. EXACT DIMENSIONS SHALL BE DETERMINED BY THE CONTRACTOR FOR THE EQUIPMENT FURNISHED. ALL FLOOR MOUNTED EQUIPMENT SHALL BE SET ON CONCRETE PADS CONFORMING TO DETAILS SHOWN ON THE TYPICAL STRUCTURAL DRAWINGS AND STANDARD DETAILS.
2. DIELECTRIC COUPLINGS, FLANGES, OR UNIONS SHALL BE INSTALLED AT ALL CONNECTIONS OF COPPER PIPE TO OTHER TYPES OF METALLIC PIPING.
3. HVAC PIPING AND DUCTWORK DRAWINGS DO NOT SHOW ALL DRAINS, VENTS, OFFSETS, AND FITTINGS ETC. REQUIRED FOR THE COMPLETE SYSTEM. SMALL PIPING IS SHOWN APPROXIMATELY TO SCALE, BUT NOT EVERY FITTING AND OFFSET IS SHOWN.
4. THE CONTRACTOR SHALL FURNISH, INSTALL, AND TEST ALL HVAC SYSTEMS TO PROVIDE THE COMPLETE SYSTEM.
5. UNLESS OTHERWISE SHOWN ON THE DRAWINGS ALL FLOOR SLABS AND WALL PENETRATIONS SHALL BE AS SHOWN ON THE TYPICAL DETAILS.
6. NOT ALL AND ONLY CERTAIN TYPES OF SUPPORTS ARE SHOWN ON THE HVAC DRAWINGS. UNLESS OTHERWISE DETAILED ON THE DRAWINGS ALL PIPE AND DUCT SUPPORTS SHALL BE DESIGNED, FURNISHED AND INSTALLED BY THE CONTRACTOR AS SPECIFIED.
7. TYPICAL DETAILS SHALL BE USED FOR ALL PERMANENT WORK EVEN THOUGH THEY ARE NOT CALLED OUT AT ALL LOCATIONS WHERE THEY APPLY.
8. PROVIDE TURNING VANES IN ALL ELBOWS. (SHOWN OR NOT).
9. PROVIDE FLEXIBLE CONNECTION TO HVAC EQUIPMENT, UNLESS OTHERWISE NOTED ON DRAWINGS OR SPECIFICATIONS.
10. DUCTWORK DIMENSIONS NOTED ARE FOR INSIDE DUCT MEASUREMENTS.
11. PROVIDE A COPY OF A CERTIFIED AIR BALANCE REPORT TO THE OWNER PRIOR TO THE FINAL INSPECTION. THIS REPORT NEEDS TO BE CONDUCTED BY A THIRD PARTY CERTIFIED TO CONDUCT AN AIR BALANCE AND IS APPROVED BY THE ENGINEER OF RECORD. THE REPORT SHALL DEMONSTRATE THAT THE MECHANICAL SYSTEM WILL MEET THE DESIGN CALCULATIONS AS INDICATED IN THE CONTRACT DOCUMENTS.
12. ALL HVAC WORK SHALL BE COORDINATED WITH OTHER DISCIPLINES.
13. ALL CUTTING AND PATCHING OF WALLS, FLOORS AND ROOFS, AS REQUIRED TO INSTALL DUCTWORK, EQUIPMENT, ETC. SHALL BE THE RESPONSIBILITY OF THE CONTRACTOR.
14. THE CONTRACTOR SHALL PROVIDE ALL METHODS AND MATERIALS FOR SUPPORTING ALL EQUIPMENT AND DUCTWORK FURNISHED UNDER THIS CONTRACT. IN AREAS OF BAR JOIST CONSTRUCTION ALL PIPING, DUCTWORK, AND SUSPENDED EQUIPMENT WITH A CONCENTRATED LOAD (I.E. HANGERS IN EXCESS OF 150 LBS SHALL BE SUPPORTED FROM THE TOP CHORD OF THE BAR JOIST. DO NOT HANG ANY PIPING OR DUCTWORK FROM THE ROOF DECK.
15. VERIFY THE FINAL MOUNTING HEIGHTS AND LOCATIONS OF LOUVERS, BRICK VENTS, CABINET HEATERS, SIDEWALL GRILLES AND RESISTERS, AND ALL OTHER VISIBLE EQUIPMENT WITH THE ARCHITECTURAL INTERIOR AND EXTERIOR ELEVATIONS.
16. ALL ADJUSTABLE THERMOSTATS, SENSORS AND SWITCHES INTENDED FOR NORMAL USE BY THE BUILDING'S OCCUPANTS SHALL BE MOUNTED 48 INCHES AT FINISHED FLOOR TO THE TOP OF THE DEVICE IN ACCORDANCE WITH ADA REQUIREMENTS.
17. DO NOT UTILIZE HVAC EQUIPMENT FURNISHED UNDER THIS CONTRACT AS A MEANS OF TEMPORARY HEAT DURING CONSTRUCTION. OBTAIN WRITTEN APPROVAL FROM THE ENGINEER OR OWNER PRIOR TO PLACING EQUIPMENT IN SUSTAINED OPERATION.
18. PROVIDED ELEVATIONS ARE FOR REFERENCE ONLY, FINAL ELEVATIONS ARE SUBJECT TO ACTUAL FIELD CONDITIONS. FIELD VERIFY CLEARANCES AND DIMENSIONS PRIOR TO FABRICATING AND INSTALLING DUCTWORK AND EQUIPMENT. COORDINATE DUCT AND EQUIPMENT INSTALLATIONS WITH ALL OTHER TRADES TO AVOID INTERFERENCE WITH LIGHT FIXTURES, STRUCTURES, ETC.
19. PROVIDE SECURITY BARS ON PENETRATIONS 18 INCHES AND LARGER AS INDICATED ON DRAWINGS.
20. FIRE SYSTEM CONTROLS: THE CERTIFIED FIRE PROTECTION ALARM SYSTEM SUPPLIER / INSTALLER SHALL PROVIDE ALL NECESSARY PROGRAMMING, CONDUIT AND WIRE, CONTACTS/RELAYS AND ANY ADDITIONAL EQUIPMENT NECESSARY TO PROVIDE A COMPLETE SHUTDOWN OF ALL HVAC EQUIPMENT IN THE EVENT OF AN ALARM EVENT.
21. THIS SCOPE WILL INCLUDE ANY REQUIRED MODIFICATIONS OF AN EXISTING OR NEW FACP PANELS AND FIRE ALARM SYSTEM TO INTERFACE WITH HVAC EQUIPMENT STARTERS AND CONTROLLERS.
22. THE FIRE ALARM SYSTEM SUPPLIER SHALL COORDINATE WITH THE HVAC CONTRACTOR TO ENSURE A COMPLETE SHUTDOWN OF THEIR EQUIPMENT DURING A FIRE ALARM EVENT.
23. THE HVAC CONTRACTOR WILL INSURE THAT A SHUTDOWN SIGNAL RECEIVED AT ALL HVAC EQUIPMENT ARE EFFECTIVELY SHUT DOWN WITH ALL COMPONENTS OF THAT EQUIPMENT.

NO.	DATE	REVISION	BY	APVD
-	-	-	-	-

HVAC SYMBOLS

- AD — ACCESS DOOR, VERTICAL OR HORIZONTAL
- FLEXIBLE CONNECTION
- OR — FLEXIBLE DUCTWORK
- TRANSITION ROUND TO SQUARE
- TURNING VANES (RECTANGULAR)
- TURNING VANES (RECTANGULAR), SMOOTH RADIUS
- GOOSENECK HOOD (COWL)
- VANES-EXTRACTOR
- DH-01 — DUCT HEATER
- DIRECTION OF SUPPLY AIR FLOW
- DIRECTION OF RETURN AIR FLOW
- UC — DOOR UNDERCUT
- EXHAUST-CEILING
- FLOW CONTROL VALVE
- FS — FLOW SWITCH
- T, T/AHU-01 — REMOTE THERMOSTAT
- F — AIR FILTER
- AFM — AIRFLOW MONITOR
- AUTOMATIC AIR VENT
- BALL VALVE-NORMALLY CLOSED
- DPS — DIFFERENTIAL PRESSURE SWITCH
- S, S/EF-01 — CONTROL SWITCH
- SUCTION DIFFUSER
- DUCT SMOKE DETECTOR
- SD — SMOKE DETECTOR
- FAN - BLOWER
- POWER OR GRAVITY ROOF VENTILATOR - EXHAUST (ERV)
- POWER OR GRAVITY ROOF VENTILATOR (SRV)
- T — DUCT THERMOSTAT
- H — DUCT HUMIDISTAT
- INTERNALLY INSULATED SHEET METAL DUCT
- HIDDEN SHEET METAL DUCT
- H, H/EC-01 — HUMIDISTAT (ELECTRIC)
- ROUND ELBOW UP
- ROUND ELBOW DOWN

DUCT LINEWORK LEGEND

	SUPPLY	RETURN	EXHAUST
DUCT THRU ROOF OR FLOOR			
DUCT UP			
DUCT DOWN			

DAMPERS

- VOLUME DAMPER — VD
- FIRE DAMPER (VERTICAL)
- MOTORIZED — M
- SMOKE DAMPER (VERTICAL)
- COMBINATION SMOKE / FIRE DAMPER WITH SMOKE DETECTION (VERTICAL)
- FIRE DAMPER (HORIZONTAL)
- SMOKE DAMPER (HORIZONTAL)
- COMBINATION SMOKE / FIRE DAMPER WITH SMOKE DETECTION (HORIZONTAL)
- BACKDRAFT — BDD

REGISTERS OR GRILLES

SUPPLY | RETURN | EXHAUST

- CEILING
- SIDEWALL
- FLOOR GRILLE (SUPPLY & RETURN)
- INTAKE LOUVERS
- LINEAR DIFFUSER (SUPPLY & RETURN)
- TRANSFER GRILLE

SUPPLY GRILLE /SUPPLY DIFFUSER /SUPPLY REGISTER

SG/SD/SR	
CFM	LxW

FLOW — LENGTH AND WIDTH

DOOR GRILLE / LOUVER

DG	
CFM	FA

FLOW — FREE AREA

DUCT DIMENSIONS

10x18

DUCT SIDE SHOWN — OTHER SIDE OF DUCT

DUCT HEIGHT

TOP OF DUCT — T 10'-0"

BOTTOM OF DUCT / EQUIPMENT — B 9'-4"

- TD 6" — TOP OF DUCT FITTING DOWN 6"
- TU 6" — TOP OF DUCT FITTING UP 6"
- BD 6" — BOTTOM OF DUCT FITTING DOWN 6"
- BU 6" — BOTTOM OF DUCT FITTING UP 6"

LICENSED PROFESSIONAL ENGINEER
JENNIFER CALDERON
12284243-2202
02/26/2025
STATE OF UTAH

VERIFY SCALE
BAR IS ONE INCH ON ORIGINAL DRAWING.
0 1"
IF NOT ONE INCH ON THIS SHEET ADJUST SCALES ACCORDINGLY.

DESIGN MC
DRAWN NCR
CHECKED MC
APPROVED JHM

WATERWORKS ENGINEERS

provo WELCOME HOME

PROVO CITY
PUBLIC WORKS DEPT
PROVO WRF
PHASE 1, ELEC. UPGRADES
PACKAGE A - S2 RE-FEED

HVAC
HVAC LEGEND

DATE FEBRUARY 2025
PROJECT NUMBER 19-002
DRAWING NUMBER H-GN-001
SHEET: OF

FILE PATH: W:\CAD\Projects\19-002 Provo WATRR Phase 1_{S}\Project Files\Primary Sludge Pump Station NO. 2\06 3D Models\19-02 GENERAL.rvt

PLOT DATE AND TIME: 2/26/2025 12:37:43 PM

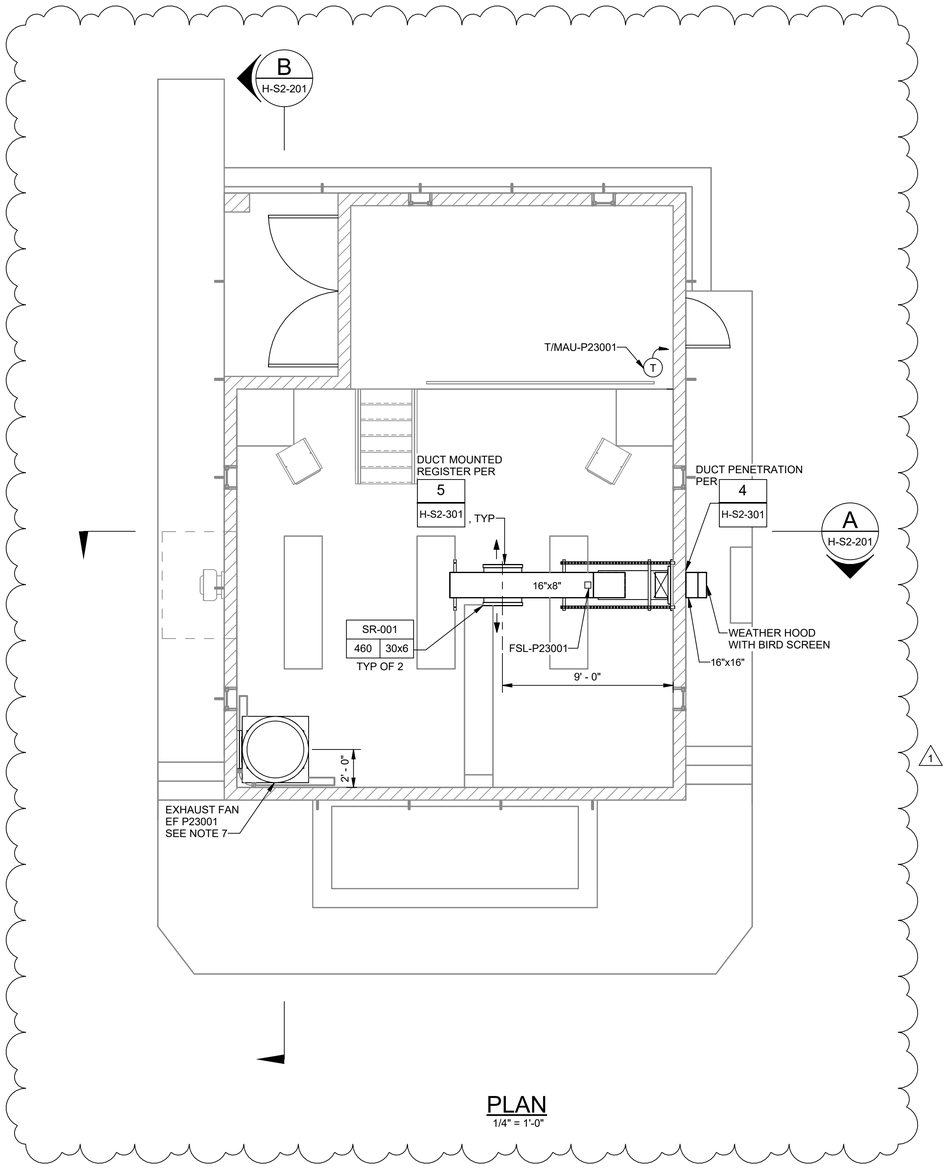

PLAN
1/4" = 1'-0"

NORTH

NOTES:

1. DEMOLISH CURRENT WALL EXHAUST FANS. COORDINATE WITH ELECTRICAL FOR THE ELECTRICAL CONNECTIONS TO THESE EXHAUST FANS.
2. ALL DUCTWORKS SHOULD BE MADE OF ALUMINUM. OUTDOOR DUCTS SHOULD BE INSULATED.
3. SUPPLY FAN SF-P23001 SHOULD HAVE INTERLOCK WITH THE EXHAUST FAN (EF-P23001).
4. WHEN BALANCING THE SYSTEM, ENSURE THAT THE PRESSURE INSIDE THE BUILDING IS NEGATIVE PRESSURE BUT DOES NOT EXCEED -0.1 IN WG.
5. DEMOLISH EXISTING DOORS AND INSTALL NEW METAL DOORS THAT MEET THE SPECIFIED CRITERIA:
   - NEW DOORS SHOULD HAVE A SITE LIGHT.
   - NO LOUVERS SHOULD BE PRESENT ON THE DOORS.
   - PROVIDE PANIC BAR FOR EACH DOOR FOR EASY EXIT DURING EMERGENCIES.
6. THE DIMENSIONS AND ELEVATIONS DEPICTED ARE DERIVED FROM THE RECORD DRAWINGS; THE CONTRACTOR IS RESPONSIBLE FOR ON-SITE VERIFICATION OF ELEVATIONS AND DIMENSIONS.
7. SECURE THE CURB TO THE ROOF AND INTEGRATE IT WITH THE EXISTING ROOFING SYSTEM USING FLASHING AND SEALANT. APPLY NEW ROOFING MATERIALS AROUND THE CURB, PROPERLY SEAL ALL EDGES, AND ENSURE PROPER DRAINAGE TO PREVENT LEAKS.

1

4 0 4 8 FEET
SCALE 1/4"=1'-0"

LICENSED PROFESSIONAL ENGINEER
JENNIFER CALDERON
12284243-2202
02/26/2025
STATE OF UTAH

NO.	DATE	REVISION	BY	APVD
1	2/26/24	CHANGES AFTER 90% DESIGN	-	-

VERIFY SCALE
BAR IS ONE INCH ON ORIGINAL DRAWING.
0 1"
IF NOT ONE INCH ON THIS SHEET, ADJUST THE SCALES ACCORDINGLY.

DESIGN MC
DRAWN DS
CHECKED MC
APPROVED JHM

WATERWORKS ENGINEERS

provo WELCOME HOME

PROVO CITY
PUBLIC WORKS DEPT
PROVO WRF
PHASE 1, ELEC. UPGRADES
PACKAGE A - S2 RE-FEED

HVAC
PRIMARY SLUDGE
PUMP STATION NO. 2
PLAN

DATE
FEBRUARY 2025
PROJECT NUMBER
19-002
DRAWING NUMBER
H-S2-101
SHEET: OF

FILE PATH: C:\Temp\Revit\19-02 HVAC_detached_jesusmAT356.rvt

PLOT DATE AND TIME: 2/26/2025 1:05:27 PM

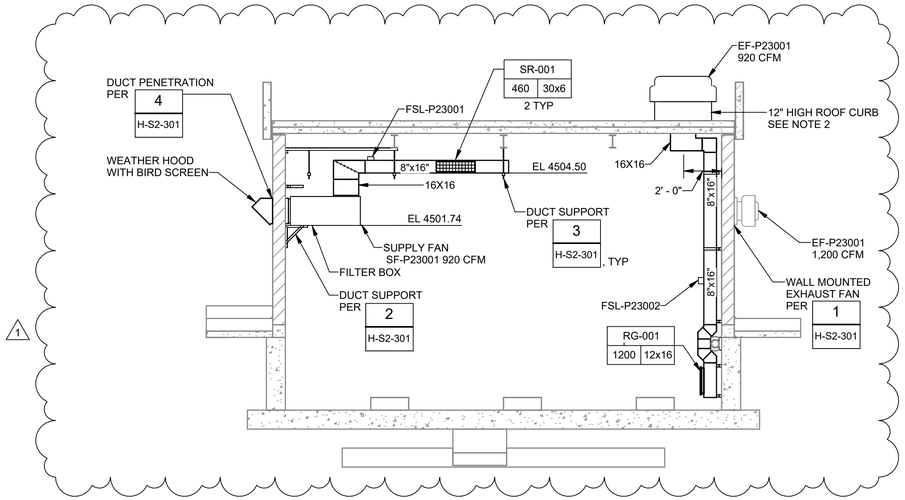

A SECTION
H-S2-101 1/4" = 1'-0"

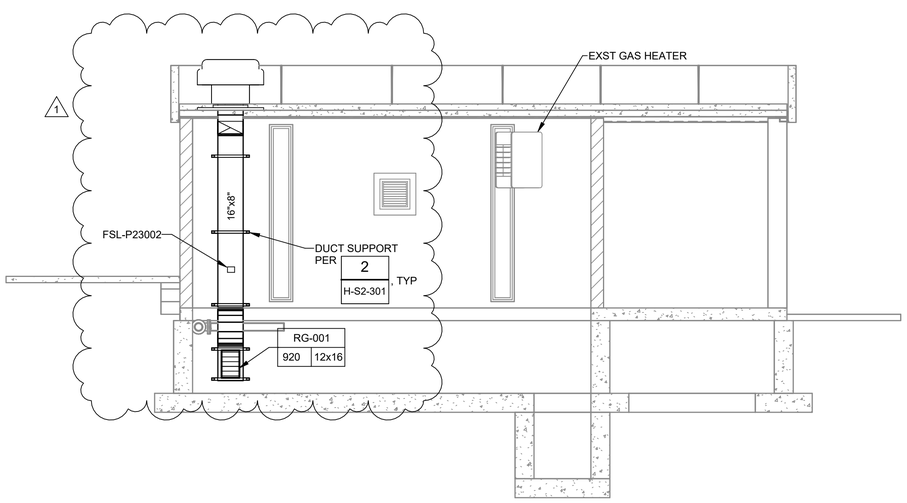

B SECTION
H-S2-101 1/4" = 1'-0"

NOTES:

1. THE DIMENSIONS AND ELEVATIONS DEPICTED ARE DERIVED FROM THE RECORD DRAWINGS; THE CONTRACTOR IS RESPONSIBLE FOR ON-SITE VERIFICATION OF ELEVATIONS AND DIMENSIONS.
2. SECURE THE CURB TO THE ROOF AND INTEGRATE IT WITH THE EXISTING ROOFING SYSTEM USING FLASHING AND SEALANT. APPLY NEW ROOFING MATERIALS AROUND THE CURB, PROPERLY SEAL ALL EDGES, AND ENSURE PROPER DRAINAGE TO PREVENT LEAKS.

4 0 4 8 FEET
SCALE 1/4"=1'-0"

NO.	DATE	REVISION	BY	APVD
1	2/26/24	CHANGES AFTER 90% DESIGN	-	-

VERIFY SCALE
BAR IS ONE INCH ON ORIGINAL DRAWING.
0 1"
IF NOT ONE INCH ON THIS SHEET, ADJUST SCALES ACCORDINGLY.

DESIGN MC
DRAWN DS
CHECKED MC
APPROVED JHM

WATERWORKS ENGINEERS

provo WELCOME HOME

PROVO CITY
PUBLIC WORKS DEPT
PROVO WRF
PHASE 1, ELEC. UPGRADES
PACKAGE A - S2 RE-FEED

HVAC
PRIMARY SLUDGE PUMP STATION NO. 2 SECTIONS

LICENSED PROFESSIONAL ENGINEER
JENNIFER CALDERON
12284243-2202
02/26/2025
STATE OF UTAH

DATE FEBRUARY 2025
PROJECT NUMBER 19-002
DRAWING NUMBER H-S2-201
SHEET: OF

FILE PATH: C:\Temp\Revit\19-02 HVAC_detached_jesusmAT356.rvt

PLOT DATE AND TIME: 2/26/2025 1:05:34 PM

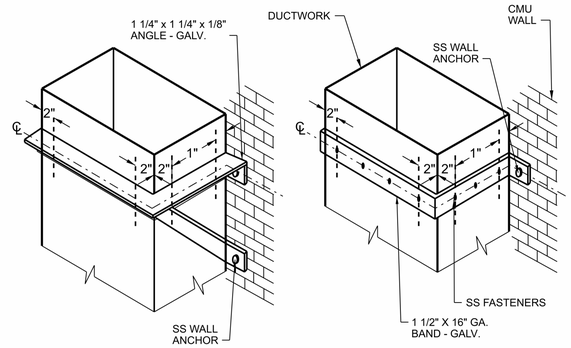

NOTES:

1. MINIMUM NUMBER OF FASTENERS OF 3 ON 24" WIDTH AND UP, ALONG SIDES NEAREST ANCHORS.
2. BRACKETS ARE SIZED FOR 12 FEET OF DUCT, MAX SPACING.
3. LOCATE DUCTS AGAINST WALL OR MAX OF 2" FROM WALL.
4. REFERENCE: SMACNA HVAC DUCT INSTRUCTION STANDARDS METAL AND FLEXIBLE. FIGURE 4-8.

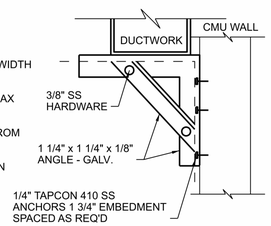

2 HVAC WALL DUCT SUPPORT

H-S2-201 NTS

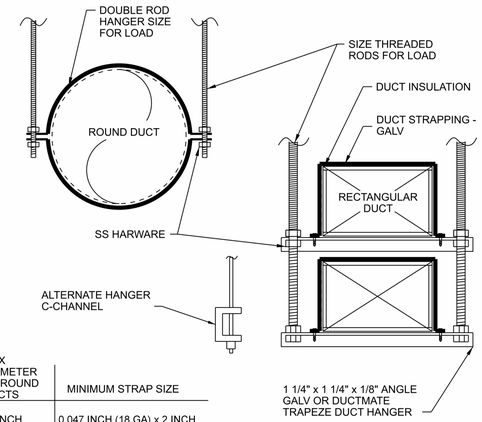

MAX DIAMETER OF ROUND DUCTS	MINIMUM STRAP SIZE
10 INCH	0.047 INCH (18 GA) x 2 INCH WIDTH
20 INCH	0.058 INCH (16 GA) x 2 INCH WIDT
40 INCH	1/8 STEEL x 1-1/2 INCH WIDT
60 INCH	1/8 INCH STEEL x 2 INCH WIDTH
>60 INCH	3/16 INCH STEEL x 2 INCH WIDTH

NOTES:

1. RECTANGULAR DUCT HANGERS CAN BE FABRICATED FROM UNISTRUT-GALV.
2. TRAPEZE MEMBERS ARE NOT TO EXCEED MANUFACTURER'S RECOMMENDED LOADS.
3. REFERENCE: SMACNA SEISMIC RESTRAINT MANUAL FOR ADDITIONAL REINFORCEMENT REQUIRED BY PROJECT.
4. REFERNCE: SMACNA HVAC DUCT CONSTRUCTION STANDARDS METAL AND FLEXIBLE FIGURE 4-4.

3 DUCT SUPPORT

H-S2-201 NTS

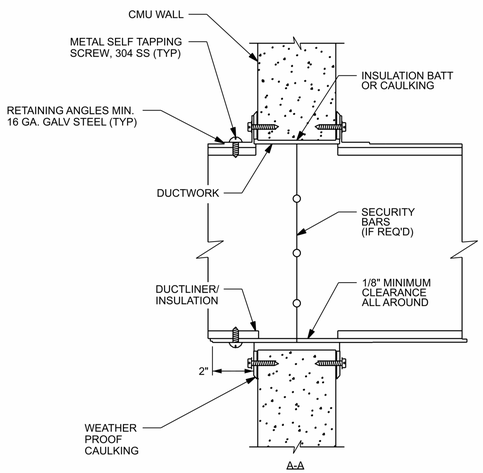

NOTES:

1. PROVIDE TAPCON SS ANCHOR MIN 1/4", SIZED AS RECOMMENDED.
2. RETAINING ANGLES SIZED TO LAP DUCT A MIN OF 1-1/2" AND LAP WALL SURFACES OF A MIN. OF 1". SHEET METAL SELF TAPPING SCREWS SPACED A MAX. OF 1" FROM EACH END OF DUCT AND SPACED A MAX. OF 6" ON CENTER.

4 DUCT THRU WALL

H-S2-201 NTS

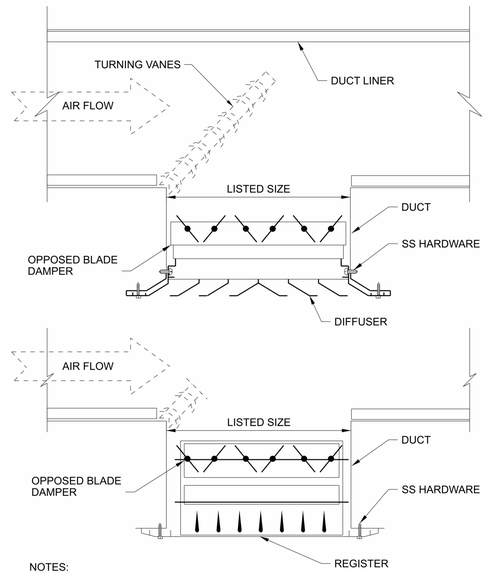

NOTES:

1. PROVIDE SPACING AS REQUIRED FOR DIFFUSER OR REGISTER / GRILLE.
2. PROVIDE TURNING VANES UNLESS OTHERWISE NOTED.

5 DUCT MOUNTED DIFFUSER/ REGISTER

H-S2-101 NTS

NO.	DATE	REVISION	BY	APVD
-	-	-	-	-

VERIFY SCALE
BAR IS ONE INCH ON ORIGINAL DRAWING.
0 1"
IF NOT ONE INCH ON THIS SHEET, ADJUST SCALES ACCORDINGLY.

DESIGN MC
DRAWN NCR
CHECKED MC
APPROVED JHM

WATERWORKS ENGINEERS

provo WELCOME HOME

PROVO CITY
PUBLIC WORKS DEPT
PROVO WRF
PHASE 1, ELEC. UPGRADES
PACKAGE A - S2 RE-FEED

HVAC
DETAILS

LICENSED PROFESSIONAL ENGINEER
JENNIFER CALDERON
12284243-2202
02/26/2025
STATE OF UTAH

DATE FEBRUARY 2025
PROJECT NUMBER 19-002
DRAWING NUMBER H-S2-301
SHEET: OF

FILE PATH: W:\CAD\Projects\19-002 Provo WATRR Phase 1_{S}\Project Files\Primary Sludge Pump Station NO. 2\06 3D Models\19-02 GENERAL.rvt

PLOT DATE AND TIME: 2/26/2025 12:37:44 PM

NOTES:

1. INSTALL A METAL PLATE, CUT TO APPROPRIATE SIZE, ENSURING IT EXTENDS AT LEAST 1 INCH BEYOND THE OPEING ON ALL SIDES. SECURE IT WITH MECHANICAL FASTENERS AND SEAL THE EDGS WITH AN PROPRIATE SEALANT TO PREVENT AIR AND WATER PENETRATION.

1

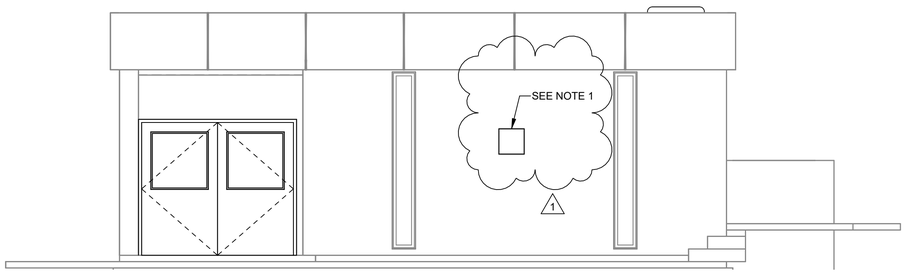

WEST ELEVATION

1/4" = 1'-0"

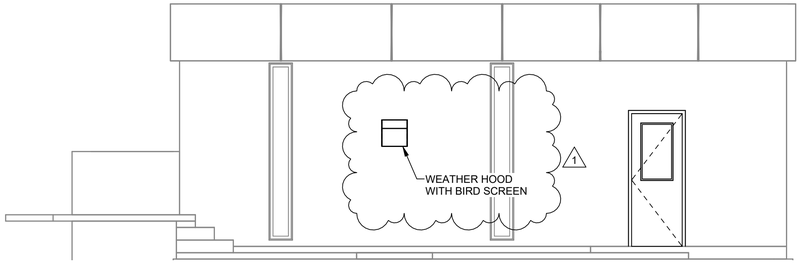

EAST ELEVATION

1/4" = 1'-0"

4 0 4 8 FEET

SCALE 1/4"=1'-0"

LICENSED PROFESSIONAL ENGINEER
JENNIFER CALDERON
12284243-2202
02/26/2025
STATE OF UTAH

NO.	DATE	REVISION	BY	APVD
1	2/26/24	CHANGES AFTER 90% DESIGN	-	-

VERIFY SCALE

BAR IS ONE INCH ON ORIGINAL DRAWING. 0 1" IF NOT ONE INCH ON THIS SHEET, ADJUST THE SCALES ACCORDINGLY.

DESIGN MC
DRAWN DS
CHECKED MC
APPROVED JHM

WATERWORKS ENGINEERS

provo WELCOME HOME

PROVO CITY
PUBLIC WORKS DEPT
PROVO WRF
PHASE 1, ELEC. UPGRADES
PACKAGE A - S2 RE-FEED

HVAC
PRIMARY SLUDGE
PUMP STATION NO. 2
ELEVATIONS

DATE FEBRUARY 2025
PROJECT NUMBER 19-002
DRAWING NUMBER H-S2-401
SHEET: OF

FILE PATH: C:\Temp\Revit\19-02 HVAC_detached_jesusmAT356.rvt

PLOT DATE AND TIME: 2/26/2025 1:05:40 PM

DIFFUSER AND GRILLE SCHEDULE

EQUIPMENT NUMBER	LOCATION	SERVICE	TYPE	AIRFLOW (CFM)	LENGTH (IN)	WIDTH (IN)	QUANTITY	MATERIAL	FINISH	DAMPER TYPE	MANUFACTURER	MODEL	NOTES
SR-001	DUCT MOUNTED	PRIMARY SLUDGE PUMP STATION NO.2	SR	460	24	8	2	AL	MILL	ODB	KRUEGER	5880 22.5 DEGREE	1,2,3,4
RG-001	DUCT MOUNTED	PRIMARY SLUDGE PUMP STATION NO.2	RG	920	16	12	1	AL	MILL	ODB	KRUEGER	S580 HZ	1,2,3

TYPES:

SR-SUPPLY REGISTER
SD-SUPPLY DIFFUSER
RG-RETURN GRILLE
EG-EXHAUST GRILLE
TG-TRANSFER GRILLE
DL-DRUM LOUVER

MATERIAL:

AL -ALUMINUM
GS-GALVANIZED STEEL
SS-STAINLESS STEEL

NOTES:

1. MOUNT EQUIPMENT PER MANUFACTURER'S RECOMMENDATION.
2. PROVIDE STAINLESS STEEL HARDWARE.
3. PROVIDE OPPOSABLE DAMPER BLADES (ODB).
4. PROVIDE EXTRACTOR.

FANS SCHEDULE

EQUIPMENT NUMBER	LOCATION	SERVICE	FAN DATA				ELECTRICAL DATA					WEIGHT (LBS)	MANUFACTURER	MODEL	NOTES
			AIR FLOW (CFM)	E.S.P. (IN W.G.)	FAN SPEED (RPM)	DRIVE	MOTOR HP	MOTOR SPEED (RPM)	V/PH	MCA (AMPS)	MOP (AMPS)				
EF-P23001	OUTDOOR	PRIMARY SLUDGE PUMP STATION NO.2	920	0.25	754	DIRECT	1/2	1300	240/1	5	15	65	GREENHECK	CUE	1 THROUGH 7
SF-P23001	INDOOR	PRIMARY SLUDGE PUMP STATION NO.2	920	0.7	1811	DIRECT	1	2625	240/1	7	15	70	GREENHECK	SQ	1,2,3,4,5,6,8 & 9

NOTES:

1. COORDINATE POWER REQUIREMENTS WITH ELECTRICAL
2. EXHAUST FAN TO BE INTERLOCKED WITH SF-P23001
3. PROVIDE RAINHOOD AND BIRD SCREEN
4. PROVIDE EXTERNAL DISCONNECT
5.PROVIDE CORROSION RESISTANT FASTENERS
6. PROVIDE VARI-GREEM DIAL CONTROL FOR BALANCING
7. PROVIDE ROOF CURB
8. PROVIDE FILTER BOX WITH 2 INCH MERV 13 FILTERS
9. PROVIDE INSULATED HOUSING

NO.	DATE	REVISION	BY	APVD
-	-	-	-	-

LICENSED PROFESSIONAL ENGINEER
JENNIFER CALDERON
12284243-2202
02/26/2025
STATE OF UTAH

VERIFY SCALE
BAR IS ONE INCH ON ORIGINAL DRAWING.
0 1"
IF NOT ONE INCH ON THIS SHEET ADJUST SCALES ACCORDINGLY.

DESIGN MC
DRAWN NCR
CHECKED MC
APPROVED JHM

WATERWORKS ENGINEERS

provo WELCOME HOME

PROVO CITY
PUBLIC WORKS DEPT
PROVO WRF
PHASE 1, ELEC. UPGRADES
PACKAGE A - S2 RE-FEED

HVAC
SCHEDULES

DATE FEBRUARY 2025
PROJECT NUMBER 19-002
DRAWING NUMBER H-S2-600
SHEET: OF

FILE PATH: W:\CAD\Projects\19-002 Provo WATRR Phase 1_{S}\Project Files\Primary Sludge Pump Station NO. 2\06 3D Models\19-02 GENERAL.rvt

PLOT DATE AND TIME: 2/26/2025 12:37:44 PM

SINGLE LINE & CONTROL DIAGRAM SYMBOLS

PUSH BUTTONS

NORMALLY OPEN (NO)	NORMALLY CLOSED (NC)	DESCRIPTION:
PB##	PB##	EMERGENCY STOP PUSH BUTTON WITH RED MUSHROOM HEAD OPERATOR (MAINTAINED CONTACT)
PB##	PB##	PUSH BUTTON, MOMENTARY CONTACT, SPRING RETURN
SSPB##		START/STOP PUSH BUTTON CONTROL STATION, MAINTAINED CONTACT WITH LOCKOUT DEVICE ON STOP

PILOT LIGHTS

PLT## CLR FCN — PUSH TO TEST, 110V S6 LAMP UNLESS NOTED. LETTER IS LENS COLOR:

- R = RED
- A = AMBER
- B = BLUE
- C = CLEAR
- G = GREEN
- Y = YELLOW
- W = WHITE

SELECTOR SWITCHES

PB## A B OX / PB## A B OX	TWO (2) POSITION SELECTOR SWITCH
SS## A B OX XO	TWO (2) POSITION, TWO (2) POLE SELECTOR SWITCH
SS## A B OX XO XO	TWO (2) POSITION, THREE (3) POLE SELECTOR SWITCH
SS## A B C XOO / SS## A B C OOX	THREE (3) POSITION SELECTOR SWITCH
SS## A B C XOO OXO OOX	THREE (3) POSITION, THREE (3) POLE SELECTOR SWITCH
SS## A B C D OXOO / SS## A B C D XOOO	FOUR (4) POSITION SELECTOR SWITCH

SELECTOR SWITCHES

NORMALLY OPEN (NO)	NORMALLY CLOSED (NC)	DESCRIPTION:
SS## A B C D XOOO OXOO OOXO OOOX		FOUR (4) POSITION, FOUR (4) POLE SELECTOR SWITCH

RELAYS

CR## ???	CR## ???	RELAY CONTACT: NORMALLY OPEN (NO) NORMALLY CLOSED (NC)
CR## CR ### ???		CONTROL RELAY COIL NUMBER AS INDICATED
LR##A L NO NC ???		LATCH RELAY COIL
LR##B U NO NC ???		UNLATCH RELAY COIL

LIMIT SWITCHES

FCN LS##	LS## FCN	POSITION (LIMIT) SWITCH
LS## ???	LS## ???	POSITION (LIMIT) SWITCH NO: HELD CLOSED NC: HELD OPEN
TS## ???	TS## ???	TORQUE SWITCH NO: CLOSES ON HIGH TORQUE NC: OPENS ON HIGH TORQUE

PRESSURE & TEMPERATURE SWITCHES

PS## ???	PS## ???	PRESSURE SWITCH NO: CLOSES ON RISING PRESSURE NC: OPENS ON RISING PRESSURE
PSV## V ???	PSV## V ???	VACUUM SWITCH NO: CLOSES ON RISING PRESSURE NC: OPENS ON RISING PRESSURE
DPS## ???	DPS## ???	DIFFERENTIAL PRESSURE SWITCH NO: CLOSES ON RISING DIFFERENTIAL PRESSURE NC: OPENS ON RISING DIFFERENTIAL PRESSURE
TS## ???	TS## ???	TEMPERATURE SWITCH NO: CLOSES ON RISING TEMPERATURE NC: OPENS ON RISING TEMPERATURE

FLOW & LEVEL SWITCHES

NORMALLY OPEN (NO)	NORMALLY CLOSED (NC)	DESCRIPTION:
FLT## ???	FLT## ???	LIQUID LEVEL (FLOAT) NO: CLOSES ON RISING LEVEL NC: OPENS ON RISING LEVEL
FS## ???	FS## ???	FLOW SWITCH (AIR, WATER, ETC.) NO: CLOSES ON INCREASED FLOW NC: OPENS ON INCREASED FLOW

OTHER SWITCHES

AUX## XO ???	AUX## XO ???	AUXILIARY SWITCH CONTACT
TGS### ???	TGS## ???	TOGGLE SWITCH
FTS## FCN	FTS## FCN	FOOT SWITCH
PRS### FCN	PRS### FCN	PROXY SWITCH
PCS## FCN	PCS## FCN	PULL CORD
APL## FCN	APL## FCN	A-PLUG
PE## FCN	PE## FCN	PHOTO EYE
SPDT##A		SINGLE POLE DOUBLE THROW (SPDT) MAINTAIN
SPDT##B		SINGLE POLE DOUBLE THROW (SPDT) RETURN FROM DOWN
SPDT##C		SINGLE POLE DOUBLE THROW (SPDT) RETURN FROM UP
SPDT##D		SINGLE POLE DOUBLE THROW (SPDT) RETURN FROM BOTH

TIMERS

TD## CR ### ?? DELAY NO NC	ON DELAY COIL
TD##A ON DELAY NO NC	ON DELAY MOTOR
TD##A OFF DELAY NO NC	OFF DELAY MOTOR

TIMERS

NORMALLY OPEN (NO)	NORMALLY CLOSED (NC)	DESCRIPTION:
TD## FCN	TD## FCN	ON DELAY NOTC: NORMALLY OPEN TIMED CLOSING, WHEN ENERGIZED NCTO: NORMALLY CLOSED TIMED OPENING, WHEN ENERGIZED
TD## FCN	TD## FCN	OFF DELAY NOTO: NORMALLY OPEN, TIMED OPENING WHEN DEENERGIZED NCTC: NORMALLY CLOSED, TIMED CLOSING WHEN DEENERGIZED

TERMINALS & CONNECTORS

#?	DOT
? ? # #	SQUARE
? ? # #	ROUND
X ? # #	HEXAGON
? ? # #	DIAMOND
? ? # #	TRIANGLE
PDB## L1 L2 L3	POWER DISTRIBUTION BOX
PJ##	PLUG / JACK
PJ##	JACK / PLUG
PJ##	PLUG RIGHT OR UP
PJ##	JACK LEFT OR DOWN
	IN LEFT TOP
	IN BOTH TOP
	OUT RIGHT TOP
	OUT BOTH TOP

MISCELLANEOUS DEVICES

ABE## FCN	BELL
ABU## FCN	BUZZER
AH## FCN	HORN
VM## V FCN	VOLT METER
AM## A FCN	AMP METER
BAT##A - + V OR BAT##B - + V	BATTERY

MISCELLANEOUS DEVICES (CONT)

SINGLE LINE / CONTROL DIAGRAM		DESCRIPTION:
FR## Ω	FR## Ω	FIXED RESISTOR
VR## Ω / VR## Ω	VR## Ω / VR## Ω	VARIABLE RESISTOR
D##	D##	DIODE
ZD##	ZD##	ZENER DIODE
C## ???		CAPACITOR
TVS## TVS ???		SUPPRESSOR
		GROUND
RCPT## ???	RCPT## ???	RECEPTACLES
LT##		ENCLOSURE LIGHT
		GROUND CHASSIS

CONDUITS & CONDUCTORS

	CONDUCTORS NOT CONNECTED
	CONDUCTORS CONNECTED
	CONDUCTOR SHIELD
	CONDUCTOR SHIELD TWISTED PAIR
	FIELD CONDUCTOR SHIELD
	FIELD CONDUCTOR SHIELD TWISTED PAIR
	EARTH GROUND

CONDUITS & CONDUCTORS (CONT)

SINGLE LINE / CONTROL DIAGRAM	DESCRIPTION:
	CHASSIS GROUND
	NEUTRAL
	SEPARABLE CONNECTOR SIFICATION SHOWN.

MOTOR

M## CR ### NO ? NC ? ???	MOTOR STARTER COIL
### HP GEN###	MOTOR
OL MTR###	OVERLOAD
##Ω Ω	RESISTOR OR RESISTIVE ELEMENT
HTR### ???	STRIP HEATER OR HEATING ELEMENT
	HIGH VOLTAGE, GROUP OPERATED, AIR BREAK SWITCH * CONTINUOUS AMPERE RATING
MCR## ??? / MCR## ???	MOTOR CONTACT: NORMALLY OPEN (NO) NORMALLY CLOSED (NC)
CAP##A ???	KVAR CAP
CAP##C ???	THREE PHASE KVAR

NO.	DATE	REVISION	BY	APVD

VERIFY SCALE — BAR IS ONE INCH ON ORIGINAL DRAWING. 0 1" IF NOT ONE INCH ON THIS SHEET, ADJUST SCALES ACCORDINGLY.

DESIGN TCA | DRAWN TCA | CHECKED BGY | APPROVED JHM

WATERWORKS ENGINEERS

provo WELCOME HOME

PROVO CITY
PUBLIC WORKS DEPT
PROVO WRF
PHASE 1, ELEC. UPGRADES
PACKAGE A - S2 RE-FEED

ELECTRICAL

LEGEND 1

LICENSED PROFESSIONAL ENGINEER BRIAN G. YOUNG NO.8841511 02/26/2025 STATE OF UTAH

DATE	FEBRUARY 2025
PROJECT NUMBER	19-002
DRAWING NUMBER	E-GN-001
SHEET	OF

FILENAME: W:\CAD\PROJECTS\19-002 PROVO WATRR PHASE 1_{S}\PROJECT FILES_PHASE 1 ELECTRICAL UPGRADES\07 DRAWINGS\PACKAGE A - S2 RE-FEED\PA-1902D-GN-E001.DWG PLOT DATE: February 26, 2025 PLOT TIME: 11:23 AM

SINGLE LINE, CONTROL DIAGRAM & PLAN SYMBOLS

DISCRETE I/O

SINGLE LINE / CONTROL DIAGRAM	DESCRIPTION:
DI## / DI / FCN	DISCRETE INPUT
DO## / DO / FCN	DISCRETE OUTPUT

ANALOG I/O

AI## / AI / FCN	ANALOG INPUT
AO## / AO / FCN	ANALOG OUTPUT

FUSES & CIRCUIT BREAKERS

SINGLE LINE OR CONTROL DIAGRAM	PLAN VIEW	DESCRIPTION:
##A ??? ##P CB###		THERMAL MAGNETIC CIRCUIT BREAKER TRIP RATING ABOVE; FRAME RATING BELOW. TYPICAL FOR OTHER TYPES OF BREAKERS. BREAKER TO BE 3 POLE UNLESS NOTED OTHERWISE AS 1P OR 2P
###AT ###AF ### CB### ???	N/A	DRAWOUT MEDIUM VOLTAGE POWER BREAKER UPPER NUMBER INDICATES LONG TIME TRIP SETTING LOWER NUMBER INDICATES BREAKER CONTINUOUS CURRENT RATING
##A ???-### ##P ??? Z		COMBINATION MOTOR STARTER WITH MOTOR CIRCUIT PROTECTOR, MAGNETIC CONTACTOR AND OVERLOAD PROTECTION X= AMPERE SIZE Z= NEMA SIZE
Z		MOTOR STARTER WITH MAGNETIC CONTACTOR AND OVERLOAD PROTECTION Z= NEMA SIZE
FU## ##A	N/A	FUSE
FU## ##A	N/A	FUSED SWITCH

TRANSFORMERS

XFMR### ##kVA ###A / ###A ##Ø	TRANSFORMER, RATINGS AND CONNECTIONS AS NOTED. UNLESS OTHERWISE NOTED ON THE ONE LINE DIAGRAMS ALL DRY TYPE TRANSFORMERS SERVICING ADMINISTRATIVE AND LABORATORY SPACES SHALL HAVE A K FACTOR OF 13. ALL OTHER DRY TYPE TRANSFORMERS SHALL HAVE A K-4 RATING. ISOLATION TRANSFORMERS SHALL HAVE A K-20 RATING
XFMR### ##kVA ###A / ###A ##Ø	DUAL TRANSFORMER
###A / ###A XF### (*) ???	CURRENT TRANSFORMER *QUANTITY XXXX = PRIMARY AMPERE RATING
###A / ###A XF### ??? (*)	POTENTIAL TRANSFORMER (PT) OR CONTROL POWER TRANSFORMER (CPT) * QUANTITY XXXX = PRIMARY VOLTAGE RATING
	INDUCTOR

NO.	DATE	REVISION	BY	APVD

POWER EQUIPMENT & DEVICES

SINGLE LINE OR CONTROL DIAGRAM	PLAN VIEW	DESCRIPTION:
DISC# ###AT ###AF	DISC#	NON-FUSIBLE DISCONNECT SWITCH, 600 VOLT, 3 POLE, (###A) AMPERE RATING
##A FU## ##P ???	F DISC###	FUSIBLE DISCONNECT SWITCH, 600 VOLT, 3 POLE, AMPERE RATING AND FUSE SIZE AS NOTED (###A) AMPERE RATING (FU#) FUSE RATING
##A OL ##P MTR###	##P CLR MMS###	MANUAL MOTOR STARTER WITH THERMAL OVERLOAD PROTECTION "CLR" INDICATES WITH PILOT LIGHT "#P" INDICATES NUMBER OF POLES
	N/A	DRAWOUT TYPE EQUIPMENT OR DEVICE
	N/A	MEDIUM VOLTAGE CABLE TERMINATION
TGS### FCN	N/A	MEDIUM VOLTAGE AIR INTERRUPTER SWITCH
#AT	N/A	MEDIUM VOLTAGE FUSED FAULT INTERRUPTER #AT = AUTOTRANSFORMER TYPE
M## M WM T##	N/A	METER (M##) WM - WATT METER WHM - WATT HOUR METER WHDM - WATT HOUR DEMAND METER WHDR - WATT HOUR DEMAND RECORDER PF - POWER FACTOR METER TRANSDUCER (T##) AX - CURRENT TRANSDUCER WX - WATT TRANSDUCER
### HP GEN###	G	GENERATOR WITH GENERATION NUMBER, RATINGS AND CONNECTIONS AS NOTED IN CALL OUT ON DRAWING
### HP MTR### FCN	MTR	MOTOR, NUMERAL INDICATES HORSEPOWER
ATS## ??? S N	ATS-###	AUTOMATIC TRANSFER SWITCH (ATS) "N" INDICATES NORMAL SOURCE "S" INDICATES STANDBY SOURCE #RATE = INDICATES CONTINUOUS CURRENT RATING # = INDICATES ATS NAME
VFD###	VFD-###	AC MOTOR SPEED CONTROLLER (VARIABLE FREQUENCY DRIVE)
SCR###	SCR-###	DC MOTOR SPEED CONTROLLER (SILICON CONTROLLED RECTIFIER)
VM### VS VM (*)	N/A	VOLTMETER WITH SWITCH, 3 PHASE (*) = SCALE
AM### VS AM (*)	N/A	AMMETER WITH SWITCH, 3 PHASE (*) = SCALE
LA## ???	N/A	LIGHTNING ARRESTOR

POWER EQUIPMENT & DEVICES (CONT)

SINGLE LINE OR CONTROL DIAGRAM	PLAN VIEW	DESCRIPTION:
CR## FCN	N/A	NON-FUSIBLE DISCONNECT SWITCH, 600 VOLT, 3 POLE, (###A) AMPERE RATING
TVSS	TVSS	TRANSIENT VOLTAGE SURGE SUPPRESSOR (POWER DISTRIBUTION TYPE)
PLT## CLR FNC	N/A	PUSH TO TEST, 110V S6 LAMP UNLESS NOTED, LETTER IS LENS COLOR: R = RED G = GREEN C = CLEAR A = AMBER Y = YELLOW B = BLUE W = WHITE
SOL## FCN	SOV	SOLENOID OPERATED VALVE
ETM	N/A	ELAPSED TIME METER
UH### ##kW	UH###	UNIT HEATER
WH### ##kW	WH###	WATER HEATER
DM-#### ##kW	DM-####	DAMPER MOTOR
MOV ####	MOV	MOTOR OPERATED VALVE "XXXX" DENOTES LOOP NUMBER TO BE OBTAINED FROM INSTRUMENTATION DRAWINGS
N/A		CONTROL STATION
ITP ITP#### FCN	ITP	INTERMEDIATE TERMINAL PANEL
K	N/A	KEY INTERLOCK
K E	N/A	ELECTRONIC KEY INTERLOCK
		CORD AND PLUG CONNECTION
N/A	T	THERMOSTAT
N/A	OC	OCCUPANCY SENSOR
N/A	PC	PHOTOCELL

POWER EQUIPMENT & DEVICES (CONT)

SINGLE LINE OR CONTROL DIAGRAM	PLAN VIEW	DESCRIPTION:
N/A	ESA	EMERGENCY SHOWER ALARM STATION
OR	N/A	JUMPER
MS	N/A	MOTOR SWITCH
N/A	J	JUNCTION BOX
N/A	PB OR PB	PULL BOX
XXX XXX		FIELD MOUNTED INSTRUMENT: XXX= DESIGNATION TO BE OBTAINED FROM INSTRUMENTATION DRAWINGS

GROUNDING

	GROUND ROD
	GROUND ROD IN GROUNDING WELL
	GROUND ROD IN TEST WELL
	GROUND GRID CABLE CONNECTION, WELDED

SWITCHES

$a	SINGLE POLE SWITCH "a" INDICATES SWITCH LEG SHALL CONTROL LUMINARIES WITH "a" DESIGNATION
$2 b	DOUBLE POLE SWITCH "b" INDICATES SWITCH LEG SHALL CONTROL LUMINARIES WITH "b" DESIGNATION
$3 c	THREE WAY SWITCH "c" INDICATES SWITCH LEG SHALL CONTROL LUMINARIES WITH "c" DESIGNATION
$4 d	FOUR WAY SWITCH "d" INDICATES SWITCH LEG SHALL CONTROL LUMINARIES "d" DESIGNATION
$M	SINGLE POLE, DOUBLE THROW MOMENTARY CONTACT SWITCH, CENTER OFF
$P	SINGLE POLE SWITCH AND PILOT LIGHT

LIGHTING FIXTURES & EQUIPMENT

Ca	LIGHTING CONTACTOR WITH NUMBER OF POLES AS INDICATED a-CONTACTOR NUMBER (C1, C2, ETC.)
TM	TIME SWITCH

LIGHTING FIXTURES & EQUIPMENT (CONT)

PLAN VIEW	DESCRIPTION:
ALCP-#### OR ALCP-###	AREA LIGHTING CONTACTOR PANEL ### = PANEL NAME
LP-#### OR LP-###	LIGHTING PANEL BOARD NO. # (240/120V OR 208/120V) ### = PANEL NAME
PP-#### OR PP-###	POWER DISTRIBUTION PANEL BOARD NO. # (480V OR 480/277V) ### = PANEL NAME
XX X Y a NL	TYPICAL LUMINARIES SEE SCHEDULE FOR SPECIFICS "XX"-FIXTURE TYPE X= PANEL BOARD NAME "b"-CONTROLLED BY SWITCH "b" Y= CIRCUIT NUMBER NL= NIGHT LIGHT (UN-SWITCHED)
NL XX X Y a	WALL MOUNTED LUMINARIE.REFER TO SCHEDULE FOR SPECIFICS. (NOTATIONS SAME AS ABOVE)
?? X Y a	DIRECTIONAL FLOOD LIGHT TYPE LUMINARIES. SEE SCHEDULE FOR SPECIFICS. (NOTATIONS SAME AS ABOVE)
?? X Y a NL	FLUORESCENT TYPE LUMINARIES. SEE SCHEDULE FOR SPECIFICS. (NOTATIONS SAME AS ABOVE)
?? X Y a NL	FLUORESCENT TYPE LUMINARIES. SEE SCHEDULE FOR SPECIFICS. (NOTATIONS SAME AS ABOVE)
##-??-###	INDICATES ALL LUMINARIES WITHIN THE ROOM OR AREA IN WHICH THIS NOTATION APPEARS SHALL BE TYPE "A" UNLESS OTHERWISE NOTED. SEE LIGHTING FIXTURE SCHEDULE FOR TYPES
CLR	ALARM BEACON. COLOR AS NOTED. REFER TO SPECIFICATIONS FOR REQUIREMENTS.
E1 X Y	EMERGENCY LUMINARIES WITH BATTERY PACK "E1" FIXTURE TYPE. REFER TO SCHEDULE FOR SPECIFICS. X= PANEL BOARD NAME Y= CIRCUIT NUMBER
E2 REM X Y	REMOTE EMERGENCY LUMINARIES "E2"-FIXTURE TYPE. REFER TO SCHEDULE FOR SPECIFICS
X Y SP XX	CEILING MOUNTED EXIT SIGN "X1" LUMINAIRE TYPE. REFER TO SCHEDULE FOR SPECIFICS LP-##= PANEL BOARD NAME Y= CIRCUIT NUMBER SP= SELF POWERED
XX X Y SP	WALL OUTLET EXIT SIGN. ARROW INDICATES DIRECTION OF EXCESS "X2" LUMINAIRE TYPE. REFER TO SCHEDULE FOR SPECIFICS. LP-## = PANEL BOARD NAME Y= CIRCUIT NUMBER SP= SELF POWERED

VERIFY SCALE
BAR IS ONE INCH ON ORIGINAL DRAWING.
0 1"
IF NOT ONE INCH ON THIS SHEET, ADJUST SCALES ACCORDINGLY.

DESIGN TCA
DRAWN TCA
CHECKED BGY
APPROVED JHM

WATERWORKS ENGINEERS

provo WELCOME HOME

PROVO CITY
PUBLIC WORKS DEPT
PROVO WRF
PHASE 1, ELEC. UPGRADES
PACKAGE A - S2 RE-FEED

ELECTRICAL

LEGEND 2

BRIAN G. YOUNG
LICENSED PROFESSIONAL ENGINEER
NO.8841511
02/26/2025
STATE OF UTAH

DATE FEBRUARY 2025
PROJECT NUMBER 19-002
DRAWING NUMBER E-GN-002
SHEET OF

PLAN VIEW SYMBOLS

CONDUIT

PLAN VIEW	DESCRIPTION:
	EXPOSED CONDUIT
	HIDDEN / CONCEALED CONDUIT
	UNDERGROUND CONDUIT
EDB EDB	DUCT BANK
OHE OHE	OVERHEAD POWER LINES
GND GND	GROUNDING CONDUCTOR
100	CONDUITS IDENTIFIED BY A NUMBER SHALL BE LISTED IN THE CONDUIT BLOCK DIAGRAM
AA	CONDUITS IDENTIFIED BY LETTERS SHALL CONFORM TO THE TABLES IN THE LEGEND
	CONDUIT STUBBED OUT AND CAPPED
	FLEXIBLE CONDUIT OR MANUFACTURER'S CABLE(S)
	CONDUIT TURNED DOWN
	CONDUIT TURNED UP
	INDICATES LIMITS OF EQUIPMENT OR WIRING ENCLOSURE
XXXX	CONDUIT HOME RUN, XXX DENOTES DESTINATION CONTRACTOR SHALL FIELD ROUTE FROM EQUIPMENT TO DESIGNATED LOCATION
(2)-3"C, 3-#3/0, 1-#2G	DENOTES A QUANTITY OF TWO (2) 3-INCH CONDUITS EACH CONTAINING THREE NO. 3/0 AWG CONDUCTORS AND 1 NO. 2 AWG GROUND CONDUCTOR
2 PR #16 TWSH	DENOTES A QUANTITY OF TWO INSTRUMENT CABLES. EACH CABLE TO CONSIST OF TWO NO. 16 AWG CONDUCTORS TWISTED TOGETHER AND COVERED WITH A METALLIC SHIELD AND AN OVERALL PROTECTIVE JACKET. REFER TO THE SPECIFICATIONS FOR THE EXACT CABLE TO BE PROVIDED.
2 TR #16 TWSH	SAME AS ABOVE EXCEPT CABLE TO CONSIST OF THREE NO. 16 AWG CONDUCTORS TWISTED, SHIELDED AND COVERED WITH AN OVERALL PROTECTIVE JACKET. REFER TO THE SPECIFICATIONS FOR THE EXACT CABLE TO BE PROVIDED.
2 PR #16 TW	DENOTES A QUANTITY OF TWO INSTRUMENT CABLES. EACH CABLE TO CONSIST OF TWO NO. 16 AWG CONDUCTORS TWISTED TOGETHER AND AN OVERALL PROTECTIVE JACKET. REFER TO THE SPECIFICATIONS FOR THE EXACT CABLE TO BE PROVIDED.
(3)-4"C	THREE 4-INCH CONDUITS

NO.	DATE	REVISION	BY	APVD

POWER RECEPTACLES

PLAN VIEW	DESCRIPTION:
##A LP-### Y	208V, 3P, 4W, RECEPTACLE ##A = AMPERE RATING AS NOTED LP-##= PANEL BOARD NUMBER Y= CIRCUIT NUMBER
##A LP-### Y	240V, 20, 3W, RECEPTACLE ##A = AMPERE RATING AS NOTED LP-##= PANEL BOARD NUMBER Y= CIRCUIT NUMBER
##A LP-### Y	FLOOR OUTLET BOX WITH TYPE OUTLET INDICATED
##A LP-### Y	480V, 3P, 4W RECEPTACLE AND DISCONNECT SWITCH ##A = AMPERE RATING AS NOTED X = PANEL BOARD NUMBER Y = CIRCUIT NUMBER
##A GFCI WP X Y	DUPLEX RECEPTACLE, 20A, 120V, 2P, 3W UNLESS OTHERWISE NOTED * =C - MOUNTED ABOVE COUNTERTOP GF - GROUND FAULT INTERRUPTER TYPE WP - WEATHERPROOF T - TRANSIENT VOLTAGE SURGE SUPPRESSER X= PANEL BOARD NUMBER Y= CIRCUIT NUMBER
##A LP-### Y	QUAD RECEPTACLE, 20A, 120V, 2P, 3W UNLESS OTHERWISE NOTED NOTATION SAME AS ABOVE

SECURITY SYSTEM

PLAN VIEW	DESCRIPTION:
KP	SECURITY SYSTEM KEY PAD
CR	SECURITY SYSTEM CARD ACCESS READER
MD	SECURITY ALARM MOTION DETECTOR
CCTV	CLOSED CIRCUIT TV CAMERA

TELECOMMUNICATION SYSTEM

PLAN VIEW	DESCRIPTION:
TTB	TELEPHONE TERMINAL BOARD 4FT X 8FT X 3/4 INCH UNLESS NOTED OTHERWISE
	TELEPHONE OUTLET, WALL TYPE (MOUNT 1'-6" AFF UNO)
	TELEPHONE OUTLET AND FLOOR BOX
	TELEPHONE/DATA OUTLET, WALL TYPE (MOUNT 1'-6" AFF UNO)
	TELEPHONE/DATA OUTLET AND FLOOR BOX
C C1	PAGING SPEAKER, WALL MOUNTED "H1" AND "C1" DENOTES TYPE. H=HORNC=CONE
H2 H H1 H	PAGING SPEAKER, WALL MOUNTED, BIDIRECTIONAL NOTATIONS SAME AS ABOVE

TELECOMMUNICATION SYSTEM (CONT)

PLAN VIEW	DESCRIPTION:
C C2	PAGING SPEAKER, FLUSH MOUNTED CEILING TYPE
S	PAGING STATION, SURFACE MOUNTED
VC	REMOTE WALL MOUNTED VOLUME CONTROL. FOR CEILING SPEAKER (MOUNT UP 5'-0" AFF UNO)
A	PAGING SPEAKER AMPLIFIER ASSEMBLY

FIRE ALARM / LIFE SAFETY

PLAN VIEW	DESCRIPTION:
200 R	FIRE ALARM HEAT DETECTOR 135Y FIXED TEMPERATURE UNLESS OTHER- WISE NOTED. "200" DENOTES 200YF TYPE "R" DENOTES FIXED TEMPERATURE RATE-OF-RISE TYPE.
DSD I	FIRE ALARM DUCT SMOKE DETECTOR PHOTOCELL TYPE UNLESS OTHERWISE NOTED. "I" DENOTES IONIZATION TYPE.
DSD 2	FIRE ALARM DUCT SMOKE DETECTOR
FACP-####	FIRE ALARM CONTROL PANEL
FAVP-####	FIRE ALARM VENTILATION PANEL (WITH GRAPHIC PANEL)
FARAP-####	FIRE ALARM REMOTE ANNUNCIATOR
M WP	FIRE ALARM MANUAL PULL STATION, MOUNT UP 4'-0" WP DENOTES WEATHERPROOF COVER
F	OUTDOOR WEATHERPROOF FIRE ALARM MASTER BOX
F	WP FIRE ALARM SPEAKER, MOUNT UP 7'-8"
S	FIRE ALARM STROBE, WALL MOUNT UP 6'-8" OR AT CEILING
F	FIRE ALARM HORN AND STROBE LIGHT COMBINATION, MOUNT UP 6'-8"
F	FIRE ALARM HORN AND STROBE LIGHT COMBINATION, CEILING MOUNT
	SPRINKLER VALVE SUPERVISORY SWITCH
F	FIRE ALARM BELL

FIRE ALARM / LIFE SAFETY (CONT)

PLAN VIEW	DESCRIPTION:
STB ???	WEATHERPROOF HIGH DENSITY FIRE ALARM STROBE LIGHT
	SPRINKLER FLOW ALARM SWITCH
CM	ADDRESSABLE CONTROL MODULE
MM	ADDRESSABLE MONITOR MODULE
SD	SMOKE DETECTOR

AREA CLASSIFICATION

PLAN VIEW	DESCRIPTION:
DAMP	INDICATES THAT ALL ELECTRICAL EQUIPMENT AND MATERIALS INSTALLED WITHIN THE ROOM OR AREA IN WHICH THIS NOTATION APPEARS SHALL BE OF NEMA 12 CONSTRUCTION (OR GASKETED AND SUITABLE FOR USE IS A WET LOCATION WHERE NEMA STANDARDS DO NOT APPLY) UNLESS OTHERWISE NOTED.
WET	INDICATES THAT ALL ELECTRICAL EQUIPMENT AND MATERIALS INSTALLED WITHIN THE ROOM OR AREA IN WHICH THIS NOTATION APPEARS SHALL BE OF NEMA 4X CONSTRUCTION (OR GASKETED AND SUITABLE FOR USE IN A WET LOCATION WHERE NEMA STANDARDS DO NOT APPLY) UNLESS OTHERWISE NOTED.
CORROSIVE	INDICATES THAT ALL ELECTRICAL EQUIPMENT AND MATERIALS INSTALLED WITHIN THE ROOM OR AREA IN WHICH THIS NOTATION APPEARS SHALL BE OF NEMA 4X CONSTRUCTION (OR GASKETED AND SUITABLE FOR USE IN A WET LOCATION WHERE NEMA STANDARDS DO NOT APPLY) UNLESS OTHERWISE NOTED.
CLASS 1, DIV. 1 GROUP D	INDICATES THAT ALL ELECTRICAL EQUIPMENT AND MATERIALS INSTALLED WITHIN THE ROOM OR AREA IN WHICH THIS NOTATION APPEARS SHALL CONFORM TO N.E.C. REQUIREMENTS FOR THE HAZARDOUS AREA CLASSIFICATION SHOWN.

ABBREVIATIONS

A	AMPS
AC	ALTERNATING CURRENT
AFF	ABOVE FINISHED FLOOR
AHF	ACTIVE HARMONIC FILTER
AIC	AMPS INTERRUPTING CAPACITY
AM	AMMETER
AWG	AMERICAN WIRE GAUGE
CPT	CONTROL POWER TRANSFORMER
DC	DIRECT CURRENT
FU	FUSE
HP	HORSEPOWER
HMCP	HIGH CAPACITY MOTOR CIRCUIT PROTECTOR
KCMIL	THOUSANDS OF CIRCULAR MILS
KV	KILOVOLTS
KVA	KILOVOLT-AMPERES
KW	KILOWATTS
KWH	KILOWATT HOURS
MCP	MOTOR CIRCUIT PROTECTOR
MPR	MULTI-PURPOSE OR MOTOR PROTECTION RELAY
MVA	MEGAVOLT-AMPERES
OL	MOTOR OVERLOADS, THERMAL OR ELECTRONIC
PLC	PROGRAMMABLE LOGIC CONTROLLER
SE	SERVICE ENTRANCE RATED
TB	TERMINAL BLOCK
VFD	VARIABLE FREQUENCY DRIVE
V	VOLTS
VM	VOLTMETER
W	WATTS

VERIFY SCALE
BAR IS ONE INCH ON ORIGINAL DRAWING.
0 1"
IF NOT ONE INCH ON THIS SHEET, ADJUST SCALES ACCORDINGLY.

DESIGN TCA
DRAWN TCA
CHECKED BGY
APPROVED JHM

WATERWORKS ENGINEERS

provo WELCOME HOME

PROVO CITY
PUBLIC WORKS DEPT
PROVO WRF
PHASE 1, ELEC. UPGRADES
PACKAGE A - S2 RE-FEED

ELECTRICAL
LEGEND 3

BRIAN G. YOUNG
LICENSED PROFESSIONAL ENGINEER
NO.8841511
02/26/2025
STATE OF UTAH

DATE FEBRUARY 2025
PROJECT NUMBER 19-002
DRAWING NUMBER E-GN-003
SHEET OF

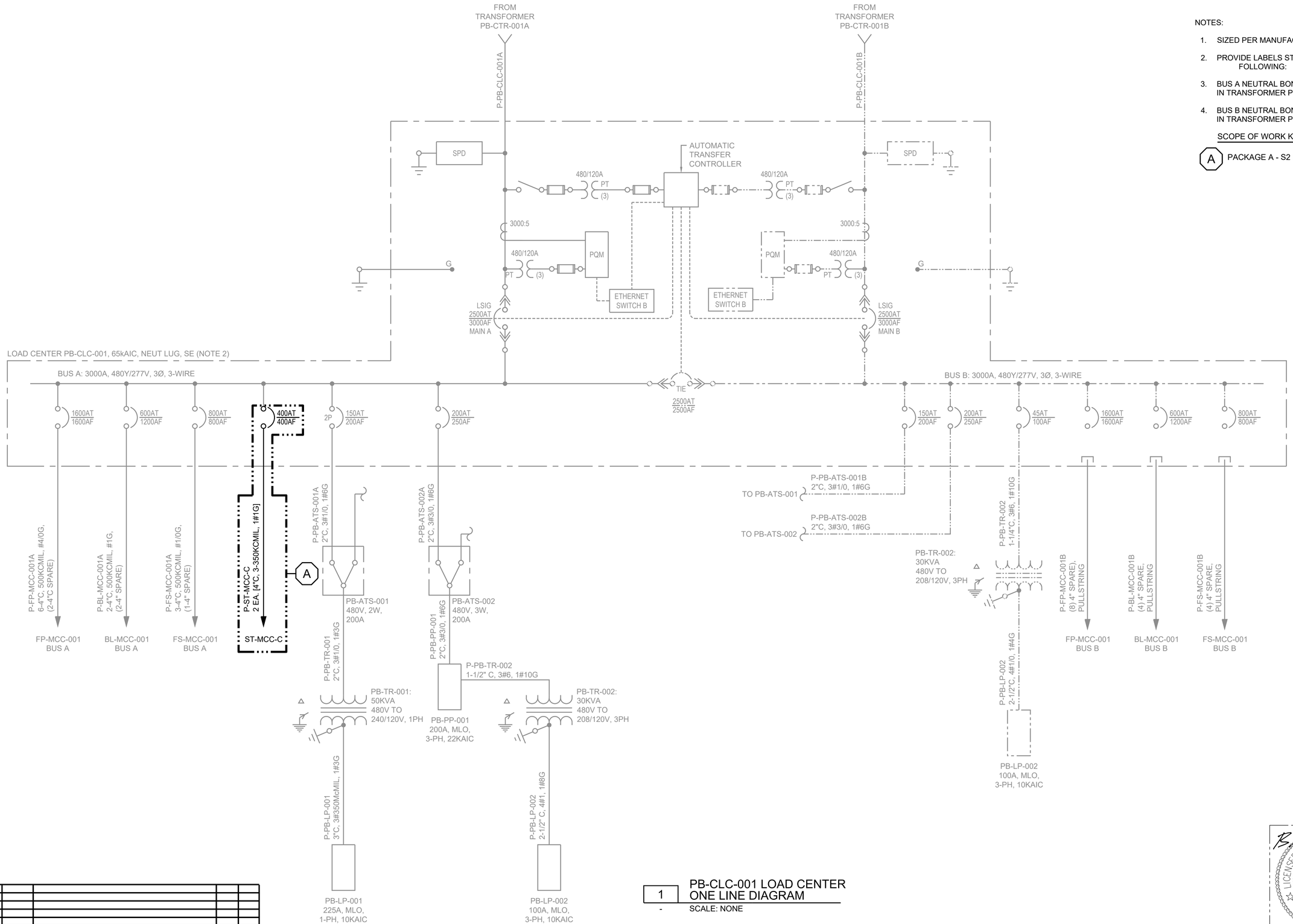

NOTES:

1. SIZED PER MANUFACTURER
2. PROVIDE LABELS STATING THE FOLLOWING:
3. BUS A NEUTRAL BOND LOCATED IN TRANSFORMER PB-CTR-001A.
4. BUS B NEUTRAL BOND LOCATED IN TRANSFORMER PB-CTR-001B.

SCOPE OF WORK KEY NOTES:

A PACKAGE A - S2 RE-FEED

NO.	DATE	REVISION	BY	APVD

1 PB-CLC-001 LOAD CENTER ONE LINE DIAGRAM

- SCALE: NONE

VERIFY SCALE
BAR IS ONE INCH ON ORIGINAL DRAWING.
0 1"
IF NOT ONE INCH ON THIS SHEET, ADJUST SCALES ACCORDINGLY.

DESIGN TCA
DRAWN TCA
CHECKED BGY
APPROVED JHM

WATERWORKS ENGINEERS

provo WELCOME HOME

PROVO CITY
PUBLIC WORKS DEPT
PROVO WRF
PHASE 1, ELEC. UPGRADES
PACKAGE A - S2 RE-FEED

ELECTRICAL
PB-CLC-001
LOAD CENTER
ONE LINE DIAGRAM

LICENSED PROFESSIONAL ENGINEER
BRIAN G. YOUNG
NO.8841511
02/26/2025
STATE OF UTAH

DATE FEBRUARY 2025
PROJECT NUMBER 19-002
DRAWING NUMBER E-GN-018
SHEET OF

SCOPE OF WORK KEY NOTES:

A PACKAGE A - S2 RE-FEED

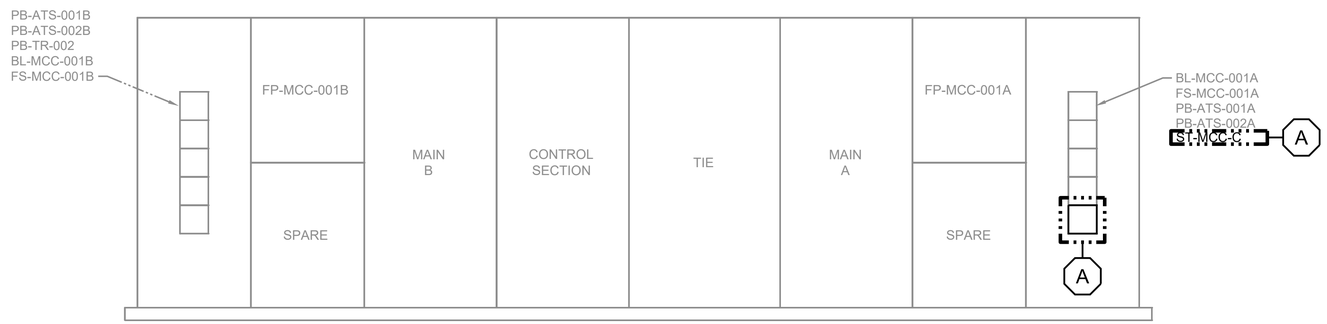

1 PB-CLC-001 LOAD CENTER ELEVATION

- SCALE: NONE

NO.	DATE	REVISION	BY	APVD

VERIFY SCALE

BAR IS ONE INCH ON ORIGINAL DRAWING.

0 1"

IF NOT ONE INCH ON THIS SHEET, ADJUST SCALES ACCORDINGLY.

DESIGN TCA
DRAWN TCA
CHECKED BGY
APPROVED JHM

WATERWORKS ENGINEERS

provo WELCOME HOME

PROVO CITY
PUBLIC WORKS DEPT
PROVO WRF
PHASE 1, ELEC. UPGRADES
PACKAGE A - S2 RE-FEED

ELECTRICAL
PB-CLC-001
LOAD CENTER
ELEVATION

LICENSED PROFESSIONAL ENGINEER
BRIAN G. YOUNG
NO.8841511
02/26/2025
STATE OF UTAH

DATE FEBRUARY 2025
PROJECT NUMBER 19-002
DRAWING NUMBER E-GN-019
SHEET OF

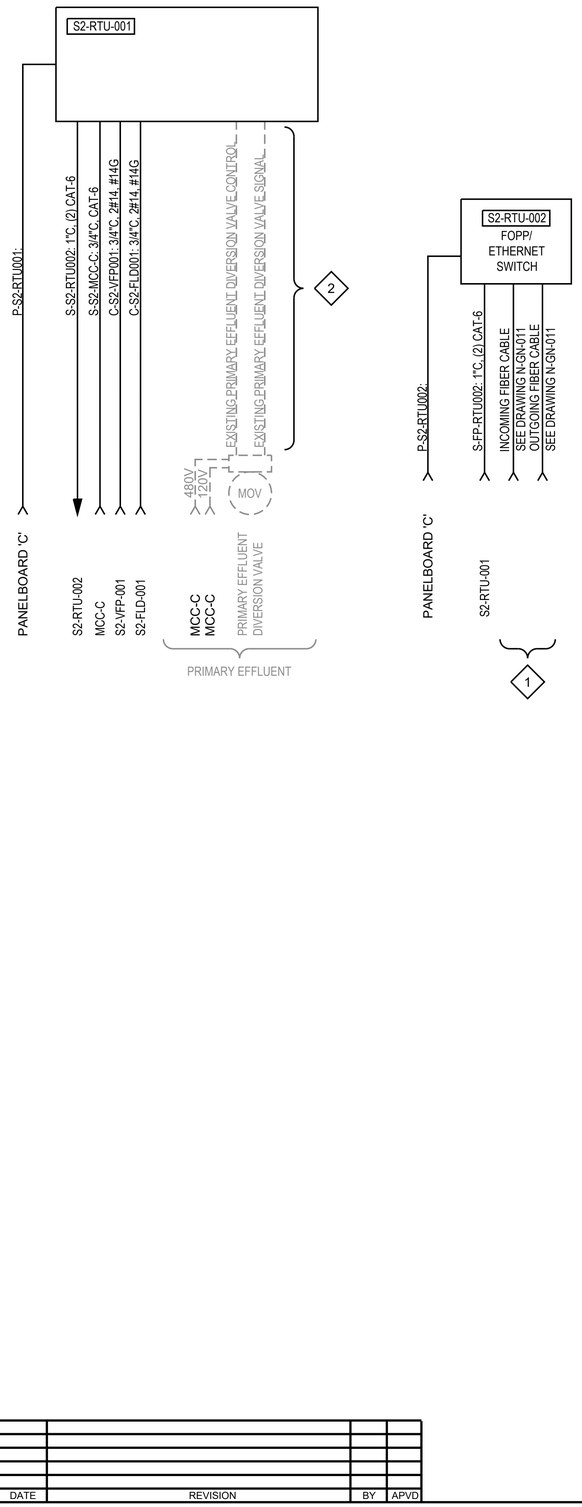

NOTES:

1. PROVIDE PULL-STRING FOR ALL SPARE CONDUITS.

KEY NOTES:

1. REFER TO NETWORK ARCHITECTURE DIAGRAM FOR CONTINUATION.
2. CONTRACTOR SHALL COORDINATE REQUIRED MONITORING AND CONTROL I/O POINTS OF THE EXISTING PRIMARY EFFLUENT DIVERSION VALVE BACK TO SCADA WITH OWNER. PROVIDE ALL NECESSARY CONDUIT AND WIRE PER NEC REQUIREMENTS.

1 BLOCK DIAGRAM - 1
- SCALE: NTS

NO.	DATE	REVISION	BY	APVD

VERIFY SCALE
BAR IS ONE INCH ON ORIGINAL DRAWING.
0 1"
IF NOT ONE INCH ON THIS SHEET, ADJUST SCALES ACCORDINGLY.

DESIGN TCA
DRAWN TCA
CHECKED BGY
APPROVED JHM

WATERWORKS ENGINEERS

provo WELCOME HOME

PROVO CITY
PUBLIC WORKS DEPT
PROVO WRF
PHASE 1, ELEC. UPGRADES
PACKAGE A - S2 RE-FEED

ELECTRICAL
BLOCK DIAGRAM 1

LICENSED PROFESSIONAL ENGINEER
BRIAN G. YOUNG
NO.8841511
02/26/2025
STATE OF UTAH

DATE FEBRUARY 2025
PROJECT NUMBER 19-002
DRAWING NUMBER E-GN-501
SHEET OF

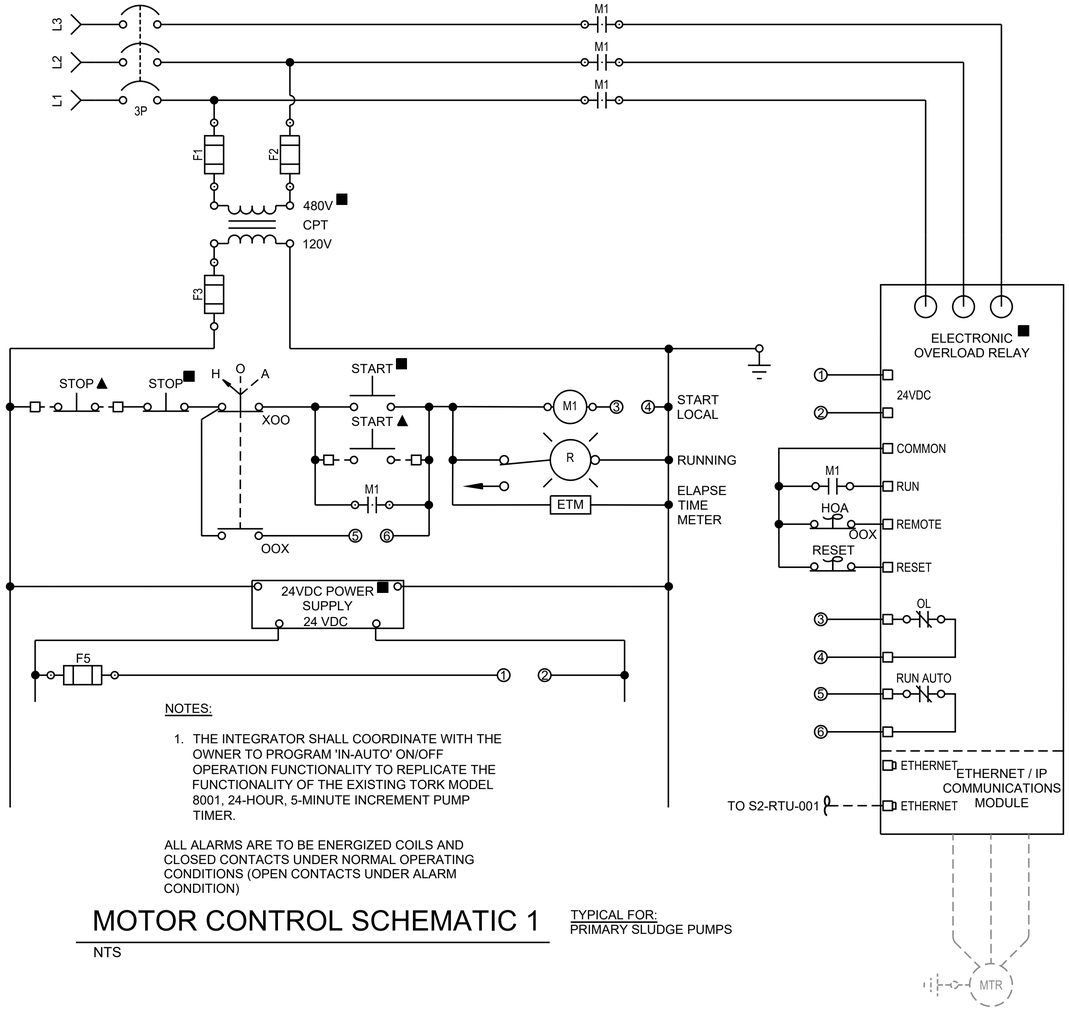

NOTES:

1. THE INTEGRATOR SHALL COORDINATE WITH THE OWNER TO PROGRAM 'IN-AUTO' ON/OFF OPERATION FUNCTIONALITY TO REPLICATE THE FUNCTIONALITY OF THE EXISTING TORK MODEL 8001, 24-HOUR, 5-MINUTE INCREMENT PUMP TIMER.

ALL ALARMS ARE TO BE ENERGIZED COILS AND CLOSED CONTACTS UNDER NORMAL OPERATING CONDITIONS (OPEN CONTACTS UNDER ALARM CONDITION)

MOTOR CONTROL SCHEMATIC 1

NTS

TYPICAL FOR:
PRIMARY SLUDGE PUMPS

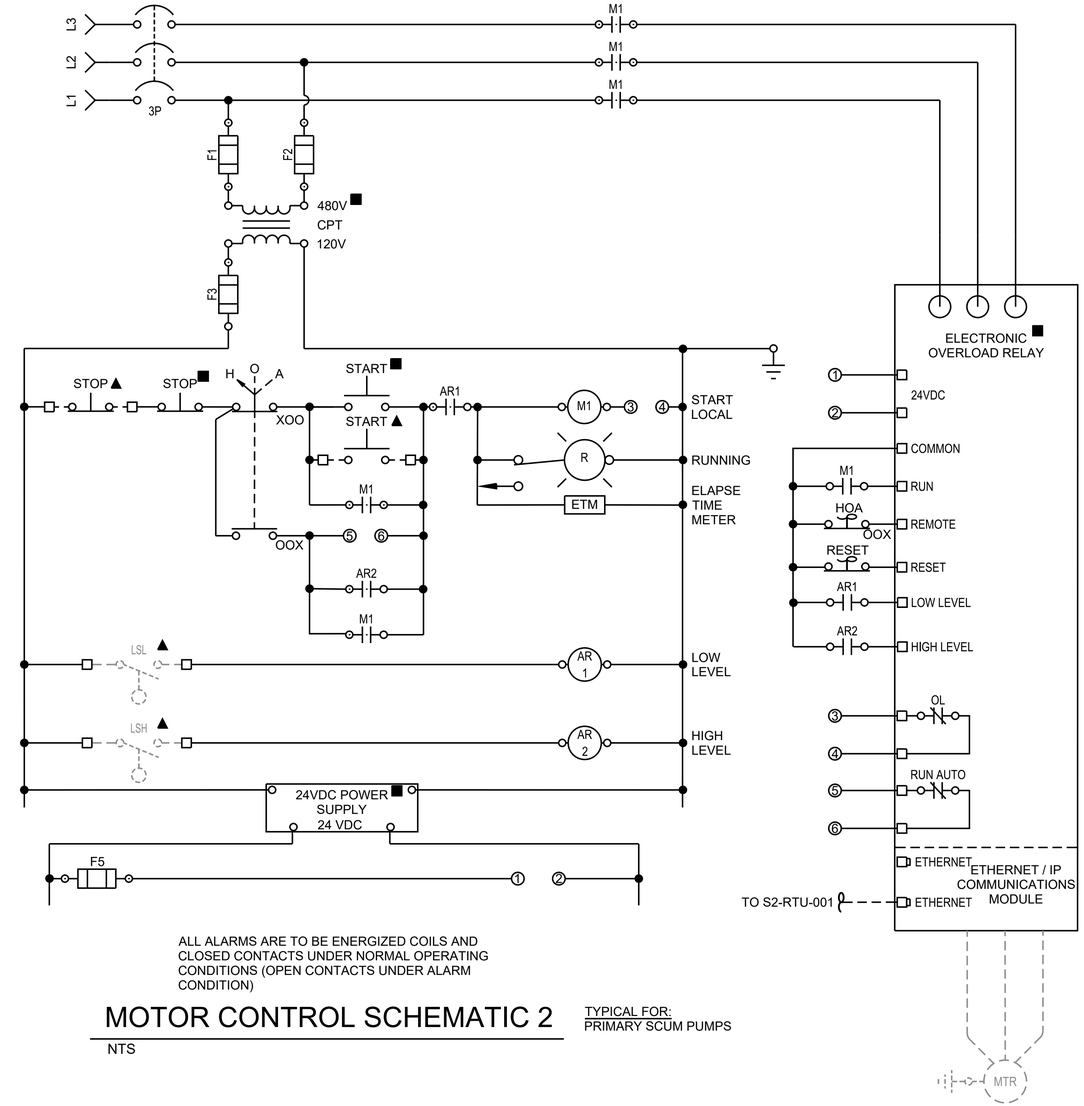

ALL ALARMS ARE TO BE ENERGIZED COILS AND CLOSED CONTACTS UNDER NORMAL OPERATING CONDITIONS (OPEN CONTACTS UNDER ALARM CONDITION)

MOTOR CONTROL SCHEMATIC 2

NTS

TYPICAL FOR:
PRIMARY SCUM PUMPS

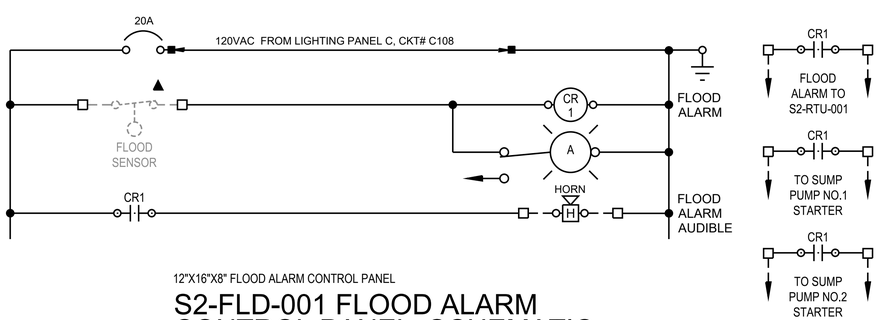

12"X16"X8" FLOOD ALARM CONTROL PANEL

S2-FLD-001 FLOOD ALARM CONTROL PANEL SCHEMATIC

NTS

NOTES:

1. THE CONTRACTOR SHALL BE ALLOWED TO COMBINE LIKE CIRCUITS WHERE APPROPRIATE WITH ENGINEERS APPROVAL.
2. REFER TO ONE LINE DIAGRAMS.

SYMBOLS

- ☐ ON VFD
- ■ LOCATED AT MCC BUCKET
- ◇ LOCAL TO PLC
- ○ DEVICE TERMINAL
- ▲ LOCATED AT LOCAL CONTROL STATION (LCS)

NO.	DATE	REVISION	BY	APVD

VERIFY SCALE
BAR IS ONE INCH ON ORIGINAL DRAWING.
0 1"
IF NOT ONE INCH ON THIS SHEET, ADJUST SCALES ACCORDINGLY.

DESIGN TCA
DRAWN TCA
CHECKED BGY
APPROVED JHM

WATERWORKS ENGINEERS

provo WELCOME HOME

PROVO CITY
PUBLIC WORKS DEPT
PROVO WRF
PHASE 1, ELEC. UPGRADES
PACKAGE A - S2 RE-FEED

ELECTRICAL
SCHEMATICS 1

BRIAN G. YOUNG
NO.8841511
02/26/2025
LICENSED PROFESSIONAL ENGINEER
STATE OF UTAH

DATE FEBRUARY 2025
PROJECT NUMBER 19-002
DRAWING NUMBER E-GN-521
SHEET OF

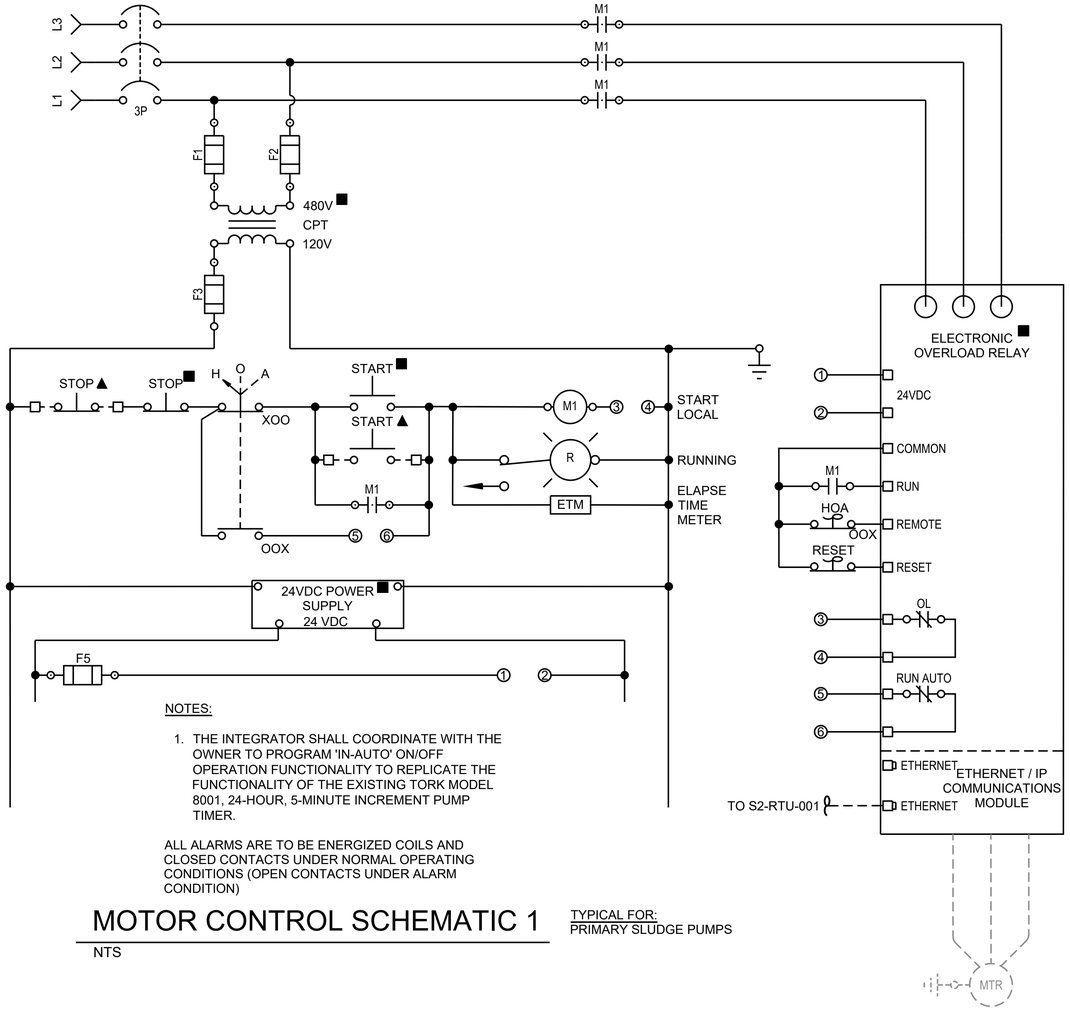

NOTES:

1. THE INTEGRATOR SHALL COORDINATE WITH THE OWNER TO PROGRAM 'IN-AUTO' ON/OFF OPERATION FUNCTIONALITY TO REPLICATE THE FUNCTIONALITY OF THE EXISTING TORK MODEL 8001, 24-HOUR, 5-MINUTE INCREMENT PUMP TIMER.

ALL ALARMS ARE TO BE ENERGIZED COILS AND CLOSED CONTACTS UNDER NORMAL OPERATING CONDITIONS (OPEN CONTACTS UNDER ALARM CONDITION)

MOTOR CONTROL SCHEMATIC 1

NTS

TYPICAL FOR:
PRIMARY SLUDGE PUMPS

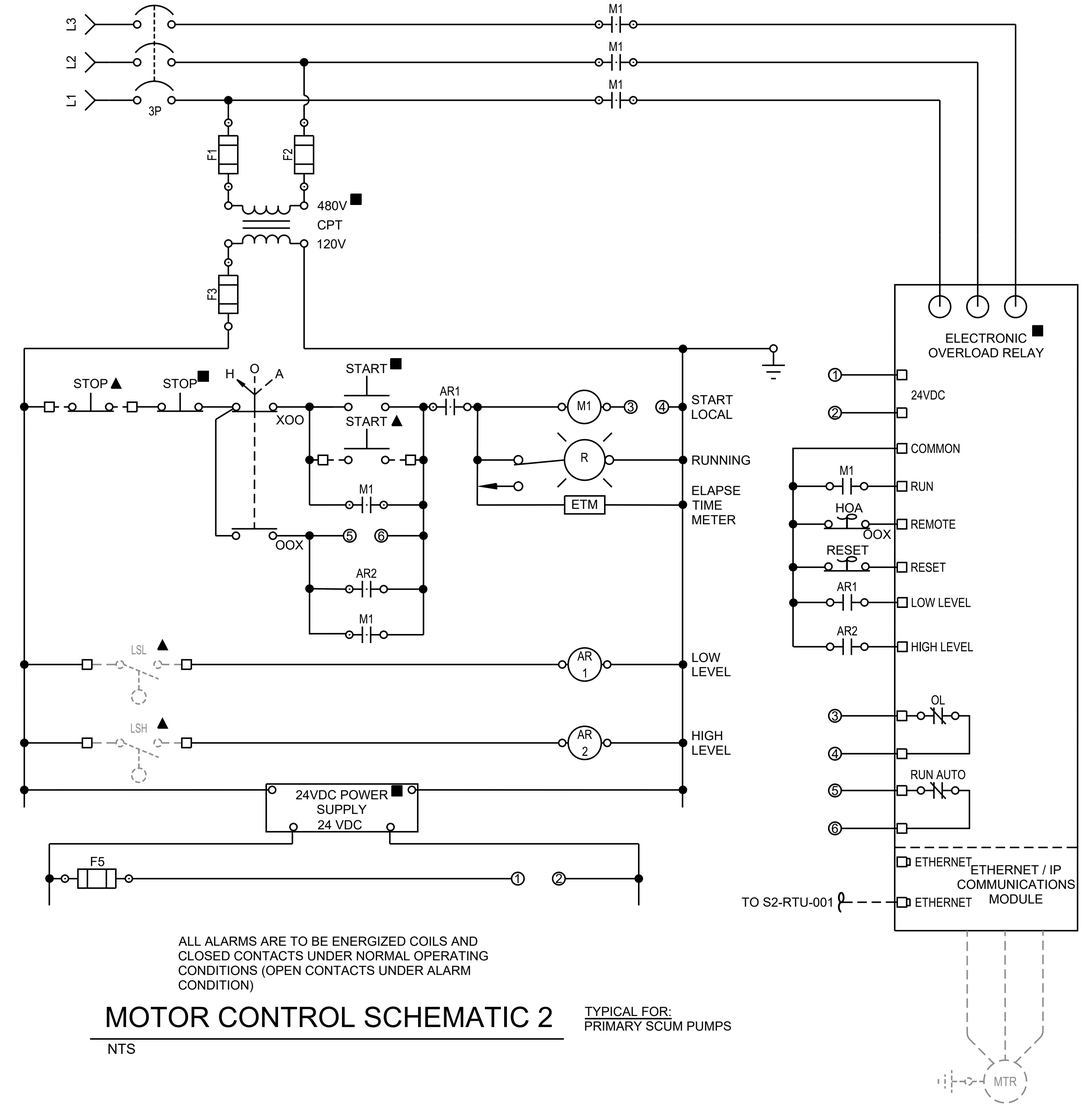

ALL ALARMS ARE TO BE ENERGIZED COILS AND CLOSED CONTACTS UNDER NORMAL OPERATING CONDITIONS (OPEN CONTACTS UNDER ALARM CONDITION)

MOTOR CONTROL SCHEMATIC 2

NTS

TYPICAL FOR:
PRIMARY SCUM PUMPS

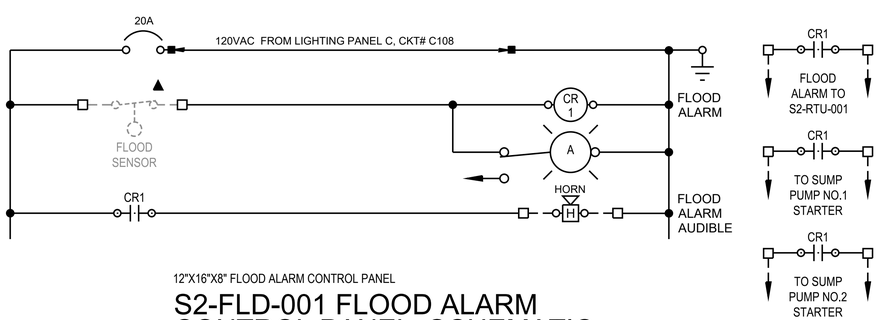

12"X16"X8" FLOOD ALARM CONTROL PANEL

S2-FLD-001 FLOOD ALARM CONTROL PANEL SCHEMATIC

NTS

NOTES:

1. THE CONTRACTOR SHALL BE ALLOWED TO COMBINE LIKE CIRCUITS WHERE APPROPRIATE WITH ENGINEERS APPROVAL.
2. REFER TO ONE LINE DIAGRAMS.

SYMBOLS

- ☐ ON VFD
- ■ LOCATED AT MCC BUCKET
- ◇ LOCAL TO PLC
- ○ DEVICE TERMINAL
- ▲ LOCATED AT LOCAL CONTROL STATION (LCS)

NO.	DATE	REVISION	BY	APVD

VERIFY SCALE
BAR IS ONE INCH ON ORIGINAL DRAWING.
0 1"
IF NOT ONE INCH ON THIS SHEET, ADJUST SCALES ACCORDINGLY.

DESIGN TCA
DRAWN TCA
CHECKED BGY
APPROVED JHM

WATERWORKS ENGINEERS

provo WELCOME HOME

PROVO CITY
PUBLIC WORKS DEPT
PROVO WRF
PHASE 1, ELEC. UPGRADES
PACKAGE A - S2 RE-FEED

ELECTRICAL
SCHEMATICS 1

BRIAN G. YOUNG
NO.8841511
02/26/2025
LICENSED PROFESSIONAL ENGINEER
STATE OF UTAH

DATE FEBRUARY 2025
PROJECT NUMBER 19-002
DRAWING NUMBER E-GN-521
SHEET OF

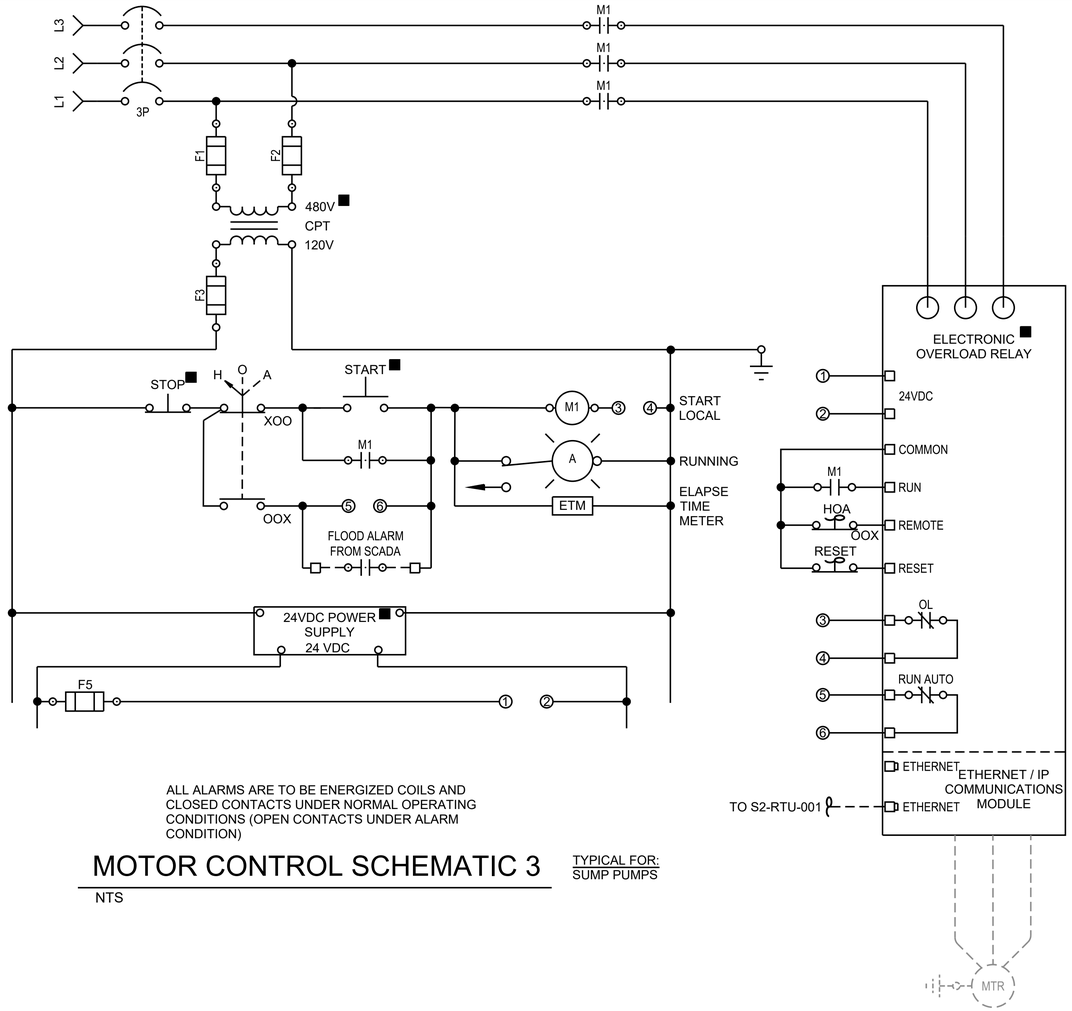

ALL ALARMS ARE TO BE ENERGIZED COILS AND CLOSED CONTACTS UNDER NORMAL OPERATING CONDITIONS (OPEN CONTACTS UNDER ALARM CONDITION)

MOTOR CONTROL SCHEMATIC 3

NTS

TYPICAL FOR:
SUMP PUMPS

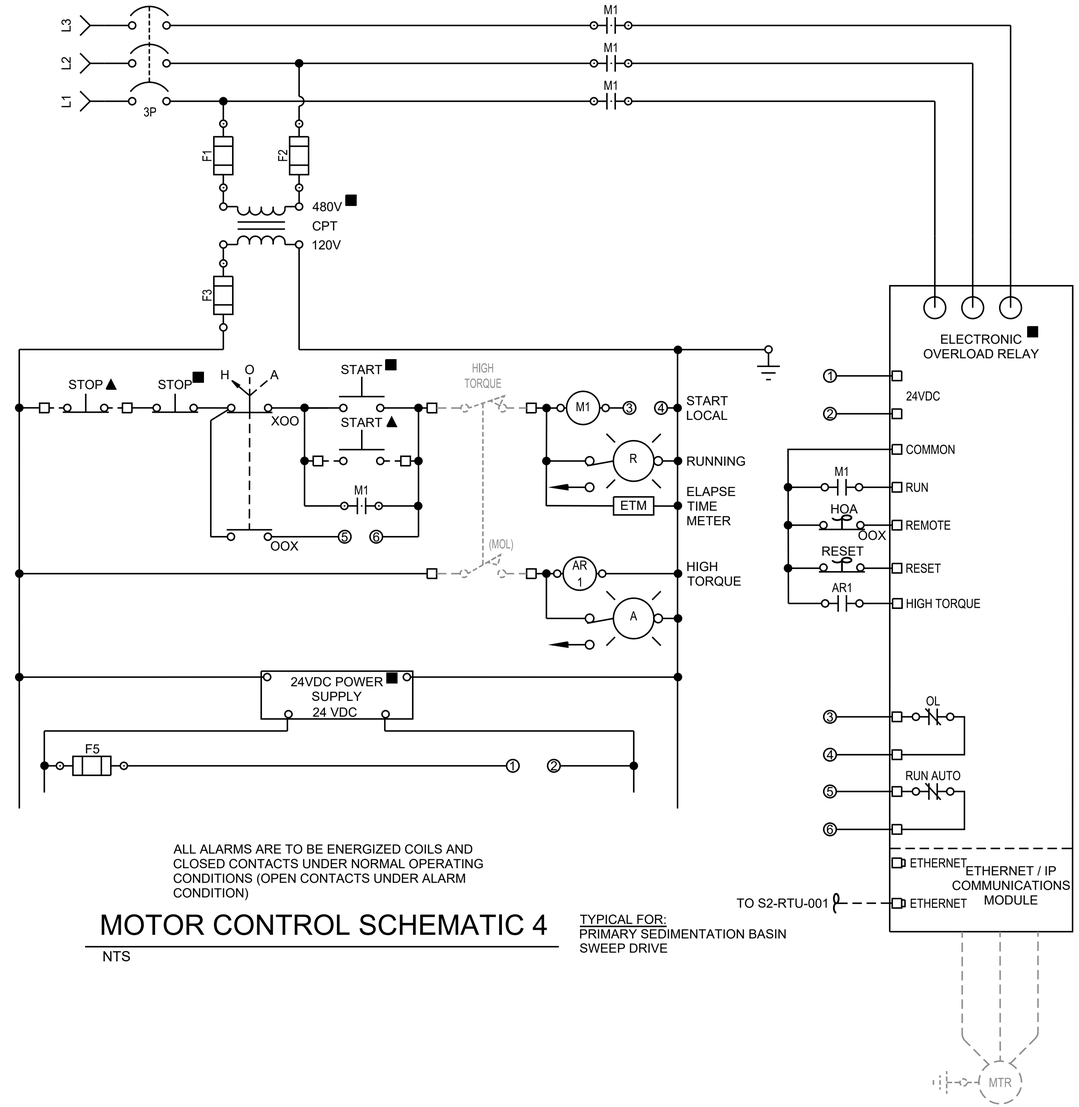

ALL ALARMS ARE TO BE ENERGIZED COILS AND CLOSED CONTACTS UNDER NORMAL OPERATING CONDITIONS (OPEN CONTACTS UNDER ALARM CONDITION)

MOTOR CONTROL SCHEMATIC 4

NTS

TYPICAL FOR:
PRIMARY SEDIMENTATION BASIN
SWEEP DRIVE

NOTES:

1. THE CONTRACTOR SHALL BE ALLOWED TO COMBINE LIKE CIRCUITS WHERE APPROPRIATE WITH ENGINEERS APPROVAL.
2. REFER TO ONE LINE DIAGRAMS.

SYMBOLS

- ☐ ON VFD
- ■ LOCATED AT MCC BUCKET
- ◇ LOCAL TO PLC
- ○ DEVICE TERMINAL
- ▲ LOCATED AT LOCAL CONTROL STATION (LCS)

NO.	DATE	REVISION	BY	APVD

VERIFY SCALE
BAR IS ONE INCH ON ORIGINAL DRAWING.
0 1"
IF NOT ONE INCH ON THIS SHEET, ADJUST SCALES ACCORDINGLY.

DESIGN TCA
DRAWN TCA
CHECKED BGY
APPROVED JHM

WATERWORKS ENGINEERS

provo WELCOME HOME

PROVO CITY
PUBLIC WORKS DEPT
PROVO WRF
PHASE 1, ELEC. UPGRADES
PACKAGE A - S2 RE-FEED

ELECTRICAL
SCHEMATICS 2

LICENSED PROFESSIONAL ENGINEER
BRIAN G. YOUNG
NO.8841511
02/26/2025
STATE OF UTAH

DATE FEBRUARY 2025
PROJECT NUMBER 19-002
DRAWING NUMBER E-GN-522
SHEET OF

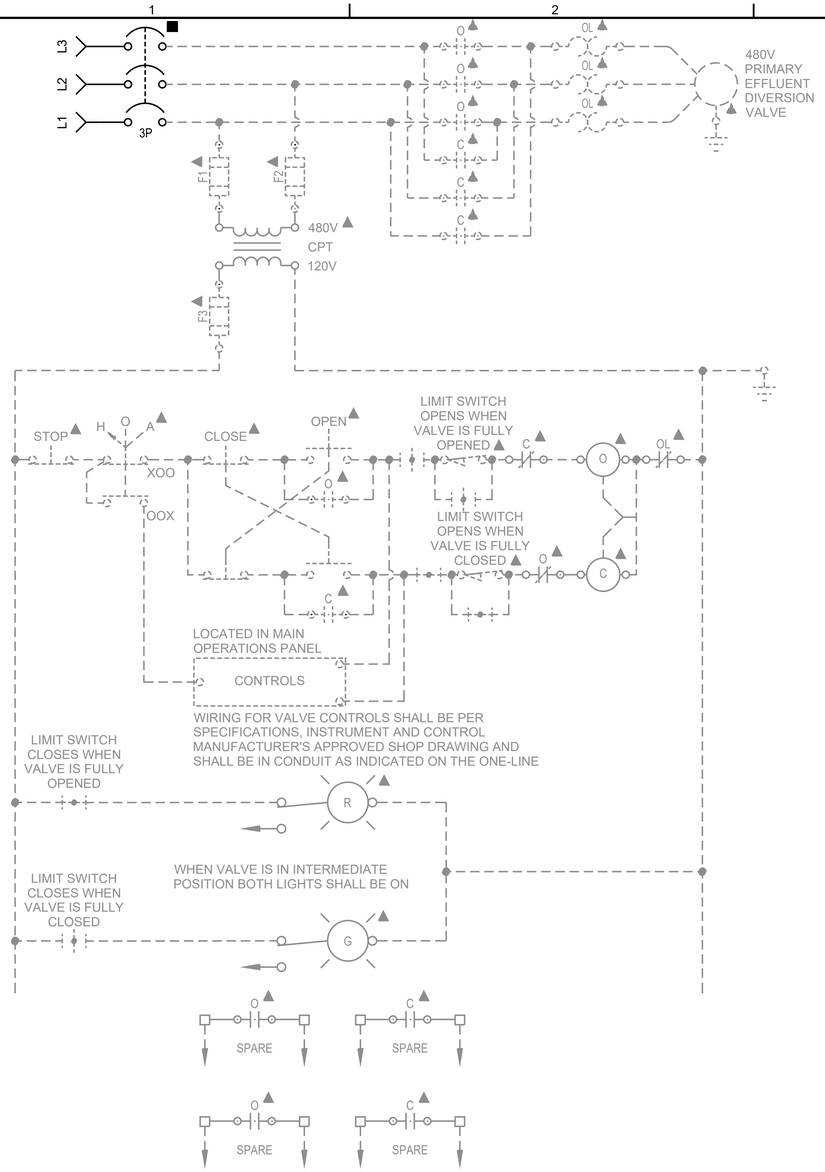

ALL ALARMS ARE TO BE ENERGIZED COILS AND CLOSED CONTACTS UNDER NORMAL OPERATING CONDITIONS (OPEN CONTACTS UNDER ALARM CONDITION)

MOTOR CONTROL SCHEMATIC 5

NTS

TYPICAL FOR:
PRIMARY EFFLUENT DIVERSION VALVE

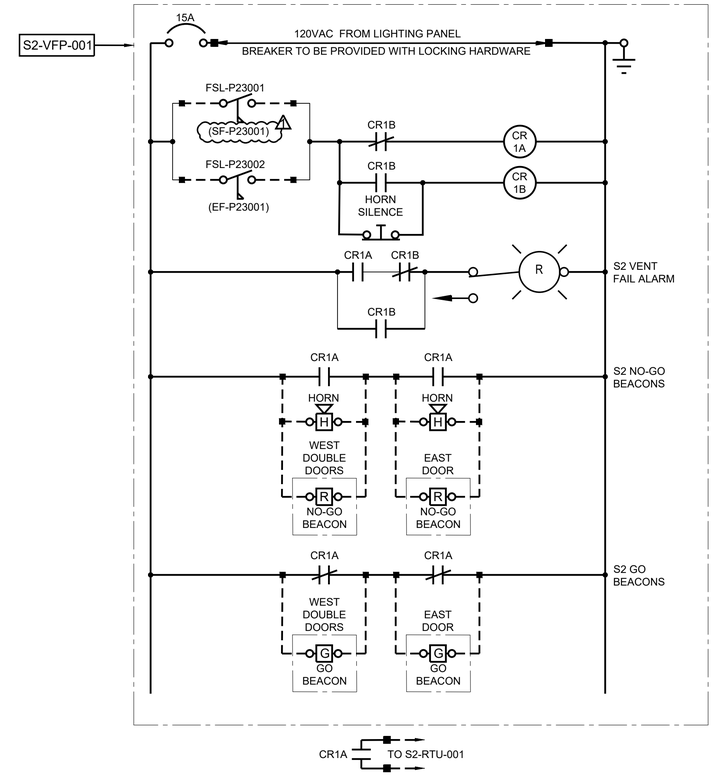

VENTILATION FAIL PANEL S2-VFP-001 SCHEMATIC DIAGRAM

NTS

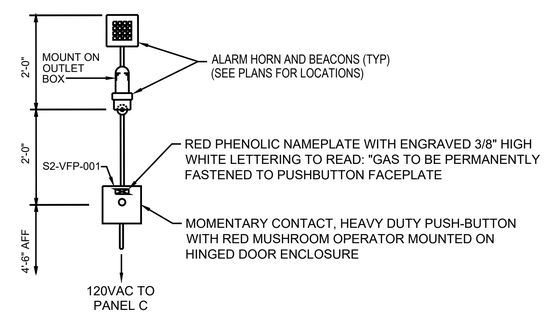

NOTE: ALL EXPOSED SURFACES OF COMPONENTS SHALL HAVE A YELLOW ENAMEL FINISH, INCLUDING CONDUIT (WITHIN A 10'-0" RADIUS OF THE STATION), BOXES, ENCLOSURES & HORN GRILLE.

VENTILATION FAIL PANEL ASSEMBLY DETAIL

NTS

NOTES:

1. THE CONTRACTOR SHALL BE ALLOWED TO COMBINE LIKE CIRCUITS WHERE APPROPRIATE WITH ENGINEERS APPROVAL.
2. REFER TO ONE LINE DIAGRAMS.

SYMBOLS

- ☐ ON VFD
- ■ LOCATED AT MCC BUCKET
- ◇ LOCAL TO PLC
- ○ DEVICE TERMINAL
- ▲ LOCATED AT LOCAL CONTROL STATION (LCS)

NO.	DATE	REVISION	BY	APVD
1	2/25/25	CHANGES AFTER 90% DESIGN	TCA	BGY

VERIFY SCALE
BAR IS ONE INCH ON ORIGINAL DRAWING.
0 1"
IF NOT ONE INCH ON THIS SHEET, ADJUST SCALES ACCORDINGLY.

DESIGN TCA
DRAWN TCA
CHECKED BGY
APPROVED JHM

WATERWORKS ENGINEERS

provo WELCOME HOME

PROVO CITY
PUBLIC WORKS DEPT
PROVO WRF
PHASE 1, ELEC. UPGRADES
PACKAGE A - S2 RE-FEED

ELECTRICAL
SCHEMATICS 3

LICENSED PROFESSIONAL ENGINEER
BRIAN G. YOUNG
NO. 8841511
02/26/2025
STATE OF UTAH

DATE FEBRUARY 2025
PROJECT NUMBER 19-002
DRAWING NUMBER E-GN-523
SHEET OF

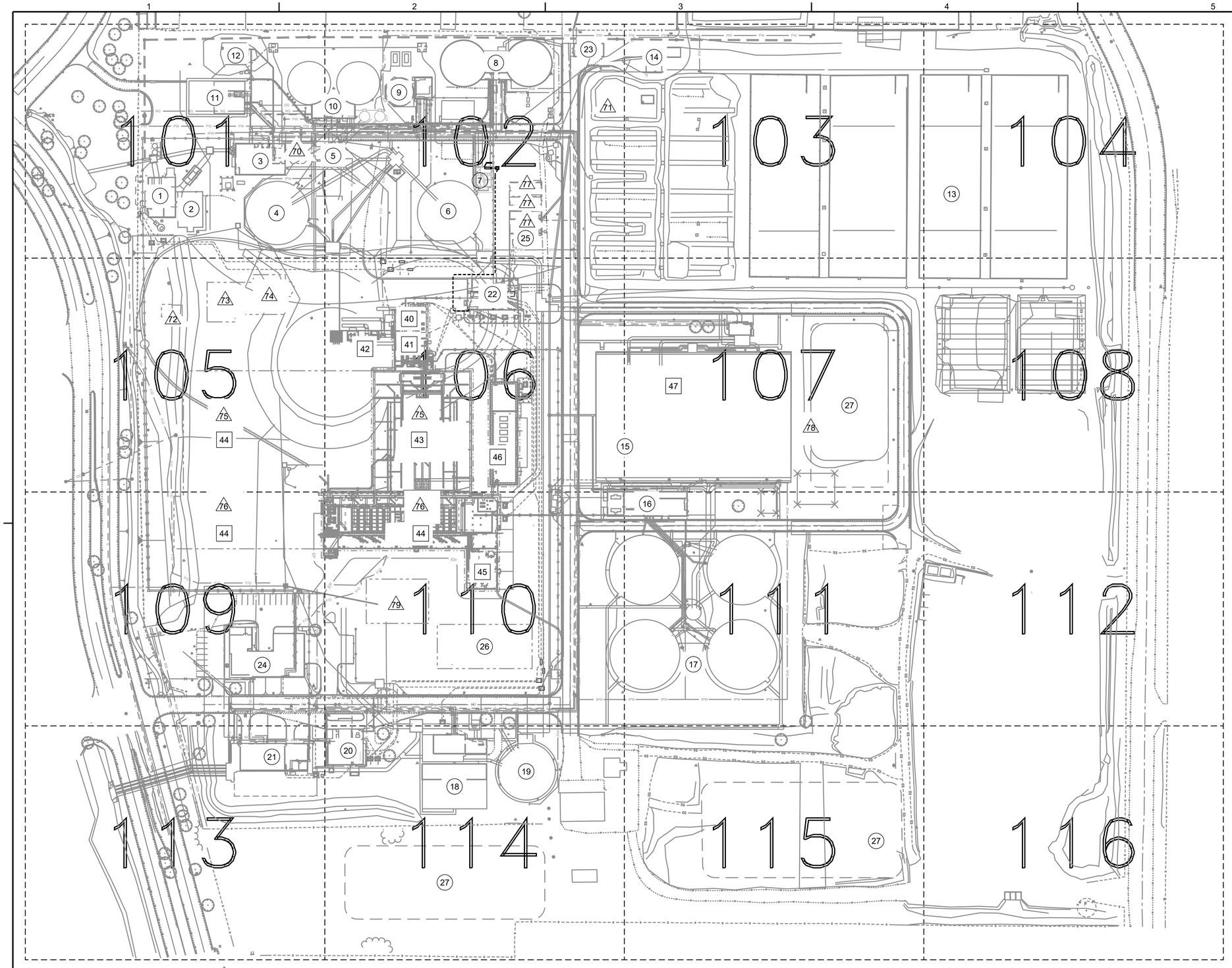

#	EXISTING STRUCTURES
1.	COARSE SCREENS
2.	GRIT BASINS
3.	INFLUENT PUMP STATION
4.	PRIMARY CLARIFIER NO. 1
5.	PRIMARY P.S NO. 1
6.	PRIMARY CLARIFIER NO. 2
7.	PRIMARY P.S NO. 2
8.	PRIMARY DIGESTERS
9.	DAF
10.	SECONDARY DIGESTERS
11.	DEWATERING BUILDING
12.	CENTRATE EQUALIZATION BASIN
13.	DRYING BEDS
14.	FERRIC DOSING FACILITY
15.	AERATION BASINS
16.	BLOWER BUILDING
17.	FINAL CLARIFIERS
18.	FILTER BUILDING
19.	BACKWASH TANK
20.	CHLORINE BUILDING
21.	UV BUILDING
22.	POWER DISTRIBUTION BUILDING
23.	PLANT POWER BUILDING
24.	OPERATIONS BUILDING
25.	STANDBY GENERATORS
26.	CONTRACTOR AND ENGINEERING OFFICE TRAILER
27.	STAGING AREA

#	PACKAGE 2 STRUCTURES
40.	FINE SCREEN PUMP STATION
41.	FINE SCREEN BUILDING
42.	ODOR CONTROL
43.	BIOREACTORS
44.	MEMBRANE BUILDING
45.	CHEMICAL STORAGE
46.	BLOWER BUILDING
47.	EQUALIZATION AND SURGE

#	FUTURE STRUCTURES
70.	NORTH LOAD CENTER
71.	WASTE GAS BURNER
72.	PLANT LIFT STATION
73.	COARSE SCREENS
74.	GRIT BASINS
75.	BIOREACTORS
76.	MEMBRANE BUILDING
77.	STANDBY GENERATORS
78.	SURGE BASINS
79.	OPERATIONS BUILDING
XX.	SURGE BASINS

VERIFY SCALE
BAR IS ONE INCH ON ORIGINAL DRAWING.
0 1"
IF NOT ONE INCH ON THIS SHEET, ADJUST SCALES ACCORDINGLY.

DESIGN TCA
DRAWN TCA
CHECKED BGY
APPROVED JHM

WATERWORKS ENGINEERS

provo WELCOME HOME

PROVO CITY
PUBLIC WORKS DEPT
PROVO WRF
PHASE 1, ELEC. UPGRADES
PACKAGE A - S2 RE-FEED

ELECTRICAL

SITE ELECTRICAL KEY PLAN

LICENSED PROFESSIONAL ENGINEER
BRIAN G. YOUNG
NO.8841511
02/26/2025
STATE OF UTAH

DATE FEBRUARY 2025
PROJECT NUMBER 19-002
DRAWING NUMBER E-SE-100
SHEET OF

NO.	DATE	REVISION	BY	APVD

FILENAME: W:\CAD\PROJECTS\19-002 PROVO WATRR PHASE 1_{S}\PROJECT FILES_PHASE 1 ELECTRICAL UPGRADES\07 DRAWINGS\PACKAGE A - S2 RE-FEED\PA-1902D-SE-E100.DWG

PLOT DATE: February 26, 2025 PLOT TIME: 12:32 PM

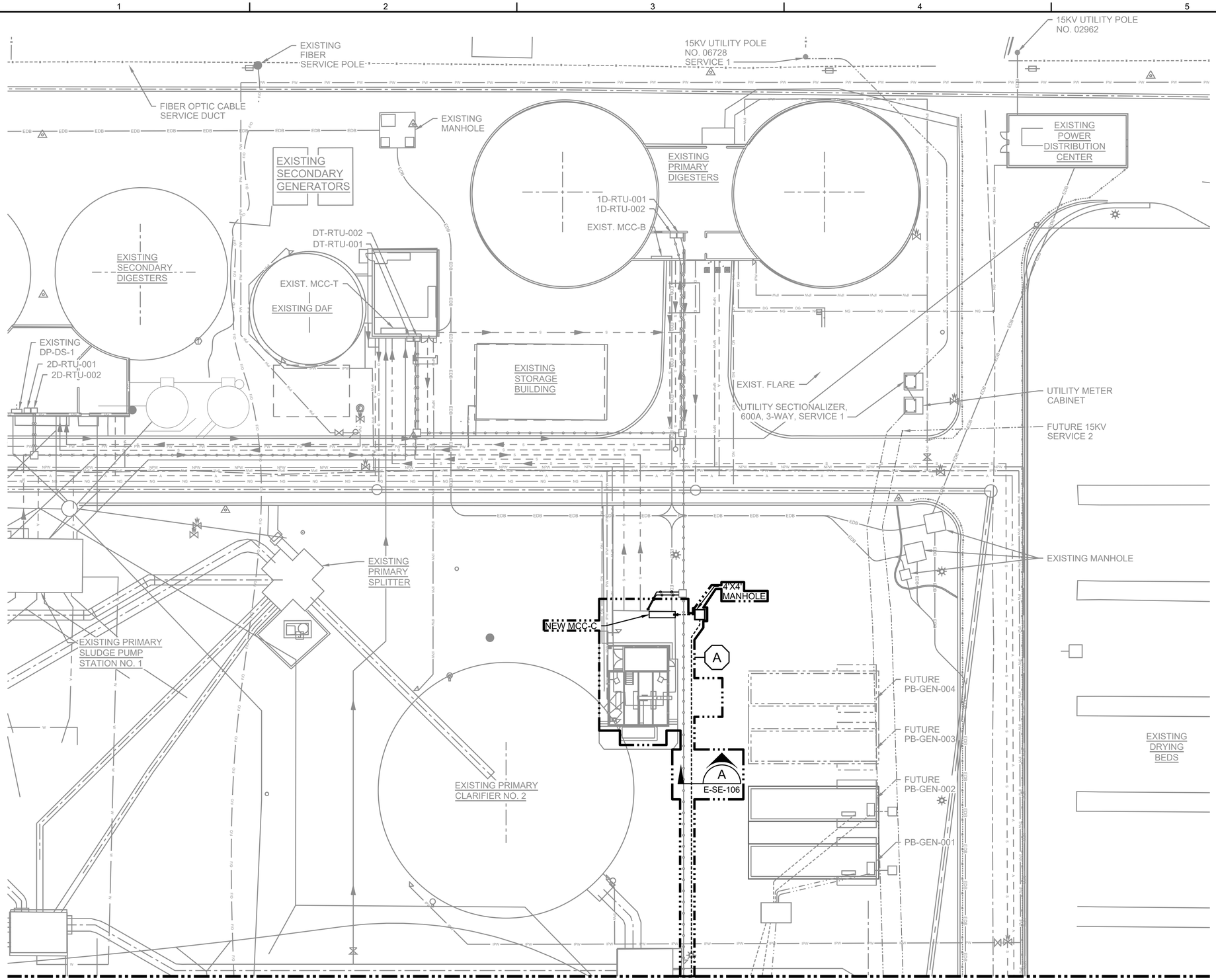

SCOPE OF WORK KEY NOTES:

(A) PACKAGE A - S2 RE-FEED

101	THIS SHEET	103	104
105	106	107	108
109	110	111	112
113	114	115	116

KEY MAP
1"=500'

NORTH

20 0 20 40 FEET
SCALE 1"=20'

LICENSED PROFESSIONAL ENGINEER
BRIAN G. YOUNG
NO.8841511
02/26/2025
STATE OF UTAH

NO.	DATE	REVISION	BY	APVD

VERIFY SCALE
BAR IS ONE INCH ON ORIGINAL DRAWING.
0 1"
IF NOT ONE INCH ON THIS SHEET, ADJUST SCALES ACCORDINGLY.

DESIGN TCA
DRAWN TCA
CHECKED BGY
APPROVED JHM

WATERWORKS ENGINEERS

provo WELCOME HOME

PROVO CITY
PUBLIC WORKS DEPT
PROVO WRF
PHASE 1, ELEC. UPGRADES
PACKAGE A - S2 RE-FEED

ELECTRICAL
SITE ELECTRICAL
AREA 102
PLAN

DATE FEBRUARY 2025
PROJECT NUMBER 19-002
DRAWING NUMBER E-SE-102
SHEET OF

FILENAME: W:\CAD\PROJECTS\19-002 PROVO WATRR PHASE 1_{S}\PROJECT FILES_PHASE 1 ELECTRICAL UPGRADES\07 DRAWINGS\PACKAGE A - S2 RE-FEED\PA-1902D-SE-E102.DWG PLOT DATE: February 26, 2025 PLOT TIME: 12:34 PM

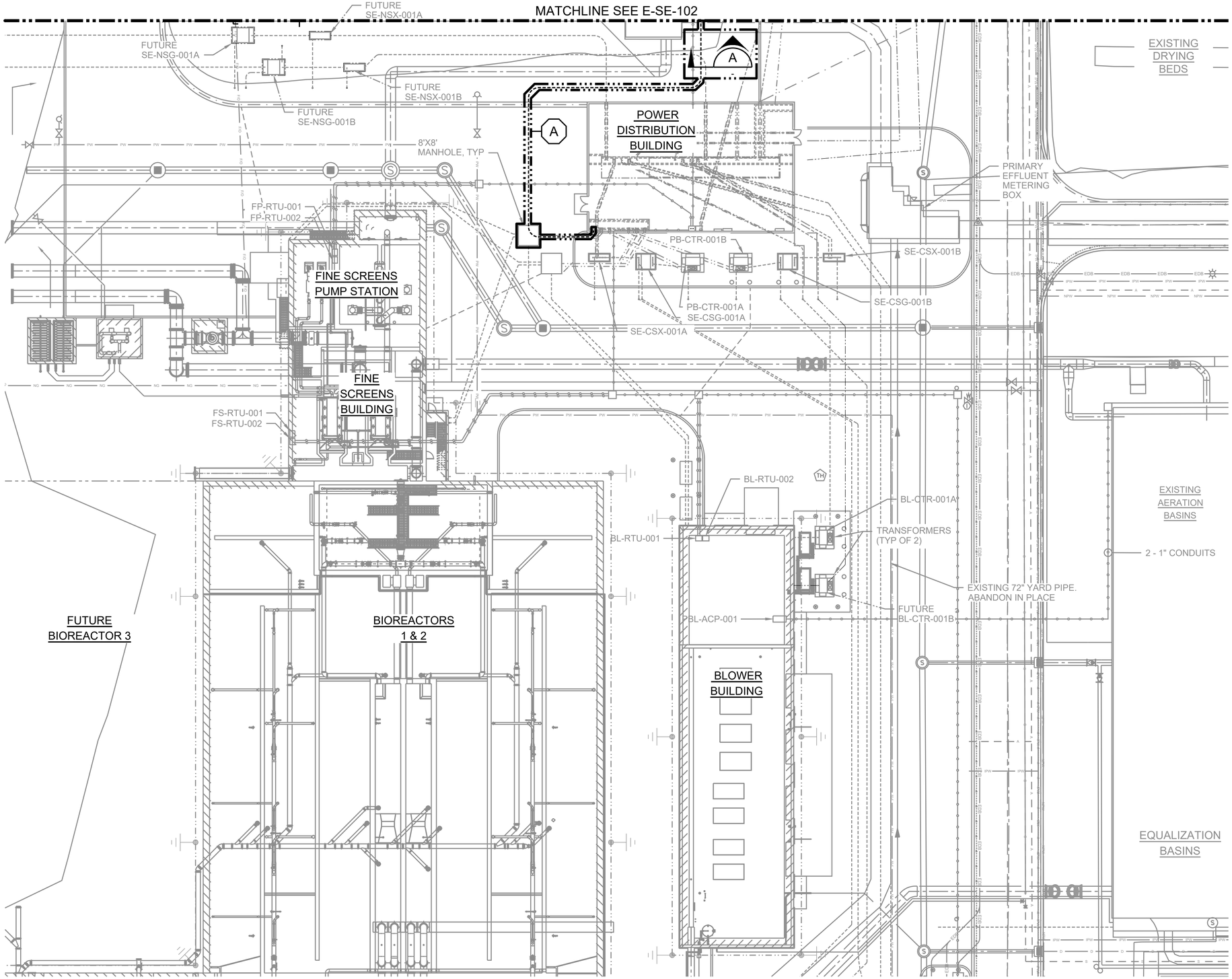

SCOPE OF WORK KEY NOTES:

A PACKAGE A - S2 RE-FEED

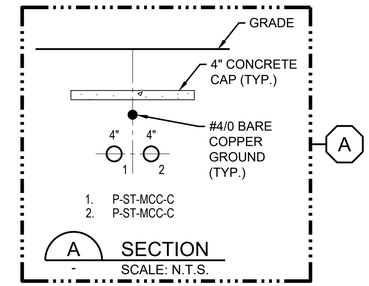

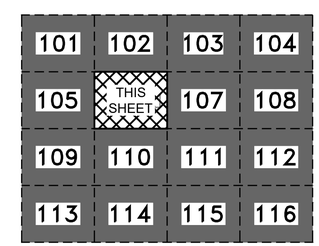

KEY MAP
1"=500'

NORTH

20 0 20 40 FEET
SCALE 1"=20'

LICENSED PROFESSIONAL ENGINEER
BRIAN G. YOUNG
NO.8841511
02/26/2025
STATE OF UTAH

NO.	DATE	REVISION	BY	APVD

VERIFY SCALE
BAR IS ONE INCH ON ORIGINAL DRAWING.
0 1"
IF NOT ONE INCH ON THIS SHEET, ADJUST SCALES ACCORDINGLY.

DESIGN TCA
DRAWN TCA
CHECKED BGY
APPROVED JHM

WATERWORKS ENGINEERS

provo WELCOME HOME

PROVO CITY
PUBLIC WORKS DEPT
PROVO WRF
PHASE 1, ELEC. UPGRADES
PACKAGE A - S2 RE-FEED

ELECTRICAL
SITE ELECTRICAL
AREA 106
PLAN

DATE FEBRUARY 2025
PROJECT NUMBER 19-002
DRAWING NUMBER E-SE-106
SHEET OF

FILENAME: W:\CAD\PROJECTS\19-002 PROVO WATRR PHASE 1_{S}\PROJECT FILES_PHASE 1 ELECTRICAL UPGRADES\07 DRAWINGS\PACKAGE A - S2 RE-FEED\PA-1902D-SE-E106.DWG PLOT DATE: February 26, 2025 PLOT TIME: 12:37 PM

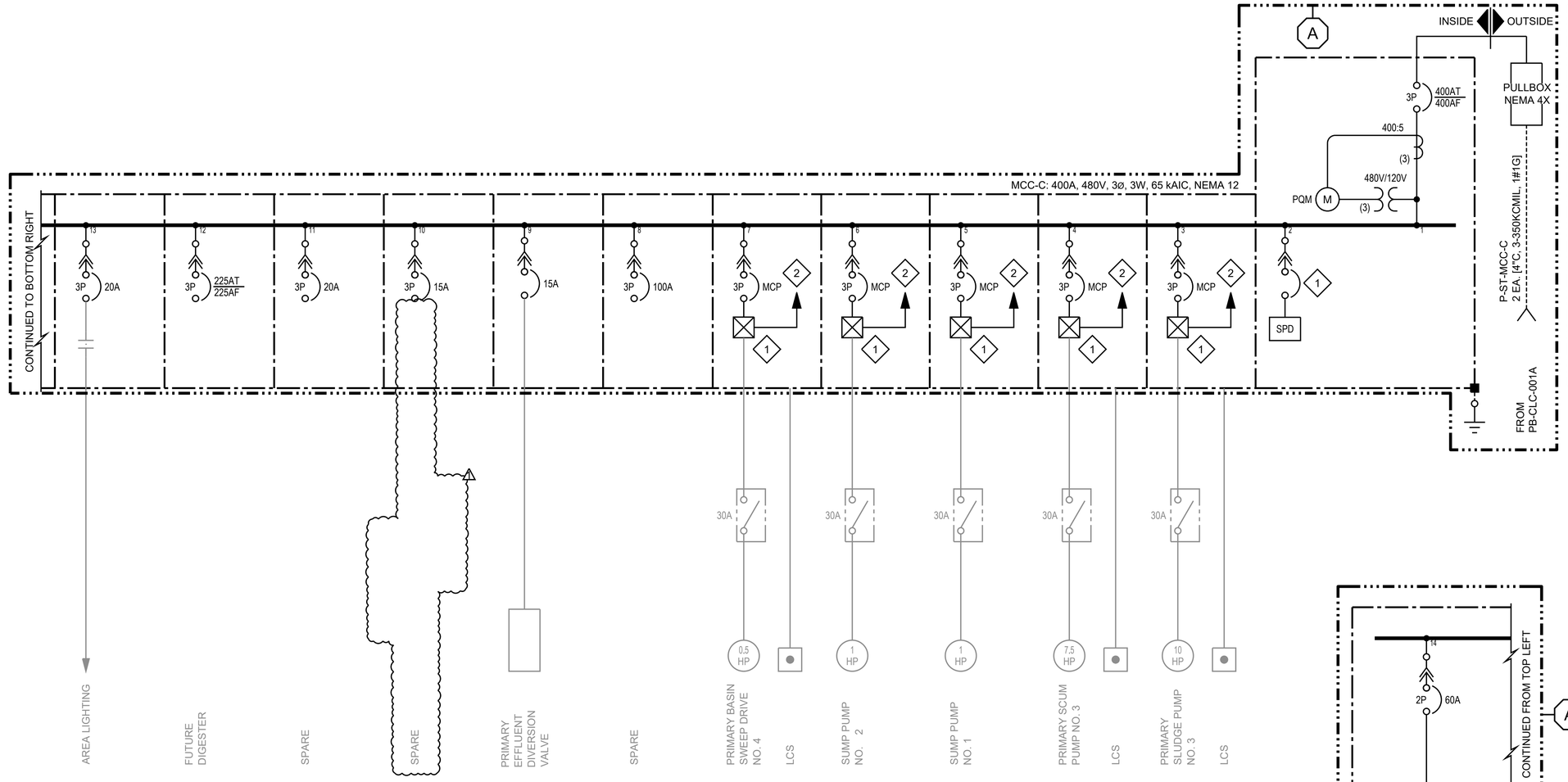

NOTES:

1. MCPS TO BE SIZED PER MANUFACTURER RECOMMENDATION.
2. PROVIDE PULL STRING FOR ALL SPARE CONDUIT.

KEY NOTES:

1. SIZE PER MANUFACTURER RECOMMENDATION.
2. PROVIDE CAT-6 CABLE FROM EACH CONTROLLER TO ETHERNET SWITCHES LOCATED IN MCC. QUANTITY OF SWITCHES TO BE DETERMINED BY MCC MANUFACTURER. COMBINE ETHERNET SIGNAL SO THAT ONLY ONE ETHERNET CABLE IS REQUIRED FROM MCC-C BACK TO RTU.
3. CONTRACTOR SHALL SURVEY AND RECORD EXISTING PANELBOARD CIRCUIT DIRECTORY AND BREAKER RATINGS PRIOR TO DEMOLITION. RESTORE CIRCUITS AND BREAKER RATINGS TO MATCH EXISTING IN NEW PANEL C.

SCOPE OF WORK KEY NOTES:

A PACKAGE A - S2 RE-FEED

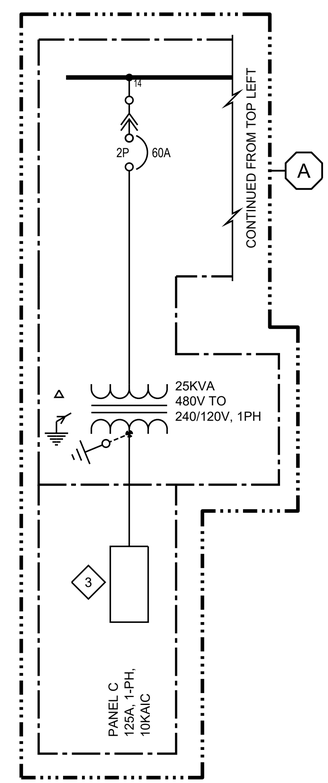

PANELBOARD C

225 AMP MAIN CIRCUIT BREAKER RATING — 10 KA SHORT CIRCUIT RATING — LOCATION: S2
225 AMP BUS RATING — 24 POLES — K FACTOR K4 — ENCLOSURE: NEMA 1
240/120 VOLTS — 1 PHASE — 3 WIRE — 60 HZ — MOUNTING: RECESSED

CIRCUIT NO.	DESCRIPTION	LOAD KVA PHASE A	LOAD KVA PHASE B	TYPE	BREAKER AMPS	NOTES	CIRCUIT NO.	DESCRIPTION	LOAD KVA PHASE A	LOAD KVA PHASE B	TYPE	BREAKER AMPS	NOTES
1	*FEED LIGHTING PANEL MAIN DIST. BLDG.*			CONT	60 /2		2	*POWER MH#2 BEHIND THICKENER*			CONT	20 /1	
3				CONT			4	**S2-RTU-002**		**0.25**	**CONT**	**20 /1**	**5**
5	**S2-VFP-001**	**0.20**		**CONT**	**20 /1**	**5**	6	*FLOW METER*			CONT	20 /1	
7	*FUTURE LIGHTS AND SIGHT GLASS*			CONT	20 /1		8	**S2-FLD-001**		**0.25**	**CONT**	**20 /1**	**5**
9	*MCC AREA LIGHTS*			CONT	20 /1		10	*PUMP AREA LIGHTS*			CONT	20 /1	
11	*OUTSIDE LIGHTS*			CONT	20 /1		12	*EMERGENCY LIGHTING*			CONT	20 /1	
13	*PUMP AREA OUTLETS*			CONT	20 /1		14	*CONTROL AREA OUTLETS*			CONT	20 /1	
15	*DENSITY METER, PLC*			CONT	20 /1		16	*EXTERIOR LIGHTS @ POWR DIST. BLDG.*			CONT	20 /1	
17	*PRIMARY SED. BASIN #4 OUTLETS*			CONT	20 /1		18	*MANHOLE #1 SUMP PUMP*			CONT	20 /1	
19	**S2-RTU-001**		**0.80**	**CONT**	**20 /1**	**5**	20	**SPARE**			CONT	20 /1	
21	**SF-P23001**	**0.84**		**CONT**	**15 /2**	**5,9**	22	**EF-P23001**	**0.60**		**CONT**	**15 /2**	**5,9**
23			**0.84**	**CONT**			24			**0.60**	**CONT**		
	SUM OF KVA (ODD):	1.040	1.640	TRANSFORMER KVA: 5 MIN				SUM OF KVA (EVEN):	0.600	1.100	25% LARGEST MOTOR:		0
	FEEDER KVA (ODD):	1.300	2.050					FEEDER KVA (EVEN):	0.750	1.375	TOTAL FEEDER KVA:		6
								FEEDER AMPS/PHASE	18	29	MAX AMPS:		29

NOTES:

1 PROVIDE LOCKING HARDWARE
3 EQUIPMENT PROTECTION 30ma GFI
5 BRANCH CIRCUIT WIRING: 3/4"C, 2#12,#12G
7 BRANCH CIRCUIT WIRING: 3/4"C, 3#12,#12G
9 HACR BREAKER
11

NOTES:

2 PROVIDE LOCKING RED HARDWARE
4 PERSONEL PROTECTION 5ma GFI
6 BRANCH CIRCUIT WIRING: 3/4"C, 2#10,#12G
8 BRANCH CIRCUIT WIRING: 3/4"C, 2#10,#10G
10
12

NO.	DATE	REVISION	BY	APVD
1	2/25/25	CHANGES AFTER 90% DESIGN	TCA	BGY

1 ST-MCC-C MOTOR CONTROL CENTER ONE LINE DIAGRAM

- SCALE: NTS

VERIFY SCALE
BAR IS ONE INCH ON ORIGINAL DRAWING.
0 1"
IF NOT ONE INCH ON THIS SHEET, ADJUST SCALES ACCORDINGLY.

DESIGN TCA
DRAWN TCA
CHECKED BGY
APPROVED JHM

WATERWORKS ENGINEERS

provo WELCOME HOME

PROVO CITY
PUBLIC WORKS DEPT
PROVO WRF
PHASE 1, ELEC. UPGRADES
PACKAGE A - S2 RE-FEED

ELECTRICAL
S2-MCC-C MOTOR CONTROL CENTER ONE LINE DIAGRAM

LICENSED PROFESSIONAL ENGINEER
BRIAN G. YOUNG
NO.8841511
02/26/2025
STATE OF UTAH

DATE FEBRUARY 2025
PROJECT NUMBER 19-002
DRAWING NUMBER E-S2-001
SHEET OF

FILENAME: W:\CAD\PROJECTS\19-002 PROVO WATRR PHASE 1_{S}\PROJECT FILES_PHASE 1 ELECTRICAL UPGRADES\07 DRAWINGS\PACKAGE A - S2 RE-FEED\R1_PA-1902D-S2-E001.DWG PLOT DATE: February 26, 2025 PLOT TIME: 12:43 PM

NOTES:

1. REFER TO ONE-LINES, PANEL SCHEDULES, BLOCK DIAGRAMS AND SCHEMATICS FOR CONDUIT AND WIRE AND ADDITIONAL REQUIREMENTS.

KEY NOTES:

1. BOND GEC TO EXISTING CAST IRON PIPE AND BUILDING STEEL IN ADDITION TO THE EQUIPMENT INDICATED ON THIS DRAWING.

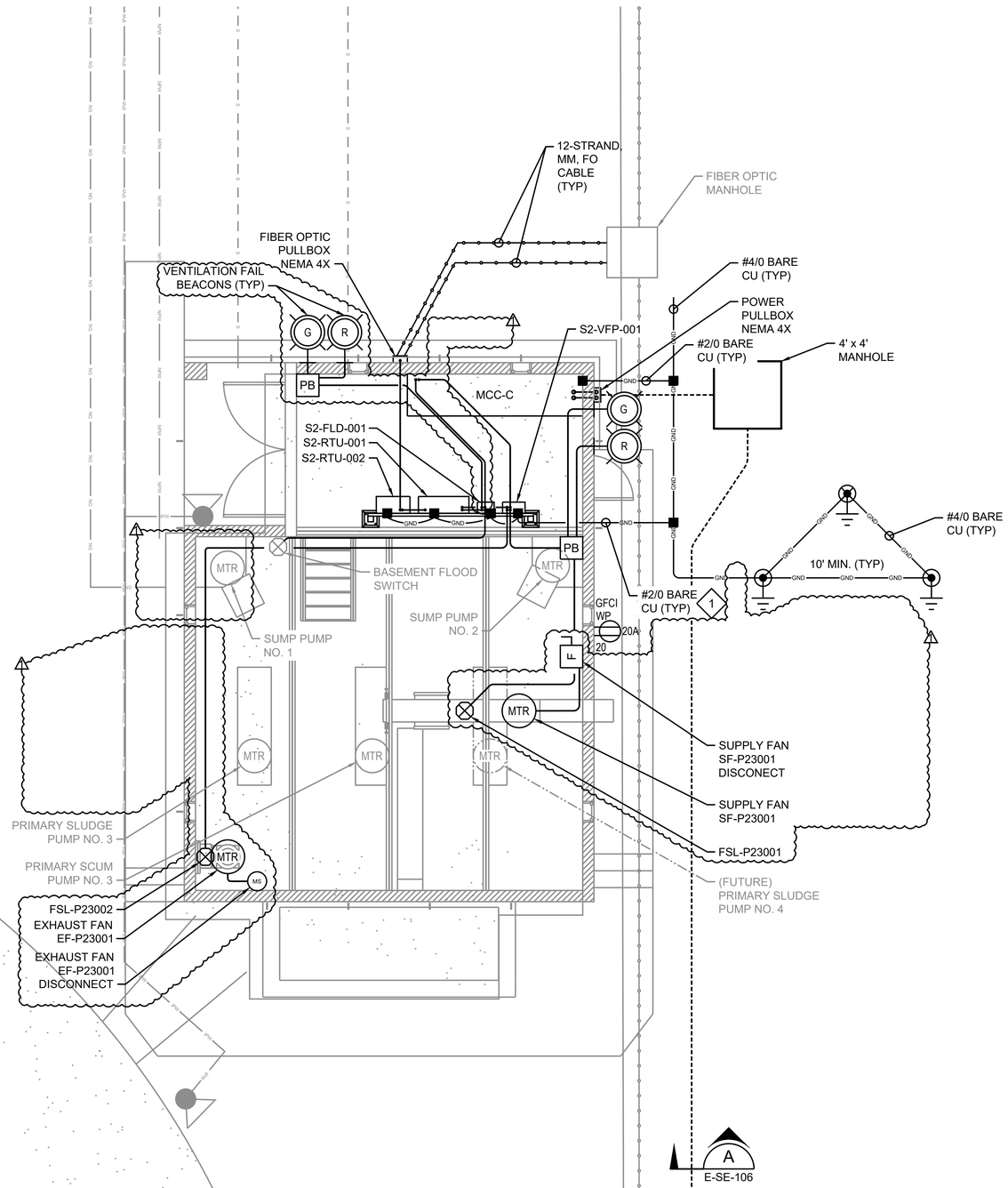

PRIMARY SLUDGE PUMP STATION NO. 2 POWER PLAN

SCALE: 1/4" = 1'-0"

REFER TO ELECTRICAL SITE PLAN E-SE-102 FOR CONTINUATION

NORTH

0 2 4 8

1/4" = 1'-0"

NO.	DATE	REVISION	BY	APVD
1	2/25/25	CHANGES AFTER 90% DESIGN	TCA	BGY

VERIFY SCALE

BAR IS ONE INCH ON ORIGINAL DRAWING. 0 1"

IF NOT ONE INCH ON THIS SHEET, ADJUST SCALES ACCORDINGLY.

DESIGN TCA
DRAWN TCA
CHECKED BGY
APPROVED JHM

WATERWORKS ENGINEERS

provo WELCOME HOME

PROVO CITY
PUBLIC WORKS DEPT
PROVO WRF
PHASE 1, ELEC. UPGRADES
PACKAGE A - S2 RE-FEED

ELECTRICAL
PRIMARY SLUDGE PUMP STATION NO. 2 POWER PLAN

LICENSED PROFESSIONAL ENGINEER
BRIAN G. YOUNG
NO.8841511
02/26/2025
STATE OF UTAH

DATE FEBRUARY 2025
PROJECT NUMBER 19-002
DRAWING NUMBER E-S2-101
SHEET OF

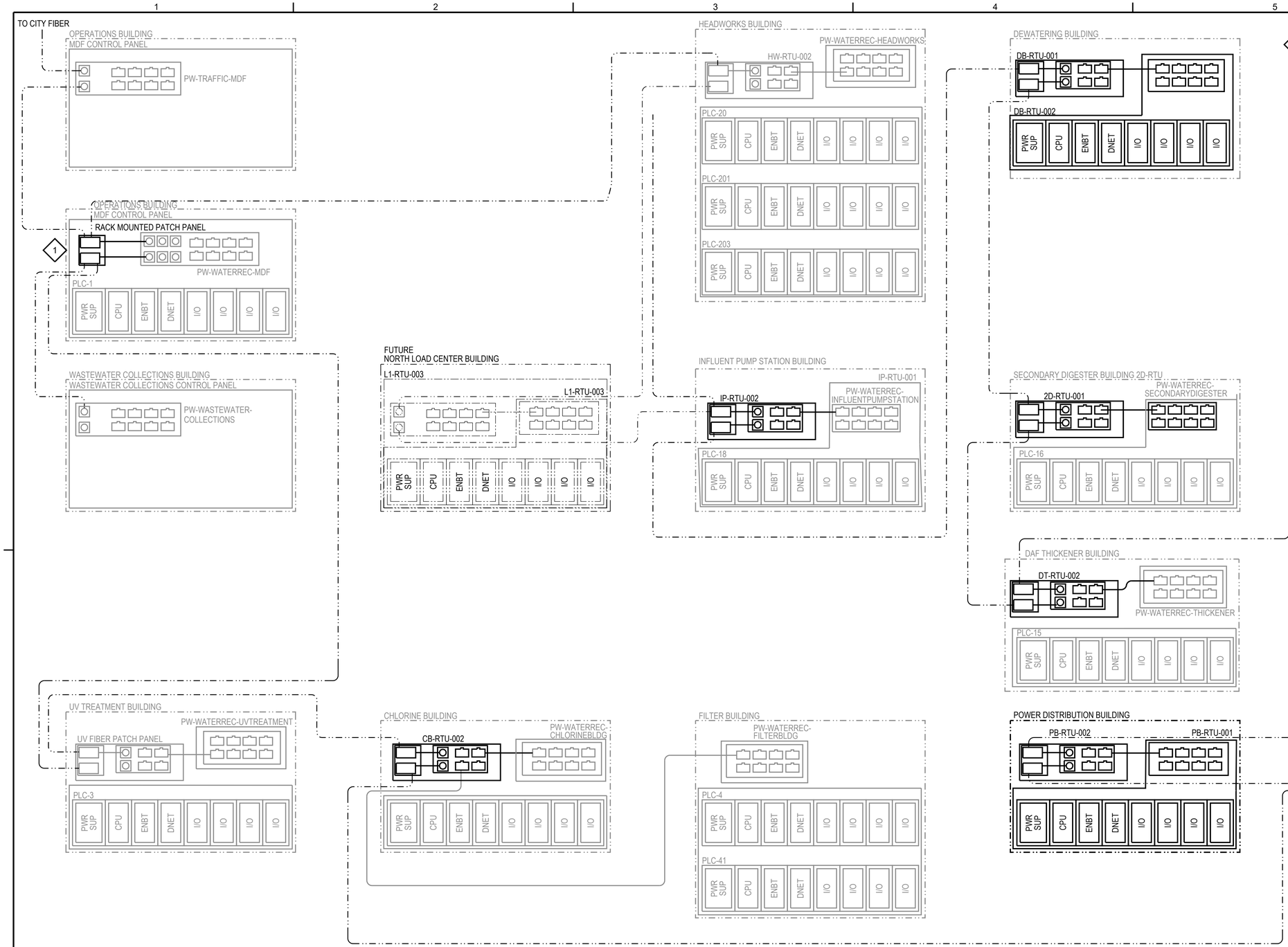

KEY NOTES:

1. INSTALL RACK MOUNTED FIBER PATCH PANEL IN EXISTING IT CABINET.

GENERAL NOTES:

1. PROVIDE A COMPLETE FIBER OPTIC LOOP SYSTEM FOR THE NEW POWER BUILDING (ALL OTHER WORK IS FUTURE).
2. FIBER OPTIC PATCH PANELS ARE TO BE INSTALLED IN THE NEW POWER BUILDING (ALL OTHER BUILDINGS ARE FUTURE). REFER TO STANDARD DETAILS BOOK FOR PANEL DETAILS.
3. NOT ALL EQUIPMENT IN EACH BUILDING IS SHOWN. REFER TO THE RTU NETWORK DRAWINGS FOR ADDITIONAL DETAILS.
4. VERIFY PANEL LABELS WITH OWNER PRIOR TO CONSTRUCTION.

VERIFY SCALE
BAR IS ONE INCH ON ORIGINAL DRAWING.
0 1"
IF NOT ONE INCH ON THIS SHEET, ADJUST SCALES ACCORDINGLY.

DESIGN JC / JLB
DRAWN KBK
CHECKED CLC / BGY
APPROVED JHM

WATERWORKS ENGINEERS

provo WELCOME HOME

PROVO CITY
PUBLIC WORKS DEPT
PROVO WRF
PHASE 1, ELEC. UPGRADES
PACKAGE A - S2 RE-FEED

INSTRUMENTATION

PROPOSED
NETWORK ARCHITECTURE

LICENSED PROFESSIONAL ENGINEER
BRIAN G. YOUNG
NO.8841511
02/26/2025
STATE OF UTAH

DATE FEBRUARY 2025
PROJECT NUMBER 19-002
DRAWING NUMBER N-GN-011
SHEET OF

NO.	DATE	REVISION	BY	APVD

FILENAME: W:\CAD\PROJECTS\19-002 PROVO WATRR PHASE 1_{S}\PROJECT FILES_PHASE 1 ELECTRICAL UPGRADES\07 DRAWINGS\PACKAGE A - S2 RE-FEED\PA-1902D-GN-N011.DWG PLOT DATE: February 26, 2025 PLOT TIME: 12:47 PM

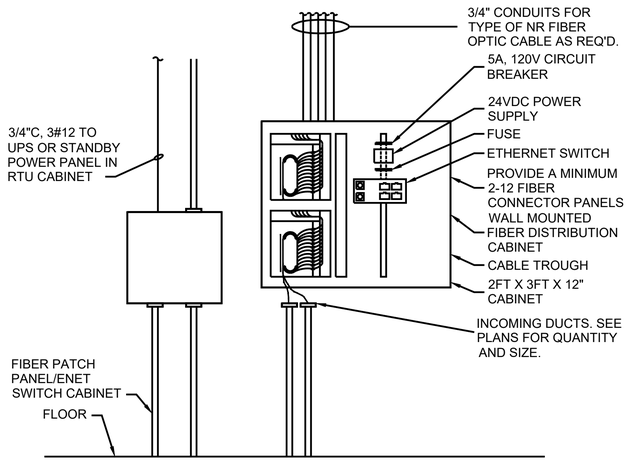

TYPICAL FIBER OPTIC DISTRIBUTION CABINET

NTS

NOTES:
1. PROVIDE FAN OUT KITS FOR ARMORED MULTI-FIBER UNDERGROUND CABLES.
2. ONLY TOP AND BOTTOM CONDUIT ENTRY INTO PANEL ALLOWED.
3. ALL CABLE AND WIRE ENTERING FOPP MUST BE TERMINATED WITHIN PANEL. NO PASS-THRU WIRE OR CABLE ALLOWED.

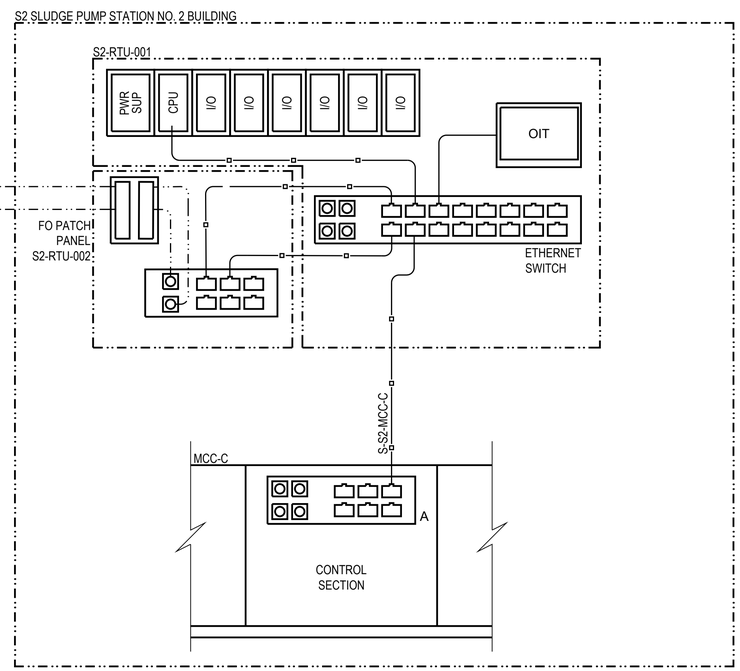

1 S2-RTU-001 NETWORK DIAGRAM

- SCALE: NONE

GENERAL NOTES:

1. FIBER OPTIC PATCH PANELS TO BE INSTALLED WHERE FIBER ENTERS A STRUCTURE ARE NOT SHOWN.

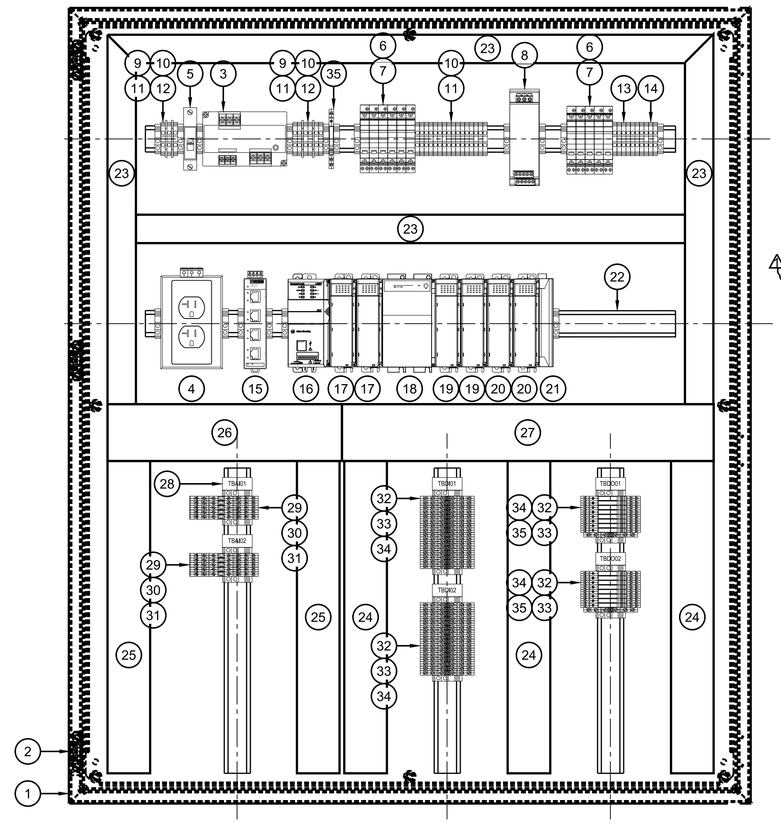

BILL OF MATERIAL

ITEM	QTY	PART NUMBER	DESCRIPTION
1	1	CSD423612	HOFFMAN CONCEPT STEEL ENCLOSURE 42 X 36 X 12
2	1	CP4236	HOFFMAN 42 X 36 CONCEPT STEEL BACKPLANE
3	1	ADPH12015	EATON AEGIS POWERLINE FILTER, HYBRID, 120 VAC, 15A, WITH LED
4	1	5600525	PHOENIX CONTACT DIN MOUNT DUPLEX POWER OUTLET, 20 AMP
5	1	MG17406	SQUARE D 15 AMP THERMOMAGNETIC DIN MOUNT CIRCUIT BREAKER
6	11	2801305	PHOENIX CONTACT THERMOMAGNETIC BREAKER BASE ELEMENT
7	11	2800837	PHOENIX CONTACT THERMOMAGNETIC 2 AMP BREAKER
8	1	2866750	PHOENIX CONTACT QUINT POWER SUPPLY, 5 AMP 24 VDC
9	3	3044102	PHOENIX CONTACT 6.2mm, 41A, UT MODULAR TERMINAL BLOCK GREY
10	11	3045130	PHOENIX CONTACT 6.2mm, 41A, UT MODULAR TERMINAL BLOCK WHITE
11	11	3044128	PHOENIX CONTACT 6.2mm, UT GROUND TERMINAL BLOCK
12	4	3047167	PHOENIX CONTACT 2.2mm, PARTITION PLATE
13	10	3045143	PHOENIX CONTACT 6.2mm, 41A, UT MODULAR TERMINAL BLOCK BLACK
14	23	0800886	PHOENIX CONTACT END STOP
15	1	2891152	PHOENIX CONTACT FL ETHERNET SWITCH
16	1	5069-L320ER	ALLEN BRADLEY COMPACTLOGIX PROCESSOR MODULE
17	2	1769-IF4	ALLEN BRADLEY COMPACTLOGIX 4 CHANNEL ANALOG INPUT MODULE
18	1	1769-PA4	ALLEN BRADLEY COMPACTLOGIX PA4 POWER SUPPLY
19	2	1769-IA16	ALLEN BRADLEY COMPACTLOGIX 16 CHANNEL 120 VAC INPUT MODULE
20	2	1769-OW8I	ALLEN BRADLEY COMPACTLOGIX 8 CHANNEL RELAY OUTPUT MODULE
21	1	1769-ECR	ALLEN BRADLEY COMPACTLOGIX RIGHT END CAP
22	2	OMEGA3AF	IBOCO DIN RAIL DEEP STANDARD PUNCHED, 6FT
23	2	T1E-1540G	IBOCO WIRE DUCT, 1.5" WIDE, 4" HIGH, 6FT, GREY
24	1	T1E-2240G	IBOCO WIRE DUCT, 2.2" WIDE, 4" HIGH, 6FT, GREY
25	1	T1E-2240W	IBOCO WIRE DUCT, 2.2" WIDE, 4" HIGH, 6FT, WHITE
26	1	T1E-3040W	IBOCO WIRE DUCT, 3" WIDE, 4" HIGH, 6FT, WHITE
27	1	T1E-3040G	IBOCO WIRE DUCT, 3" WIDE, 4" HIGH, 6FT, GREY
28	6	0800307	PHOENIX CONTACT TERMINAL STRIP MARKER
29	10	3011067	PHOENIX CONTACT SENSOR ACTUATOR TB WITH GROUND
30	10	0921037	PHOENIX CONTACT LED FUSE PLUG, 24 VDC
31	20	GGM1/2	FERRAZ SHAWMUT FAST-ACTING 1/2 AMP 5X20 FUSE
32	35	2774237	PHOENIX CONTACT SENSOR ACTUATOR TERMINAL BLOCK
33	35	0921053	PHOENIX CONTACT LED FUSE PLUG, 250 VAC
34	40	GSC2	FERRAZ SHAWMUT SLOW-BLOW 2 AMP 5X20 FUSE
35	17	2966197	PHOENIX CONTACT PLC RELAY 120 VAC, 6 AMP
36			
37			
38			
39			
40			

NOTES:

1. THIS ELEVATION AND BILL OF MATERIAL IS TYPICAL FOR WALL-MOUNTED RTU CABINETS. ACTUAL LAYOUT AND MATERIAL SHALL BE DESIGNED BY THE INTEGRATOR PER THE SPECIFICATIONS.

2 TYPICAL WALL-MOUNTED RTU CABINET

- SCALE: NONE

NO.	DATE	REVISION	BY	APVD
1	2/25/25	CHANGES AFTER 90% DESIGN	TCA	BGY

VERIFY SCALE
BAR IS ONE INCH ON ORIGINAL DRAWING.
0 1"
IF NOT ONE INCH ON THIS SHEET, ADJUST SCALES ACCORDINGLY.

DESIGN TCA
DRAWN TCA
CHECKED BGY
APPROVED JHM

WATERWORKS ENGINEERS

provo WELCOME HOME

PROVO CITY
PUBLIC WORKS DEPT
PROVO WRF
PHASE 1, ELEC. UPGRADES
PACKAGE A - S2 RE-FEED

INSTRUMENTATION
S2-RTU-001 NETWORK DIAGRAM AND TYPICAL RTU ELEVATION

LICENSED PROFESSIONAL ENGINEER
BRIAN G. YOUNG
NO.8841511
02/26/2025
STATE OF UTAH

DATE FEBRUARY 2025
PROJECT NUMBER 19-002
DRAWING NUMBER N-GN-012
SHEET OF