SINGLE LINE DIAGRAM SYMBOLOGY

MEDIUM VOLTAGE VACUUM DRAWOUT STARTER

52 — MEDIUM VOLTAGE DRAWOUT BREAKER

LOC — THERMAL MAGNETIC CIRCUIT BREAKER
X = LOCATION
100 — FRAME (AMPS)
20 — TRIP (AMPS)

LOC — MCP CIRCUIT BREAKER
X = LOCATION
7 — CONTINUOUS AMPS
MCP — TRIP SETTING BASED ON MOTOR HORSEPOWER

LOW VOLTAGE DRAWOUT CIRCUIT BREAKER
800 / 400
(L-S-I-G)
- L — LONG TIME
- S — SHORT TIME
- I — INSTANTANEOUS
- G — GROUND FAULT

X — COMBINATION NEMA RATED STARTER WITH MCP DISCONNECT AND CONTROL POWER TRANSFORMER
40 / MCP
ROMAN NUMERAL = NEMA SIZE
X = LOCATION
* = STARTER TYPE
- (BLANK) FULL VOLTAGE NON-REVERSING
- FVR — FULL VOLTAGE REVERSING
- 2S2W — TWO SPEED TWO WINDING
- 2S1W — TWO SPEED ONE WINDING

X / VFD — VARIABLE FREQUENCY DRIVE
X = AMPERE RATING

X / RVSS — REDUCED VOLTAGE SOLID STATE STARTER
X = AMPERE RATING

X / Y — PACKAGED EQUIPMENT
X = EQUIPMENT SIZE
Y = TYPE (KW, KVA, OR HP AS INDICATED)

K — KEY INTERLOCK

GENERATOR
RATINGS AS INDICATED

TRANSFER SWITCH (MANUAL OR AUTOMATIC)
RATINGS AS INDICATED

AS — AMMETER SWITCH

VS — VOLTMETER SWITCH

X — METERING DEVICE
X = METER TYPE
- WHM — WATT HOUR METER
- WM — WATT METER
- AM — AMMETER
- VM — VOLTMETER
- PFM — POWER FACTOR METER

480/120 (3) — POTENTIAL TRANSFORMER
RATIO AND NUMBER OF PT'S AS INDICATED

100/5 (3) — CURRENT TRANSFORMER
RATIO AND NUMBER OF CT'S AS INDICATED

GROUND FAULT CURRENT TRANSFORMER
RATIO AS INDICATED

5A — FUSE
SIZE AS INDICATED

X — MOTOR
X = HORSEPOWER
* = FULL LOAD AMPS

DELTA-WYE TRANSFORMER WITH
SECONDARY KVA SIZE AND VOLTAGE
RATIO AS INDICATED

X AMPS
Y SECONDS
51G — DELTA-WYE TRANSFORMER
WITH RESISTANCE GROUNDED
SECONDARY AND GROUND
FAULT RELAYING
X - GROUNDING RESISTOR AMPS
Y - GROUNDING RESISTOR SECONDS

FUSED CONTROL POWER TRANSFORMER

MOV — ELECTRICAL MOTOR OPERATED VALVE, WITH
INTEGRAL REVERSING STARTER

30A — DISCONNECT SWITCH
SIZE AS INDICATED

30A / 30A — FUSED DISCONNECT SWITCH
SIZE AS INDICATED

CAPACITOR

SPD — SURGE PROTECTIVE DEVICE

SSM — SOLID STATE METERING DEVICE

SSMP — SOLID STATE MOTOR PROTECTIVE DEVICE

LIGHTNING ARRESTOR AND SURGE CAPACITOR

* (#) — ANSI RELAY DEVICE
(#) = QUANTITY
* = ANSI DEVICE

25	SYNCHRONISM CHECK RELAY
27	UNDERVOLTAGE
27/47	UNDERVOLTAGE, PHASE SEQUENCE, UNBALANCED VOLTAGE
32	DIRECTIONAL POWER RELAY
41	FIELD CONTACTOR
43	SELECTOR SWITCH
49	HIGH OIL TEMPERATURE
50/51	INSTANTANEOUS AND TIME OVERCURRENT
50/51N	INSTANTANEOUS AND TIME RESIDUALLY CONNECTED GROUND OVERCURRENT
51G	GROUND FAULT
60	VOLTAGE BALANCE
62	TIME DELAY
63	SUDDEN PRESSURE
67	AC DIRECTIONAL CURRENT RELAY
71L	LOW OIL LEVEL
81	FREQUENCY RELAY
83	CONTROL POWER TRANSFORMER
86	LOCKOUT
87TL	TRANSFORMER DIFFERENTIAL
87M	MOTOR DIFFERENTIAL

SCHEMATIC DIAGRAM SYMBOLOGY

L O R — THREE - POSITION SELECTOR SWITCH

L R — TWO - POSITION SELECTOR SWITCH

THREE - POSITION SPRING RETURN-TO-CENTER
MOMENTARY CONTACT SWITCH

SINGLE POLE TOGGLE SWITCH

VACUUM OR PRESSURE SWITCH
CLOSE ON RISING PRESSURE

VACUUM OR PRESSURE SWITCH
OPEN ON RISING PRESSURE

FLOAT LEVEL SWITCH
CLOSE ON RISING LEVEL

FLOAT LEVEL SWITCH
OPEN ON RISING LEVEL

NORMALLY OPEN

NORMALLY CLOSED

NORMALLY OPEN HELD CLOSED

NORMALLY CLOSED HELD OPEN

MAINTAINED POSITION

TEMPERATURE SWITCH
CLOSE ON RISING TEMPERATURE

TEMPERATURE SWITCH
OPEN ON RISING TEMPERATURE

FLOW SWITCH
CLOSE ON INCREASING FLOW

FLOW SWITCH
OPEN ON INCREASING FLOW

TORQUE SWITCH
OPEN ON INCREASING TORQUE

TORQUE SWITCH
CLOSES ON INCREASING TORQUE

1 — LOCATION SYMBOL
LEGEND SHOWN ON SCHEMATIC DRAWINGS
ALL DEVICES ARE LOCATED IN THE MCC
UNLESS INDICATED OTHERWISE

DI — DIGITAL INPUT TO PLC/RTU/DCS

DIGITAL OUTPUT FROM PLC/RTU/DCS
NORMALLY OPEN

DIGITAL OUTPUT FROM PLC/RTU/DCS
NORMALLY CLOSED

AI — ANALOG INPUT TO PLC/RTU/DCS
4-20 mA (UNLESS INDICATED OTHERWISE)

AO — ANALOG OUTPUT FROM PLC/RTU/DCS
4-20 mA (UNLESS INDICATED OTHERWISE)

SV — SOLENOID VALVE

SOLENOID VALVE

E-STOP PUSHBUTTON

X — CONTROL RELAY OR COIL
X = DEVICE
- CR — CONTROL RELAY
- TD — TIME DELAY RELAY (TIMING RANGE AS INDICATED)
- M — MOTOR STARTER
- PC — PHOTOCELL

NORMALLY OPEN CONTACT

NORMALLY CLOSED CONTACT

XXXX — NORMALLY OPEN CONTACT LINE REFERENCE

XXXX — NORMALLY CLOSED CONTACT LINE REFERENCE

TIMED CONTACTS
CONTACT ACTION IS DELAYED AFTER COIL IS:

ENERGIZED

TD1 — NORMALLY OPEN WITH TIME DELAY CLOSING

TD1 — NORMALLY CLOSED WITH TIME DELAY OPENING

DE-ENERGIZED

TD1 — NORMALLY OPEN WITH INSTANT CLOSING AND TIME DELAY OPENING

TD1 — NORMALLY CLOSED WITH INSTANT OPENING AND TIME DELAY CLOSING

START — NORMALLY OPEN PUSHBUTTON

STOP — NORMALLY CLOSED PUSHBUTTON

OFF ON — NO/NC MAINTAINED PUSHBUTTON

X — PILOT LIGHT
X = LENS COLOR
- R — RED
- G — GREEN
- A — AMBER
- W — WHITE

X — PILOT LIGHT (PUSH-TO-TEST)
X = LENS COLOR (SEE ABOVE)

HORN

ETM — ELAPSED TIME METER

HEATER

GROUND CONNECTION

CROSSING OF CONDUCTORS - NOT CONNECTED

CROSSING OF CONDUCTORS - CONNECTED

FUSE

VOLTAGE SURGE SUPPRESSOR

Stantec
2890 E Cottonwood Pkwy STE 300
Salt Lake City, UT 84121
Tel: (801) 617-3200
www.stantec.com

The Contractor shall verify and be responsible for all dimensions. DO NOT scale the drawing - use only dimensions shown or as calculated by Stantec. Report any errors, omissions or conflicts to Stantec. The Copyrights to all designs and drawings are the property of Stantec. Reproduction or use for any purpose other than that authorized by Stantec is forbidden.

Consultant

Revision	By	Appd	YYYY.MM.DD

Issued	By	Appd	YYYY.MM.DD
0 CONSTRUCTION SET	MB	JCR	2024.03.18

Permit/Seal

REGISTERED PROFESSIONAL ENGINEER #6677342 KEITH E. SMITH 03/19/2024 STATE OF UTAH

Client/Project
MAGNA WATER DISTRICT

MAGNA WATER
RECLAMATION FACILITY
"INFLUENT DESIGN PROJECT"
Magna, UT

Project No.: 181301587
File Name: 015870IE-001
Scale: NO SCALE

BF	KS	DR	2024.03.18
Dwn.	Dsgn.	Chkd.	YYYY.MM.DD

Title
SYMBOLS - I

Revision: Sheet: 133 of 160
Drawing No.
E-001

C:\Users\keamith\dc\accdocs\stantec.com\ut\proj\181301587_magna_influent_design\project files\01_wp\13_electrical\015870ie-001
2024.03.14 9:37:21 AM

ORIGINAL SHEET - ANSI D

PLAN SYMBOLOGY

RECEPTACLES

X-#
*
120V DUPLEX RECEPTACLE, NEMA CONFIGURATION 5-20R (WALL MOUNT)
X = PANELBOARD DESIGNATION
# = CIRCUIT DESIGNATION
* = TYPE
WP WEATHERPROOF
XP EXPLOSION PROOF
GFCI GROUND FAULT CIRCUIT INTERRUPTER

120V DUPLEX RECEPTACLE, NEMA CONFIGURATION 5-20R (FLOOR MOUNT)

X
SINGLE SPECIAL PURPOSE RECEPTACLE, 240V 1 PHASE
X = AMPERAGE

X
WELDING RECEPTACLE
X = AMPERAGE

X
SPECIAL PURPOSE RECEPTACLE, 480 VAC
X = AMPERAGE

TELEPHONE OUTLET - FLOOR TYPE

TELEPHONE OUTLET - WALL TYPE

COMPUTER/DATA OUTLET - FLOOR TYPE

COMPUTER/DATA OUTLET - WALL TYPE

CONDUIT AND RACEWAY SYMBOLOGY

EXPOSED OR CONCEALED CONDUIT

CONDUIT RUN (UNDERGROUND OR IN CONCRETE)

CONDUIT RUN (CHANGE IN ELEVATION)

CONDUIT TURNING UP

CONDUIT TURNING DOWN

CONDUITS GROUPED TOGETHER BUT SHOWN AS A SINGLE LINE FOR CLARITY

CONDUIT FROM FLOOR ABOVE TO FLOOR BELOW

CONDUIT CAPPED, OR SEALED

HOMERUN TO EQUIPMENT INDICATED (3/4 " CONDUIT, 2 #12, 1 #12 GND UNLESS INDICATED OTHERWISE)

X
RACEWAY BOX
X = BOX TYPE
MH MANHOLE
HH HANDHOLE
PB PULLBOX

J
JUNCTION BOX OR FITTING

MISCELLANEOUS ELECTRICAL SYMBOLOGY

POWER PANEL

DISCONNECT SWITCH

M
MOTOR

T
THERMOSTAT

HORN

COMBINATION STARTER

$M
MANUAL MOTOR STARTER

REV 010119

FIRE PROTECTION SYMBOLOGY

F
FIRE ALARM HORN WITH STROBE

A F
FIRE ALARM LOUDSPEAKER WITH AMPLIFIER

FA
FIRE ALARM PULL STATION

F
FIRE ALARM STROBE

F
FIRE ALARM BELL WITH STROBE

FS
FIRE SUPPRESSION SWITCH

ER
END-OF-LINE TERMINATOR

*
DETECTOR
X = TYPE
SD SMOKE DETECTOR
HD HEAT DETECTOR
CD COMBINATION DETECTOR

SECURITY & COMM SYSTEMS SYMBOLOGY

I *
INTERCOM SPEAKER
* = TYPE (REFER TO SPECIFICATIONS)

I *
INTERCOM SPEAKER WITH STROBE LIGHT
* = TYPE (REFER TO SPECIFICATIONS)

I
INTERCOM WALL JACK

HS I
INTERCOM HANDSET - WALL MOUNTED

VC *
VIDEO CAMERA
* = TYPE
F FIXED
PTZ PAN-TILT-ZOOM

*
SECURITY ACCESS DEVICE
* = TYPE
CR CARD READER
KS KEY SWITCH
PS DIGITAL KEYPAD

LIGHTING SYMBOLOGY

A
X-#a
PENDANT OR CEILING MOUNT LUMINAIRE
A = LUMINARE TYPE
X = LIGHTING PANEL DESIGNATION
# = CIRCUIT NUMBER
a = SWITCH DESIGNATION

PENDANT OR CEILING MOUNT LUMINAIRE - UNSWITCHED (NIGHT LIGHT)

WALL MOUNTED LUMINAIRE

POLE, BRACKET, ARM, AND STREETLIGHT

LINEAR LUMINAIRE

LINEAR LUMINAIRE - UNSWITCHED

EMERGENCY LUMINAIRE
BATTERY OPERATED

EXIT LIGHT, ARROW INDICATE DIRECTION OF EXIT, SHADING INDICATES FACE

A
*
LUMINAIRE CALLOUT
A = LUMINAIRE TYPE
* = APPROXIMATE MOUNTING HEIGHT AFF
CLG = CEILING MOUNT
(SEE LUMINAIRE SCHEDULE FOR MORE DETAILS)

$ X-#a
*
LIGHT SWITCH
X = LIGHTING PANEL DESIGNATION
# = CIRCUIT DESIGNATION
a = SWITCH DESIGNATION
* = SWITCH TYPE
3 3-WAY
4 4-WAY
D DIMMER
M MANUAL MOTOR STARTER

LIGHTING PANEL

GROUNDING SYMBOLOGY

GROUND ROD AND GROUND WELL

GROUND ROD (3/4" X 10'-0")

GROUND CONNECTION - BOLTED TYPE

GROUND CONNECTION - EXOTHERMIC TYPE

BARE COPPER GROUND TO GROUND WIRE IN SLAB, OR UNDERGROUND GROUND GRID, SIZE AS NOTED

EARTH GROUNDING

Stantec
2890 E Cottonwood Pkwy STE 300
Salt Lake City, UT 84121
Tel: (801) 617-3200
www.stantec.com

The Contractor shall verify and be responsible for all dimensions. DO NOT scale the drawing - any errors or omissions shall be reported to Stantec without delay. The Copyrights to all designs and drawings are the property of Stantec. Reproduction or use for any purpose other than that authorized by Stantec is forbidden.

Consultant

Revision	By	Appd	YYYY.MM.DD

Issued	By	Appd	YYYY.MM.DD
0 CONSTRUCTION SET	MB	JCR	2024.03.18

Permit/Seal

REGISTERED PROFESSIONAL ENGINEER
#6677342
KEITH E. SMITH
03/19/2024
STATE OF UTAH

Client/Project
MAGNA WATER DISTRICT

MAGNA WATER RECLAMATION FACILITY
"INFLUENT DESIGN PROJECT"
Magna, UT

Project No.: 181301587
File Name: 015870IE-002
Scale: NO SCALE

BF	KS	DR	2024.03.18
Dwn.	Dsgn.	Chkd.	YYYY.MM.DD

Title
SYMBOLS - II

Revision:
Sheet: 134 of 160
Drawing No.
E-002

c:\users\keismith\dc\accdocs\stantec.com\ffag\181301587_magna_influent_design\project files\01_wp\13_electrical\015870ie-002
2024.03.14 9:37:29 AM

ORIGINAL SHEET - ANSI D

ELECTRICAL ABBREVIATIONS

A	AMPERE, AUTOMATIC
AC	ALTERNATING CURRENT
AF	CIRCUIT BREAKER FRAME SIZE
AM	AMMETER
ANN	ANNUNCIATOR
AS	ADJUSTABLE SPEED
AT	AMPERE TRIP
ATS	AUTOMATIC TRANSFER SWITCH
AUTO	AUTOMATIC
AWG	AMERICAN WIRE GAUGE
BATT	BATTERY
BC	BARE COPPER
BKR	BREAKER
C	CONDUIT, CLOSED
CAP	CAPACITOR
CB	CIRCUIT BREAKER
CKT	CIRCUIT
CLF	CURRENT LIMITING FUSE
COM	COMMON
COMM	COMMUNICATIONS
COMP	COMPARTMENT
CP	CONTROL PANEL
CPT	CONTROL POWER TRANSFORMER
CR	CONTROL RELAY, CARD READER
CT	CURRENT TRANSFORMER
DCS	DISTRIBUTED CONTROL SYSTEM
DISC	DISCONNECT
DISTR	DISTRIBUTION
DPDT	DOUBLE POLE DOUBLE THROW
DPST	DOUBLE POLE SINGLE THROW
E	EMERGENCY
EMT	ELECTRICAL METALLIC TUBING
ENCL	ENCLOSURE
ETM	ELAPSED TIME METER
F	FREQUENCY, FUSE, FIXED
FDR	FEEDER
FLA	FULL LOAD AMPS
FLUOR	FLUORESCENT
FM	FREQUENCY METER
FO	FIBER OPTIC
FVR	FULL VOLTAGE REVERSING
FVNR	FULL VOLTAGE NON-REVERSING
GEN	GENERATOR
GFCI	GROUND FAULT CIRCUIT INTERRUPTER
GND	GROUND
H	HAND
HD	HEAT DETECTOR
HH	HAND HOLE
HID	HIGH INTENSITY DISCHARGE
HOA	HAND-OFF-AUTOMATIC
HPS	HIGH PRESSURE SODIUM
HS	HAND SWITCH
HZ	HERTZ
IMC	INTERMEDIATE METALLIC CONDUIT
INCAND	INCANDESCENT
IND	INDICATION
INST	INSTANTANEOUS
I/O	INPUT/OUTPUT
Isc	SHORT CIRCUIT CURRENT, AMPS
ISO	ISOLATION
J, JB	JUNCTION BOX
KA	KILO AMPERES
KAIC	KILO AMP INTERRUPTING CURRENT
KCMIL	KILO CIRCULAR MILS
KVA	KILOVOLT AMPERE
L	LOCAL
LCP	LOCAL CONTROL PANEL
LCS	LOCAL CONTROL STATION
LOC	LOCAL
LOR	LOCAL-OFF-REMOTE
LOS	LOCKOUT STOP PUSHBUTTON
LP	LIGHTING PANEL
LRA	LOCKED ROTOR AMPS
LS	LEVEL SWITCH
LTG	LIGHTING
LTS	LIGHTS
M	MOTOR CONTACTOR COIL
mA	MILLIAMPERE
MCP	MOTOR CIRCUIT PROTECTOR
MLO	MAIN LUGS ONLY
MOV	MOTOR OPERATED VALVE
MS	MANUAL MOTOR STARTER
MTS	MANUAL TRANSFER SWITCH
NEUT	NEUTRAL
NP	NAMEPLATE
O	OPEN, OFF
OL	OVERLOAD
PA	PUBLIC ADDRESS
PB	PUSHBUTTON, PULLBOX
PC	PHOTOCELL
PCM	PROCESS CONTROL MODULE
PF	POWER FACTOR
PFM	POWER FACTOR METER
PH	PHASE
PL	PILOT LIGHT
PNLBD	PANELBOARD
PP	POWER PANELBOARD
POS	POSITION
POT	POTENTIOMETER
PRI	PRIMARY
PT	POTENTIAL TRANSFORMER
PTZ	PAN-TILT-ZOOM
PWR	POWER
R	REMOTE
RECPT	RECEPTACLE
RGS	RIGID GALVANIZED STEEL
RMS	ROOT MEAN SQUARE
RTU	REMOTE TERMINAL UNIT
RVSS	REDUCED VOLTAGE SOLID STATE
SEL SW	SELECTOR SWITCH
SEQ	SEQUENCE
SHLD	SHIELDED
SIG	SIGNAL
SP	SPARE
SP HTR	SPACE HEATER
SPDT	SINGLE POLE DOUBLE THROW
SPST	SINGLE POLE SINGLE THROW
SSM	SOLID STATE METER
SSMP	SOLID STATE MOTOR PROTECTOR
ST, SH	SHUNT TRIP
STR	STARTER
SSTU	SOLID STATE TRIP UNIT
SW	SWITCH
SWBD	SWITCHBOARD
SWGR	SWITCHGEAR
TACH	TACHOMETER
TB	TERMINAL BOX
TERM	TERMINAL
TM	REPEAT CYCLE TIMER
TD	TIME DELAY RELAY
TS	TEMPERATURE SWITCH
UPS	UNINTERRUPTIBLE POWER SUPPLY
V	VOLTAGE, VOLTS
VA	VOLT AMPERE
VAR	VOLT AMPERE REACTIVE
VFD	VARIABLE FREQUENCY DRIVE
VM	VOLTMETER
VP	VAPOR PROOF
W	WATTS, WIRE
WM	WATT METER
WP	WEATHERPROOF
XFMR	TRANSFORMER
XMTR	TRANSMITTER
XP	EXPLOSION PROOF

REV 010119

GENERAL ELECTRICAL NOTES

1. ALL RACEWAYS AND EQUIPMENT SHALL BE INSTALLED AND GROUNDED IN ACCORDANCE WITH THE 2020 EDITION OF THE NATIONAL ELECTRICAL CODE AND APPLICABLE LOCAL CODES.
2. THE CONTRACTOR SHALL VERIFY THE EXACT LOCATION OF TERMINAL BOXES AND CONDUIT ENTRANCES OF ALL EQUIPMENT AGAINST APPROVED SHOP DRAWINGS BEFORE STUBBING UP CONDUITS.
3. REFER TO SPECIFICATION SECTION 260533 FOR REQUIREMENTS RELATED TO FLEXIBLE CONDUIT INSTALLATION
   CONDUIT RUNS ARE SHOWN DIAGRAMMATICALLY ONLY AND SHALL BE INSTALLED IN A MANNER TO PREVENT CONFLICTS WITH EQUIPMENT OR STRUCTURAL CONDITIONS. EXPOSED CONDUIT SHALL BE INSTALLED PARALLEL OR PERPENDICULAR TO BEAMS AND WALLS. REFER TO SPECIFICATION SECTION 260533.
4. CONDUIT STUB-UPS SHALL NOT BE MORE THAN 6 INCHES FROM THE CENTERLINE OF TERMINAL BOXES.
5. IN THE EVENT OF INTERFERENCE BETWEEN ELECTRICAL EQUIPMENT SHOWN ON THE DRAWINGS AND OTHER EQUIPMENT, THE CONTRACTOR SHALL NOTIFY THE ENGINEER IN WRITING AND THE ENGINEER SHALL APPROVE PROPOSED CHANGES BEFORE THEY ARE MADE.
6. ALL SURFACE MOUNTED PANELS AND PANELBOARDS ON THE INTERIOR OF EXTERIOR WALLS ABOVE GRADE OR IN OTHER LOCATIONS CONSIDERED DAMP OR WET SHALL BE MOUNTED SO AS TO MAINTAIN A 1/4 INCH (MINIMUM) AIR SPACE BETWEEN THE ENCLOSURE AND THE WALL.
7. LOCATION OF PULLBOXES ARE APPROXIMATE. THE CONTRACTOR SHALL COORDINATE EXACT LOCATION WITH MECHANICAL PIPING AND SHALL BE 6 INCHES (MINIMUM) AWAY FROM MECHANICAL PIPING FLOW LINES.
8. ONLY MAJOR PULLBOXES ARE SHOWN. THE CONTRACTOR SHALL PROVIDE ADDITIONAL PULLBOXES WHERE REQUIRED TO MAKE A WORKABLE INSTALLATION.
9. THE WORK SHALL BE PERFORMED IN ACCORDANCE WITH THE DETAILS WHETHER OR NOT THEY ARE REFERENCED ON THE DRAWINGS.
10. ALL CONDUIT RUNS CROSSING EXPANSION JOINTS SHALL HAVE EXPANSION OR EXPANSION AND DEFLECTION TYPE FITTINGS. FOR LOCATIONS OF EXPANSION JOINTS, REFER TO THE STRUCTURAL DWGS.
11. LUMINAIRES SHALL BE MOUNTED ACCORDING TO THE MOUNTING HEIGHT GIVEN ON THE DRAWINGS, WITH THE DISTANCE BEING MEASURED FROM THE BOTTOM OF THE LUMINAIRE TO THE FINISHED FLOOR. THE APPROPRIATE MOUNTING BRACKETS AND HARDWARE SHALL BE SUPPLIED.
12. ALL PANELBOARDS SHALL BE MOUNTED SO THAT THE DISTANCE FROM THE CENTERLINE OF THE TOP CIRCUIT BREAKER OPERATING HANDLE IN THE UPPERMOST POSITION TO THE FINISHED FLOOR SHALL NOT EXCEED 6'-7".
13. THE WIRING DIAGRAMS, QUANTITY AND SIZE OF WIRES AND CONDUIT REPRESENT A SUGGESTED ARRANGEMENT BASED UPON SELECTED STANDARD COMPONENTS OF ELECTRICAL EQUIPMENT. MODIFICATIONS ACCEPTABLE TO THE ENGINEER MAY BE MADE BY THE CONTRACTOR TO ACCOMMODATE EQUIPMENT ACTUALLY PURCHASED. THE BASIC SEQUENCE AND METHOD OF CONTROL MUST BE MAINTAINED AS INDICATED ON THE DRAWINGS AND/OR SPECIFICATIONS.
14. CONNECTIONS BETWEEN RIGID CONDUIT AND MOTOR TERMINAL BOXES OR SIMILAR EQUIPMENT SUBJECT TO VIBRATION SHALL BE FLEXIBLE LIQUID-TIGHT CONDUIT.
15. CONDUITS SHALL BE TERMINATED SO AS TO PERMIT NEAT CONNECTION TO MOTORS AND OTHER EQUIPMENT.
16. CONDUITS FOR FUTURE EQUIPMENT OR EXTENSIONS SHALL BE TERMINATED AS SHOWN IN DETAIL OR AS SPECIFIED.
17. MCC AND SWITCHGEAR COMPARTMENT DESIGNATIONS SHALL BE AS FOLLOWS:

    BLANK/SPACE: CONTAINS NECESSARY BUS AND HARDWARE FOR FUTURE ADDITION OF BREAKERS OR STARTERS.

    SPARE: CONTAINS A COMPLETE INSTALLED BREAKER OR STARTER AVAILABLE FOR FUTURE USE.
18. ALL MOTOR STARTER CONTROL POWER TRANSFORMERS SHALL BE SIZED TO PROVIDE SUFFICIENT VOLT-AMPERE CAPACITY FOR OPERATING ALL LOCAL AND REMOTE ELECTRICAL DEVICES ASSOCIATED WITH CONTROL OF THE MOTOR IN ADDITION TO THE STARTER COIL.
19. MOTOR CONTROL CENTERS AND ALL FREE STANDING PANELS SHALL BE SET ON CONCRETE HOUSEKEEPING PADS WITH LEVELING CHANNELS EMBEDDED IN THE PAD.
20. ALL RECEPTACLES IN OUTDOOR AND ANTICIPATED WET AREAS SHALL BE GROUND FAULT CIRCUIT INTERRUPTER RECEPTACLES WITH WEATHERPROOF COVERS.
21. ELECTRICAL CONTRACTOR SHALL VISIT THE SITE PRIOR TO BIDDING THE PROJECT TO VERIFY THE SCOPE OF WORK WITH FIELD CONDITIONS. PARTICULAR ATTENTION SHOULD BE GIVEN TO NEW CONDUIT RUNS IN EXISTING BUILDINGS.
22. EQUIPMENT LOCKOUTS SHALL BE IN STRICT ACCORDANCE WITH OWNER'S REQUIREMENTS.
23. FOR LIGHTING AND RECEPTACLE SYSTEMS, ONLY CIRCUIT NUMBERS ARE SHOWN. CONTRACTOR SHALL PROVIDE ALL NECESSARY CONDUITS, WIRES, FITTINGS, JUNCTION BOXES AND ALL NECESSARY COMPONENTS SHOWN OR NOT SHOWN ON THE DRAWINGS, TO MAKE THE ELECTRICAL INSTALLATION COMPLETE AND OPERATIONAL. ALL CONDUIT RUNS SHALL BE CONCEALED UNLESS INDICATED OTHERWISE. CIRCUIT LOADING SHALL BE AS INDICATED IN THE PANEL SCHEDULES. ALL LIGHTING AND RECEPTACLE CIRCUITS SHALL INCLUDE GROUND WIRE.
24. HVAC TEMPERATURE CONTROL WIRING SHALL BE THE RESPONSIBILITY OF THE TEMPERATURE CONTROLS SUBCONTRACTOR UNDER DIVISION 23, AND IS NOT SHOWN ON THE ELECTRICAL DRAWINGS. 120, 208, AND 420 VOLT POWER WIRING SHALL BE PROVIDED AS INDICATED AND AS A PART OF THE ELECTRICAL DIVISION 28 WORK.

LIGHTNING PROTECTION NOTES

1. GENERAL
   A SYSTEM OF LIGHTNING PROTECTION SHALL BE PROVIDED AND INSTALLED IN COMPLIANCE WITH THE PROVISIONS OF THE LATEST EDITION OF NFPA 780 LIGHTNING PROTECTION CODE AS ADOPTED BY THE NATIONAL FIRE PROTECTION ASSOCIATION.
2. AIR TERMINALS
   AIR TERMINALS SHALL BE 1/2IN x 24IN SOLID COPPER AND SHALL EXTEND AT LEAST 18 INCHES ABOVE THE TOP OF THE TANK. AIR TERMINALS BASES SHALL BE CAST BRONZE WITH STAINLESS STEEL BOLT PRESSURE CABLE CONNECTIONS.
3. CONDUCTORS
   CONDUCTORS SHALL CONSIST OF U.L. LISTED 29 STRANDS OF 17 GAUGE COPPER WIRE WEIGHING 190 LBS. PER 1000 FEET AND INSTALLED IN ACCORDANCE WITH THE U.L. CODE. (CLASS 1)
4. GROUND TERMINALS
   ALL GROUNDING TERMINALS (RODS) SHALL BE NO LESS THAN 3/4 IN DIA AND 10 FT LONG, AND SHALL BE COPPER-CLAD STEEL OR SOLID COPPER. GROUND TERMINALS SHALL BE DRIVEN TO A MINIMUM DEPTH OF 10 FT. GROUNDING TERMINALS SHALL BE LOCATED AT THE BASE OF THE STRUCTURE AND GROUND CONNECTIONS SHALL BE MADE AROUND THE PERIMETER OF THE STRUCTURE AND IN NO CASE SHALL AVERAGE OVER 100 FT APART.
5. CABLE CONNECTORS
   ALL CABLE CONNECTORS SHALL BE CAST BRONZE WITH SCREW TYPE STAINLESS STEEL BOLTS AND NUTS. CONDUCTOR FASTENERS SHALL BE AN APPROVED TYPE OF NON-CORROSIVE METAL, HAVE AMPLE STRENGTH TO SUPPORT CONDUCTORS AND SHALL BE SPACED 3 FT ON CENTERS.
6. INTERCONNECTION OF METALS
   ALL METAL BODIES WITHIN 6 FT OF THE CONDUCTOR SHALL BE BONDED TO THE SYSTEM WITH APPROVED FITTINGS AND CONDUCTORS. CONNECTIONS BETWEEN DISSIMILAR METALS SHALL BE MADE WITH APPROVED BIMETALLIC CONNECTIONS. PRIMARY BONDS FOR CONDUCTING METAL BODIES SHALL BE BONDED WITH APPROPRIATE FITTINGS AND FULL SIZE CONDUCTORS, AND SHALL CONSIST OF, BUT NOT LIMITED TO THE FOLLOWING: LADDER AND RAIL SYSTEMS, TANK VENTS AND PIPING. ALUMINUM TO COPPER CONNECTIONS SHALL BE MADE WITH BIMETALLIC CONNECTORS.
7. COMMON GROUNDING
   ALUMINUM TO COPPER CONNECTIONS SHALL BE MADE WITH BIMETALLIC CONNECTORS. GROUNDS FOR ELECTRICAL AND TELEPHONE SERVICES, AND LIGHTNING GROUNDS SHALL BE TIED TOGETHER TO FORM A COMMON GROUND.
8. MATERIALS
   ALL LIGHTNING PROTECTION EQUIPMENT SHALL BE MANUFACTURED BY HEARY BROTHERS LIGHTNING PROTECTION CO., THOMPSON LIGHTNING PROTECTION CO., CAPITAL LIGHTNING PROTECTION CO., OR EQUAL.
9. LOCATION
   INSTALL LIGHTNING PROTECTION AT THE FOLLOWING FACILITIES:

   A. GRIT WASHING FACILITY

   B. INFLUENT PUMP STATION

ELECTRICAL DEMOLITION NOTES

1. BIDDING CONTRACTORS SHALL VISIT THE SITE TO ASSESS THE SCOPE OF DEMOLITION, REMOVAL AND MODIFICATION WORK.
2. ELECTRICAL CONTRACTOR AND THE OWNER SHALL DE-ENERGIZE ALL WIRING PRIOR TO REMOVAL OF EQUIPMENT, DEVICES, MOTORS INSTRUMENTATION, CONTROL PANELS, ETC. CONTRACTOR SHALL OBTAIN PRIOR APPROVAL FROM THE OWNER.
3. EXPOSED RACEWAYS: REMOVE CONDUIT, WIRES, AND BOXES. PATCH TO MATCH EXISTING. FINISH-ALL OPENINGS IN WALLS AND FLOORS
4. CONCEALED CONDUITS IN THE SLAB: REMOVE EXISTING WIRES TO THE EXTENT POSSIBLE AND ABANDON CONDUITS IN THE SLAB. CUT CONDUIT FLUSH AND PATCH THE FLOOR TO MATCH EXISTING
5. CONTROL PANEL: ELECTRICAL CONTRACTOR SHALL DE-ENERGIZE AND REMOVE ALL CONDUIT AND WIRE AS DESCRIBED IN NOTE 2. CONTRACTOR SHALL REMOVE PANELS AS NOTED ON THE CONTRACT DRAWINGS. REFER TO NOTE 4 ABOVE FOR DISPOSITION OF ENCASED CONDUITS.
6. MOTOR CONTROL CENTERS: DISCONNECT AND REMOVE ALL CONDUITS AND WIRING TO EXISTING STARTERS AND/OR BREAKERS, PANELBOARDS, BRANCH CIRCUITS, INTERLOCKS AND STATUS WIRING WITHIN MCC. REFER TO SECTION 260000 FOR ADDITIONAL ELECTRICAL DEMOLITION AND REMOVAL REQUIREMENTS.

Stantec
Stantec
2890 E Cottonwood Pkwy STE 300
Salt Lake City, UT 84121
Tel: (801) 617-3200
www.stantec.com

The Contractor shall verify and be responsible for all dimensions. DO NOT scale the drawing - use only dimensions that have been provided to construct this project. The Copyrights to all designs and drawings are the property of Stantec. Reproduction or use for any purpose other than that authorized by Stantec is forbidden.

Consultant

Revision	By	Appd	YYYY.MM.DD

Issued	By	Appd	YYYY.MM.DD
0 CONSTRUCTION SET	MB	JCR	2024.03.18

Permit/Seal

REGISTERED PROFESSIONAL ENGINEER
#6677342
KEITH E. SMITH
03/19/2024
STATE OF UTAH

Client/Project
MAGNA WATER DISTRICT

MAGNA WATER RECLAMATION FACILITY "INFLUENT DESIGN PROJECT"

Magna, UT

Project No.: 181301587

File Name: 0158701E-003

Scale: NO SCALE

BF	KS	DR	2024.03.18
Dwn.	Dsgn.	Chkd.	YYYY.MM.DD

Title
NOTES AND ABBREVIATIONS

Revision: Sheet: 135 of 160

Drawing No.
E-003

ORIGINAL SHEET - ANSI D

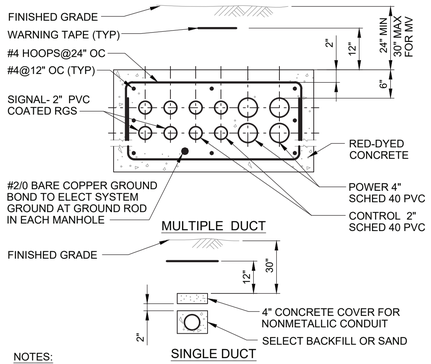

NOTES:

1. AT INTERSECTIONS WITH STRUCTURES HOOK #4'S INTO THE FOOTING OR WALL (TYP).
2. SEE DUCT BANK SECTIONS AND DETAILS FOR NUMBER AND ARRANGEMENT OF DUCTS.

E-103 TYPICAL DUCTBANK
REV 010119

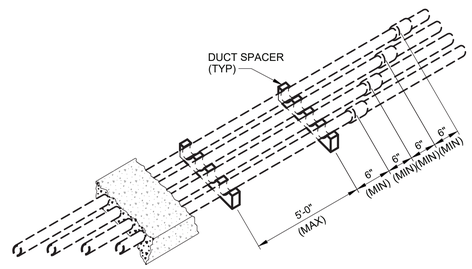

E-108 TYPICAL DUCTBANK
JOINT/SUPPORT SPACING
REV 010119

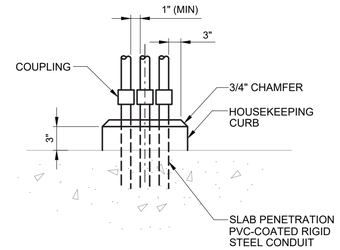

NOTE:

HOUSEKEEPING CURB REQUIRED AT ALL LOCATIONS FOR SINGLE AND MULTIPLE RISERS.

E-203 CONCRETE HOUSEKEEPING CURB
NON-HAZARDOUS LOCATIONS
REV 010119

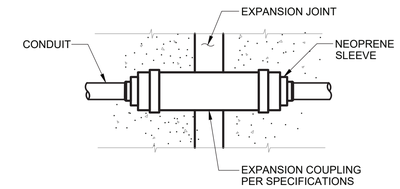

NOTE:

PROVIDE EXTERNAL BONDING JUMPER WITH METALLIC CONDUIT AND WHEN COUPLING HAS NO INTERNAL JUMPER.

E-204 EXPANSION COUPLING
REV 010119

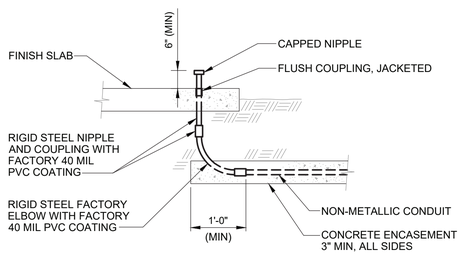

E-205 RISER FROM NON-METALLIC DUCT
REV 010119

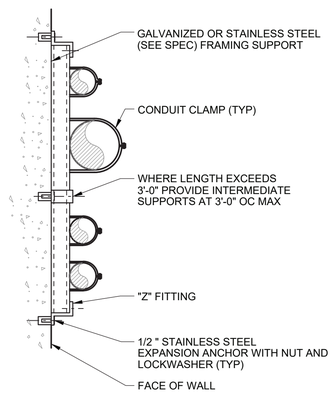

E-212 CONDUIT SUPPORT
FLUSH MOUNT
REV 010119

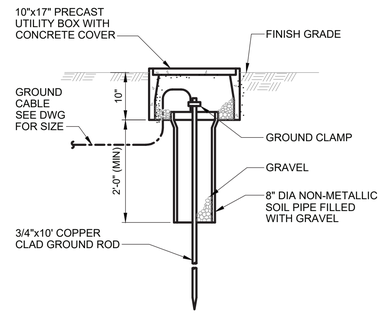

E-303 GROUND ROD AND WELL
REV 010119

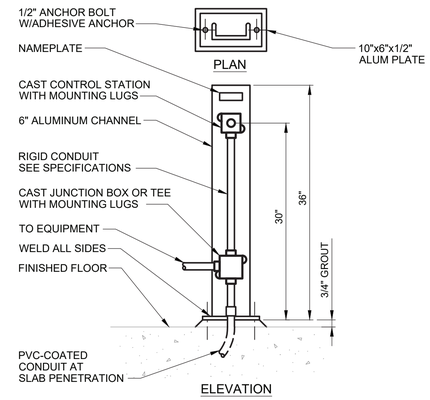

E-406 PEDESTAL MOUNTED CONTROL STATION
REV 010119

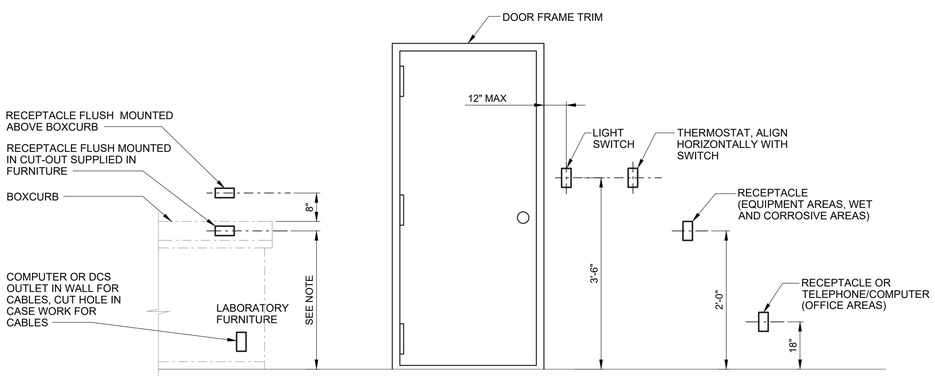

NOTE:

CONTRACTOR SHALL DETERMINE OUTLET BOX MOUNTING HEIGHT TO SUIT LABORATORY EQUIPMENT FURNISHED FOR INSTALLATION

E-450 OUTLET BOX MOUNTING
REV 010119

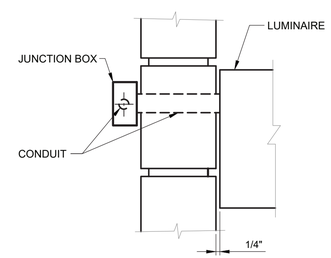

NOTES:

1. PROVIDE GASKET BETWEEN LUMINAIRE AND CONDUIT.
2. INSTALLATION SHALL BE WATERTIGHT.

E-605 WALL MOUNT LUMINAIRE
EXTERIOR WALL
REV 010119

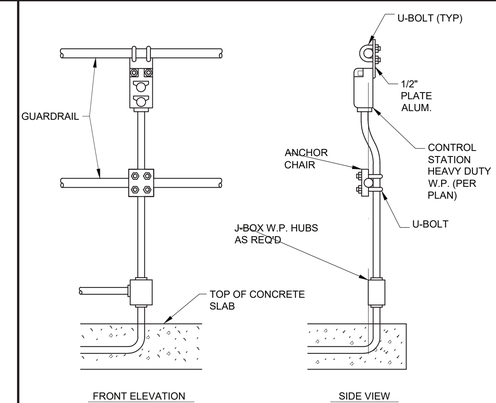

E-900 CONTROL STATION MOUNTING

Stantec
Stantec
2890 E Cottonwood Pkwy STE 300
Salt Lake City, UT 84121
Tel: (801) 617-3200
www.stantec.com

The Contractor shall verify and be responsible for all dimensions. DO NOT scale the drawing - any errors or omissions shall be reported to Stantec without delay. Reproduction or use for any purpose other than that authorized by Stantec is forbidden.
The Copyright to all design and drawings are the property of Stantec. Reproduction or use for any purpose other than that authorized by Stantec is forbidden.

Consultant

Revision	By	Appd	YYYY.MM.DD

Issued	By	Appd	YYYY.MM.DD
0 CONSTRUCTION SET	MB	JCR	2024.03.18

Permit/Seal

REGISTERED PROFESSIONAL ENGINEER #6677342 KEITH E. SMITH 03/19/2024 STATE OF UTAH

Client/Project
MAGNA WATER DISTRICT

MAGNA WATER RECLAMATION FACILITY "INFLUENT DESIGN PROJECT"
Magna, UT

Project No.: 181301587
File Name: 0158701E-004
Scale: NO SCALE

BF	KS	DR	2024.03.18
Dwn.	Dsgn.	Chkd.	YYYY.MM.DD

Title
STANDARD DETAILS

Revision: Sheet: 136 of 160
Drawing No.
E-004

ORIGINAL SHEET - ANSI D

DUCTBANK SCHEDULE

TAG	FROM	TO	CONDUIT/CABLES
DB-01	MCC-B	MH-P01	P-201A
DB-02	MH-P01	GRIT WASHING FACILITY	P-101A, P-103A, P-105A, P-107A, P-109A, P-111A, P-201B, P-305A, P-306A, C-102A, C-104A, C-106A, C-305A
	HH-S01		S-102C, S-104C, S-106C, S-203B
DB-03	MH-P01	DB-03A, DB-03B	P-101B, P-103B, P-105B, P-107B, P-109B, P-111B, P-305B, P-306B, C-102B, C-104B, C-106B, C-305B
	HH-S01		S-102B, S-104B, S-106B, S-203A
DB-03A	DB-03	HEADWORKS FACILITY	P-305B, P-306B, C-305B
DB-03B	DB-03	DB-03C, DB-03D	P-101B, P-103B, P-105B, P-107B, P-109B, P-111B, C-102B, C-104B, C-106B
			S-102B, S-104B, S-106B, S-203A
DB-03C	DB-03B	HEADWORKS FACILITY	
			S-203A
DB-03D	DB-03B	DB-03F	P-101B, P-103B, P-105B, P-107B, P-109B, P-111B, C-102B, C-104B, C-106B
DB-03E	HEADWORKS FACILITY	DB-03F	
			S-101, S-103, S-105
DB-03F	DB-03E, DB-03D	MH-P02	P-101B, P-103B, P-105B, P-107B, P-109B, P-111B, C-102B, C-104B, C-106B
		HH-S02	S-101, S-103, S-105
DB-04	MH-P02	METER VAULT	
	HH-S02		S-105
DB-05	MH-P02	INFLUENT PUMP STATION	P-101C, P-103C, P-105C, P-107C, P-109C, P-111C, C-102C, C-102F, C-104C, C-104F, C-106C, C-106F
	HH-S02		S-105
DB-05A	DB-05	GREASE PUMPS	P-103C, P-107C, P-111C, C-102F, C-104F, C-106F
DB-06	INFLUENT PUMP STATION	FE-201	S-101
		FE-202	S-103

LUMINAIRE SCHEDULE

TYPE	LUMEN OUTPUT	COLOR (K)	LAMP TYPE	VOLTS	MOUNTING	MANUFACTURER AND CATALOG NUMBER OR APPROVED EQUAL	DESCRIPTION
A	3,000	40K	LED	120V	PENDANT	HOLOPHANE - EMS-L48-3000LM-LPPCL-MD-MVOLT-40K-80CRI	48" LOW PROFILE, ENCLOSED AND GASKETED LED STRIPLIGHT, WHITE, UL LISTED FOR WET LOCATIONS
E1	-	-	LED	120V	WALL	LITHONIA - ELM6L-UVOLT-LTP-SDRT	WALL MOUNTED, TWO LAMP, EMERGENCY LIGHT. SEALED LITHIUM IRON PHOSPHATE BATTERY SHALL PROVIDE A MINIMUM OF 90 MINUTE EMERGENCY OPERATION. UNIT SHALL HAVE SELF DIAGNOSTIC AND REMOTE TESTING AND MINIMUM OF 1100 LUMEN OUTPUT
E2	-	-	LED	120V	WALL	LITHONIA - EXTL-SP2200L-UVOLT-LTP-SDRT-EHO	WALL MOUNTED, TWO LAMP, EMERGENCY LIGHT IN NEMA 4X ENSLOCURE. SEALED LITHIUM IRON PHOSPHATE BATTERY SHALL PROVIDE A MINIMUM OF 90 MINUTE EMERGENCY OPERATION. UNIT SHALL HAVE SELF DIAGNOSTIC AND REMOTE TESTING AND MINIMUM OF 2200 LUMEN OUTPUT
P	35W	40K	LED	120V	POLE	FIXTURE - LITHONIA - KAD LED-20C-530-40K-R2-MVOLT-SPD-DDBXD-PER5-DLL127F1.5 JU POLE - LITHONIA - SSA-15-6G-T35-DDBXD	POLE MOUNTED, SHOEBOX STYLE, LED AREA FIXTURE, DARK BRONZE WITH PHOTOCELL 4" X 20' SQUARE, STRAIGHT, ALUMINUM POLE WIND RATED FOR 100MPH, DARK BRONZE
W	3,140	30K	LED	120	WALL	HOLOPHANE - W4GLED-10C1000-30K-T3M-MVOLT-SPD-PCB-GYSPD	WALLPACK, LED, MEDIUM LIGHT DISTRIBUTION, GREY, WITH INEGRAL PHOTOCELL
X	-	-	LED	120V	WALL	HOLOPHANE - MEX-S-W-1-R-ELN	EXIT SIGN, UL LISTED FOR DAMP LOCATION, WHITE FACE WITH RED LETTERS, DIE-CAST ALUMINUM COMPACT HOUSING, BRUSHED ALUMINUM FACEPLATE WITH MATTE BLACK TRIM AND CLEAR LACQUER FINISH . DUAL VOLTAGE INPUT, NICKEL CADMIUM EMERGENCY BATTERY BACK UP.

PULLBOX/MANHOLE SCHEDULE

TAG	INSIDE DIMENSIONS LxWxH	COVER
MH-P01	4'x4'x6'	"POWER"
MH-P02	4'x4'x6'	"POWER"
HH-S01	3'x3'x4'	"SIGNAL"
HH-S02	3'x3'x4'	"SIGNAL"

Stantec
2890 E Cottonwood Pkwy STE 300
Salt Lake City, UT 84121
Tel: (801) 617-3200
www.stantec.com

The Contractor shall verify and be responsible for all dimensions. DO NOT scale the drawing - any errors or omissions shall be reported to Stantec without delay. The Copyrights to all designs and drawings are the property of Stantec. Reproduction or use for any purpose other than that authorized by Stantec is forbidden.

Consultant

Issued				Revision	By	Appd	YYYY.MM.DD
0	CONSTRUCTION SET	MB	JCR	2024.03.18			

Permit/Seal

REGISTERED PROFESSIONAL ENGINEER
#6677342
KEITH E. SMITH
03/19/2024
STATE OF UTAH

Client/Project
MAGNA WATER DISTRICT

MAGNA WATER RECLAMATION FACILITY "INFLUENT DESIGN PROJECT"
Magna, UT

Project No.: 181301587
File Name: 015870 1E-005
Scale: NO SCALE

BF	KS	DR	2024.03.18
Dwn.	Dsgn.	Chkd.	YYYY.MM.DD

Title
SCHEDULES

Revision: Sheet: 137 of 160
Drawing No.
E-005

ORIGINAL SHEET - ANSI D

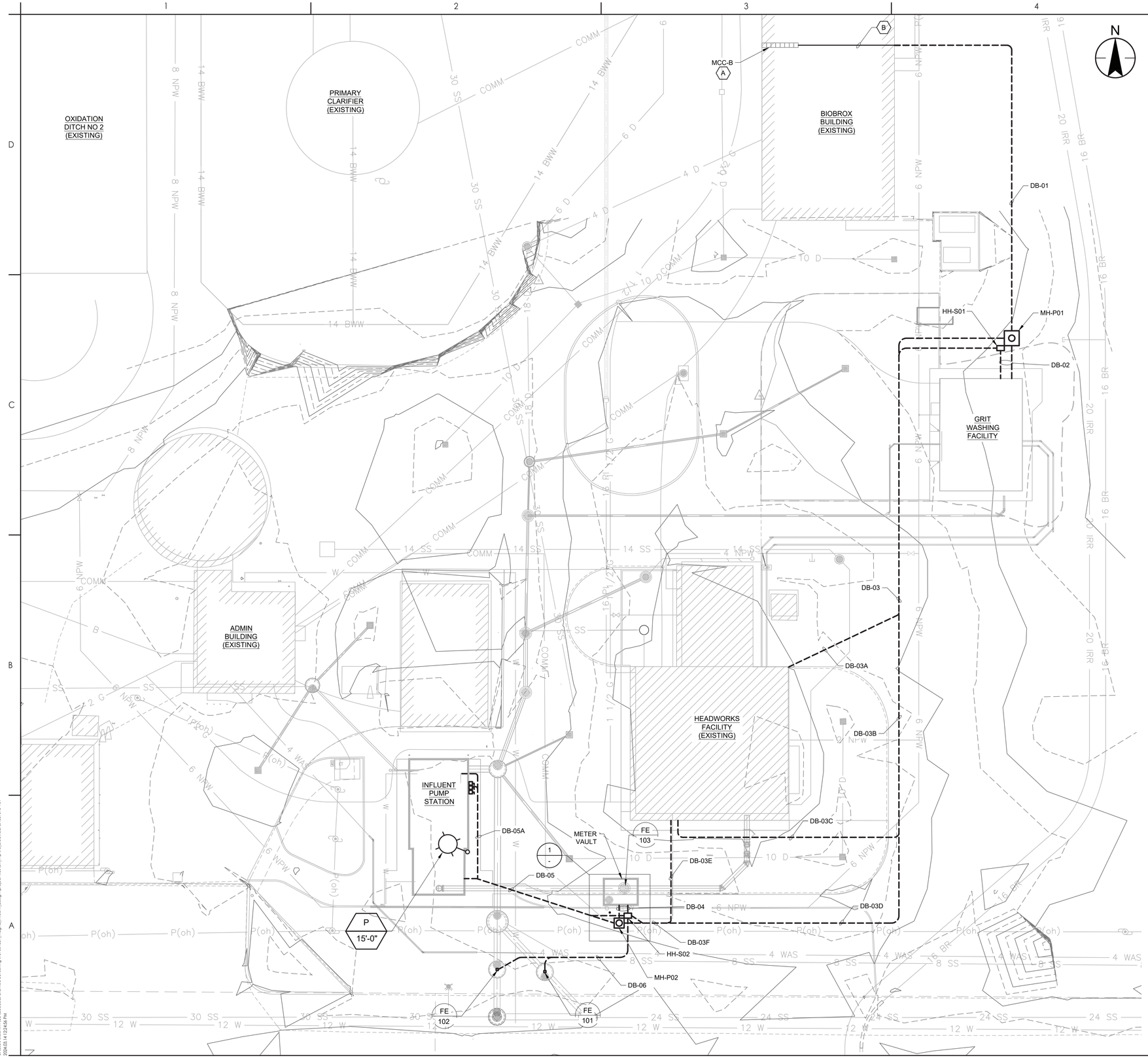

SHEET KEYNOTES

A. MCC-B LOCATED IN BIOBROX BUILDING ELECTRICAL ROOM.

B. CORDINATE WITH OWNER FOR BEST WAY TO ROUTE CONDUITS OUT OF BIOBROX BUILDING.

C. LOCATE DISCONNECT SWITCH AT LEAST 18" FROM BACK EDGE OF CURB

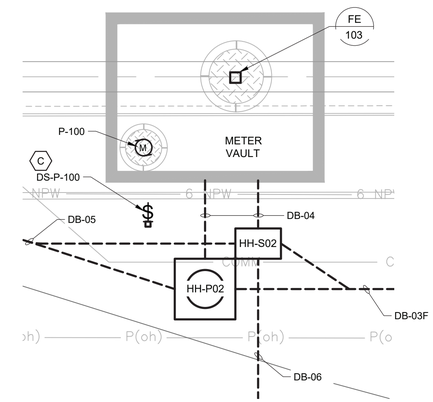

1 METER VAULT DETAIL
SCALE: 1" = 5'-0"

Stantec
Stantec
2890 E Cottonwood Pkwy STE 300
Salt Lake City, UT 84121
Tel: (801) 617-3200
www.stantec.com

The Contractor shall verify and be responsible for all dimensions. DO NOT scale the drawing - any errors or omissions shall be reported to Stantec without delay. The Copyrights to all designs and drawings are the property of Stantec. Reproduction or use for any purpose other than that authorized by Stantec is forbidden.

Consultant

Revision	By	Appd	YYYY.MM.DD

Issued	By	Appd	YYYY.MM.DD
0 CONSTRUCTION SET	MB	JCR	2024.03.18

Permit/Seal

REGISTERED PROFESSIONAL ENGINEER #6677342 KEITH E. SMITH 03/19/2024 STATE OF UTAH

Client/Project
MAGNA WATER DISTRICT

MAGNA WATER RECLAMATION FACILITY "INFLUENT DESIGN PROJECT"
Magna, UT

Project No.: 181301587
File Name: 0158701E-101
Scale: 1" = 20'

KES	KES	DR	2024.03.18
Dwn.	Dsgn.	Chkd.	YYYY.MM.DD

Title
ELECTRICAL SITE PLAN

Revision: Sheet: 138 of 160
Drawing No.
E-101

ORIGINAL SHEET - ANSI D

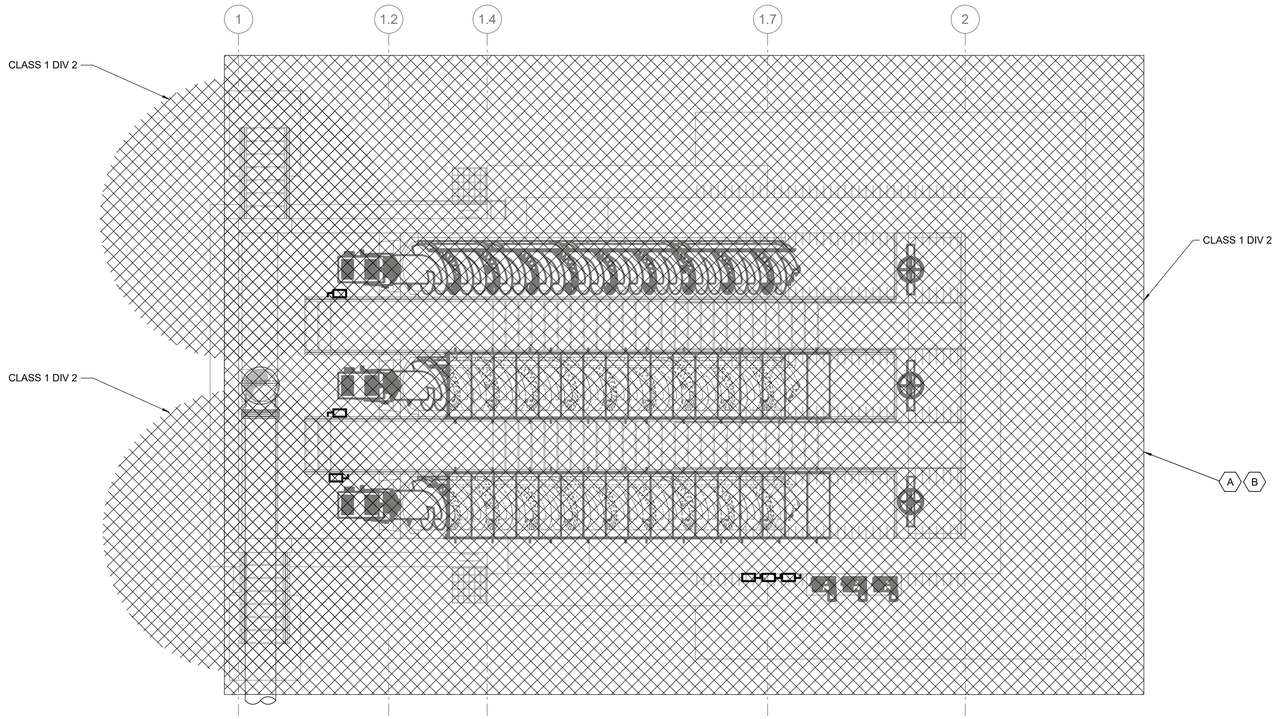

CLASSIFICATION PLAN

SCALE: 3/16" = 1'-0"

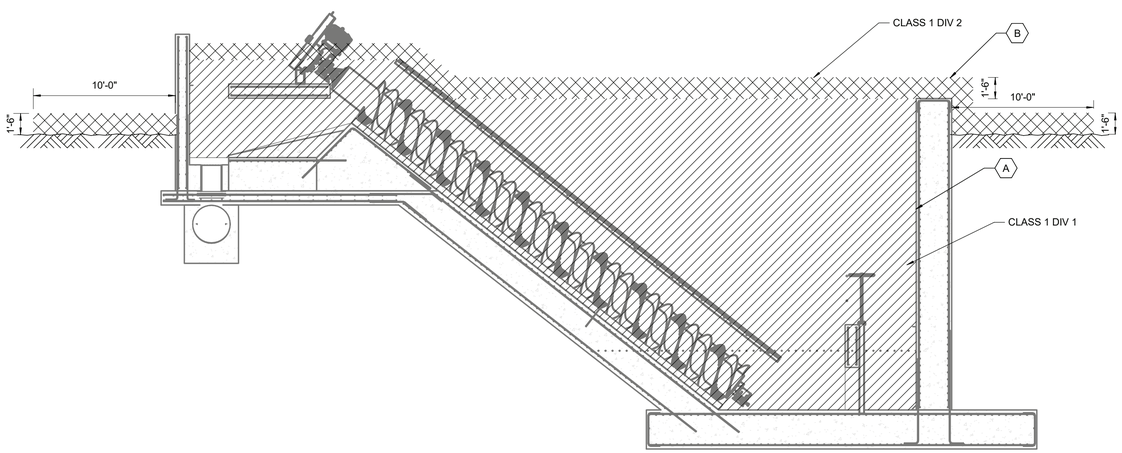

2 CLASSIFICATION SECTION

SCALE: 3/16" = 1'-0"

LEGEND

CLASS 1 DIV 1

CLASS 1 DIV 2

SHEET KEYNOTES

A. ENTIRE INTERIOR OF PUMPING STRUCUTRE IS CLASS 1 DIV 1 AS INDICATED ON PLAN AND SECTIONS.

B. CLASS 1, DIV 2 ENVELOPE EXTENDS 18" ABOVE CLASS 1 DIV 1 AREA AND 10' FROM THE PUMP DECK EDGE AS INDICATED.

Stantec
2890 E Cottonwood Pkwy STE 300
Salt Lake City UT 84121,
Tel: 1.801.617.3300
www.stantec.com

The Contractor shall verify and be responsible for all dimensions. DO NOT scale the drawing - any errors or omissions shall be reported to Stantec without delay. The Copyrights to all designs and drawings are the property of Stantec. Reproduction or use for any purpose other than that authorized by Stantec is forbidden.

Consultant

Revision	By	Appd	YYYY.MM.DD

Issued	By	Appd	YYYY.MM.DD
0 CONSTRUCTION SET	MB	JCR	2024.03.18

Permit/Seal

REGISTERED PROFESSIONAL ENGINEER
#6677342
KEITH E. SMITH
03/19/2024
STATE OF UTAH

Client/Project
MAGNA WATER DISTRICT

MAGNA WATER RECLAMATION FACILITY "INFLUENT DESIGN PROJECT"

Magna, UT

Project No.:181301587

File Name: N/A

Scale: As indicated

PS	KS	DR	2024.03.18
Dwn.	Dsgn.	Chkd.	YYYY.MM.DD

Title
INFLUENT PUMP STATION
CLASSIFICATION PLAN

Revision: Sheet: 139 of 160

Drawing No.
1E-101

3/14/2024 5:17:38 PM

ORIGINAL SHEET - ANSI D

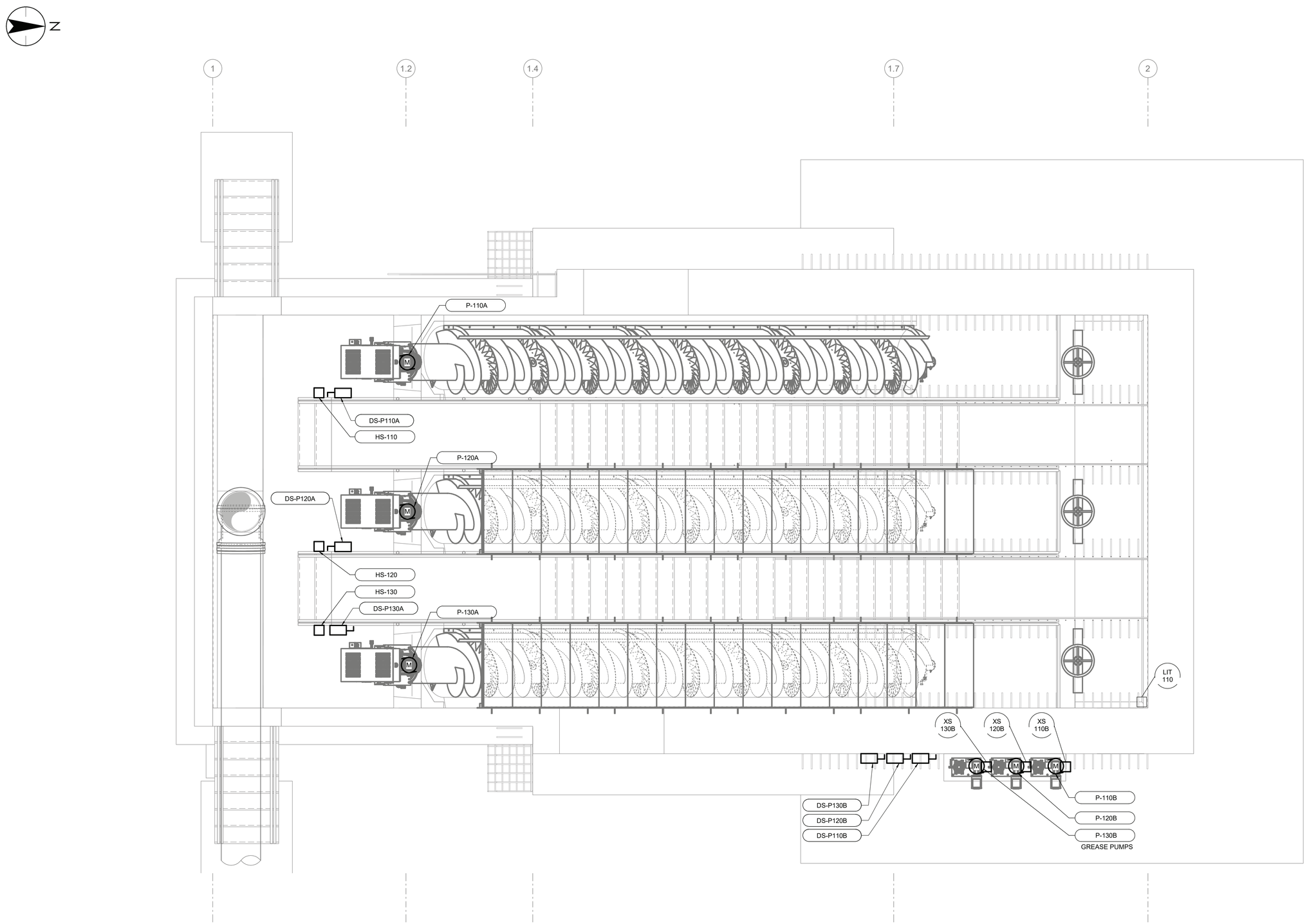

TOP PLAN

SCALE: 3/8" = 1'-0"

Stantec
2890 E Cottonwood Pkwy STE 300
Salt Lake City UT, 84121,
Tel: 1.801.617.3200
www.stantec.com

The Contractor shall verify and be responsible for all dimensions. DO NOT scale the drawing - any errors or omissions shall be reported to Stantec without delay. The Copyrights to all designs and drawings are the property of Stantec. Reproduction or use for any purpose other than authorized by Stantec is forbidden.

Consultant

Revision	By	Appd	YYYY.MM.DD

Issued	By	Appd	YYYY.MM.DD
0 CONSTRUCTION SET	MB	JCR	2024.03.18

Permit/Seal

REGISTERED PROFESSIONAL ENGINEER
#667342
KEITH E. SMITH
03/19/2024
STATE OF UTAH

Client/Project
MAGNA WATER DISTRICT

MAGNA WATER RECLAMATION FACILITY
"INFLUENT DESIGN PROJECT"

Magna, UT

Project No.:181301587

File Name: N/A

Scale: 3/8" = 1'-0"

PS	KS	DR	2024.03.18
Dwn.	Dsgn.	Chkd.	YYYY.MM.DD

Title
INFLUENT PUMP STATION
ELECTRICAL PLAN

Revision: Sheet: 140 of 160

Drawing No.
1E-102

3/14/2024 5:18:20 PM

ORIGINAL SHEET - ANSI D

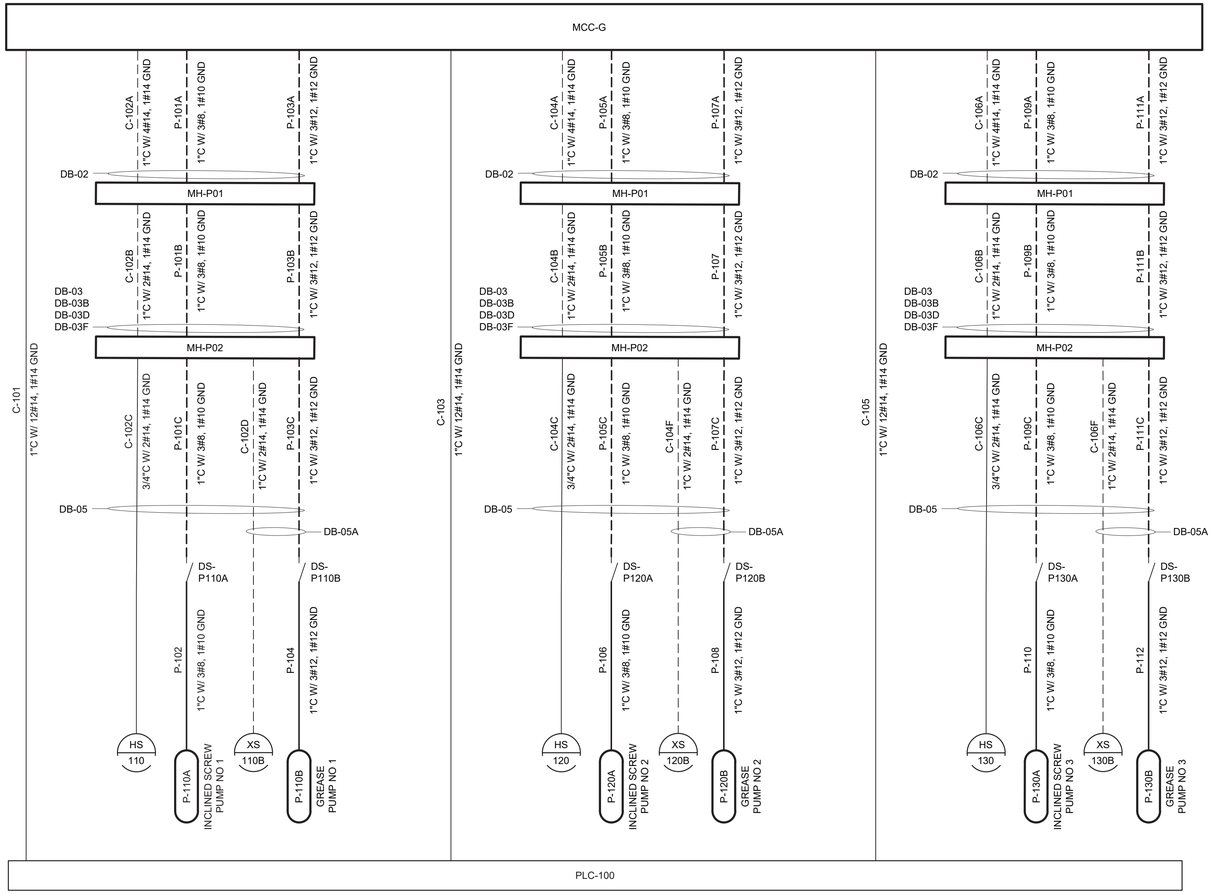

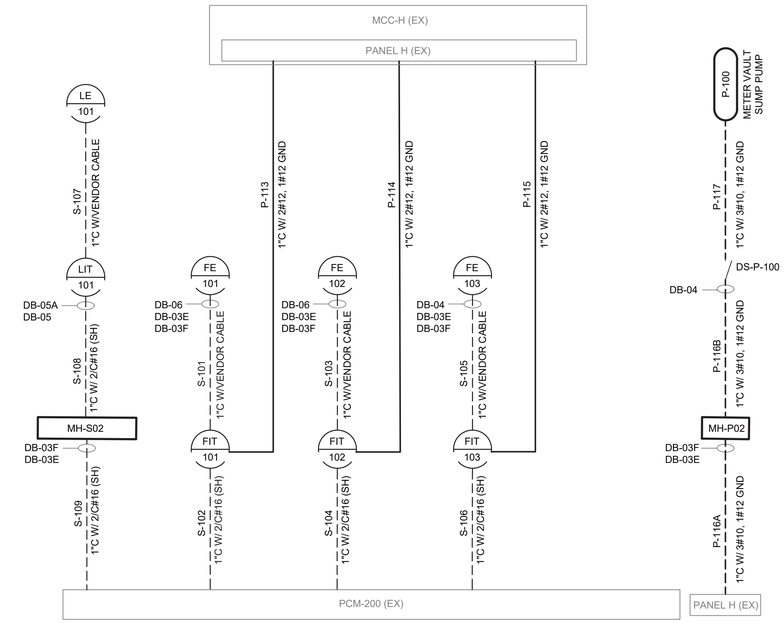

Stantec

Stantec
2890 E Cottonwood Pkwy STE 300
Salt Lake City, UT 84121
Tel: (801) 617-3200
www.stantec.com

The Contractor shall verify and be responsible for all dimensions. DO NOT scale the drawing - use only the dimensions noted/provided. Errors and omissions shall be reported to Stantec without delay. The Copyrights to all designs and drawings are the property of Stantec. Reproduction or use for any purpose other than that authorized by Stantec is forbidden.

Consultant

Revision	By	Appd	YYYY.MM.DD

Issued	By	Appd	YYYY.MM.DD
0 CONSTRUCTION SET	MB	JCR	2024.03.18

Permit/Seal

REGISTERED PROFESSIONAL ENGINEER
#6677342
KEITH E. SMITH
03/19/2024
STATE OF UTAH

Client/Project
MAGNA WATER DISTRICT

MAGNA WATER RECLAMATION FACILITY
"INFLUENT DESIGN PROJECT"
Magna, UT

Project No.: 181301587
File Name: 015870101E601

Scale: NO SCALE

BF	KS	DR	2024.03.18
Dwn.	Dsgn.	Chkd.	YYYY.MM.DD

Title
INFLUENT PUMP STATION
CONDUIT DEVELOPMENT

Revision: Sheet: 141 of 160

Drawing No.
1E-601

c:\users\bfoyd\accdocs\stantec consulting\181301587_magna_influent_design\project files\01_wip\13_electrical\015870101e601
2024.03.18 11:34:54 AM

ORIGINAL SHEET - ANSI D

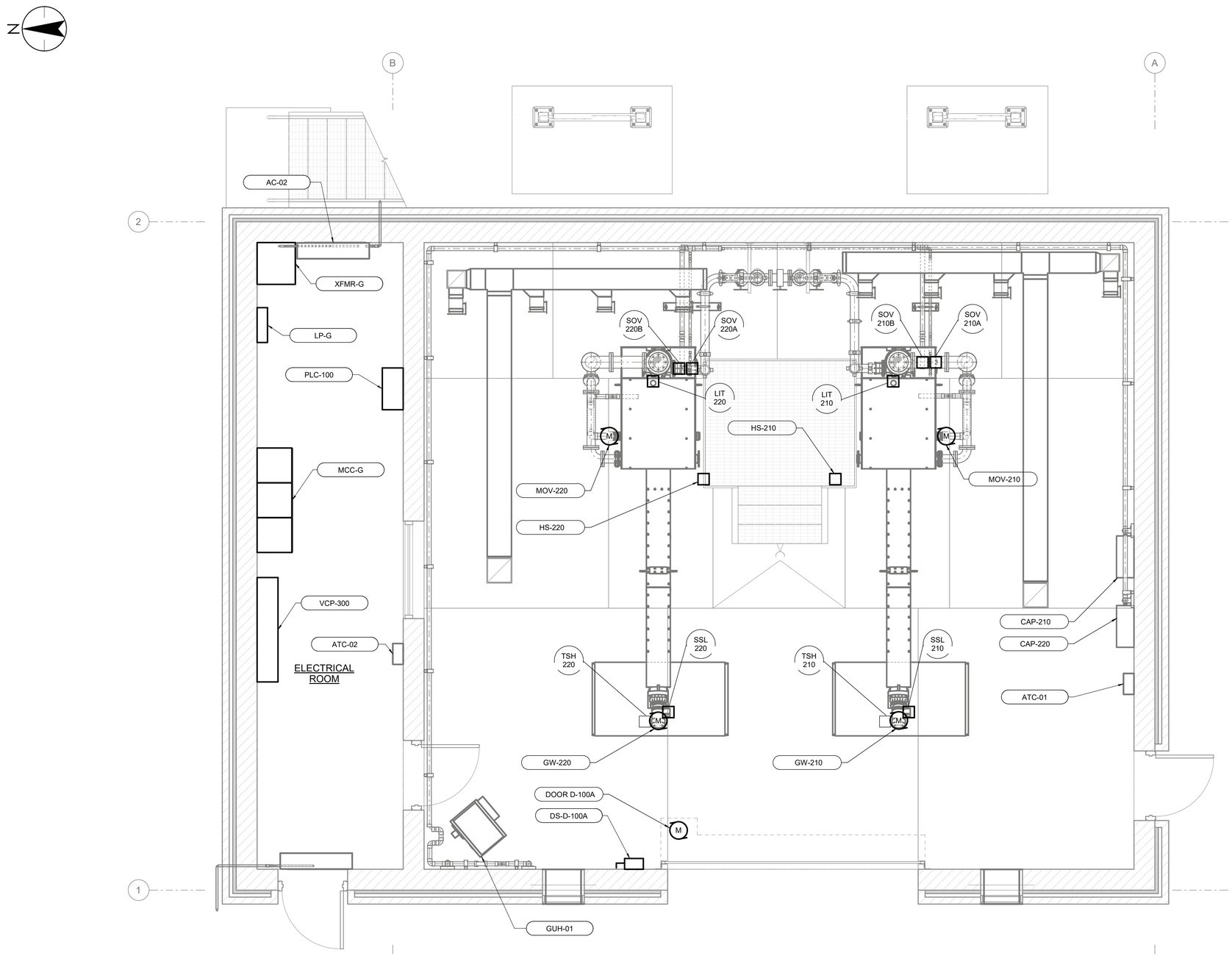

EQUIPMENT LOCATION PLAN

SCALE: 3/8" = 1'-0"

3/18/2024 11:22:28 AM

ORIGINAL SHEET - ANSI D

Stantec
2890 E Cottonwood Pkwy STE 300
Salt Lake City UT 84121,
Tel: 1.801.617.3300
www.stantec.com

The Contractor shall verify and be responsible for all dimensions. DO NOT scale the drawing - any errors or omissions shall be reported to Stantec without delay. The Copyrights to all designs and drawings are the property of Stantec. Reproduction or use for any purpose other than authorized by Stantec is forbidden.

Consultant

Revision	By	Appd	YYYY.MM.DD

Issued	By	Appd	YYYY.MM.DD
0 CONSTRUCTION SET	MB	JCR	2024.03.18

Permit/Seal

REGISTERED PROFESSIONAL ENGINEER #6677342 KEITH E. SMITH 03/19/2024 STATE OF UTAH

Client/Project
MAGNA WATER DISTRICT

MAGNA WATER RECLAMATION FACILITY "INFLUENT DESIGN PROJECT"

Magna, UT

Project No.:181301587

File Name: N/A

Scale: 3/8" = 1'-0"

PS	KS	DR	2024.03.18
Dwn.	Dsgn.	Chkd.	YYYY.MM.DD

Title
GRIT WASHING FACILITY EQUIPMENT LOCATION PLAN

Revision: Sheet: 142 of 160

Drawing No.
2E-101

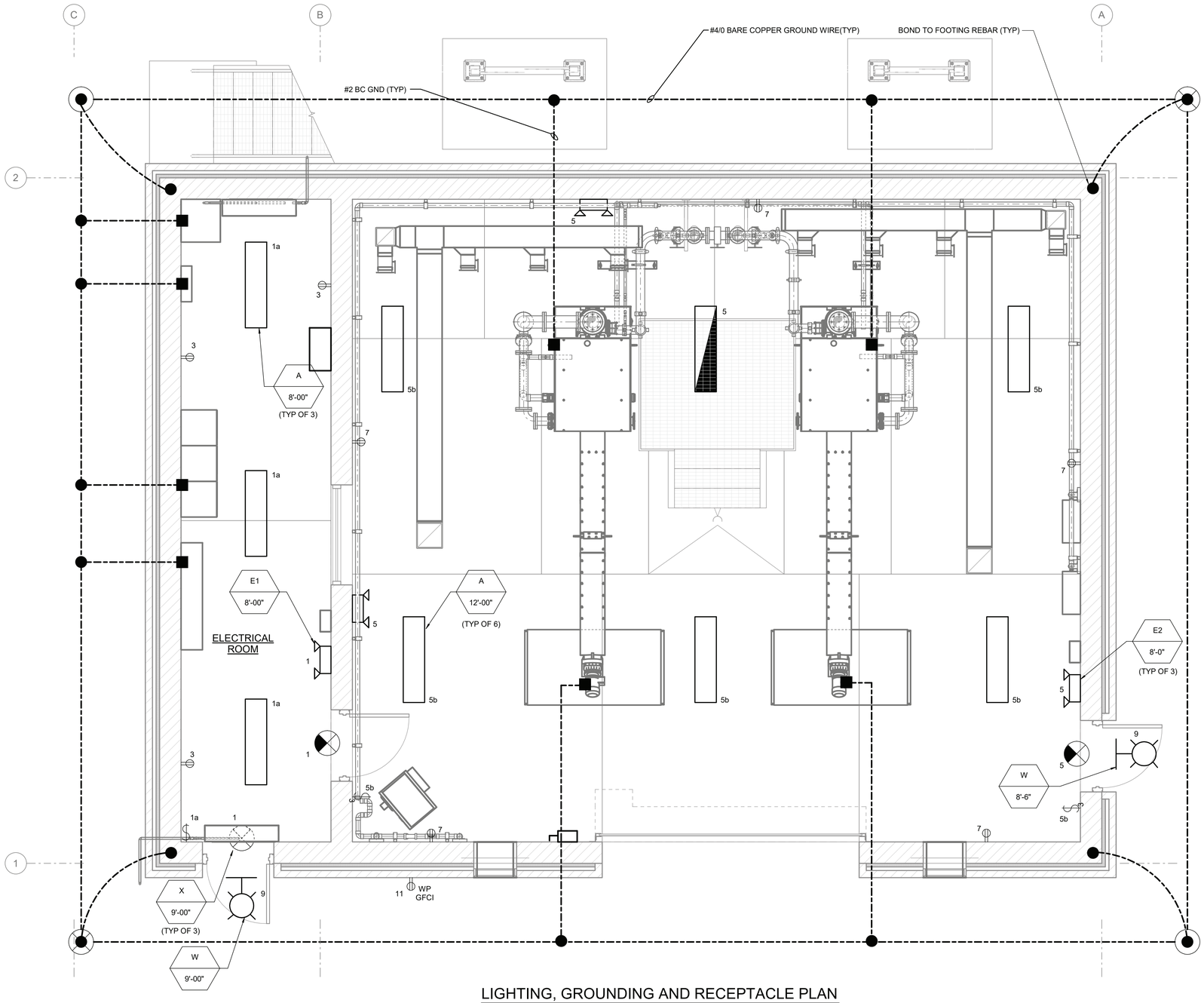

LIGHTING, GROUNDING AND RECEPTACLE PLAN

SCALE: 3/8" = 1'-0"

Stantec
2890 E Cottonwood Pkwy STE 300
Salt Lake City UT 84121,
Tel: 1.801.617.3300
www.stantec.com

The Contractor shall verify and be responsible for all dimensions. DO NOT scale the drawing - any errors or omissions shall be reported to Stantec without delay. The Copyrights to all designs and drawings are the property of Stantec. Reproduction or use for any purpose other than that authorized by Stantec is forbidden.

Consultant

0	CONSTRUCTION SET	MB	JCR	2024.03.18
Issued		By	Appd	YYYY.MM.DD

Revision	By	Appd	YYYY.MM.DD

Permit/Seal

REGISTERED PROFESSIONAL ENGINEER
#6677342
KEITH E. SMITH
03/19/2024
STATE OF UTAH

Client/Project
MAGNA WATER DISTRICT

MAGNA WATER RECLAMATION FACILITY "INFLUENT DESIGN PROJECT"

Magna, UT

Project No.:181301587

File Name: N/A

Scale: 3/8" = 1'-0"

PS	KS	DR	2024.03.18
Dwn.	Dsgn.	Chkd.	YYYY.MM.DD

Title
GRIT WASHING FACILITY LIGHTING, GROUNDING AND RECEPTACLE PLAN

Revision: Sheet: 143 of 160

Drawing No.
2E-102

3/14/2024 5:21:16 PM

ORIGINAL SHEET - ANSI D

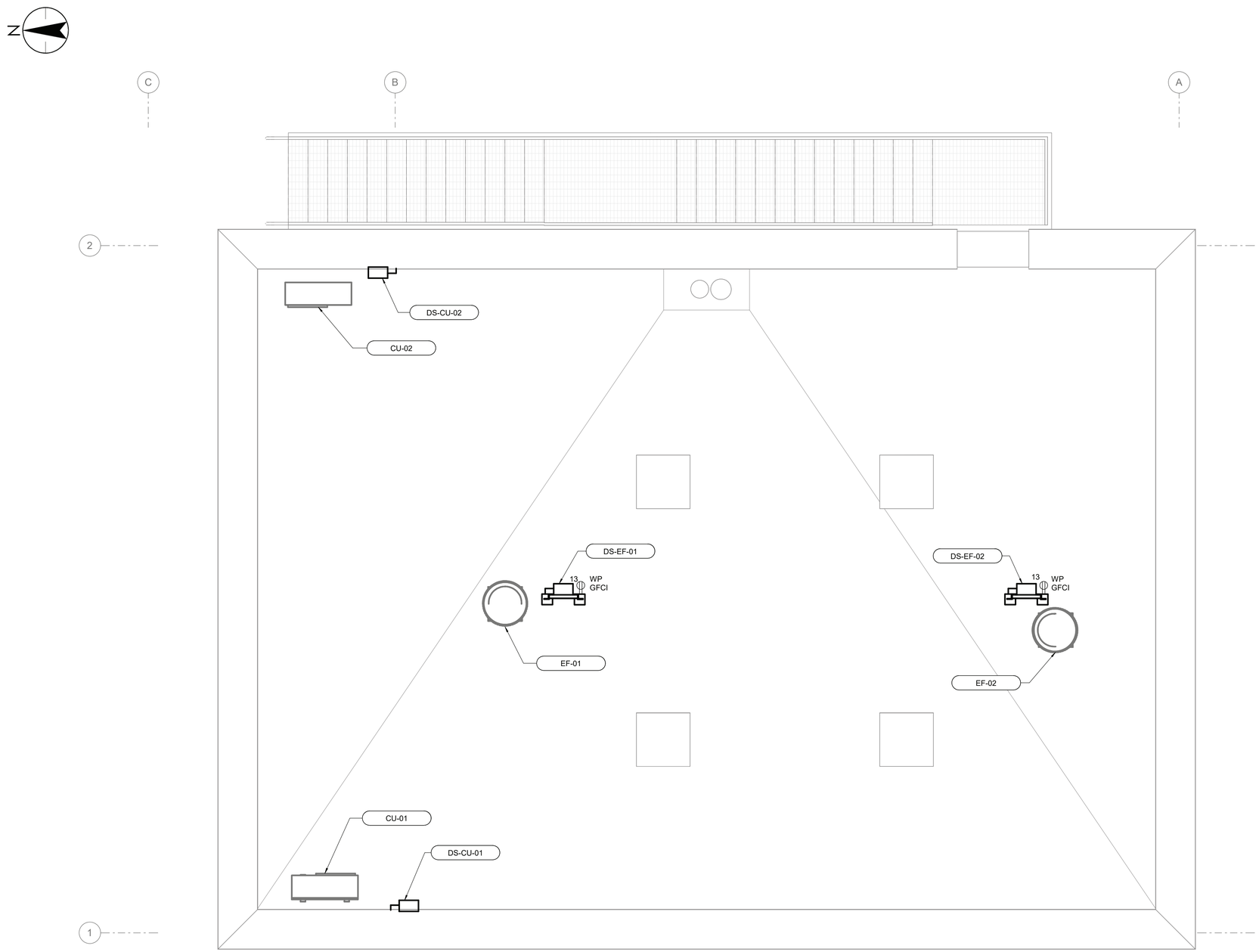

ELECTRICAL ROOF PLAN

SCALE: 3/8" = 1'-0"

Stantec
2890 E Cottonwood Pkwy STE 300
Salt Lake City UT 84121,
Tel: 1.801.617.3200
www.stantec.com

The Contractor shall verify and be responsible for all dimensions. DO NOT scale the drawing - any errors or omissions shall be reported to Stantec without delay. The Copyrights to all designs and drawings are the property of Stantec. Reproduction or use for any purpose other than that authorized by Stantec is forbidden.

Consultant

Revision	By	Appd	YYYY.MM.DD

Issued	By	Appd	YYYY.MM.DD
0 CONSTRUCTION SET	MB	JCR	2024.03.18

Permit/Seal

REGISTERED PROFESSIONAL ENGINEER
#6677342
KEITH E. SMITH
03/19/2024
STATE OF UTAH

Client/Project
MAGNA WATER DISTRICT

MAGNA WATER
RECLAMATION FACILITY
"INFLUENT DESIGN PROJECT"

Magna, UT

Project No.:181301587

File Name: N/A

Scale: 3/8" = 1'-0"

PS	KS	DR	2024.03.18
Dwn.	Dsgn.	Chkd.	YYYY.MM.DD

Title
GRIT WASHING FACILITY
EQUIPMENT LOCATION
PLAN - ROOF

Revision: Sheet: 144 of 160

Drawing No.
2E-103

3/14/2024 5:21:16 PM

ORIGINAL SHEET - ANSI D

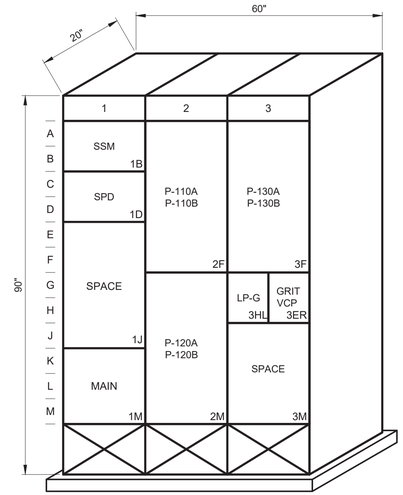

MCC-G ELEVATION

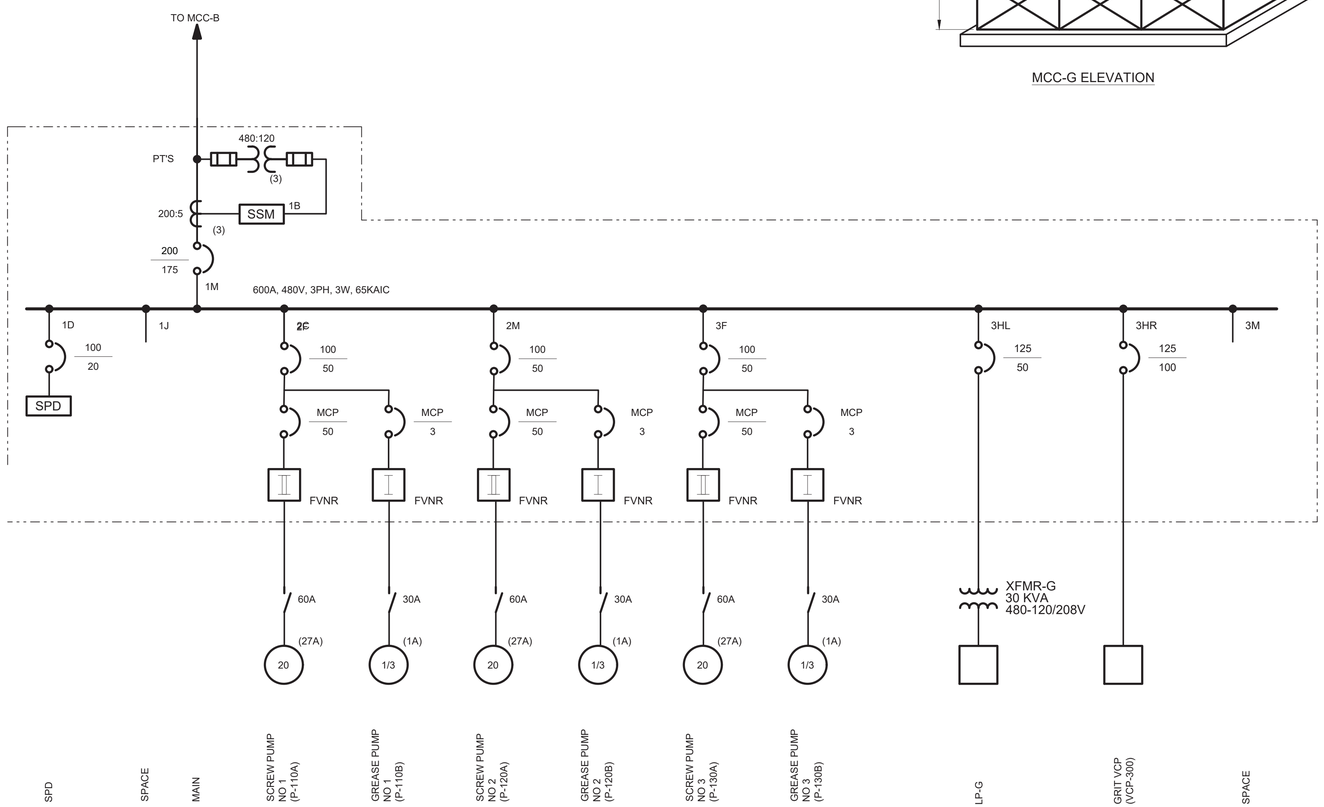

MCC-G

Stantec
2890 E Cottonwood Pkwy STE 300
Salt Lake City, UT 84121
Tel: (801) 617-3200
www.stantec.com

The Contractor shall verify and be responsible for all dimensions. DO NOT scale the drawing - any errors or omissions shall be reported to Stantec without delay. The Copyrights to all designs and drawings are the property of Stantec. Reproduction or use for any purpose other than that authorized by Stantec is forbidden.

Consultant

Revision	By	Appd	YYYY.MM.DD

Issued	By	Appd	YYYY.MM.DD
0 CONSTRUCTION SET	MB	JCR	2024.03.18

Permit/Seal

REGISTERED PROFESSIONAL ENGINEER
#6677342
KEITH E. SMITH
03/19/2024
STATE OF UTAH

Client/Project
MAGNA WATER DISTRICT

MAGNA WATER RECLAMATION FACILITY
"INFLUENT DESIGN PROJECT"
Magna, UT

Project No.: 181301587
File Name: 015870102E601

Scale: NO SCALE

BF	KS	DR	2024.03.18
Dwn.	Dsgn.	Chkd.	YYYY.MM.DD

Title
GRIT WASHING FACILITY
SINGLE LINE DIAGRAM

Revision: Sheet: 145 of 160

Drawing No.
2E-601

c:\users\bfloyd\accdocs\stantec consulting\181301587 magna influent design\project files\01. wip\13. electrical\015870102e601
2024.03.18 11:33:02 AM

ORIGINAL SHEET - ANSI D

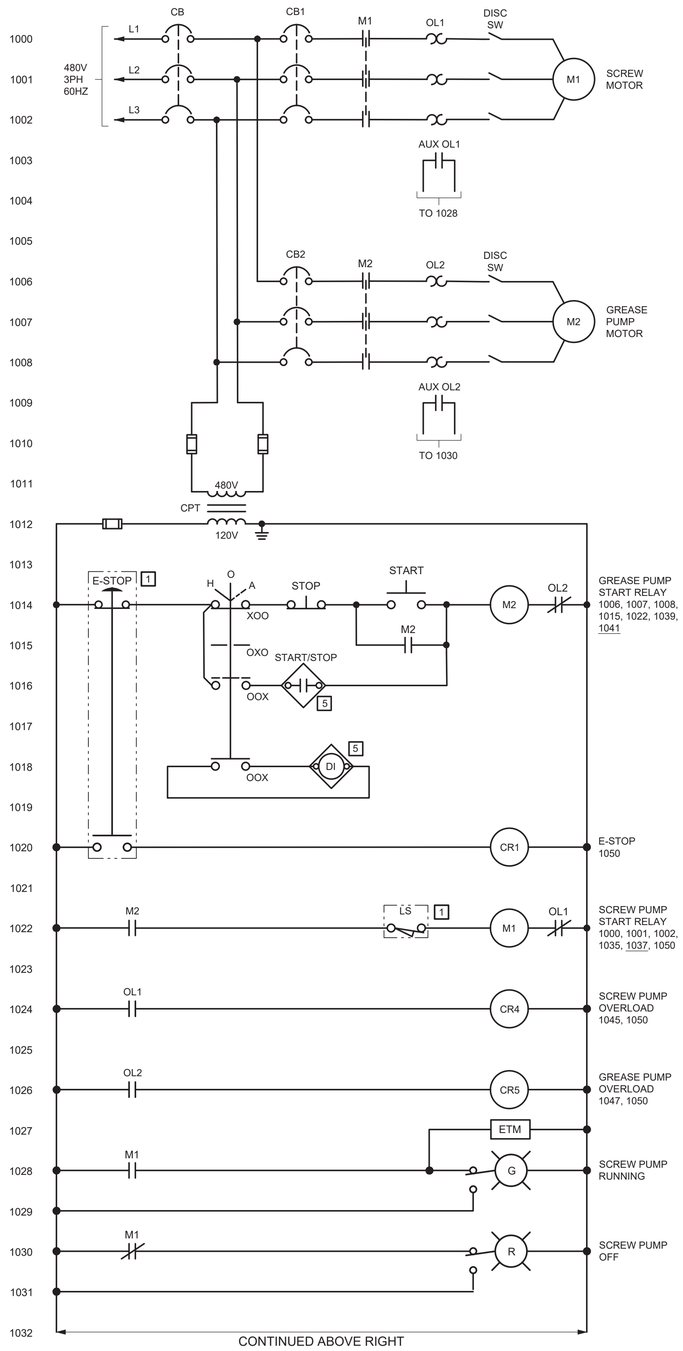

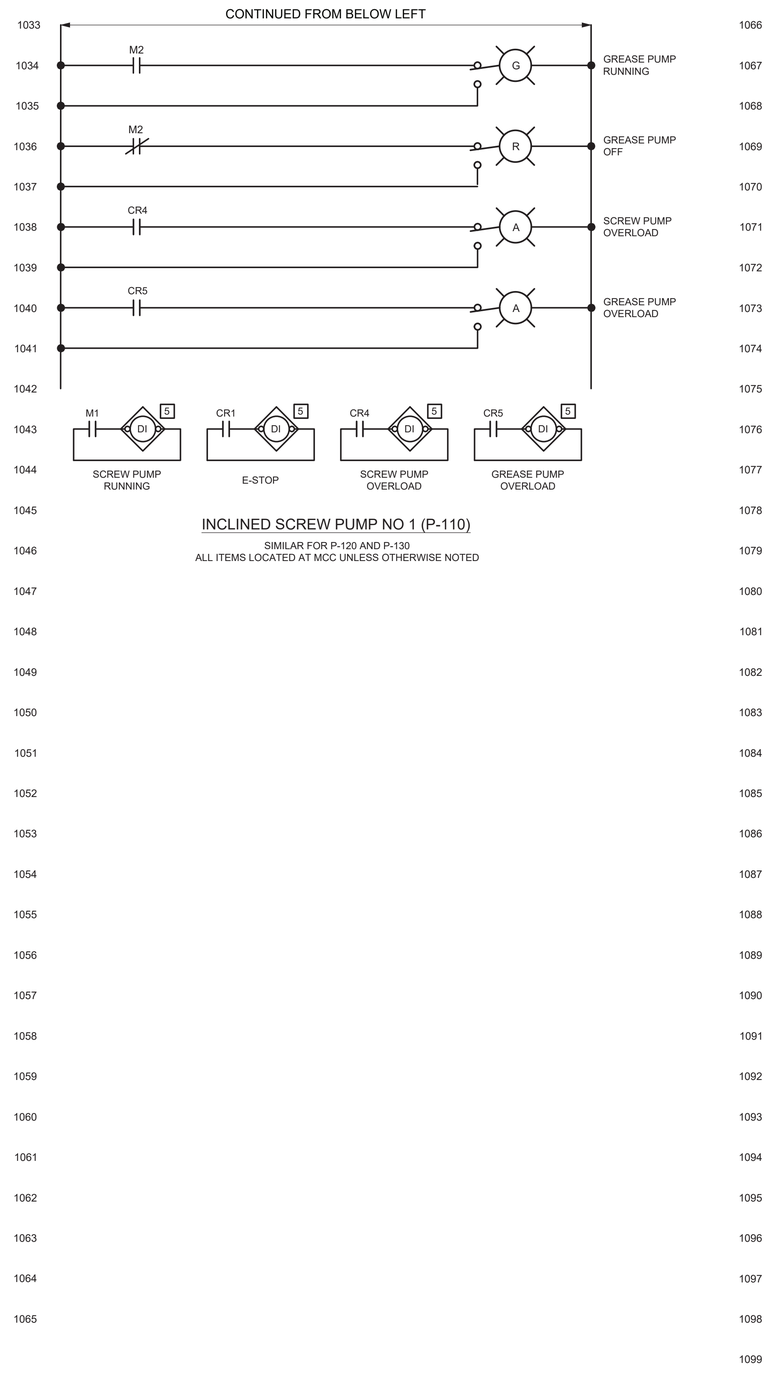

INCLINED SCREW PUMP NO 1 (P-110)

SIMILAR FOR P-120 AND P-130
ALL ITEMS LOCATED AT MCC UNLESS OTHERWISE NOTED

LOCATION LEGEND	
1	FIELD
2	LCS
3	LCP
4	MCC
5	PLC
6	VFD

Stantec
2890 E Cottonwood Pkwy STE 300
Salt Lake City, UT 84121
Tel: (801) 617-3200
www.stantec.com

The Contractor shall verify and be responsible for all dimensions. DO NOT scale the drawing - use only dimensions that are given or calculated. Report any errors, omissions or conflicts to the Engineer-of-Record immediately. The Copyrights to all designs and drawings are the property of Stantec. Reproduction or use for any purpose other than that authorized by Stantec is forbidden.

Consultant

Revision	By	Appd	YYYY.MM.DD

Issued	By	Appd	YYYY.MM.DD
0 CONSTRUCTION SET	MB	JCR	2024.03.18

Permit/Seal

REGISTERED PROFESSIONAL ENGINEER
#6677342
KEITH E. SMITH
03/19/2024
STATE OF UTAH

Client/Project
MAGNA WATER DISTRICT

MAGNA WATER RECLAMATION FACILITY "INFLUENT DESIGN PROJECT"
Magna, UT

Project No.: 181301587
File Name: 01587010 2E602

Scale: NO SCALE

BF	KS	DR	2024.03.18
Dwn.	Dsgn.	Chkd.	YYYY.MM.DD

Title
GRIT WASHING FACILITY
SCHEMATICS - I

Revision: Sheet: 146 of 160

Drawing No.
2E-602

c:\users\kesmith\dc\accdocs\stantec.com\ut\rg\181301587_magna_influent_design\project files\01_wip\13_electrical\01587010\2e602
2024.03.13 11:43:50 AM

ORIGINAL SHEET - ANSI D

208/120 VOLTS
90A MAIN BREAKER

3 PH
4 W
100 A

PANELBOARD: LP-G
LOCATION: GRIT WASHING ELECTRICAL ROOM

FEED: BOTTOM
MOUNTING: SURFACE

LOAD DESCRIPTION	KVA PH A	KVA PH B	KVA PH C	LTG	REC	MIS	CIR	BKR		BKR	CIR	MIS	REC	LTG	KVA PH A	KVA PH B	KVA PH C	LOAD DESCRIPTION
ELECTRICAL RM LTS	0.054			3		_	1	20		20/2P	2	1			0.52			EF-01
ELECTRICAL RM RECPTS		0.54			3	_	3	20			4					0.52		
GRIT RM LTS			0.108	6		_	5	20		20/2P	6	1					0.52	EF-02
GRIT RM RECPTS	0.90				4		7	20			8				0.52			
EXTERIOR LTS		0.078		2			9	20		20/2P	10	1				0.21		GUH-01
EXTERIOR RECPTS			0.18		1		11	20			12						0.21	
ROOF RECPTS	0.36						13	20		20/2P	14	1			0.05			AC-01
ATC-01		0.10					15	20			16					0.05		
ATC-02			0.10				17	20		20/2P	18	1					0.05	AC-02
CAP-210	0.65						19	20			20				0.05			
CAP-220		0.65					21	20		30/2P	22					1.72		CU-01
SPARE			0				23	20			24						1.72	
ROLL UP DOOR D-100A	0						25	20/3P		30/2P	26				1.72			CU-02
		0				1	27				28					1.72		
			0				29			20	30						0.12	PLC-100
SPARE	0						31	20		20	32				0			SPARE
SPARE		0					33	20		20	34					0		SPARE
SPARE			0				35	20		20	36						0	SPARE
SPARE	0						37	20		20	38				0			SPARE
SPARE		0					39	20		20	40					0		SPARE
SPARE			0				41	20		20	42						0	SPARE
	1.314	0.718	.388				TOTAL			TOTAL					2.86	4.22	2.62	
	PHASE LOAD									TOTAL LOAD								
	4.174	4.938	3.008							12.12 KVA								

Stantec
2890 E Cottonwood Pkwy STE 300
Salt Lake City, UT 84121
Tel: (801) 617-3200
www.stantec.com

The Contractor shall verify and be responsible for all dimensions. DO NOT scale the drawing - any errors or omissions shall be reported to Stantec without delay. The Copyrights to all designs and drawings are the property of Stantec. Reproduction or use for any purpose other than that authorized by Stantec is forbidden.

Consultant

Revision	By	Appd	YYYY.MM.DD

Issued	By	Appd	YYYY.MM.DD
0 CONSTRUCTION SET	MB	JCR	2024.03.18

Permit/Seal

REGISTERED PROFESSIONAL ENGINEER
#6677342
KEITH E. SMITH
03/19/2024
STATE OF UTAH

Client/Project
MAGNA WATER DISTRICT

MAGNA WATER
RECLAMATION FACILITY
"INFLUENT DESIGN PROJECT"
Magna, UT

Project No.: 181301587

File Name: 0158710 2E603

Scale: NO SCALE

BF	KS	DR	2024.03.18
Dwn.	Dsgn.	Chkd.	YYYY.MM.DD

Title
GRIT WASHING FACILITY
PANEL SCHEDULE

Revision:

Drawing No.
2E-603

ORIGINAL SHEET - ANSI D

C:\Users\keith.smith.jcr\AppData\Local\Temp\181301587_magna_influent_design\project files\01_wsp\13_electrical\0158710\2e603
2024.03.14 10:18:34 AM

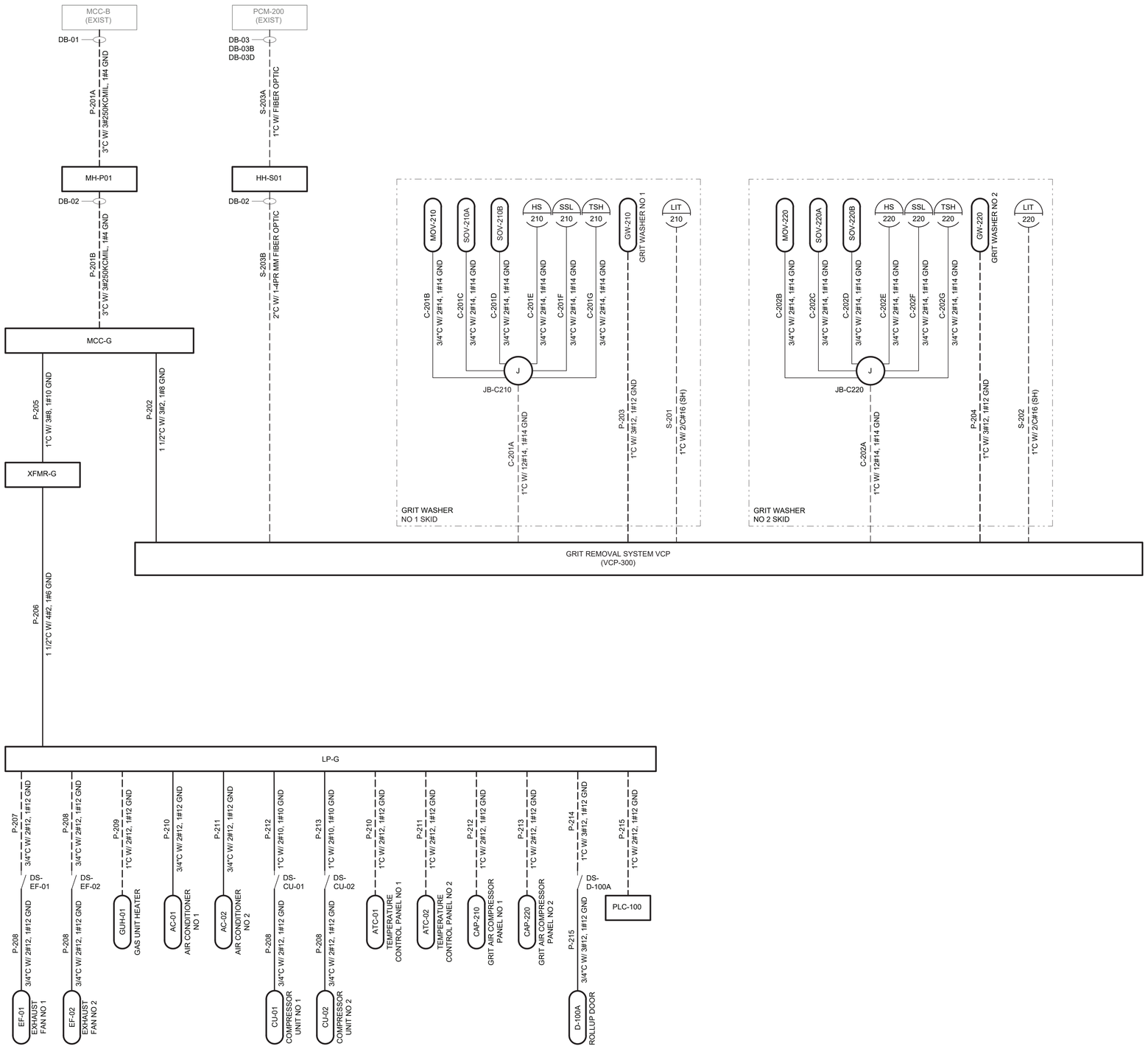

Stantec

Stantec
2890 E Cottonwood Pkwy STE 300
Salt Lake City, UT 84121
Tel: (801) 617-3200
www.stantec.com

The Contractor shall verify and be responsible for all dimensions. DO NOT scale the drawing - any errors or omissions shall be reported to Stantec without delay. The Copyrights to all designs and drawings are the property of Stantec. Reproduction or use for any purpose other than that authorized by Stantec is forbidden.

Consultant

Revision	By	Appd	YYYY.MM.DD

Issued	By	Appd	YYYY.MM.DD
A CONSTRUCTION SET	MB	JCR	2024.03.18

Permit/Seal

REGISTERED PROFESSIONAL ENGINEER #6677342 KEITH E. SMITH 03/19/2024 STATE OF UTAH

Client/Project
MAGNA WATER DISTRICT

MAGNA WATER RECLAMATION FACILITY "INFLUENT DESIGN PROJECT"
Magna, UT

Project No.: 181301587

File Name: 015870102E604

Scale: NO SCALE

BF	KS	DR	2024.03.18
Dwn.	Dsgn.	Chkd.	YYYY.MM.DD

Title
GRIT WASHING FACILITY
CONDUIT DEVELOPMENT

Revision: Sheet: 148 of 160

Drawing No.
2E-604

c:\users\bfloyd\acccdocs\stantec consulting\181301587_magna_influent_design\project files\01_wp\13_electrical\015870102e604
2024.03.18 11:33:09 AM

ORIGINAL SHEET - ANSI D

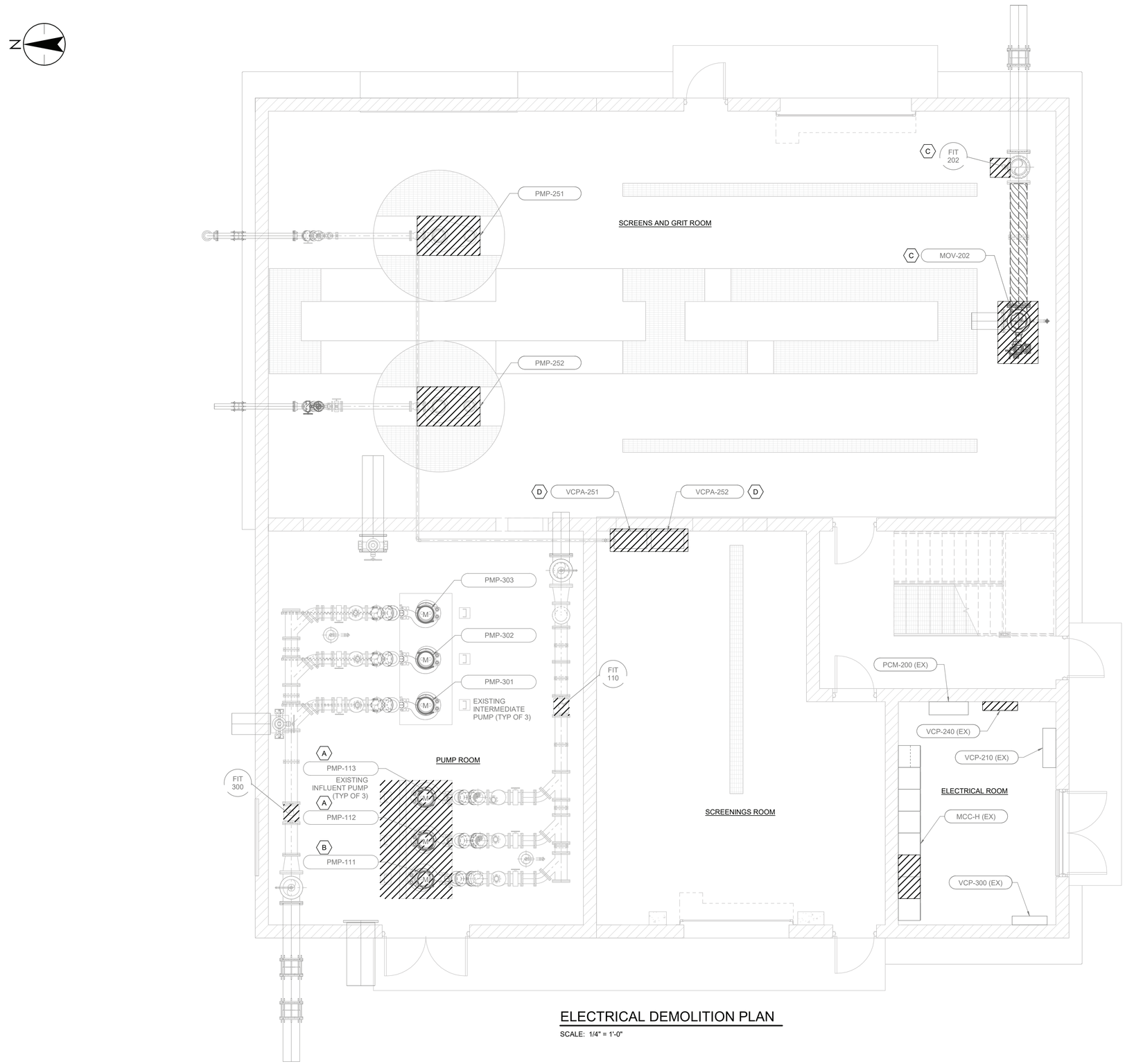

ELECTRICAL DEMOLITION PLAN

SCALE: 1/4" = 1'-0"

SHEET KEYNOTES

A. FOR PUMPS PMP-112 AND PMP-113, DEMO OF CONDUITS AND CABLES BETWEEN LCS AND MCC SHALL BE PER SPECIFICATION 26 00 00. CONTRACTOR MAY CHOOSE TO REUSE EXISTING CONCEALED CONDUITS BY DEMO'ING FLOOR TO EXPOSE EXISTING CONDUITS THEN CONNECTING NEW CONDUITS TO THE EXISTING CONDUTIS AND EXTENDING THOSE TO THE LCS/PUMP. CONTRACTOR SHALL THEN REPAIR FLOOR TO MATCH EXISTING.

B. FOR PUMP PMP-111, DEMO OF CONDUITS AND CABLES BETWEEN LCS AND MCC SHALL BE PER SPECIFICATION 26 00 00.

C. REMOVE WIRE AND CONDUIT ASSOCIATED WITH FLOW METER AND VALVE.

D. REMOVE ALL EXISITING CABLES AND PROTECT EXISTING CONDUITS FOR REUSE WITH NEW EQUIPMENT.

Stantec
2890 E Cottonwood Pkwy STE 300
Salt Lake City UT, 84121,
Tel: 1.801.617.3300
www.stantec.com

The Contractor shall verify and be responsible for all dimensions. DO NOT scale the drawing - any errors or omissions shall be reported to Stantec without delay. The Copyrights to all designs and drawings are the property of Stantec. Reproduction or use for any purpose other than authorized by Stantec is forbidden.

Consultant

Revision	By	Appd	YYYY.MM.DD

ISSUED	By	Appd	YYYY.MM.DD
0 CONSTRUCTION SET	MJB	JCR	2024.03.18

Permit/Seal

REGISTERED PROFESSIONAL ENGINEER
#6677342
KEITH E. SMITH
03/19/2024
STATE OF UTAH

Client/Project
MAGNA WATER DISTRICT

MAGNA WATER RECLAMATION FACILITY "INFLUENT DESIGN PROJECT"

Magna, UT

Project No.:181301587

File Name: N/A

Scale: 1/4" = 1'-0"

PS	KS	DR	2024.03.18
Dwn.	Dsgn.	Chkd.	YYYY.MM.DD

Title
HEADWORKS FACILITY
ELECTRICAL ROOM
DEMOLITION PLAN

Revision: Sheet: 149 of 160

Drawing No.
3ED101

3/14/2024 5:22:28 PM

ORIGINAL SHEET - ANSI D

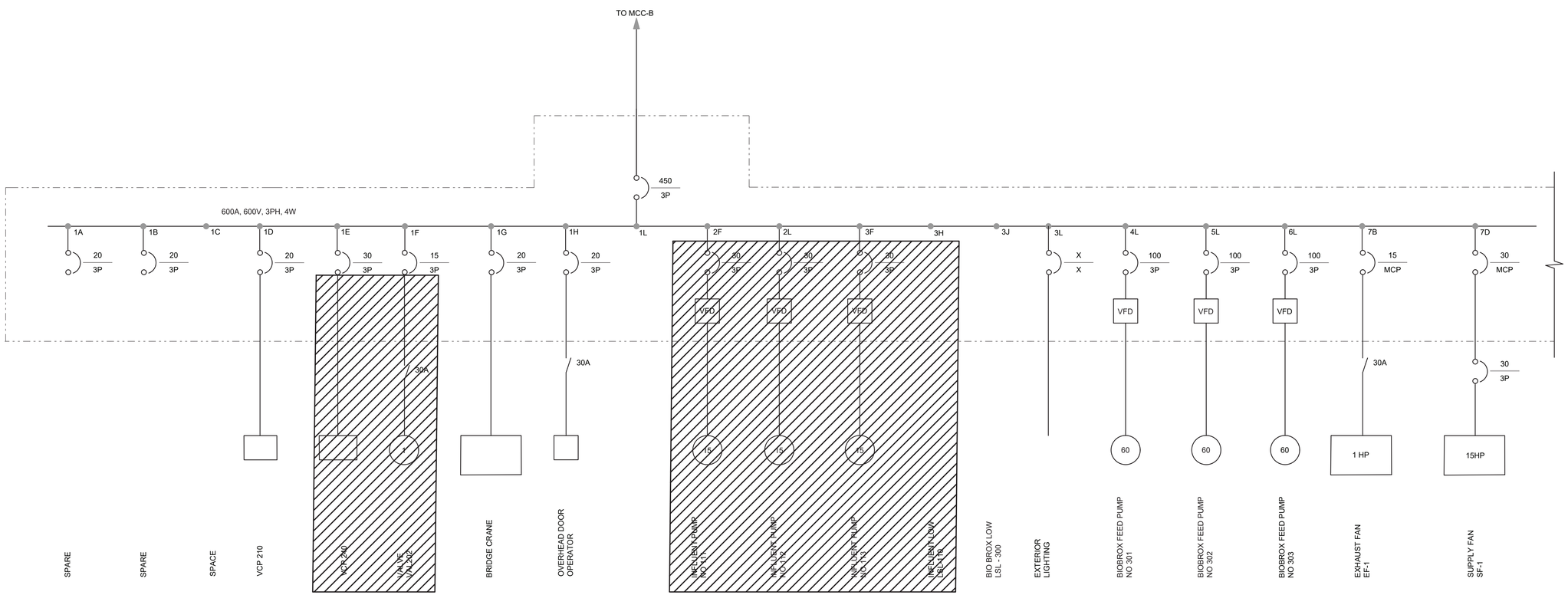

MCC-H SINGLE LINE DIAGRAM

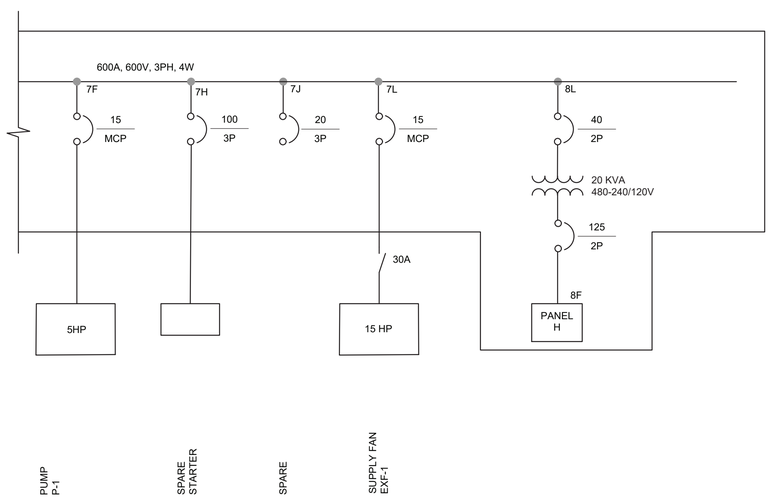

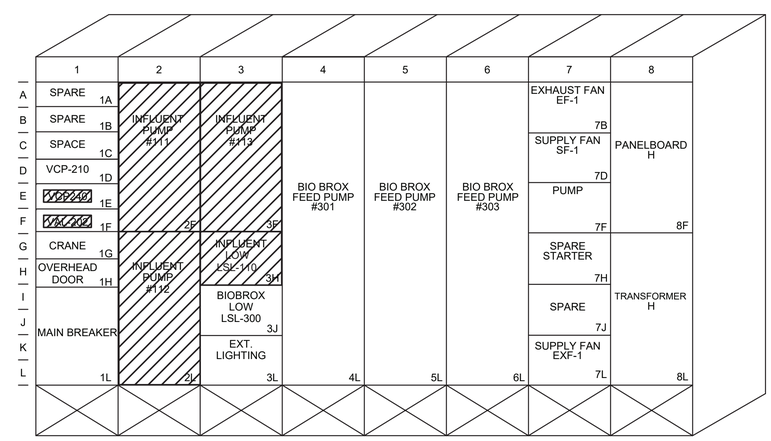

MCC-H ELEVATION

Stantec
2890 E Cottonwood Pkwy STE 300
Salt Lake City, UT 84121
Tel: (801) 617-3200
www.stantec.com

The Contractor shall verify and be responsible for all dimensions. DO NOT scale the drawing - any errors or omissions shall be reported to Stantec without delay. The Copyrights to all designs and drawings are the property of Stantec. Reproduction or use for any purpose other than that authorized by Stantec is forbidden.

Consultant

Revision	By	Appd	YYYY.MM.DD

Issued	By	Appd	YYYY.MM.DD
0 CONSTRUCTION SET	MB	JCR	2024.03.18

Permit/Seal

REGISTERED PROFESSIONAL ENGINEER #6677342 KEITH E. SMITH 03/19/2024 STATE OF UTAH

Client/Project
MAGNA WATER DISTRICT

MAGNA WATER RECLAMATION FACILITY "INFLUENT DESIGN PROJECT"
Magna, UT

Project No.: 181301587
File Name: 015870103ED601
Scale: NO SCALE

BF	KS	DR	2024.03.18
Dwn.	Dsgn.	Chkd.	YYYY.MM.DD

Title
HEADWORKS FACILITY
SINGLE LINE DIAGRAM - DEMOLITION

Revision: Sheet: 150 of 160
Drawing No.
3ED601

ORIGINAL SHEET - ANSI D

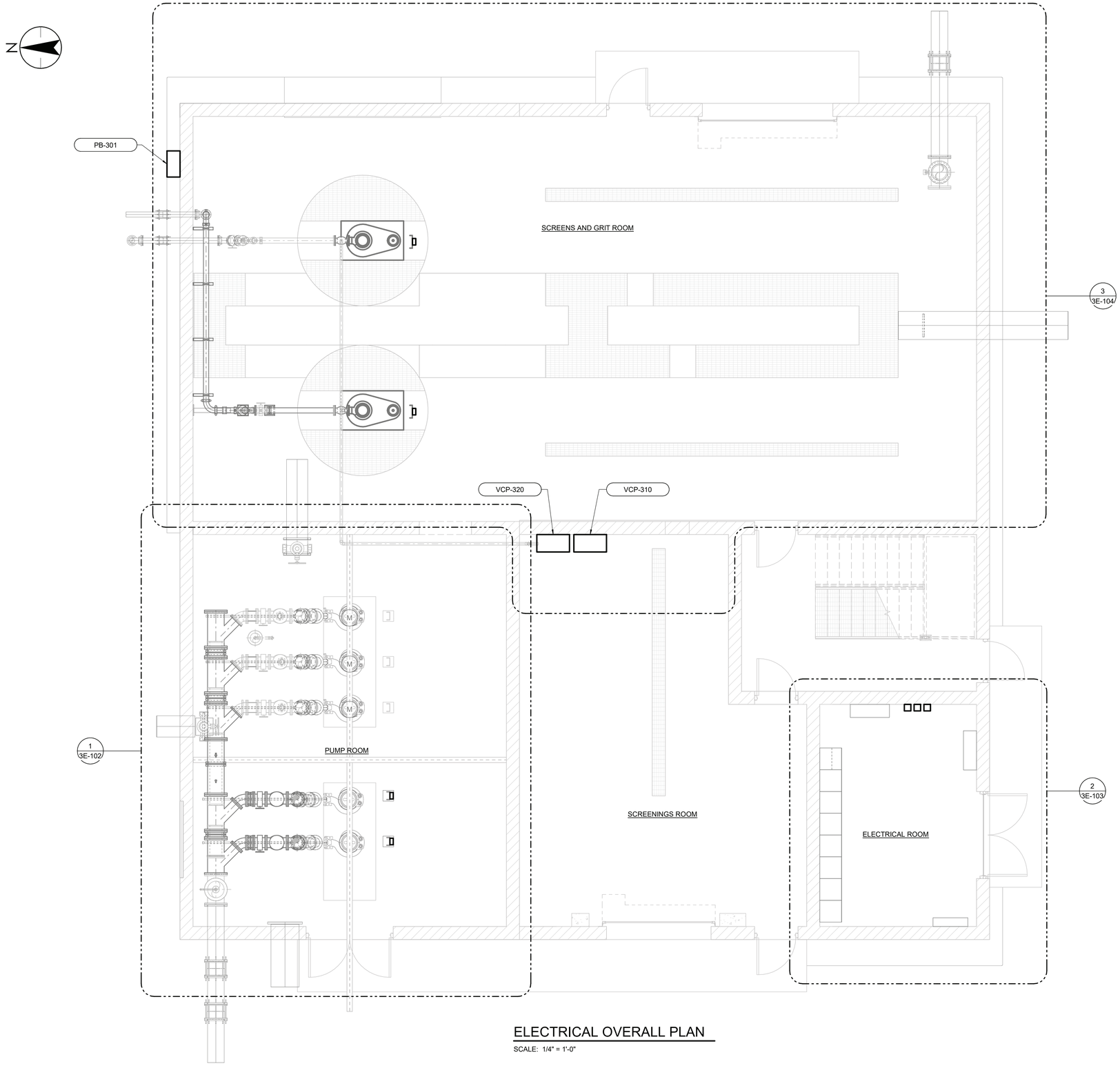

ELECTRICAL OVERALL PLAN

SCALE: 1/4" = 1'-0"

GENERAL SHEET NOTES

1. SCREENS AND GRIT ROOM AND PUMP ROOM ARE CLASSIFIED AS CLASS 1, DIV 2 ENVIRONMENTS. ALL INSTALLATION IN THE CLASSIFIED ROOMS SHALL COMPLY WITH NEC ARTICLE 500.
2. ALL OTHER AREAS ARE UNCLASSIFIED.

Stantec
2890 E Cottonwood Pkwy STE 300
Salt Lake City UT 84121,
Tel: 1.801.617.3200
www.stantec.com

The Contractor shall verify and be responsible for all dimensions. DO NOT scale the drawing - any errors or omissions shall be reported to Stantec without delay. The Copyrights to all designs and drawings are the property of Stantec. Reproduction or use for any purpose other than authorized by Stantec is forbidden.

Consultant

Revision	By	Appd	YYYY.MM.DD

Issued	By	Appd	YYYY.MM.DD
0 CONSTRUCTION SET	MB	JCR	2024.03.18

Permit/Seal

REGISTERED PROFESSIONAL ENGINEER
#6677342
KEITH E. SMITH
03/19/2024
STATE OF UTAH

Client/Project
MAGNA WATER DISTRICT

MAGNA WATER RECLAMATION FACILITY "INFLUENT DESIGN PROJECT"

Magna, UT

Project No.:181301587

File Name: N/A

Scale: 1/4" = 1'-0"

PS	KS	DR	2024.03.18
Dwn.	Dsgn.	Chkd.	YYYY.MM.DD

Title
HEADWORKS FACILITY OVERALL ELECTRICAL PLAN

Revision: Sheet: 151 of 160

Drawing No.
3E-101

3/14/2024 5:22:19 PM

ORIGINAL SHEET - ANSI D

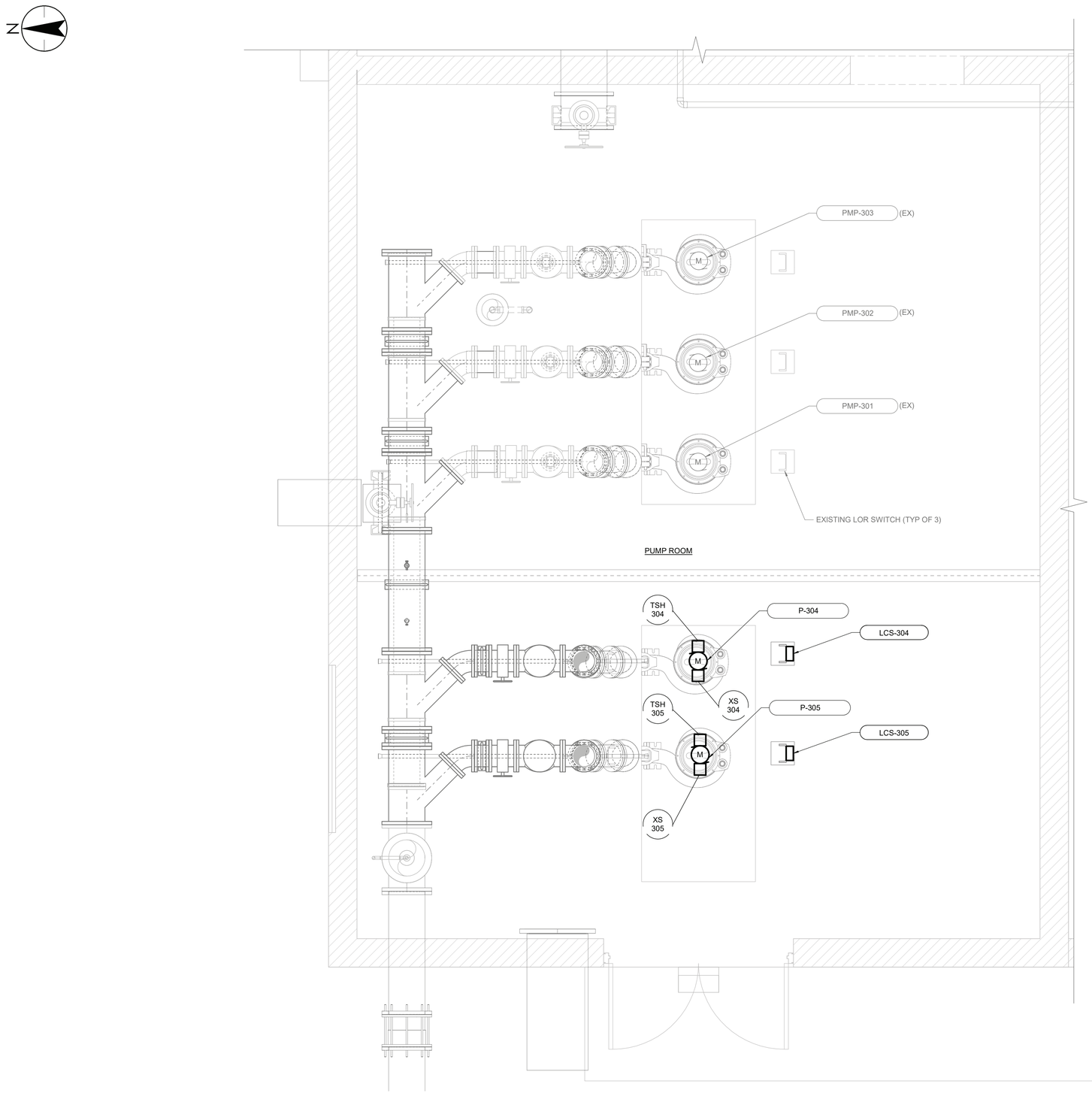

1 / 3E-101 PUMP ROOM ELECTRICAL PLAN

SCALE: 1/2" = 1'-0"

Stantec
2890 E Cottonwood Pkwy STE 300
Salt Lake City UT 84121,
Tel: 1.801.617.3300
www.stantec.com

The Contractor shall verify and be responsible for all dimensions. DO NOT scale the drawing - any errors or omissions shall be reported to Stantec without delay. The Copyrights to all designs and drawings are the property of Stantec. Reproduction or use for any purpose other than authorized by Stantec is forbidden.

Consultant

0	CONSTRUCTION SET	MB	JCR	2024.03.18
Revision	By	Appd	YYYY.MM.DD

Issued

Permit/Seal

REGISTERED PROFESSIONAL ENGINEER #6677342 KEITH E. SMITH 03/19/2024 STATE OF UTAH

Client/Project
MAGNA WATER DISTRICT

MAGNA WATER RECLAMATION FACILITY "INFLUENT DESIGN PROJECT"

Magna, UT

Project No.:181301587

File Name: N/A

Scale: 1/2" = 1'-0"

PS	KS	DR	2024.03.18
Dwn.	Dsgn.	Chkd.	YYYY.MM.DD

Title
HEADWORKS FACILITY
PUMP ROOM
ELECTRICAL PLAN

Revision: Sheet: 152 of 160

Drawing No.
3E-102

3/14/2024 5:22:23 PM

ORIGINAL SHEET - ANSI D

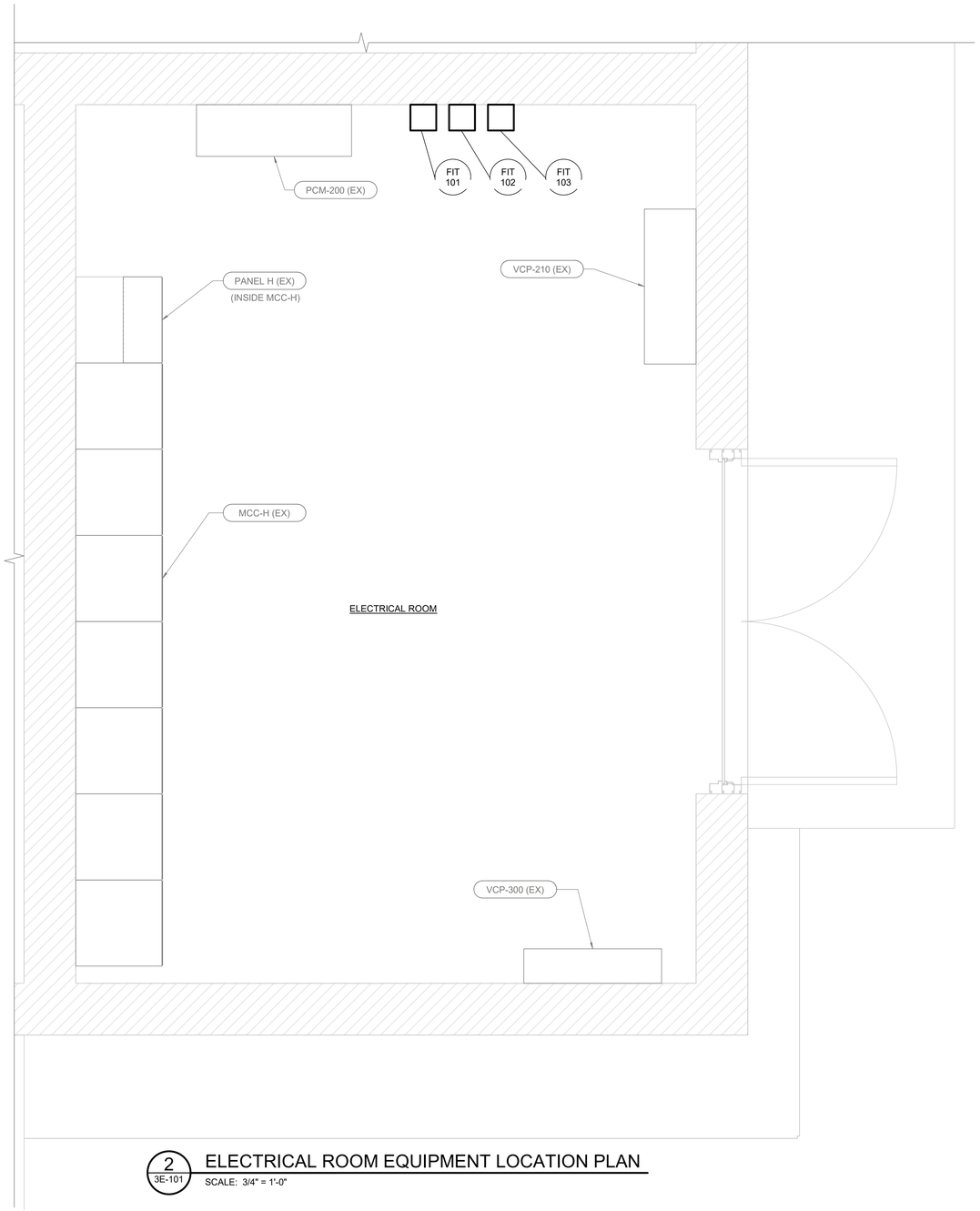

2 3E-101 ELECTRICAL ROOM EQUIPMENT LOCATION PLAN

SCALE: 3/4" = 1'-0"

Stantec

Stantec
2890 E Cottonwood Pkwy STE 300
Salt Lake City UT, 84121,
Tel: 1.801.617.3200
www.stantec.com

The Contractor shall verify and be responsible for all dimensions. DO NOT scale the drawing - any errors or omissions shall be reported to Stantec without delay. The Copyrights to all designs and drawings are the property of Stantec. Reproduction or use for any purpose other than that authorized by Stantec is forbidden.

Consultant

Revision	By	Appd	YYYY.MM.DD

Issued	By	Appd	YYYY.MM.DD
0 CONSTRUCTION SET	MB	JCR	2024.03.18

Permit/Seal

REGISTERED PROFESSIONAL ENGINEER #6677342 KEITH E. SMITH 03/19/2024 STATE OF UTAH

Client/Project
MAGNA WATER DISTRICT

MAGNA WATER RECLAMATION FACILITY "INFLUENT DESIGN PROJECT"

Magna, UT

Project No.:181301587

File Name: N/A

Scale: 3/4" = 1'-0"

PS	KS	DR	2024.03.18
Dwn.	Dsgn.	Chkd.	YYYY.MM.DD

Title
HEADWORKS FACILITY
ELECTRICAL ROOM
EQUIP LOCATION PLAN

Revision: Sheet: 153 of 160

Drawing No.
3E-103

3/14/2024 5:22:23 PM

ORIGINAL SHEET - ANSI D

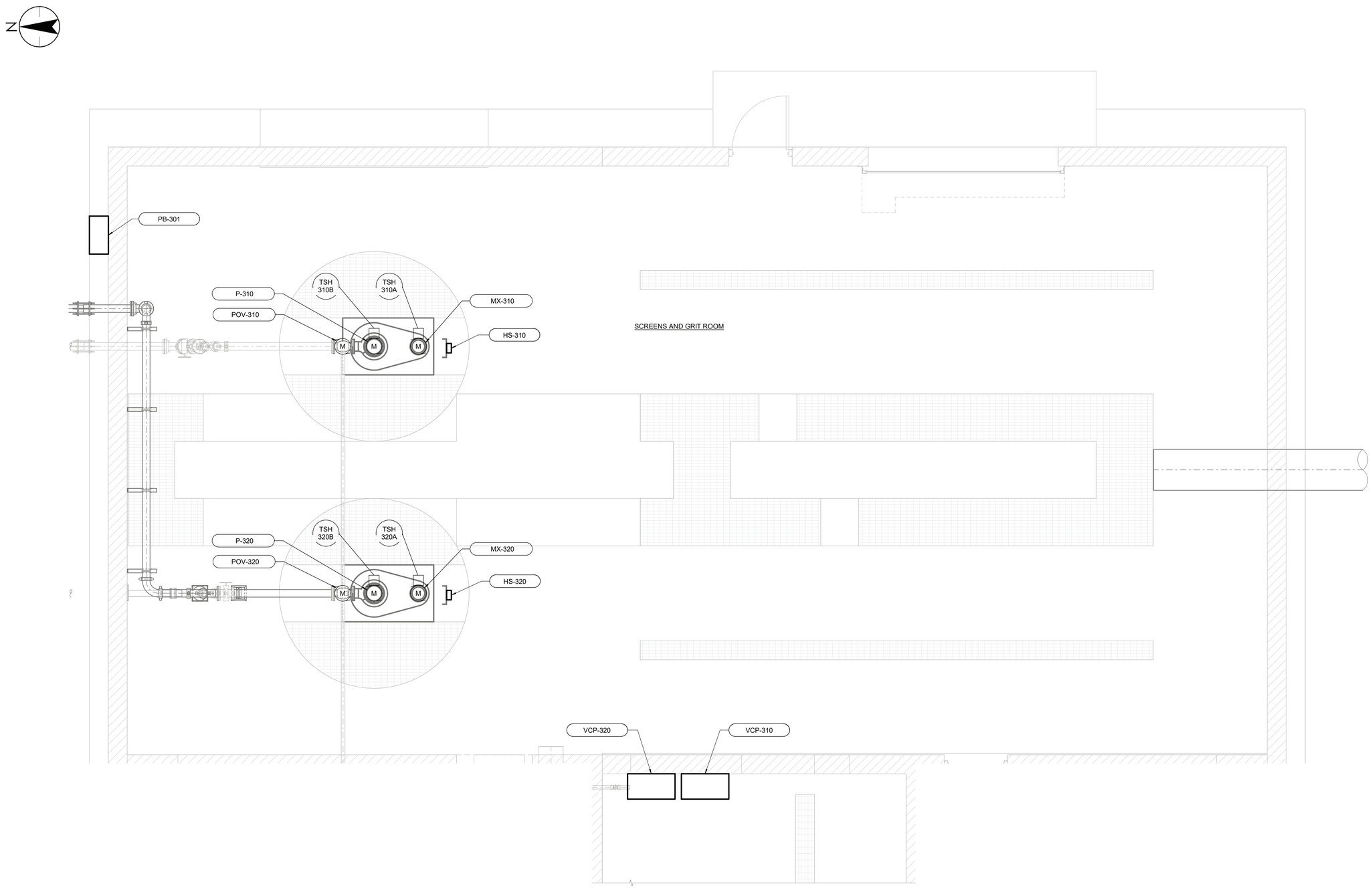

3 / 3E-101 SCREENS AND GRIT ELECTRICAL PLAN

SCALE: 3/8" = 1'-0"

Stantec
2890 E Cottonwood Pkwy STE 300
Salt Lake City UT, 84121,
Tel: 1.801.617.3300
www.stantec.com

The Contractor shall verify and be responsible for all dimensions. DO NOT scale the drawing - any errors or omissions shall be reported to Stantec without delay. The Copyrights to all designs and drawings are the property of Stantec. Reproduction or use for any purpose other than authorized by Stantec is forbidden.

Consultant

Revision	By	Appd	YYYY.MM.DD

Issued	By	Appd	YYYY.MM.DD
0 CONSTRUCTION SET	MJB	JCR	2024.03.18

Permit/Seal

REGISTERED PROFESSIONAL ENGINEER #6677342 KEITH E. SMITH 03/19/2024 STATE OF UTAH

Client/Project
MAGNA WATER DISTRICT

MAGNA WATER RECLAMATION FACILITY "INFLUENT DESIGN PROJECT"

Magna, UT

Project No.:181301587

File Name: N/A

Scale: 3/8" = 1'-0"

PS	KS	DR	2024.03.18
Dwn.	Dsgn.	Chkd.	YYYY.MM.DD

Title
HEADWORKS FACILITY
SCREENS & GRIT ROOM
ELECTRICAL PLAN

Revision: Sheet: 154 of 160

Drawing No.
3E-104

3/14/2024 5:22:25 PM

ORIGINAL SHEET - ANSI D

SHEET KEYNOTES

A. EXISTING MCC MANUFACTURED BY QES, NEW WORK TO BE DONE BY OR APPROVED BY THE MANUFACTURER. IF THE WORK IS NOT DONE BY QES, IT MUST BE DONE BY SOMEONE WHO CAN MAINTAIN OR UPDATE THE UL LISTING OF THE MCC.

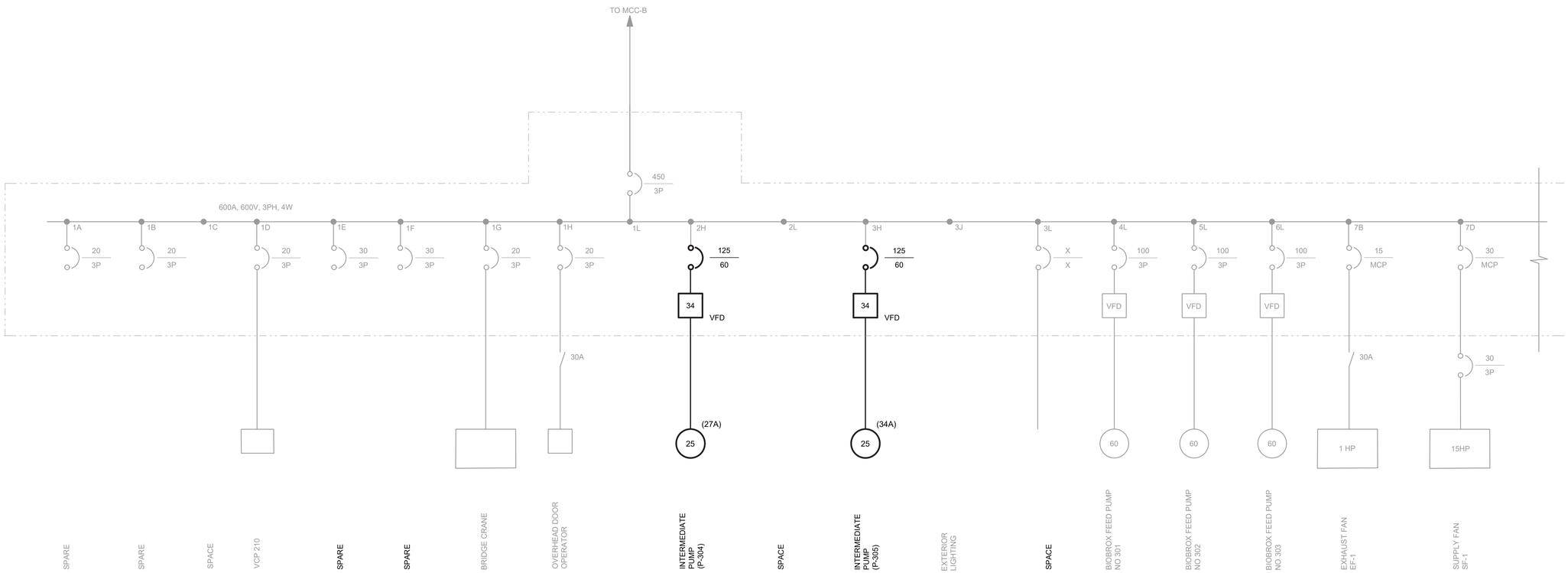

MCC-H SINGLE LINE DIAGRAM (A)

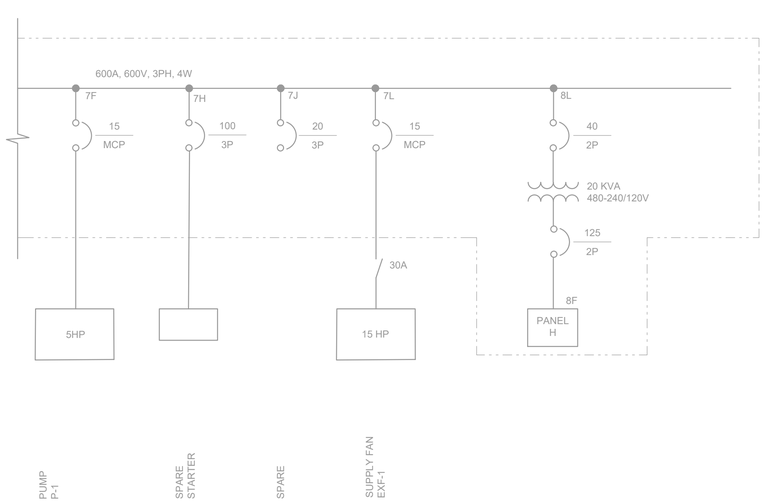

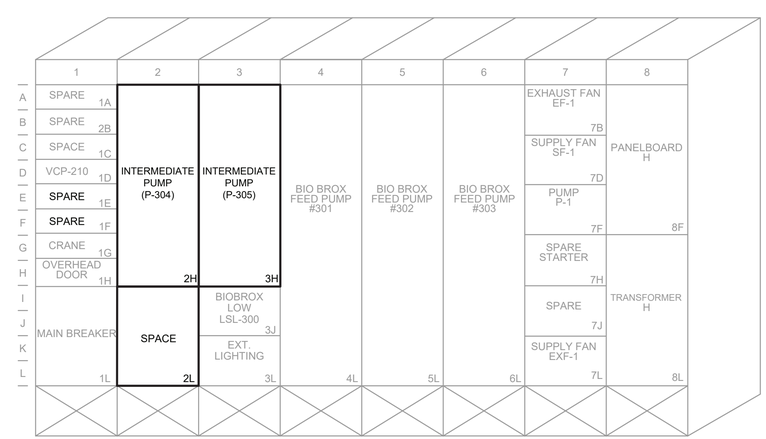

MCC-H ELEVATION (A)

Stantec
2890 E Cottonwood Pkwy STE 300
Salt Lake City, UT 84121
Tel: (801) 617-3200
www.stantec.com

The Contractor shall verify and be responsible for all dimensions. DO NOT scale the drawing - any errors or omissions shall be reported to Stantec without delay. The Copyrights to all designs and drawings are the property of Stantec. Reproduction or use for any purpose other than that authorized by Stantec is forbidden.

Consultant

Revision	By	Appd	YYYY.MM.DD

ISSUED	By	Appd	YYYY.MM.DD
0 CONSTRUCTION SET	MB	JCR	2024.03.18

Permit/Seal

REGISTERED PROFESSIONAL ENGINEER #6677342 KEITH E. SMITH 03/19/2024 STATE OF UTAH

Client/Project
MAGNA WATER DISTRICT

MAGNA WATER RECLAMATION FACILITY "INFLUENT DESIGN PROJECT"

Magna, UT

Project No.: 181301587

File Name: 0158701 03E601

Scale: NO SCALE

BF	KS	DR	2024.03.18
Dwn.	Dsgn.	Chkd.	YYYY.MM.DD

Title
HEADWORKS FACILITY
SINGLE LINE DIAGRAM

Revision: Sheet: 155 of 160

Drawing No.
3E-601

ORIGINAL SHEET - ANSI D

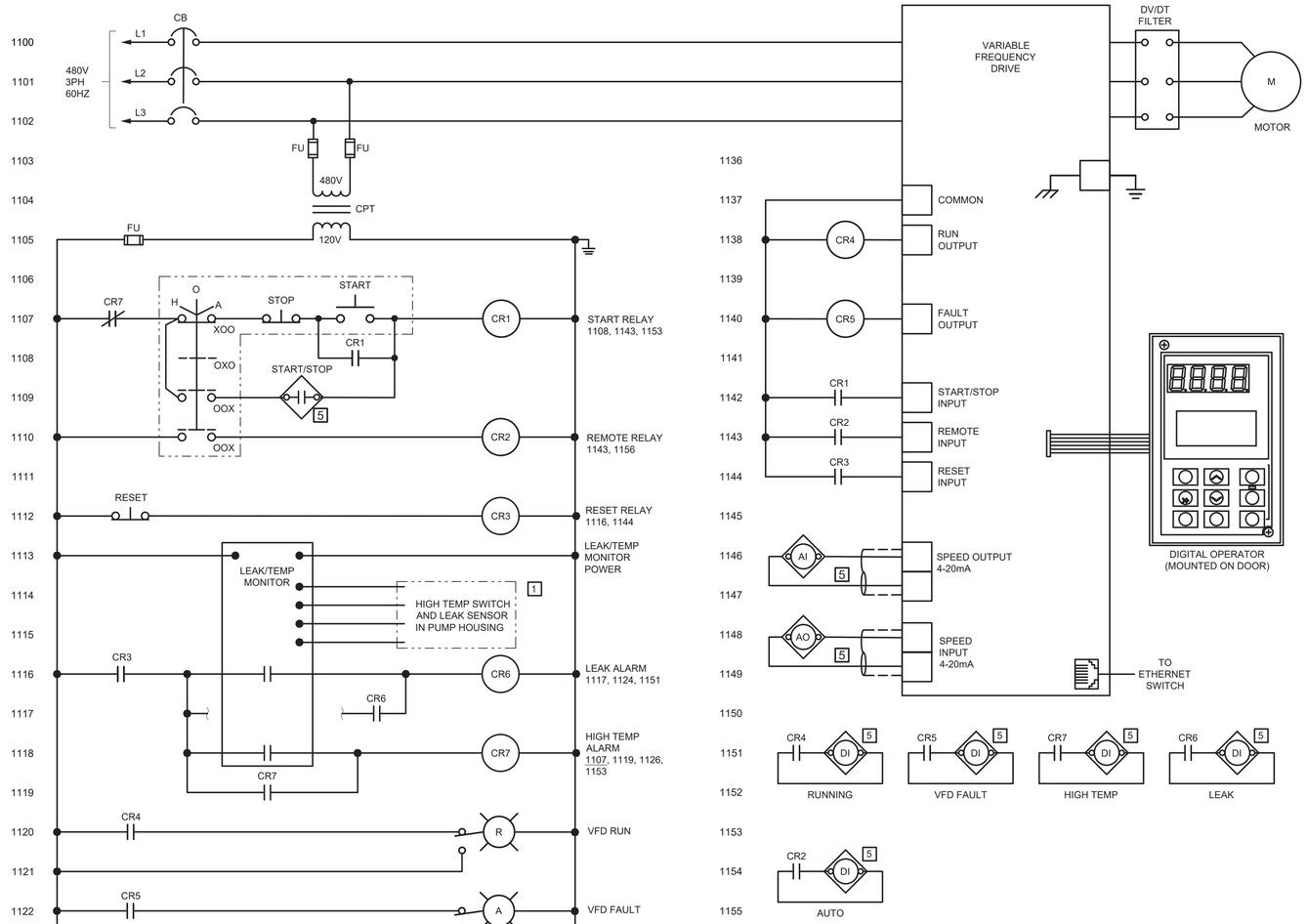

INTERMEDIATE PUMP (P-304)

SIMILAR FOR P-305
(ALL ITEMS LOCATED AT VFD UNLESS OTHERWISE NOTED)

LOCATION LEGEND	
1	FIELD
2	LCS
3	LCP
4	MCC
5	PLC
6	VFD

Stantec
2890 E Cottonwood Pkwy STE 300
Salt Lake City, UT 84121
Tel: (801) 617-3200
www.stantec.com

The Contractor shall verify and be responsible for all dimensions. DO NOT scale the drawing - any errors or omissions shall be reported to Stantec without delay. The Copyrights to all designs and drawings are the property of Stantec. Reproduction or use for any purpose other than that authorized by Stantec is forbidden.

Consultant

Issued				Revision	By	Appd	YYYY.MM.DD
0	CONSTRUCTION SET	MB	JCR	2024.03.18			

Permit/Seal

REGISTERED PROFESSIONAL ENGINEER
#6677342
KEITH E. SMITH
03/19/2024
STATE OF UTAH

Client/Project
MAGNA WATER DISTRICT

MAGNA WATER
RECLAMATION FACILITY
"INFLUENT DESIGN PROJECT"
Magna, UT

Project No.: 181301587

File Name: 01587010 3E602

Scale: NO SCALE

BF	KS	DR	2024.03.18
Dwn.	Dsgn.	Chkd.	YYYY.MM.DD

Title
HEADWORKS FACILITY
SCHEMATICS

Revision: Sheet: 156 of 160

Drawing No.
3E-602

ORIGINAL SHEET - ANSI D

240/120 VOLTS
MLO MAIN BREAKER

1 PH
3 W
125 A

PANELBOARD: H
LOCATION: MCC-H

FEED: -
MOUNTING: IN MCC-H

LOAD DESCRIPTION	KVA PH A	KVA PH B	CIR	BKR		BKR	CIR	KVA PH A	KVA PH B	LOAD DESCRIPTION
INFL WT WELL LOW LVL RELAY	0.050		1	20		20	2	0.982		INFL PUMP RM LTG
SCREEN & GRIT RM LTG WEST		0.982	3	20		20	4		0.747	SCREENING RM LTG
SCREEN & GRIT RM LTG EAST	0.982		5	20		20	6	0.324		ELECTRICAL RM & STAIRWELL LTG
HVAC RM LTG		1.043	7	20		20	8		0.340	OUTDOOR LTG
	0.9		9	20		20	10	1.080		HVAC RM & ELECT RM RECEPTS
CONTROL PANEL VCP-210		0.6	11	20		20	12		0.2	CONTROL PANEL VCP-310
	0.6		13	20		20	14	0.2		UNIT HEATER UH-1, AH-1, AH-2 & CFS-1
CONTROL PANEL PCM-200		0.9	15	20		20	16		0.575	HVAC CONTROLS
SPARE	0.0		17	20		20	18	0.3		FIT-110
SPARE		0.0	19	20		20	20		0.3	FIT-120
SPARE	0.0		21	20		20	22	0.3		FIT-130
SPARE		0.0	23	20		20	24		0.72	VCP-310
SPARE	0.0		25	20		20	26	0.72		VCP-320
SPARE		0.0	27	20		20	28		1.92	P-100
SPARE	0.0		29	20		20	30	0.0		SPARE
SPARE		0.0	31	20		20	32		0.0	SPARE
SPARE	0.0		33	20		20	34	0.0		SPARE
SPARE		0.0	35	20		20	36		0.0	SPARE
SPARE	0.0		37	20		20	38	0.0		SPARE
SPARE		0.0	39	20		20	40		0.0	SPARE
SPARE	0.0		41	20		20	42	0.0		SPARE
	2.532	3.525	TOTAL			TOTAL		3.906	4.802	
			TOTAL LOAD							
	6.438	8.327	14.765 KVA							

Stantec
2890 E Cottonwood Pkwy STE 300
Salt Lake City, UT 84121
Tel: (801) 617-3200
www.stantec.com

The Contractor shall verify and be responsible for all dimensions. DO NOT scale the drawing - any errors or omissions shall be reported to Stantec without delay. The Copyrights to all designs and drawings are the property of Stantec. Reproduction or use for any purpose other than that authorized by Stantec is forbidden.

Consultant

Revision	By	Appd	YYYY.MM.DD

Issued	By	Appd	YYYY.MM.DD
0 CONSTRUCTION SET	MB	JCR	2024.03.18

Permit/Seal

REGISTERED PROFESSIONAL ENGINEER
#6677342
KEITH E. SMITH
03/19/2024
STATE OF UTAH

Client/Project
MAGNA WATER DISTRICT

MAGNA WATER
RECLAMATION FACILITY
"INFLUENT DESIGN PROJECT"
Magna, UT

Project No.: 181301587
File Name: 01587010 3E603
Scale: NO SCALE

BF	KS	DR	2024.03.18
Dwn.	Dsgn.	Chkd.	YYYY.MM.DD

Title
HEADWORKS FACILITY
PANEL SCHEDULE

Revision:
Sheet: 157 of 160
Drawing No.
3E-603

c:\users\keiansmith\adc\accdocs\stantec-consulting\181301587 magna_influent_design\project files\01_wip\13_electrical\01587010 3e603
2024.03.14 12:27:35 PM

ORIGINAL SHEET - ANSI D

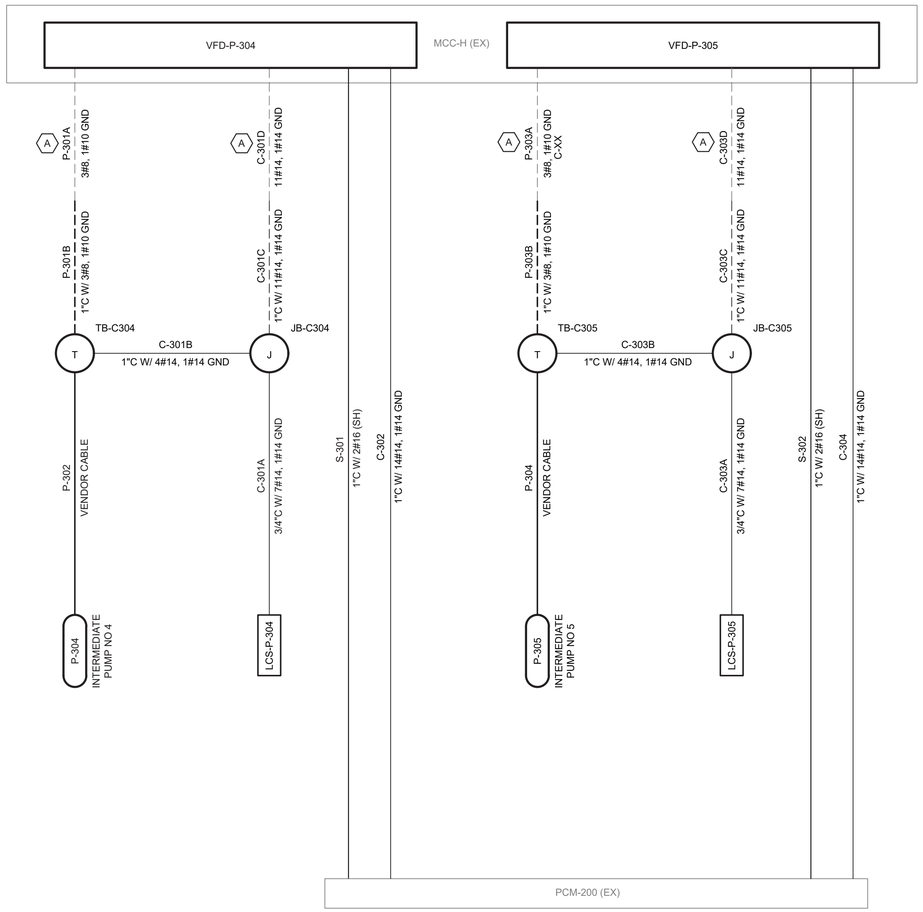

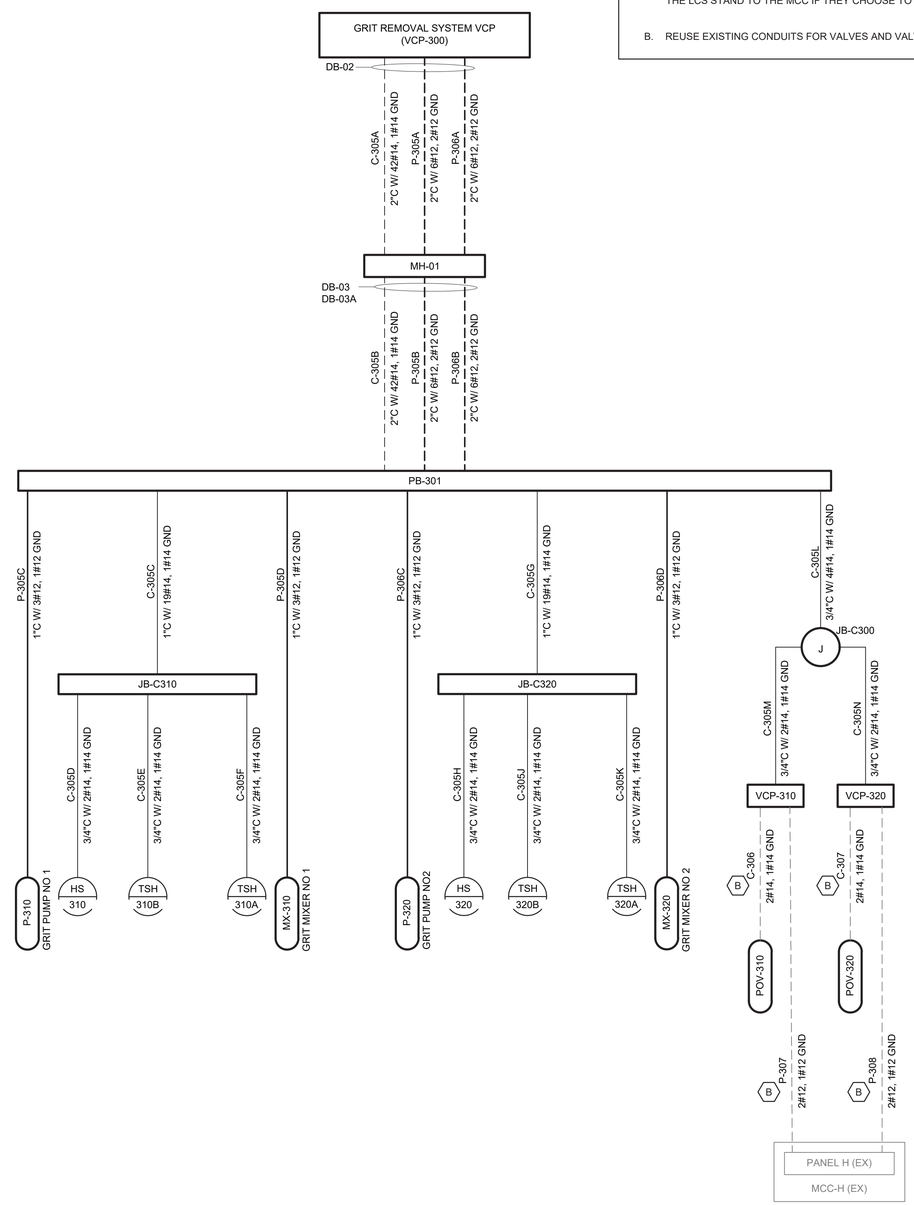

SHEET KEYNOTES

A. CONTRACTOR MAY RUN POWER AND CONTROL CABLES IN THE SAME CONDUIT FROM THE LCS STAND TO THE MCC IF THEY CHOOSE TO REUSE THE EXISTING CONDUIT.

B. REUSE EXISTING CONDUITS FOR VALVES AND VALVE PANELS AS INDICATED.

Stantec
2890 E Cottonwood Pkwy STE 300
Salt Lake City, UT 84121
Tel: (801) 617-3200
www.stantec.com

The Contractor shall verify and be responsible for all dimensions. DO NOT scale the drawing - any errors or omissions shall be reported to Stantec without delay. The Copyrights to all designs and drawings are the property of Stantec. Reproduction or use for any purpose other than that authorized by Stantec is forbidden.

Consultant

Revision	By	Appd	YYYY.MM.DD

Issued	By	Appd	YYYY.MM.DD
0 CONSTRUCTION SET	MB	JCR	2024.03.18

Permit/Seal

REGISTERED PROFESSIONAL ENGINEER
#6677342
KEITH E. SMITH
03/19/2024
STATE OF UTAH

Client/Project
MAGNA WATER DISTRICT

MAGNA WATER RECLAMATION FACILITY
"INFLUENT DESIGN PROJECT"
Magna, UT

Project No.: 181301587
File Name: 0158701 03E604
Scale: NO SCALE

BF	KS	DR	2024.03.18
Dwn.	Dsgn.	Chkd.	YYYY.MM.DD

Title
HEADWORKS FACILITY
CONDUIT DEVELOPMENT

Revision:
Sheet: 158 of 160
Drawing No.
3E-604

ORIGINAL SHEET - ANSI D

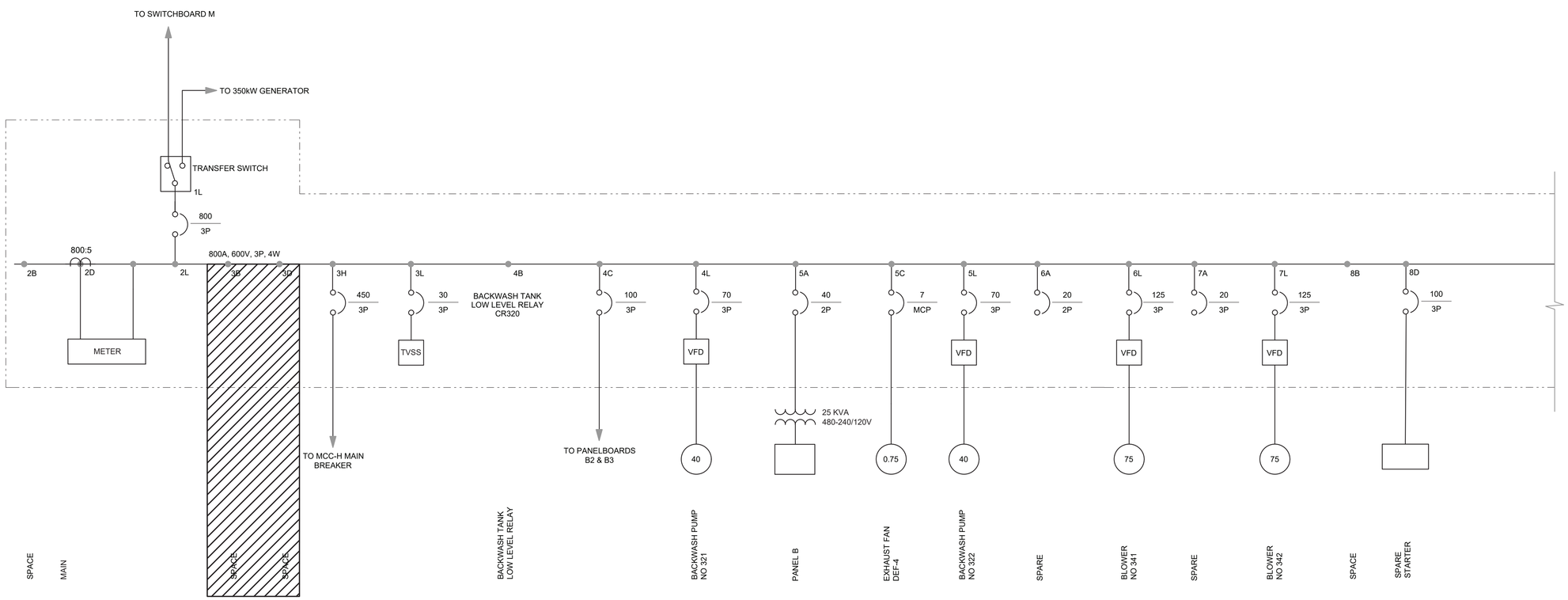

MCC-B SINGLE LINE DIAGRAM

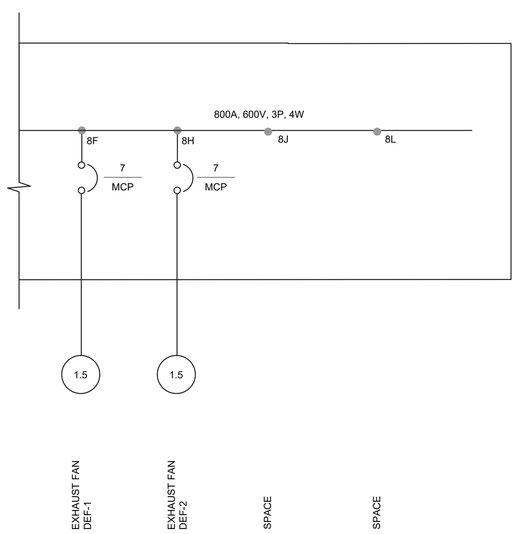

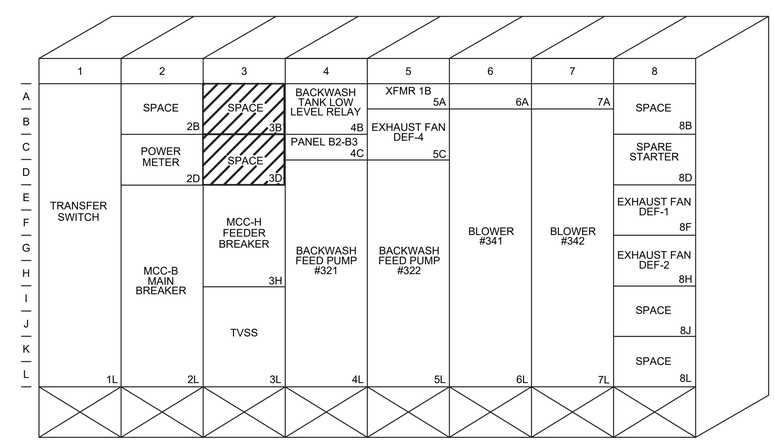

MCC-B ELEVATION

Stantec
2890 E Cottonwood Pkwy STE 300
Salt Lake City, UT 84121
Tel: (801) 617-3200
www.stantec.com

The Contractor shall verify and be responsible for all dimensions. DO NOT scale the drawing - any errors or omissions shall be reported to Stantec without delay. The Copyrights to all designs and drawings are the property of Stantec. Reproduction or use for any purpose other than that authorized by Stantec is forbidden.

Consultant

Revision	By	Appd	YYYY.MM.DD

Issued	By	Appd	YYYY.MM.DD
0 CONSTRUCTION SET	MB	JCR	2024.03.18

Permit/Seal

REGISTERED PROFESSIONAL ENGINEER
#6677342
KEITH E. SMITH
03/19/2024
STATE OF UTAH

Client/Project
MAGNA WATER DISTRICT

MAGNA WATER
RECLAMATION FACILITY
"INFLUENT DESIGN PROJECT"
Magna, UT

Project No.: 181301587

File Name: 015870104ED601

Scale: NO SCALE

BF	KS	DR	2024.03.18
Dwn.	Dsgn.	Chkd.	YYYY.MM.DD

Title
BIOBROX FACILITY
SINGLE LINE DIAGRAM
DEMOLITION

Revision: Sheet: 159 of 160

Drawing No.
4ED601

ORIGINAL SHEET - ANSI D

c:\users\kegsmith.sbc\appdata\local\temp\181301587_magna_influent_design\project files\01_wp\13_electrical\015870104ed601
2024.03.14 10:17:43 AM

SHEET KEYNOTES

A. EXISTING MCC MANUFACTURED BY QES, NEW WORK TO BE DONE BY OR APPROVED BY THE MANUFACTURER. IF THE WORK IS NOT DONE BY QES, IT MUST BE DONE BY SOMEONE WHO CAN MAINTAIN OR UPDATE THE UL LISTING OF THE MCC.

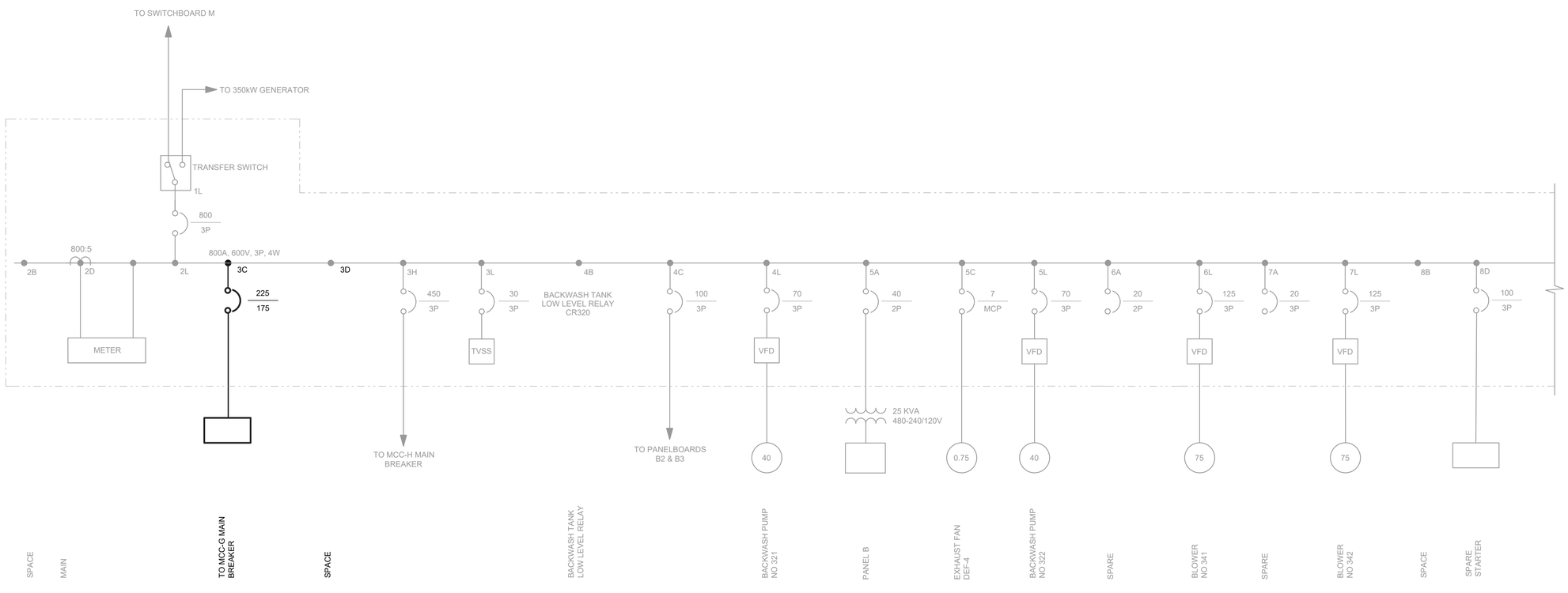

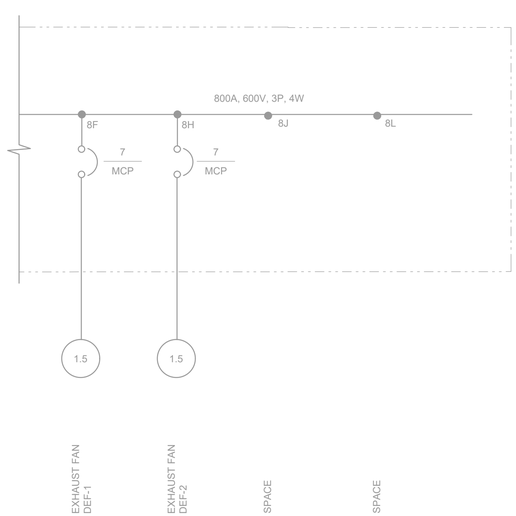

MCC-B SINGLE LINE DIAGRAM (A)

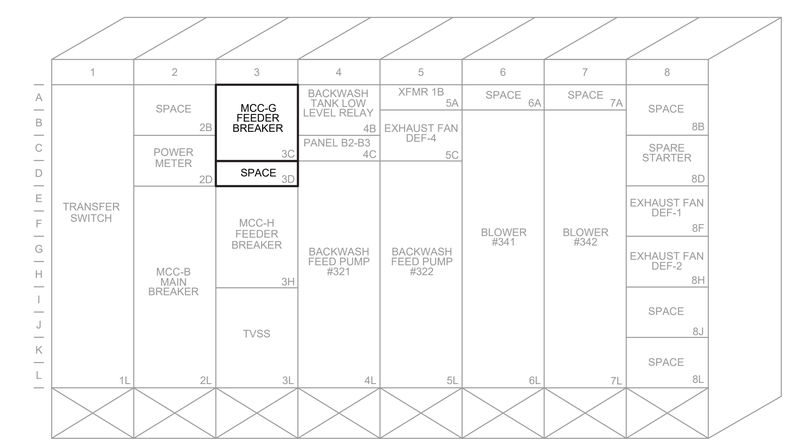

MCC-B ELEVATION (A)

Stantec
Stantec
2890 E Cottonwood Pkwy STE 300
Salt Lake City, UT 84121
Tel: (801) 617-3200
www.stantec.com

The Contractor shall verify and be responsible for all dimensions. DO NOT scale the drawing - any errors or omissions shall be reported to Stantec without delay. The Copyrights to all designs and drawings are the property of Stantec. Reproduction or use for any purpose other than that authorized by Stantec is forbidden.

Consultant

Revision	By	Appd	YYYY.MM.DD

Issued	By	Appd	YYYY.MM.DD
0 CONSTRUCTION SET	MB	JCR	2024.03.18

Permit/Seal

REGISTERED PROFESSIONAL ENGINEER #6677342 KEITH E. SMITH 03/19/2024 STATE OF UTAH

Client/Project
MAGNA WATER DISTRICT

MAGNA WATER RECLAMATION FACILITY "INFLUENT DESIGN PROJECT"

Magna, UT

Project No.: 181301587

File Name: 015870104E601

Scale: NO SCALE

BF	KS	DR	2024.03.18
Dwn.	Dsgn.	Chkd.	YYYY.MM.DD

Title
BIOBROX FACILITY
SINGLE LINE DIAGRAM

Revision: Sheet: 160 of 160

Drawing No.
4E-601

c:\users\keismith\dc\accdocs\stantec consulting\181301587_magna_influent_design\project files\01_wip\13_electrical\015870104e601
2024.03.14 10:20:05 AM

ORIGINAL SHEET - ANSI D