ELECTRICAL PLAN SYMBOLS

IDENTIFICATION SYMBOLS

EQUIP # — EQUIPMENT AND INSTRUMENT IDENTIFICATION

EQUIPMENT/INSTRUMENT LOCATOR

LUMINAIRE IDENTIFICATION
a = CIRCUIT DESIGNATION
b = DEVICE SWITCHED FROM
c = MOUNTING HEIGHT IN FEET TO BOTTOM OF FIXTURE
X = LUMINAIRE TYPE, REFER TO THE LUMINAIRE SCHEDULE

XXXX — CONDUIT IDENTIFICATION
XXXX = CONDUIT NUMBER, REFER TO CONDUIT SCHEDULE
UNLESS OTHERWISE NOTED, GROUPED CONDUITS ARE LABELED LEFT TO RIGHT OR TOP TO BOTTOM.

INDICATES KEYNOTE X (PERTAINS ONLY TO SHEET WHERE NOTE IS FOUND)

DISCONNECT SWITCH
A = TYPE, REFER TO DISCONNECT SCHEDULE

CAMERA

LUMINAIRES

LINEAR FIXTURE

2' X 2' LAY-IN TROFFER

2' X 4' LAY-IN TROFFER

LUMINAIRE POLE MOUNTED

GO/NO-GO PANEL - STROBE AND HORN
R = RED LIGHT
G = GREEN LIGHT
H = HORN

GO/NO-GO PANEL - SOLID

GO/NO-GO PANEL - STROBE

LUMINAIRE, EMERGENCY BATTERY-POWERED

LUMINAIRE, EMERGENCY/EXIT BATTERY-POWERED

LUMINAIRE, EMERGENCY BATTERY-POWERED REMOTE

LUMINAIRE, SURFACE OR PENDANT MOUNTED

LUMINAIRE, WALL MOUNTED

LUMINAIRE, FLOOD/SPOT

LUMINAIRE, EXIT ONE OR TWO FACES AS INDICATED. ARROW POINTS IN DIRECTION OF EGRESS.

SWITCHES/RECEPTACLES

SINGLE POLE SWITCH
a = CIRCUIT DESIGNATION
b = DEVICE SWITCHED DESIGNATION
c = TYPE
2 = DOUBLE POLE SWITCH
3 = THREE-WAY SWITCH
3P = THREE POSITION SWITCH
4 = FOUR-WAY SWITCH
K = KEY OPERATED SWITCH
F = SWITCH AND FUSESTAT HOLDER
P = SWITCH AND PILOT LIGHT
T = THERMOSTAT
D = DIMMER SWITCH
L = LOW VOLTAGE LIGHT SWITCH
M = MANUAL MOTOR STARTER
N = NETWORKED SINGLE OR MULTIPLE SWITCH LOCATIONS

REFER TO ABBREVIATIONS LEGEND FOR ALL OTHER DESIGNATIONS.

OCCUPANCY SENSOR
*REFERENCE LIGHTING CONTROL COMPONENT SCHEDULE
a = CIRCUIT DESIGNATION
b = DEVICE SWITCHED DESIGNATION
c = MOUNTING HEIGHT IN FEET TO BOTTOM OF SENSOR

PHOTOCELL

SWITCH AND SINGLE RECEPTACLE
a = CIRCUIT DESIGNATION
b = DEVICE TYPE DESIGNATION

DUPLEX RECEPTACLE

QUADRUPLEX RECEPTACLE

IN FLOOR DUPLEX RECEPTACLE

IN FLOOR QUADRUPLEX RECEPTACLE

DUPLEX RECEPTACLE w/SPLIT WIRE

DEDICATED RECEPTACLE

SPECIAL PURPOSE RECEPTACLE

WELDING RECEPTACLE
a = CIRCUIT DESIGNATION
b = DISCONNECT TYPE

TWIST LOCK RECEPTACLE
a = AMP RATING

TELEPHONE OUTLET
a = CIRCUIT DESIGNATION
b = MOUNTING HEIGHT

DATA COMMUNICATIONS OUTLET
a = CIRCUIT DESIGNATION
b = MOUNTING HEIGHT

FIRE ALARM

SMOKE DETECTOR
a = TYPE
I = IONIZATION
P = PHOTOELECTRIC
d = DUCT DETECTOR

FACP — FIRE ALARM CONTROL PANEL

F — FIRE ALARM PULL STATION

FIRE ALARM HORN/STROBE COMBINATION

FIRE ALARM STROBE

FIRE SPRINKLER
F = FLOW SWITCH
T = TAMPER SWITCH

RACEWAY

EXPOSED CONDUIT

BREAK AND CONTINUATION IN CONDUIT RUN

EXPOSED CONDUIT HIDDEN BEHIND WALLS, FLOORS OR OTHER STRUCTURES

UNDERGROUND CONDUIT, DIRECT BURIED OR IN DUCT BANK

CONDUIT IN SLAB

CONDUIT VERTICAL CHANGE IN DIRECTION

CONDUIT CAP

J — JUNCTION BOX

CONDUIT SEAL

CONDUIT TEE

DUCT BANK
APPROXIMATE DIMENSIONS SHOWN ON DUCT BANK SECTIONS

CONDUIT SIZE AND CONDUCTORS

INDIVIDUAL CONDUCTORS

W"C-(3-X (Ø), 1-Y (N) & 1-Z (G))

W"C (WHERE INDICATED): W = CONDUIT TRADE SIZE

3-X (Ø):
3 = QUANTITY
X = SIZE OF CONDUCTORS
(Ø) = DESIGNATES PHASE CONDUCTORS

1-Y (N) (WHERE INDICATED):
1 = QUANTITY
Y = SIZE OF CONDUCTORS
(N) = DESIGNATES NEUTRAL CONDUCTORS

1-Z (G) (WHERE INDICATED):
1 = QUANTITY
Z = SIZE OF CONDUCTORS
(G) = DESIGNATES GROUND CONDUCTORS

U{3-X (Ø) & 1-X (G)}
U = NUMBER OF PARALLEL RUNS

VFD CONDUCTORS

U{[N/C-X (Ø) & INTEGRAL (G)];VFD}
U = NUMBER OF PARALLEL RUNS
N/C = NUMBER OF PHASE CONDUCTORS IN CABLE
X = SIZE OF CONDUCTORS
VFD = VFD CABLE

MULTI CONDUCTOR CABLES

K/2/C#16S
K (WHERE INDICATED) = NUMBER OF PAIRS
2/C#16S = TWO CONDUCTOR, 16 GAUGE, TWISTED SHIELDED PAIR

K/3/C#16S
K (WHERE INDICATED) = NUMBER OF TRIPLETS
3/C#16S = THREE CONDUCTOR, 16 GAUGE, TWISTED SHIELDED TRIPLETS

U{[N/C-X (Ø) & INTEGRAL (G)];MC}
U = NUMBER OF PARALLEL RUNS
MC = MULTICONDUCTOR CABLE
N/C = NUMBER OF PHASE CONDUCTORS IN THE CABLE
X = SIZE OF CONDUCTORS

FIBER OPTIC CABLES

FO/N
N = NUMBER OF INDIVIDUAL FIBERS

GROUNDING

UNDERGROUND GROUND CABLE
#4/0 SDBC UNLESS OTHERWISE NOTED

GROUND ROD

GROUND ROD AND GROUND WELL

ELECTRICAL ONE-LINE SYMBOLS

MEDIUM VOLTAGE

52 — CIRCUIT BREAKER, MEDIUM VOLTAGE
a = CIRCUIT BREAKER NUMBER
b = FRAME SIZE

ANSI RELAY DEVICE
a = ANSI DEVICE FUNCTION
b = QUANTITY

MEDIUM VOLTAGE DISCONNECT SWITCH NON-FUSED CUT OUT

MEDIUM VOLTAGE DISCONNECTING FUSE SINGLE FUSE CUT OUT

MEDIUM VOLTAGE DISCONNECTING FUSE DOUBLE FUSE CUT OUT

MEDIUM VOLTAGE SINGLE FUSE

MEDIUM VOLTAGE DOUBLE FUSE

MEDIUM VOLTAGE LIVE FRONT TERMINATOR

MEDIUM VOLTAGE ELBOW

MEDIUM VOLTAGE TEE

MEDIUM VOLTAGE CONTACTOR

MEDIUM VOLTAGE STARTER

MOV-ELBOW ARRESTER

LOW VOLTAGE

LOW VOLTAGE CIRCUIT BREAKER
a = TYPE
MCP = MOTOR CIRCUIT PROTECTOR
TM = THERMAL MAGNETIC
SS = SOLID STATE
b = FRAME SIZE (MANUFACTURER TO DETERMINE FRAME SIZE UNLESS INDICATED)
c = NUMBER OF POLES
d = TRIP SETTING (AT = AMP TRIP)
(AC = MCP CONTINUOUS RATING)
e = DESIGNATION
f = INTERRUPTING RATING

LOW VOLTAGE CIRCUIT BREAKER AUXILIARY OPERATOR
* = S = SHUNT TRIP
= G = GROUND FAULT INTERRUPTER
= V = SOLENOID KEY RELEASE

DISCONNECT SWITCH
A = TYPE, REFER TO DISCONNECT SCHEDULE

FUSED DISCONNECT SWITCH
B = TYPE, REFER TO DISCONNECT SCHEDULE
b = FUSE RATING

FUSE

COMBINATION STARTER WITH CONTROL POWER TRANSFORMER
a = CIRCUIT BREAKER DISCONNECT, TYPE AS NOTED
b = STARTER TYPE
REFER TO THE SPECIFICATIONS FOR STARTER DEFINITIONS.
c = NEMA STARTER SIZE
d = OVERLOAD

MOTOR STARTER/DRIVES:
a = DEVICE TYPE
VFD-6 = 6-PULSE VFD
VFD-18 = 18-PULSE VFD
VFD-RH = REDUCED HARMONIC VFD (18-PULSE OR ACTIVE FRONT END AS DEFINED IN THE SPECIFICATIONS)
RVSS = REDUCED VOLTAGE SOLID STATE STARTER
RVAT = REDUCED VOLTAGE AUTO TRANSFORMER
a/B = DEVICE WITH BYPASS STARTER. REFER TO THE SPECIFICATIONS

b = INPUT OPTIONS
LL = LINE REACTOR
PHF = PASSIVE HARMONIC FILTER

c = OUTPUT OPTIONS
LR = LOAD REACTOR
DV/DT = Dv/dt FILTER
SWF = SINE WAVE FILTER

EQUIPMENT ENCLOSURE

MISCELLANEOUS

HP — MOTOR
HP = HORSEPOWER RATING
FULL LOAD AMPS AS NOTED

PACKAGED EQUIPMENT
LOAD RATING AS INDICATED
a = RATED LOAD
b = UNIT(HP, KW, KVA) AS INDICATED

TRANSFORMER
a = DEVICE I.D.
b = KVA RATING
c = NUMBER OF PHASES
d = PRIMARY VOLTAGE
e = SECONDARY VOLTAGE
f,g = CONNECTION TYPE SYMBOL
h = IMPEDANCE

GROUNDED WYE CONNECTION

DELTA CONNECTION

ENGINE-GENERATOR RATINGS AS INDICATED ON THE DRAWINGS
a = KVA/KW
b = VOLTAGE/CONNECTION
c = PHASE
d = WIRE
e = PF

CURRENT TRANSFORMER WITH SHORTING TERMINAL BLOCK
a = QUANTITY
b = RATIO

POTENTIAL TRANSFORMER
a = QUANTITY
b = RATIO
c,d = CONNECTION TYPE SYMBOL

SSM — SOLID STATE MULTIFUNCTION METER

ATP — AMPERE TEST POINT

VTP — VOLTAGE TEST POINT

UTILITY METER

LIGHTNING ARRESTER

SPD — SURGE PROTECTIVE DEVICE

DRAWOUT CONNECTION

GROUND

CAPACITOR

BATTERY

K — KIRK KEY INTERLOCK

LOAD BANK

REV	DATE	BY	DESCRIPTION
			BID SET

DESIGNED CE
DRAWN CE
CHECKED GCE
DATE FEBRUARY 2025

REGISTERED PROFESSIONAL ENGINEER No. 5329023 GUY C. EHLERS STATE OF UTAH

carollo

JORDAN VALLEY WATER CONSERVANCY DISTRICT

JORDAN VALLEY WATER TREATMENT PLANT
FILTER AND CHEMICAL FEED UPGRADES
ELECTRICAL
ELECTRICAL LEGEND

VERIFY SCALES
BAR IS ONE INCH ON ORIGINAL DRAWING
0 — 1"
IF NOT ONE INCH ON THIS SHEET, ADJUST SCALES ACCORDINGLY

JOB NO. 202001.10
DRAWING NO. 00GE01
SHEET NO. 274 OF 531

ABBREVIATIONS

A	AMP
ABS	ABSOLUTE
AC	ALTERNATING CURRENT
ACK	ACKNOWLEDGE
ACTR	ACTUATOR
AF	AMP FRAME
AFC	AUTOMATIC FREQUENCY CONTROL
AIC	AMP INTERRUPTING CAPACITY
AM	AMMETER
ANN	ANNUNCIATOR
ANT	ANTENNA
APU	AUXILIARY POWER UNIT
ARM	ARMORED CABLE
AS	AMMETER SWITCH
ASYM	ASYMMETRICAL
AT	AMP TRIP
ATO	AUTOMATIC THROW OVER
ATP	AMMETER TEST POINT
ATS	AUTOMATIC TRANSFER SWITCH
AUTO XFMR	AUTOMATIC TRANSFORMER
AUX	AUXILIARY
AWG	AMERICAN WIRE GAGE
B	BELL
BAT	BATTERY
BFG	BELOW FINISHED GRADE
BHP	BRAKE HORSEPOWER
BKR	BREAKER
BRF	BELOW RAISED FLOOR
C	CONDUIT / CONTINUOUS LOAD
CB	CIRCUIT BREAKER
CCTV	CLOSED CIRCUIT TELEVISION
CCW	COUNTER CLOCKWISE
CKT	CIRCUIT
COAX	COAXIAL CABLE
COM	COMMON
COMM	COMMUNICATION
CPT	CONTROL POWER TRANSFORMER
CR	CONTROLLED RECEPTACLE
CS	CONTROL SWITCH
CT	CURRENT TRANSFORMER
CV	CONTROL VALVE
CW	CLOCKWISE / COOL WHITE
DC	DIRECT CURRENT
DCS	DISTRIBUTED CONTROL SYSTEM
DCU - X	DISTRIBUTED CONTROL UNIT NO. X
DEMO	DEMOLITION
DISC	DISCONNECT SWITCH
DM	DEMAND METER
DPDT	DOUBLE POLE DOUBLE THROW
DPST	DOUBLE POLE SINGLE THROW
DS	DOOR SWITCH
E/G	EMERGENCY GENERATOR
EM	EMERGENCY
EMT	ELECTRICAL METALLIC TUBING
ENCL	ENCLOSURE
ENG	ENGINE
ENT	ELECTRICAL NON-METALLIC TUBING
EP	EXPLOSION PROOF
ETM	ELAPSED TIME METER
F	SUB-FED
FA	FIRE ALARM
FACP	FIRE ALARM CONTROL PANEL
FDR	FEEDER
FLA	FULL LOAD AMPS
FLX	FLEXIBLE CONDUIT
FO	FIBER OPTIC
FRC	FIBERGLASS RIGID CONDUIT
FREQ	FREQUENCY
FU	FUSE
FU	SW FUSED SWITCH
FVNR	FULL VOLTAGE NON-REVERSING
FVR	FULL VOLTAGE REVERSING
FWD	FORWARD
G	GROUND / EQUIPMENT GROUND / GROUND FAULT
GEN	GENERATOR
GRC	GALVANIZED STEEL RIGID CONDUIT
GFCI	GROUND FAULT CIRCUIT INTERRUPTER (RECEPTACLE)
GFI	GROUND FAULT INTERRUPTER (BREAKER)
GFR	GROUND FAULT RELAY
H	HOT-LEG
HF	HIGH FREQUENCY
HP	HORSEPOWER
HPS	HIGH PRESSURE SODIUM
HR	HOUR
HSTAT	HUMIDISTAT
HV	HIGH VOLTAGE
HVAC	HEATING/VENTILATION/AIR CONDITIONING
HZ	HERTZ
I	INSTANTANEOUS / INTERMITTENT LOAD
IC	INTERRUPTING CAPACITY
IJB	INSTRUMENT JUNCTION BOX
IMC	INTERMEDIATE METAL CONDUIT
INST	INSTANTANEOUS
INT	INTERLOCK
INTERCOM	INTERCOMMUNICATION
J	JUNCTION BOX
K	KEY INTERLOCK
KA	KILOAMP
KV	KILOVOLT
KVA	KILOVOLT AMPERE
KVAR	KILOVAR (REACTANCE)
KW	KILOWATT
KWD	KILOWATT DEMAND
KWH	KILOWATT HOUR
L	LONG-TIME
L-B	LINE-BUS
L-G	LINE-GROUND
LA	LIGHTNING ARRESTOR
LBL	LABEL
LC	LIGHTING CONTACT OR
LCP- X	LOCAL CONTROL PANEL NO. X
LL	LEAD-LAG LOAD REACTOR
LP	LIGHT POLE
LP - X	LIGHTING PANEL NO. X
LTG	LIGHTING
LV	LOW VOLTAGE
LVL	LEVEL
M-X	MOTOR CONTROLLER NO. X
MA	MILLIAMPERE
MCA	MOTOR CIRCUIT AMPS
MCC - X	MOTOR CONTROL CENTER NO. X
MCP	MOTOR CIRCUIT PROTECTOR
MH	MANHOLE / MOUNTING HEIGHT
MLO	MAIN LUGS ONLY
MOD	MOTOR OPERATED DAMPER
MOV	METAL OXIDE VARISTOR
MPR	MOTOR PROTECTION RELAY
MS-X	MOTOR STARTER NO. X
MSP	MOTOR STARTING PANEL
MTO	MANUAL THROW OVER
MTR-X	MOTOR NO. X
MTS	MANUAL TRANSFER SWITCH
MV	MEGAVOLT
MVA	MEGAVOLT-AMPERES
MVS	MEDIUM VOLTAGE SWITCH
MW	MEGAWATT
N	NEUTRAL
NC	NORMALLY CLOSED
NEC	NATIONAL ELECTRICAL CODE
NFC	NONMETALLIC FLEXIBLE CONDUIT
NL	NIGHT LIGHT
NO	NORMALLY OPEN
NP	NAMEPLATE
O	OPEN OR OPENED
OH	OVERHEAD
OL	OVERLOAD RELAY
P	POLE
PA	PUBLIC ADDRESS
PB	PUSHBUTTON / PULL BOX
PCS	PVC COATED GALVANIZED STEEL CONDUIT
PCM	PROCESS CONTROL MODULE
PE	PHOTOCELL
PF	POWER FACTOR
PFCC	POWER FACTOR CORRECTION CAPACITOR
PFR	PHASE FAILURE RELAY
PH	PHASE
PNL	PANEL
PP-X	POWER PANEL NO. X
PRI	PRIMARY
PT	POTENTIAL TRANSFORMER
PVC	POLYVINYL CHLORIDE RIGID PLASTIC CONDUIT
PWR	POWER
RAC	RIGID ALUMINUM CONDUIT
RECPT	RECEPTACLE
REV	REVERSE
RF	RADIO FREQUENCY
RMS	ROOT MEAN SQUARED
RVAT	REDUCED VOLTAGE AUTO TRANSFORMER
RVNR	REDUCED VOLTAGE NON-REVERSING
RVSS	REDUCED VOLTAGE SOLID STATE
S	SHIELD / SHORT-TIME
SA	SURGE ARRESTER
SC	SHORT CIRCUIT
SDBC	SOFT DRAWN BARE COPPER
SFL	SUB FEED LUGS
SLT	SEALTIGHT LIQUIDTIGHT FLEXIBLE CONDUIT
SM	SURFACE MOUNTED
SP	SINGLE POLE
SPD	SURGE PROTECTIVE DEVICE
SPDT	SINGLE POLE DOUBLE THROW
SPST	SINGLE POLE SINGLE THROW
SPKR	SPEAKER
SS	SOLID STATE
STB	SHORTING TERMINAL BLOCK
SW	SWITCH
SWBD	SWITCHBOARD
SWGR	SWITCHGEAR
SYM	SYMMETRICAL
TACH	TACHOMETER
TB - X	TERMINAL BLOCK - UNIT X
TC	THERMOCOUPLE / TIME CLOCK / TRAY CABLE
TD	TEMPERATURE DETECTOR RELAY
TE	TOTALLY ENCLOSED
TEFC	TOTALLY ENCLOSED FAN COOLED
TENV	TOTALLY ENCLOSED NON-VENTILATED
TERM	TERMINAL
TJB	TERMINAL JUNCTION BOX
TM	THERMAL MAGNETIC
TP	TWISTED PAIR
TS	TEMPERATURE SWITCH
TS1W	TWO SPEED CONSEQUENT POLE, ONE WINDING
TS2W	TWO SPEED SEPARATE WINDING
TSTAT	THERMOSTAT
UHF	ULTRA HIGH FREQUENCY
UNG	UNGROUNDED
UPS	UNINTERRUPTIBLE POWER SUPPLY
UVR	UNDER VOLTAGE RELAY
V	VOLT
VA	VOLT AMPERE
VAR	VARMETER
VCP	VENDOR CONTROL PANEL
VFD	VARIABLE FREQUENCY DRIVE
VHF	VERY HIGH FREQUENCY
VM	VOLTMETER
VP	VAPORPROOF
VR	VOLTAGE REGULATOR
VS	VOLTAGE SWITCH
VT	VOLTAGE TRANSFORMER
VTP	VOLTAGE TEST POINT
W	WATT / WEST
WT	WATER TIGHT
WP	WEATHER PROOF
XFMR	TRANSFORMER

NOTES:

1. REFER TO SPECIFICATIONS AND OTHER DRAWINGS FOR ADDITIONAL ABBREVIATIONS.

GENERAL NOTES FOR LIGHTING, RECEPTACLE AND GROUNDING PLANS

1. GROUND ALL ELECTRICAL EQUIPMENT ENCLOSURES PER TYPICAL DETAIL EG205.
2. ENGRAVE RECEPTACLE AND SWITCH COVER PLATES PER TYPICAL DETAIL EN002.

GENERAL NOTES FOR POWER AND CONTROL PLANS

1. CONDUIT ROUTING FOR EXPOSED CONDUIT INSTALLATION IS GENERALLY REPRESENTED AS "HOMERUNS" ON THE POWER AND CONTROL PLANS. SIZE POWER AND CONTROL RACEWAYS PER THE REQUIREMENTS IN THE SPECIFICATIONS FOR CONDUIT FILL. PROVIDE 3/4" MINIMUM CONDUIT SIZE, OR THE MINIMUM SHOWN IN THE CONDUIT SCHEDULE, WHICHEVER IS GREATER. UPSIZE CONDUITS WHEN DERATING OR COMBINING WIRES PER NEC REQUIREMENTS.
2. EXISTING FILTER BUILDING LEVEL 1 HAS CABLE TRAYS ON THE NORTH AND SOUTH SIDES AND INTO THE MCC AREA. USE THESE TRAYS FOR NEW WORK WHENEVER POSSIBLE RATHER THAN INSTALLING UNNECESSARY CONDUITS. TRAYS ALREADY HAVE SEVERAL CONDUITS SUSPENDED UNDER THE TRAYS WITH LITTLE ROOM FOR MORE. INSTALL TRAY CABLE IN TRAYS. USE EXISTING CONDUCTORS WHENEVER POSSIBLE.
3. DEMOLISH ALL CONDUIT AND CONDUCTORS THAT ARE BEING REPLACED OR ABANDONED.
4. A MAJORITY OF THE FV-3XXX'S ALREADY HAVE POWER FED FROM VARIOUS PP-#'S. USE THESE EXISTING CABLES WHEN FEASIBLE. CABLES FOR THESE FV'S ARE SHOWN IN THE CONDUIT SCHEDULE AS A PLACE HOLDER TO DENOTE ALL CABLES FOR THESE DEVICES. IF EXISTING CABLE IS REUSED AND DIFFERS FROM CONDUIT SCHEDULE CABLE SIZE, CONTRACTOR TO REVISE CONDUIT SCHEDULE TO REFLECT CABLE SIZE AND TYPE FOR DOCUMENTATION.
5. CONDUIT AND CONDUCTOR SIZES SHOWN IN THE CONDUIT SCHEDULE REPRESENT THE MINIMUM SIZES REQUIRED AND DO NOT INCLUDE ANY DERATION FACTORS.
6. SUBMIT SIZING AMPACITY AND CONDUIT SIZING CALCULATIONS WHEN COMBINING WIRES WITHIN COMMON CONDUITS BEYOND OR DIFFERENTLY THAN WHAT IS ALREADY SHOWN AS COMBINED IN THE CONDUIT SCHEDULE; THE CALCULATIONS SHALL INCLUDE DE-RATING FACTORS USED WHEN COMBINING CURRENT-CARRYING CONDUCTORS WITHIN EACH CONDUIT. THE CALCULATIONS SHOULD MATCH THE SAME TAGS AS THE DETAILED CONTRACTOR DRAWINGS AND CONDUIT SCHEDULE. GENERAL CONSTRAINTS FOR COMBINING WIRES ARE LISTED AS FOLLOWS:
   - A) ONLY CONDUITS WITH THE SAME "TYPE" (AS INDICATED BY THE HOMERUN PREFIX TAG) MAY BE COMBINED. FOR EXAMPLE, "P" CONDUITS MAY BE COMBINED WITH OTHER "P" CONDUITS, BUT "P" CONDUITS MAY NOT BE COMBINED WITH "C" CONDUITS.
   - B) DO NOT COMBINE MORE THAN 18 CURRENT-CARRYING CONDUCTORS WITHIN A CONDUIT.
   - C) DO NOT EXCEED MORE THAN 50 CONTROL WIRES WITHIN A "C" CONDUIT.
   - D) DO NOT EXCEED MORE THAN 20 INSTRUMENT CABLES WITHIN AN "S" CONDUIT.
   - E) DO NOT EXCEED MORE THAN 20 CABLES WITHIN A "N" CONDUIT.
7. WHEN THE CONDUIT PATH TRANSITIONS TO EMBEDDED, UNDERGROUND, OR DUCT BANK, USE THE ROUTING DESCRIBED IN THE CONDUIT SCHEDULE. DO NOT UPSIZE CONDUIT SIZES OR COMBINE CONDUIT CONTENT ABOVE WHAT IS SHOWN IN CONDUIT SCHEDULE.
8. UTILIZE THE SAME FORMAT FOR ALL CONDUIT AND WIRE TAGS USED WITHIN THE CONDUIT SCHEDULE. GAPS IN NUMBERS ARE INTENTIONALLY PROVIDED SO THAT THE CONTRACTOR MAY UTILIZE THIS METHOD.
9. PROVIDE EXPANSION/DEFLECTION FITTINGS FOR CONDUITS THAT TRANSITION INTO DUCT BANK.
10. PROVIDE EXPANSION/DEFLECTION FITTINGS FOR CONDUIT RUNS CROSSING EXPANSION JOINTS PER DETAIL EM126/TYP. SEE STRUCTURAL DRAWINGS FOR EXACT LOCATIONS OF EXPANSIONS JOINTS.
11. PROVIDE HAZARDOUS AREA CONSTRUCTION INCLUDING CONDUIT SEALS (PER DETAIL EM108/TYP) AS REQUIRED BY SECTION 16052 AND THE NATIONAL ELECTRICAL CODE BASED ON THE HAZARDOUS AREA CLASSIFICATION REQUIREMENTS STIPULATED IN 16050.
12. CORE DRILL THROUGH NEW OR EXISTING ABOVE GRADE CONCRETE WALLS PER DETAIL EM163/TYP. CORE DRILL THROUGH NEW OR EXISTING ABOVE GRADE CMU WALLS PER DETAIL EM173/TYP. CORE DRILL THROUGH NEW OR EXISTING BELOW GRADE CONCRETE WALLS PER DETAIL EM133/TYP.
13. PROVIDE ELECTRICAL EQUIPMENT NAMEPLATES PER DETAIL EN001/TYP.
14. CORE DRILL THROUGH NEW OR EXISTING INTERIOR CONCRETE SLAB PER DETAIL EM139/TYP. CORE DRILL BELOW GRADE FROM OUTSIDE OF STRUCTURE TO INSIDE OF STRUCTURE THROUGH NEW OR EXISTING CONCRETE SLAB PER DETAIL EM136/TYP.

POWER DEVICE FUNCTION NUMBERS

1	MASTER ELEMENT
2	TIME-DELAY STARTING OR CLOSING RELAY
3	CHECKING OR INTERLOCKING RELAY
4	MASTER CONTACTOR
5	STOPPING DEVICE
6	STARTING CIRCUIT BREAKER
7	ANODE CIRCUIT BREAKER
8	CONTROL POWER DISCONNECTING DEVICE
9	REVERSING DEVICE
10	UNIT SEQUENCE SWITCH
11	MULTIFUNCTION DEVICE
12	OVER-SPEED DEVICE
13	SYNCHRONOUS-SPEED DEVICE
14	UNDER-SPEED DEVICE
15	SPEED OR FREQUENCY MATCHING DEVICE
16	DATA COMMUNICATIONS DEVICE
17	SHUNTING OR DISCHARGE SWITCH
18	ACCELERATING OR DECELERATING DEVICE
19	STARTING-TO-RUNNING TRANSITION CONTACTOR
20	ELECTRICALLY OPERATED VALVE
21	DISTANCE RELAY
22	EQUALIZER CIRCUIT BREAKER
23	TEMPERATURE CONTROL DEVICE
24	VOLTS PER HERTZ RELAY
25	SYNCHRONIZING OR SYNCHRONISM-CHECK DEVICE
26	APPARATUS THERMAL DEVICE
27	UNDERVOLTAGE RELAY
27N	GROUND FAULT UNDERVOLTAGE RELAY
28	FLAME DETECTOR
29	ISOLATING CONTACTOR
30	ANNUNCIATOR RELAY
31	SEPARATE EXCITATION DEVICE
32	DIRECTIONAL POWER RELAY
33	POSITION SWITCH
34	MASTER SEQUENCE DEVICE
35	BRUSH-OPERATING OR SLIP-RING SHORT-CIRCUITING DEVICE
36	POLARITY DEVICE
37	UNDERCURRENT OR UNDERPOWER RELAY
38	BEARING PROTECTIVE DEVICE
39	MECHANICAL CONDITION MONITOR
40	FIELD RELAY
41	FIELD CIRCUIT BREAKER
42	RUNNING CIRCUIT BREAKER
43	MANUAL TRANSFER OR SELECTOR DEVICE
44	UNIT SEQUENCE STARTING RELAY
45	ABNORMAL ATMOSPHERIC CONDITION MONITOR
46	REVERSE-PHASE OR BALANCE CURRENT RELAY
47	PHASE-BALANCE OR PHASE-SEQUENCE VOLTAGE RELAY
48	INCOMPLETE SEQUENCE RELAY
49	MACHINE OR TRANSFORMER THERMAL RELAY
50	INSTANTANEOUS OVERCURRENT RELAY
51	AC TIME OVERCURRENT RELAY
52	AC CIRCUIT BREAKER
53	FIELD EXCITATION RELAY
54	TURNING GEAR ENGAGING DEVICE
55	POWER FACTOR RELAY
56	FIELD APPLICATION RELAY
57	SHORT-CIRCUITING OR GROUNDING DEVICE
58	RECTIFICATION FAILURE RELAY
59	OVERVOLTAGE RELAY
60	VOLTAGE OR CURRENT BALANCE RELAY
61	DENSITY SWITCH OR SENSOR
62	TIME-DELAY STOPPING OR OPENING RELAY
63	PRESSURE SWITCH
64	GROUND DETECTOR RELAY
65	GOVERNOR
66	NOTCHING OR JOGGING DEVICE
67	AC DIRECTIONAL OVERCURRENT RELAY
68	BLOCKING OR OUT OF STEP RELAY
69	PERMISSIVE CONTROL DEVICE
70	RHEOSTAT
71	LIQUID LEVEL SWITCH
72	DC CIRCUIT BREAKER
73	LOAD-RESISTOR CONTACTOR
74	ALARM RELAY
75	POSITION CHANGING MECHANISM
76	DC OVERCURRENT RELAY
77	TELEMETERING DEVICE
78	PHASE-ANGLE MEASURING RELAY
79	AC RECLOSING RELAY
80	FLOW SWITCH
81	FREQUENCY RELAY
82	DC LOAD MEASURING RECLOSING RELAY
83	AUTOMATIC SELECTIVE CONTROL OR TRANSFER RELAY
84	OPERATING MECHANISM
85	PILOT COMMUNICATIONS, CARRIER OR PILOT-WIRE RELAY
86	LOCKOUT RELAY
87	DIFFERENTIAL PROTECTIVE RELAY
88	AUXILIARY MOTOR OR MOTOR GENERATOR
89	LINE SWITCH
90	REGULATING DEVICE
91	VOLTAGE DIRECTIONAL RELAY
92	VOLTAGE AND POWER DIRECTIONAL RELAY
93	FIELD-CHANGING CONTACTOR
94	TRIPPING OR TRIP-FREE RELAY

COMMONLY USED SUFFIX LETTERS APPLIED TO POWER DEVICE FUNCTION NUMBERS

A	ALARM ONLY
B	BUS PROTECTION
G	GROUND FAULT PROTECTION (RELAY CT IN A SYSTEM NEUTRAL CIRCUIT OR GENERATOR PROTECTION)
GS	GROUND FAULT PROTECTION (RELAY CT IN TOROIDAL OR GROUND SENSOR TYPE)
L	LINE PROTECTION
M	MOTOR PROTECTION
N	GROUND FAULT PROTECTION (RELAY COIL CONNECTED IN RESIDUAL CT CIRCUIT)
T	TRANSFORMER PROTECTION
V	VOLTAGE
P	PHASE PROTECTION

ABBREVIATIONS

AFD	- ARC FLASH DETECTOR
CLK	- CLOCK OR TIMING SOURCE
DDR	- DYNAMIC DISTURBANCE RECORDER
DFR	- DIGITAL FAULT RECORDER
ENV	- ENVIRONMENTAL DATA
HIZ	- HIGH IMPEDANCE FAULT DETECTOR
HMI	- HUMAN MACHINE INTERFACE
HST	- HISTORIAN
LGC	- SCHEME LOGIC
MET	- SUBSTATION METERING
PDC	- PHASOR DATA CONCENTRATOR
PMU	- PHASOR MEASUREMENT UNIT
PQM	- POWER QUALITY MONITOR
RIO	- REMOTE I/O DEVICE
RTU	- REMOTE TELEMETRY UNIT/REMOTE TERMINAL UNIT
SER	- SEQUENCE OF EVENTS RECORDER
TCM	- TRIP CIRCUIT MONITOR

REV	DATE	BY	DESCRIPTION
			BID SET

DESIGNED CE
DRAWN CE
CHECKED GCE
DATE FEBRUARY 2025

REGISTERED PROFESSIONAL ENGINEER No. 5329023 GUY C. EHLERS STATE OF UTAH

carollo®

JORDAN VALLEY WATER CONSERVANCY DISTRICT

JORDAN VALLEY WATER TREATMENT PLANT
FILTER AND CHEMICAL FEED UPGRADES
ELECTRICAL
ELECTRICAL ABBREVIATIONS AND GENERAL NOTES

VERIFY SCALES
BAR IS ONE INCH ON ORIGINAL DRAWING
0 1"
IF NOT ONE INCH ON THIS SHEET, ADJUST SCALES ACCORDINGLY

JOB NO. 202001.10
DRAWING NO. 00GE02
SHEET NO. 275 OF 531

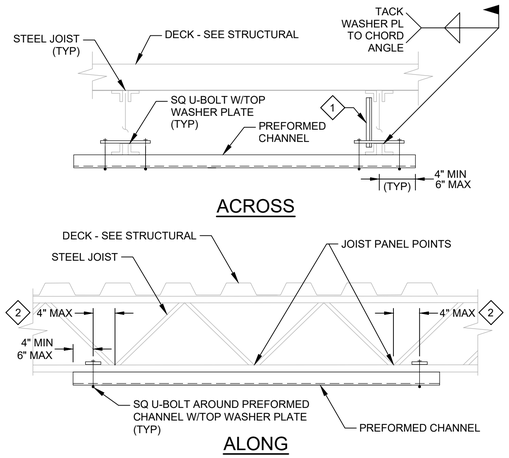

KEY NOTES:

1. WHERE CHANNEL IS OFFSET FROM JOIST PANEL POINT BY MORE THAN 4" ADD LOAD POINT BRACE PER SM802 (TYP).
2. LOCATE U-BOLTS MAX 4" PAST JOIST PANEL POINTS NEAREST EACH END OF LUMINAIRE AND MAX 48" ALONG PREFORMED CHANNEL.

EA020 TYP S — ATTACHMENT TO STEEL JOISTS

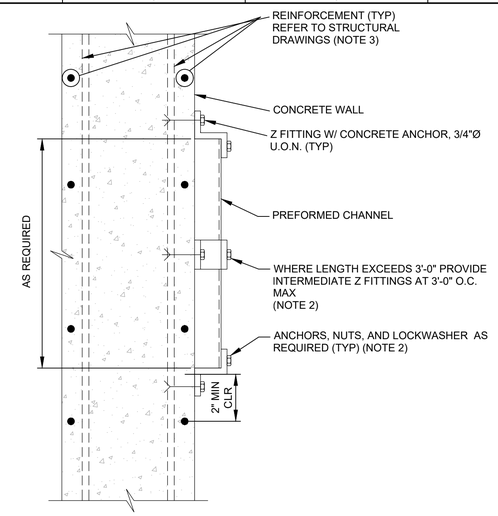

GENERAL NOTES:

1. THIS DETAIL TYPICAL FOR BOTH VERTICAL AND HORIZONTAL MOUNTING.
2. SUPPORTS TO BE SPACED IN ACCORDANCE WITH NEC REQUIREMENTS. CONCRETE ANCHORS SHALL BE PER THE SPECIFICATIONS.
3. REFER TO STRUCTURAL DRAWINGS FOR ORIENTATION OF REINFORCEMENT AND BARS.

EA070 TYP S — PREFORMED CHANNEL ATTACHMENT TO CONCRETE WALL

9/9/22

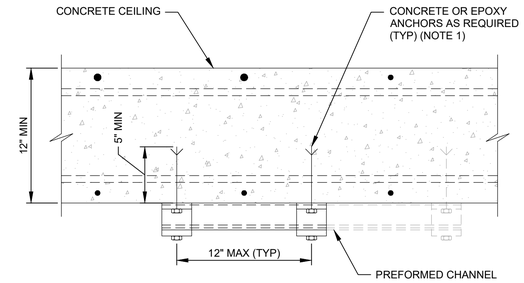

GENERAL NOTES:

1. A FOOT UNISTRUT SUPPORT WITH TWO CONCRETE OR EPOXY ANCHORS 12" APART IS RATED FOR 500 LBS.
2. EACH EXTENSION WITH ADDITIONAL ANCHORS AT 12" INCREMENTS INCREASES THE LOADING CAPACITY BY 500 LBS.
3. SUBMIT ANCHORAGE CALCULATIONS WHEN LOAD EXCEEDS 500 LBS. REFER TO THE SPECIFICATIONS.

EA075 TYP S — PREFORMED CHANNEL ATTACHMENT TO CONCRETE CEILING

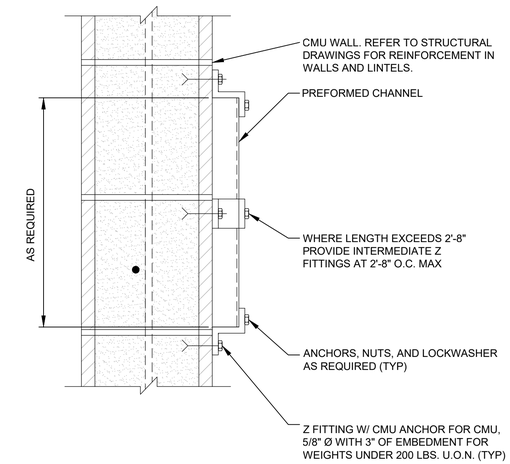

GENERAL NOTES:

1. THIS DETAIL TYPICAL FOR BOTH VERTICAL AND HORIZONTAL MOUNTING.
2. SUPPORTS TO BE SPACED IN ACCORDANCE WITH NEC REQUIREMENTS. CONCRETE ANCHORS SHALL BE PER THE SPECIFICATIONS.

EA080 TYP S — PREFORMED CHANNEL ATTACHMENT TO FULLY GROUTED CMU WALL

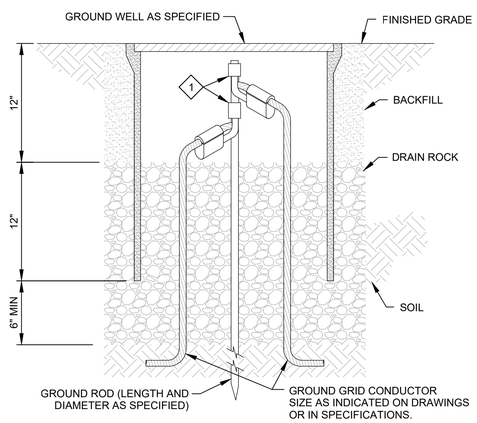

KEY NOTES:

1. GROUND ROD TO GROUND GRID CROSS CONNECTOR. SIZE FOR ROD AND CABLE PER CONNECTOR MANUFACTURERS GUIDELINES.

EG001 TYP S — GROUND ROD AND GROUNDWELL COMPRESSION CONNECTION

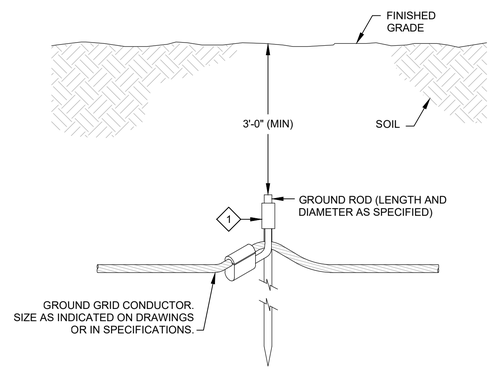

KEY NOTES:

1. GROUND ROD TO GROUND GRID CROSS CONNECTOR. SIZE FOR ROD AND CABLE PER CONNECTOR MANUFACTURERS GUIDELINES.

EG002 TYP S — GROUND ROD COMPRESSION CONNECTION

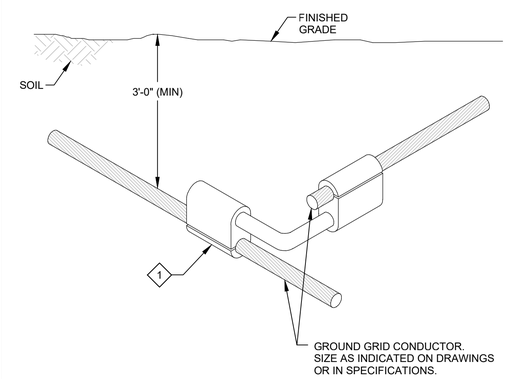

KEY NOTES:

1. GROUND GRID CROSS CONNECTOR. SIZE FOR CABLE PER CONNECTOR MANUFACTURERS GUIDELINES.

EG101 TYP S — COPPER GROUNDING CABLE CONNECTION COMPRESSION CONNECTION

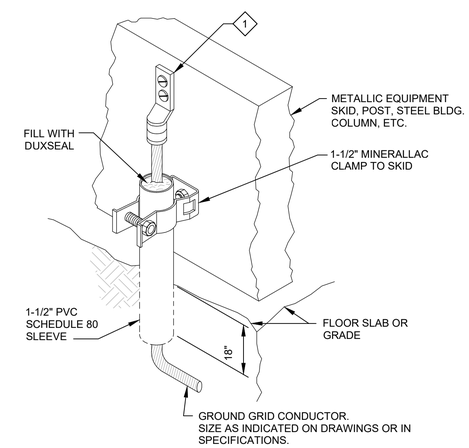

GENERAL NOTES:

1. CLEAN ALL PAINTED SURFACES TO BARE METAL BEFORE BOLTING ON THE GROUND LUG.
2. NOTE: BOLT GROUND LUG ONLY TO EQUIPMENT SKIDS OR STRUCTURE, NOT TO EQUIPMENT OR TANK SHELLS.

KEY NOTES:

1. HEAVY DUTY COMPRESSION TERMINAL.

EG201 TYP S — EQUIPMENT SKID GROUNDING COMPRESSION CONNECTION

REV	DATE	BY	DESCRIPTION
			BID SET

DESIGNED CE
DRAWN CE
CHECKED GCE
DATE FEBRUARY 2025

REGISTERED PROFESSIONAL ENGINEER No. 5329023 GUY C. EHLERS STATE OF UTAH

carollo

JORDAN VALLEY WATER CONSERVANCY DISTRICT

JORDAN VALLEY WATER TREATMENT PLANT
FILTER AND CHEMICAL FEED UPGRADES
ELECTRICAL
TYPICAL DETAILS 1

VERIFY SCALES
BAR IS ONE INCH ON ORIGINAL DRAWING
0 1"
IF NOT ONE INCH ON THIS SHEET, ADJUST SCALES ACCORDINGLY

JOB NO. 202001.10
DRAWING NO. 00GE03
SHEET NO. 276 OF 531

Plot Date: 9/12/2022 7:29:07 AM
LAST SAVED BY: dscheele

PROJECT NO. 202001-100000 FILE NAME: 20200100GE03.dwg

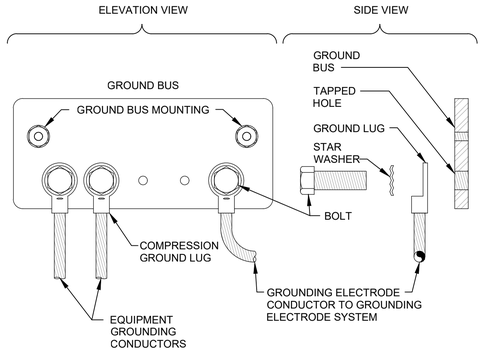

EG204 TYP S GROUND BUS CONNECTIONS

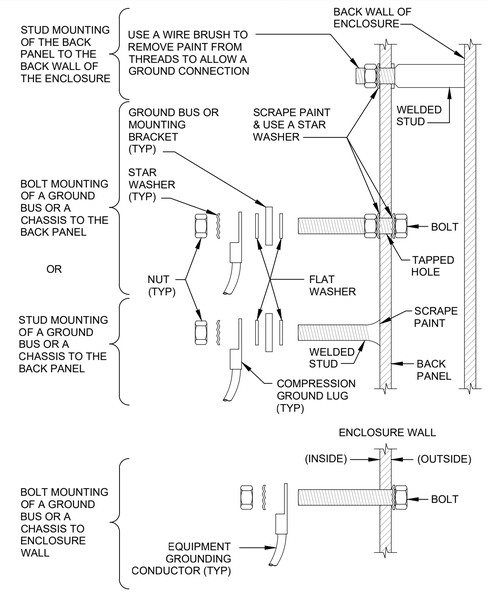

EG205 TYP S ENCLOSURE GROUNDING DETAILS

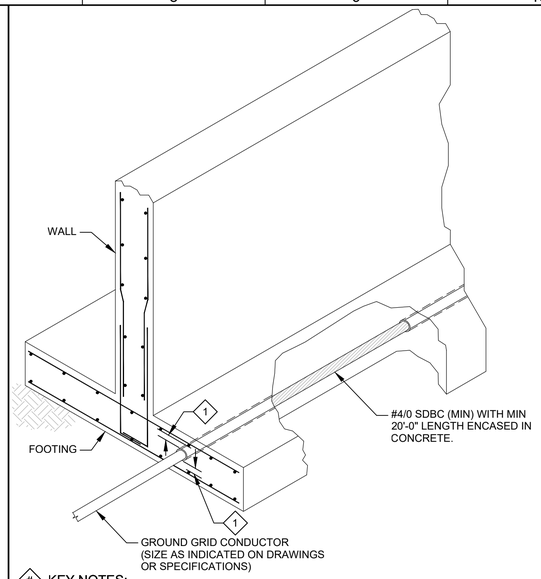

KEY NOTES:

1. GROUND GRID CONDUCTOR TO BE FULLY ENCASED IN CONCRETE. PROVIDE MIN 1 1/2" CLEAR BETWEEN CONDUCTOR & REINFORCING BARS, OR BETWEEN CONDUCTOR AND FACE OF CONCRETE.

EG304 TYP S GROUNDING CONNECTION TO FOOTING (UFER)

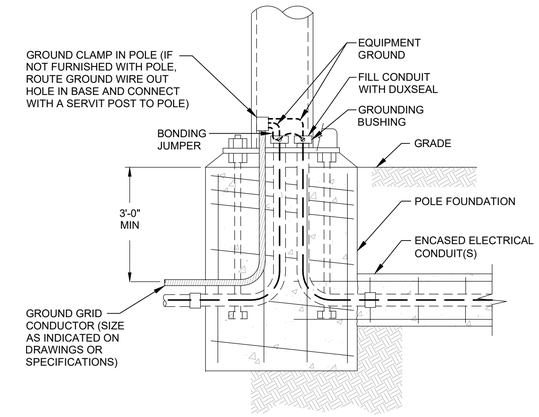

EG402 TYP INTERIOR LIGHT POLE GROUNDING

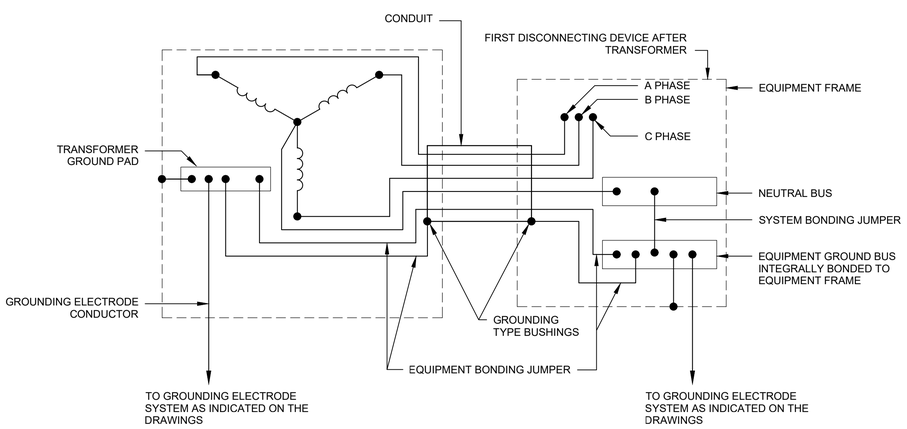

EG511 TYP S TRANSFORMER (NON-UTILITY) 3-PHASE, 4-WIRE SECONDARY POWER GROUNDING DETAIL

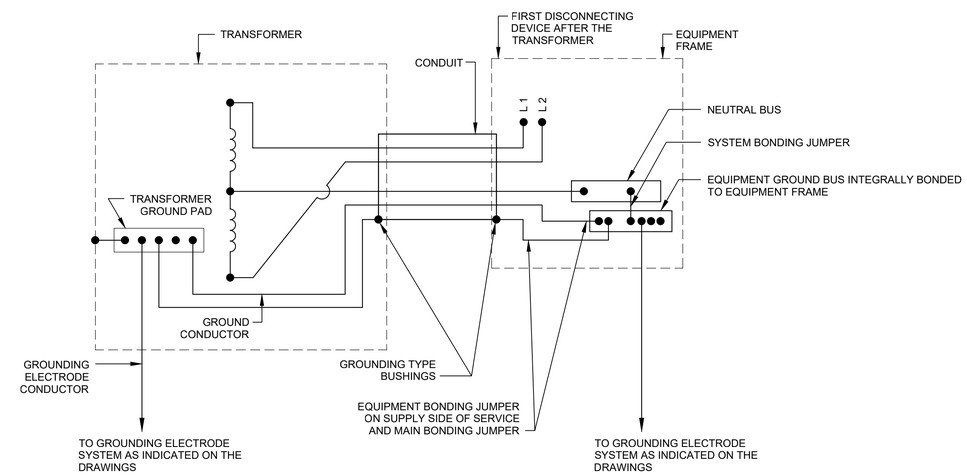

EG512 TYP 1-PHASE TRANSFORMER (NON-UTILITY) GROUNDING DETAIL

REV	DATE	BY	DESCRIPTION
			BID SET

DESIGNED CE
DRAWN CE
CHECKED GCE
DATE FEBRUARY 2025

REGISTERED PROFESSIONAL ENGINEER No. 5329023 GUY C. EHLERS STATE OF UTAH

carollo®

JORDAN VALLEY WATER CONSERVANCY DISTRICT

JORDAN VALLEY WATER TREATMENT PLANT
FILTER AND CHEMICAL FEED UPGRADES
ELECTRICAL
TYPICAL DETAILS 2

VERIFY SCALES
BAR IS ONE INCH ON ORIGINAL DRAWING
0 1"
IF NOT ONE INCH ON THIS SHEET, ADJUST SCALES ACCORDINGLY

JOB NO. 202001.10
DRAWING NO. 00GE04
SHEET NO. 277 OF 531

Plot Date: 9/12/2022 7:29:07 AM
LAST SAVED BY: jdbriones

PROJECT NO. 202001-100000 FILE NAME: 20200100GE04.dwg

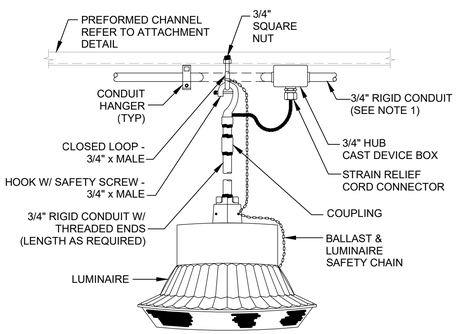

GENERAL NOTES:

1. AT LUMINAIRE ATTACHMENT, PROVIDE CONDUIT BEND AROUND LUMINAIRE CLOSED LOOP ASSEMBLY.

EL100 TYP S PENDANT LUMINAIRE MOUNTING

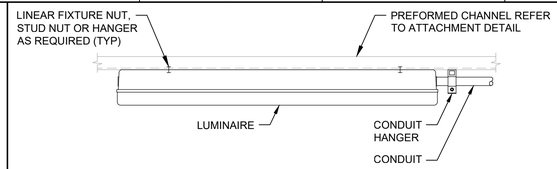

FLUSH MOUNTED

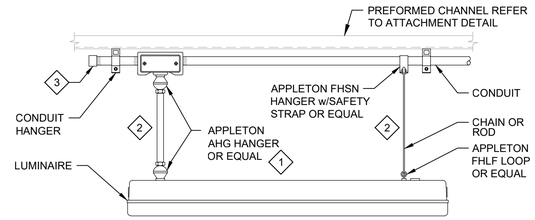

SUSPENDED

KEY NOTES:

1. USE MEYERS HUB IN WET AND/OR CORROSIVE AREAS.
2. LENGTH AS REQUIRED FOR INDICATED MOUNTING HEIGHT.
3. CAP END CONDUIT AS REQUIRED.

EL200 TYP S LINEAR LUMINAIRE MOUNTING

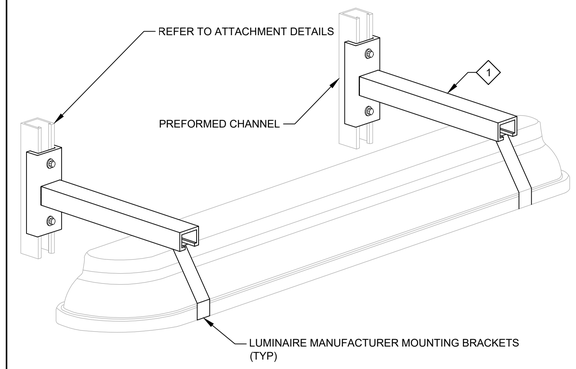

GENERAL NOTES:

1. PROVIDE 1 SUPPORT AT EACH LUMINAIRE MOUNTING BRACKET.
2. REFER TO THE SPECIFICATIONS FOR MATERIAL REQUIREMENTS.

KEY NOTES:

1. REFER TO THE PLAN DRAWINGS FOR LUMINAIRE DISTANCE FROM THE WALL.
2. COORDINATE THE MACHINE SCREW AND CHANNEL NUT THREAD SIZE AND LENGTH WITH THE LUMINAIRE MOUNTING BRACKET.

EL215 TYP WALL MOUNTED PREFORMED LUMINAIRE SUPPORT

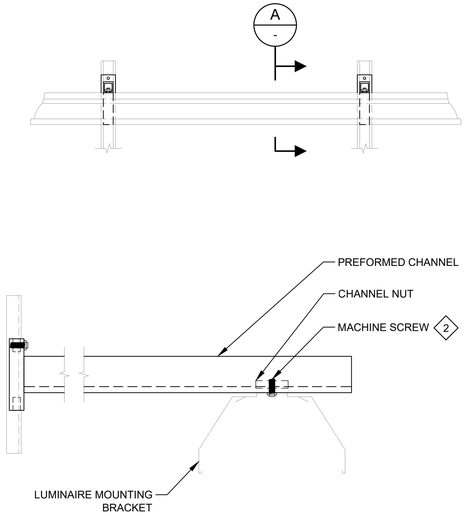

A - SECTION

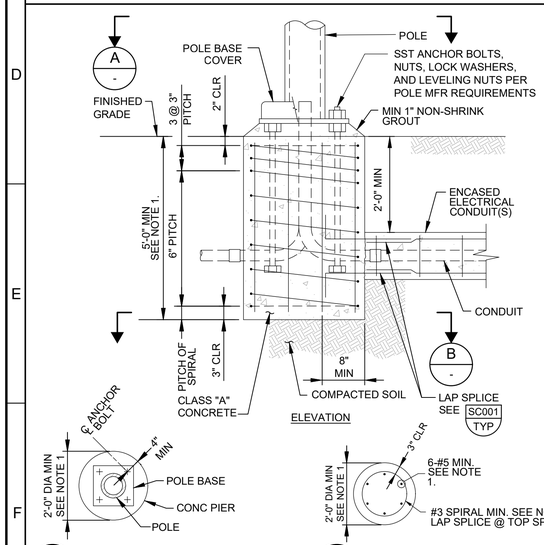

A - SECTION

B - SECTION

GENERAL NOTES:

1. USE MINIMUM DIMENSIONS AND REINFORCEMENT SHOWN UNLESS OTHERWISE NOTED. PROVIDE WIND LOAD CALCULATIONS AND INCREASE DIMENSIONS AS REQUIRED.

EL507 TYP POLE FOUNDATION NON-TRAFFIC AREAS

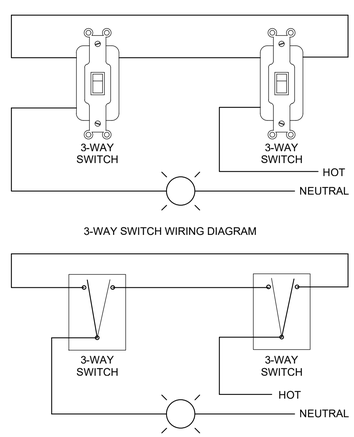

3-WAY SWITCH WIRING DIAGRAM

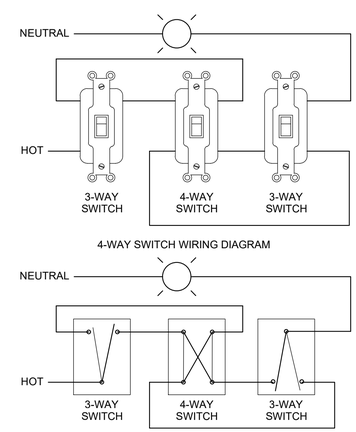

4-WAY SWITCH WIRING DIAGRAM

EL700 TYP 3-WAY SWITCH ONE-LINE DIAGRAM

EL701 TYP 4-WAY SWITCH ONE-LINE DIAGRAM

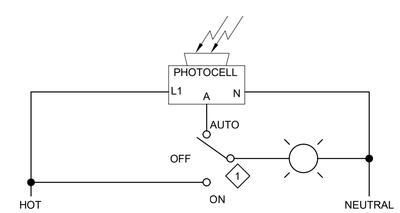

KEY NOTES:

1. REFER TO THE SPECIFICATIONS FOR SWITCH REQUIREMENTS.

EL703 TYP S PHOTO-ELECTRIC EYE CONTROL

REV	DATE	BY	DESCRIPTION
			BID SET

DESIGNED CE
DRAWN CE
CHECKED GCE
DATE FEBRUARY 2025

REGISTERED PROFESSIONAL ENGINEER No. 5329023 GUY C. EHLERS STATE OF UTAH

carollo

JORDAN VALLEY WATER CONSERVANCY DISTRICT

JORDAN VALLEY WATER TREATMENT PLANT
FILTER AND CHEMICAL FEED UPGRADES
ELECTRICAL
TYPICAL DETAILS 3

VERIFY SCALES
BAR IS ONE INCH ON ORIGINAL DRAWING
0 1"
IF NOT ONE INCH ON THIS SHEET, ADJUST SCALES ACCORDINGLY

JOB NO. 202001.10
DRAWING NO. 00GE05
SHEET NO. 278 OF 531

Plot Date: 9/12/2022 7:29:07 AM
LAST SAVED BY: jdbriones
PROJECT NO. 202001-100000 FILE NAME: 20200100GE05.dwg

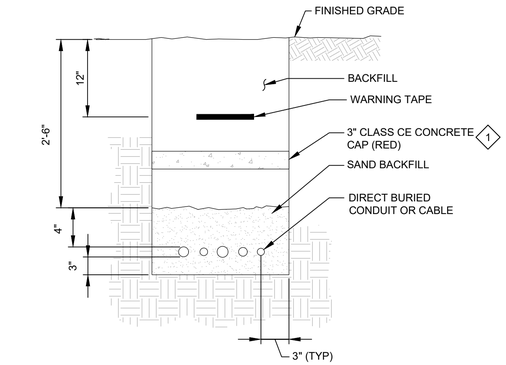

GENERAL NOTES:

1. ALL DIMENSIONS ARE MINIMUM UNLESS OTHERWISE INDICATED ON THE DRAWINGS.
2. REFER TO THE SPECIFICATIONS FOR TRENCH BACKFILL REQUIREMENTS.

KEY NOTES:

1. WHERE INDICATED ON THE DRAWING.

EM015 TYP — DIRECT BURIED CONDUIT OR CABLE

R 01/23/25

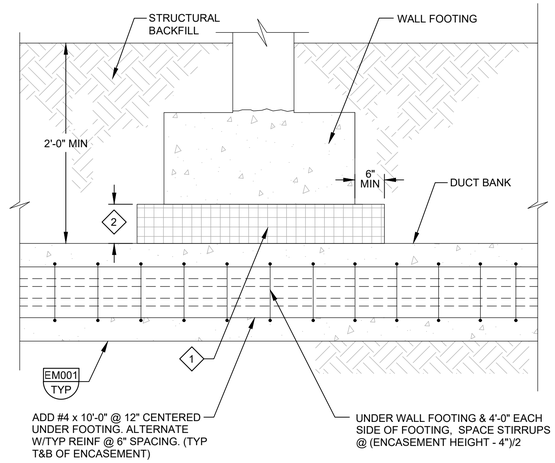

KEY NOTES:

1. EXPANDED POLYPROPYLENE OR SIMILAR ENERGY ABSORBING COMPRESSIBLE MATERIAL.
2. REFER TO SPECIFICATIONS FOR REQUIRED MINIMUM DISTANCE BETWEEN TOP OF DUCT BANK AND BOTTOM FOOTER.

EM021 TYP — DUCT BANK CROSSING UNDER FOOTER

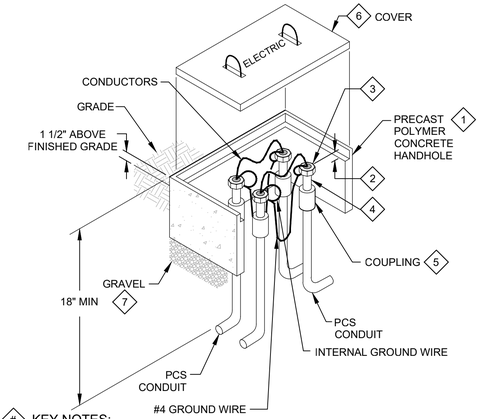

KEY NOTES:

1. PRECAST POLYMER CONCRETE HANDHOLE WITH OPEN BOTTOM FOR DRAINAGE. DO NOT INSTALL POLYMER CONCRETE HANDHOLES IN ROADWAYS.
2. ALLOW SUFFICIENT SPACE BETWEEN THE CONDUIT AND HANDHOLE LID FOR BENDING RADIUS OF WIRES AND CABLES.
3. INSULATED GROUNDING BUSHINGS. BOND BUSHINGS TO EACH OTHER WITH #4 WIRE AND TO GROUND CONDUCTORS IN EACH CONDUIT.
4. NIPPLE (USED TO COMPACT DUCT SEAL IN COUPLING).
5. PACK COUPLING AREA WITH DUCT SEAL BY MANVILLE OR APPROVED EQUAL.
6. PROVIDE "TIER"-RATED COVER PER MANHOLE AND HANDHOLE SCHEDULE.
7. GRAVEL BED FOR LEVELING & DRAINAGE. MINIMUM 12" DEEP & EXTENDING AT LEAST 6" EACH WAY PAST OUTSIDE LIMITS OF HANDHOLE.

EM052 TYP — ELECTRICAL HANDHOLE: PRECAST POLYMER CONCRETE

S

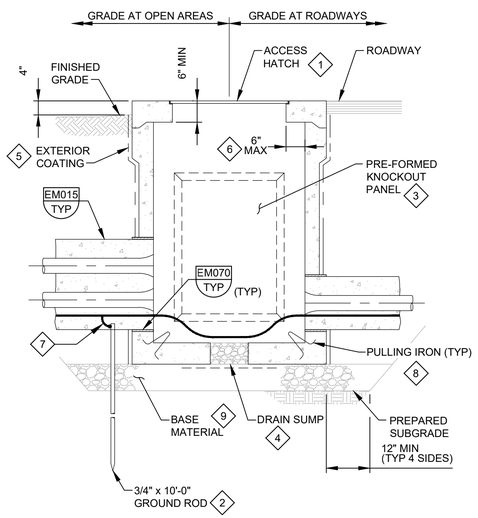

GENERAL NOTES:

1. PROVIDE MINIMUM INTERIOR DIMENSIONS AS SHOWN IN THE ELECTRICAL HANDHOLE AND MANHOLE SCHEDULE.
2. BOND ALL METALLIC ITEMS INSIDE HANDHOLE TO GROUND ROD USING #4 AWG BARE COPPER CABLE.
3. SEE DRAWINGS FOR ORIENTATION, NUMBER, AND SIZE OF DUCT BANKS AT EACH HANDHOLE.

KEY NOTES:

1. SEE THE MANHOLE AND HANDHOLE SCHEDULE FOR REQUIRED LOAD RATING OF HATCH.
2. BOND DUCT BANK GROUND CABLE TO GROUND ROD. REFER TO THE SPECIFICATIONS FOR CONNECTION REQUIREMENTS.
3. INSTALL DUCT BANKS ONLY THROUGH CAST-IN OPENINGS OR PREFORMED KNOCKOUT PANELS. PROVIDE KNOCKOUTS ON EACH WALL AROUND HANDHOLE.
4. PROVIDE MINIMUM 4 INCH DIAMETER, GRAVEL FILLED PENETRATION THROUGH FLOOR OF HANDHOLE. SET SUMP OPENING OVER MINIMUM 18" SQUARE FILTER FABRIC TO ISOLATE GRAVEL FROM BASE MATERIAL BELOW.
5. COAT EXTERIOR WALLS BELOW GRADE WITH BITUMINOUS DAMP PROOFING.
6. MAXIMUM TOP SLAB OVERHANG IS TYPICAL AROUND 4 SIDES OF HANDHOLE.
7. GROUNDING CABLE CONNECTION. REFER TO THE SPECIFICATIONS FOR CONNECTION REQUIREMENTS.
8. PROVIDE ONE PULLING IRON ON EACH WALL OF HANDHOLE.
9. BASE MATERIAL: PROVIDE MIN 12" COMPACTED AGGREGATE BASE COURSE.

EM056 TYP — ELECTRICAL HANDHOLE PRECAST CONCRETE W/HATCH

R 01/23/25

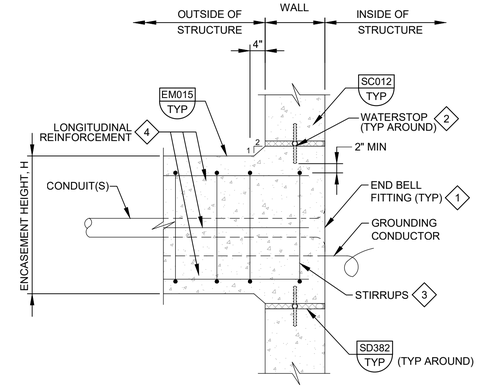

KEY NOTES:

1. PROVIDE GROUNDING FITTING FOR METALLIC CONDUITS ENTERING MANHOLE. BOND GROUNDING FITTING TO DUCTBANK GROUNDING CONDUCTOR.
2. 6" PVC CENTERBULB WATERSTOP TYPICAL AROUND PERIMETER OF ENCASEMENT.
3. FOR FIRST 12'-0" FROM INSIDE FACE OF STRUCTURE, STIRRUP SPACING, IN INCHES = (H-4)/2, WHERE H = CONCRETE ENCASEMENT HEIGHT IN INCHES.
4. ADDITIONAL #4 x 12'-0" @ 12" ON ALL FOUR FACES OF ENCASEMENT. ALTERNATE WITH TYPICAL REINFORCEMENT FOR 6" SPACING.

EM071 TYP — ENCASED CONDUITS AT MANHOLES OR STRUCTURES - WITH WATERSTOP

R 01/23/25

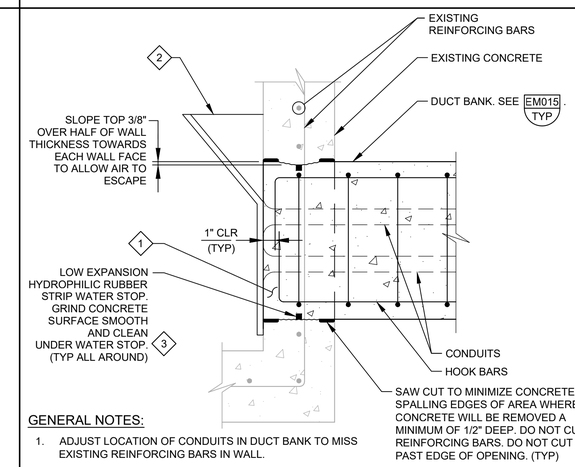

GENERAL NOTES:

1. ADJUST LOCATION OF CONDUITS IN DUCT BANK TO MISS EXISTING REINFORCING BARS IN WALL.
2. ROUGHEN CONCRETE TO 1/4" AMPLITUDE AND COAT WITH EPOXY RESIN/PORTLAND CEMENTS BONDING AGENT.

KEY NOTES:

1. REMOVE CONCRETE AS SHOWN FOR NEW DUCT BANK PENETRATION THROUGH WALL. DO NOT CUT EXISTING REINFORCING BARS.
2. USE THE "BIRDS BEAK" FORM FOR ACCESS FOR VIBRATOR AND TO ALLOW CONCRETE TO BE PLACED UNDER SLIGHT PRESSURE. AFTER FORMS ARE REMOVED, REMOVE PROJECTING CONCRETE AND FINISH TO MATCH FINISH OF EXISTING CONCRETE.
3. SIKA SWELLSTOP OR EQUAL. FOLLOW MANUFACTURER'S INSTALLATIONS DETAILS. MINIMUM 2" CONCRETE COVER ON EITHER SIDE.

EM072 TYP — DUCT BANK CONNECTION TO EXISTING HANDHOLE, PULL BOX, OR WALL

R 01/23/25

REV	DATE	BY	DESCRIPTION
			BID SET

DESIGNED CE
DRAWN CE
CHECKED GCE
DATE FEBRUARY 2025

REGISTERED PROFESSIONAL ENGINEER No. 5329023 GUY C. EHLERS STATE OF UTAH

carollo®

JORDAN VALLEY WATER CONSERVANCY DISTRICT

JORDAN VALLEY WATER TREATMENT PLANT
FILTER AND CHEMICAL FEED UPGRADES
ELECTRICAL
TYPICAL DETAILS 4

VERIFY SCALES
BAR IS ONE INCH ON ORIGINAL DRAWING
0 1"
IF NOT ONE INCH ON THIS SHEET, ADJUST SCALES ACCORDINGLY

JOB NO. 202001.10
DRAWING NO. 00GE06
SHEET NO. 279 OF 531

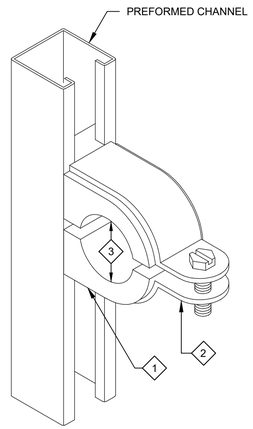

KEY NOTES:

1. PORCELAIN CABLE CLAMP
2. PIPE CLAMP
3. SIZE HOLE BASED ON CONDUCTOR SIZE

EM076 TYP S PORCELAIN CABLE CLAMP

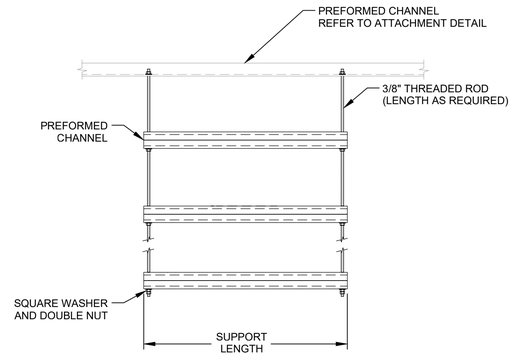

GENERAL NOTES:

1. PROVIDE NUMBER AND LENGTH OF PREFORMED CHANNEL SUPPORTS AS REQUIRED BY EQUIPMENT AND MATERIALS TO BE INSTALLED.
2. PROVIDE SEISMIC BRACING PER THE SPECIFICATIONS.
3. REFER TO SPECIFICATIONS FOR MATERIAL REQUIREMENTS.

EM102 TYP S TRAPEZE SUPPORT

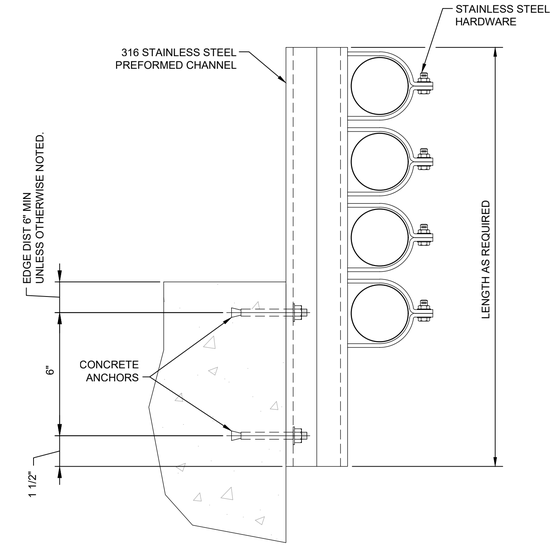

EM103 TYP CONDUIT SUPPORT

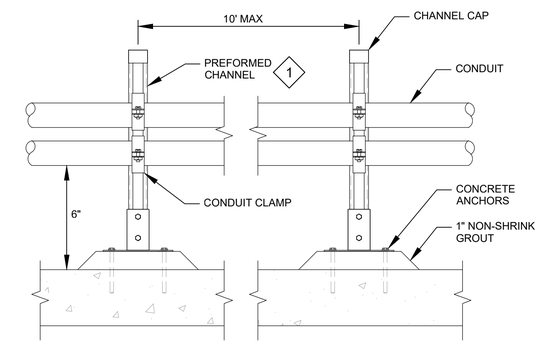

KEY NOTES:

1. SIZE PREFORMED CHANNEL FOR CONDUITS INDICATED ON THE DRAWINGS.

EM104 TYP CONDUIT FLOOR SUPPORT FOR ELECTRICAL CONDUITS

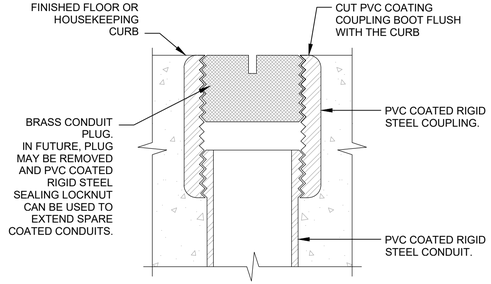

ENCASED CONDUITS

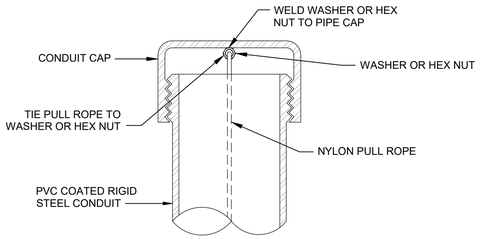

EXPOSED CONDUITS

GENERAL NOTES:

1. PROVIDE 2" MIN CLEAR BETWEEN ADJACENT CONDUITS

EM105 TYP S SPARE CONDUIT DETAIL

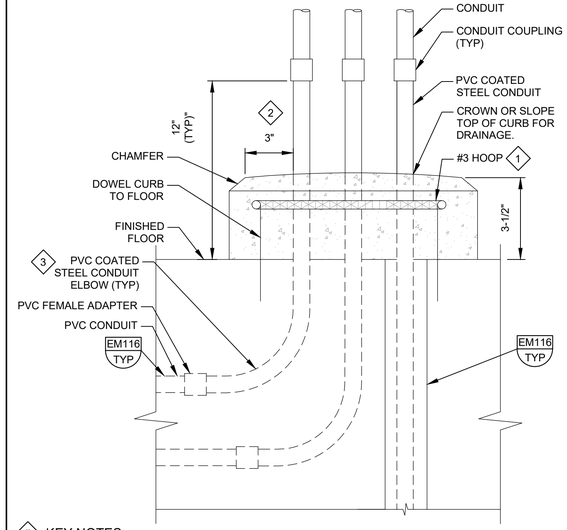

KEY NOTES:

1. TYPICAL BOTH SIDES, FRONT AND REAR.
2. COORDINATE REINFORCING STEEL REQUIREMENTS WITH THE CONTRACTOR.
3. FIELD BEND 1" CONDUITS. PROVIDE MANUFACTURED PCS ELBOWS FOR CONDUITS 1.25" AND LARGER.

EM107 TYP S CONDUIT HOUSEKEEPING CURB

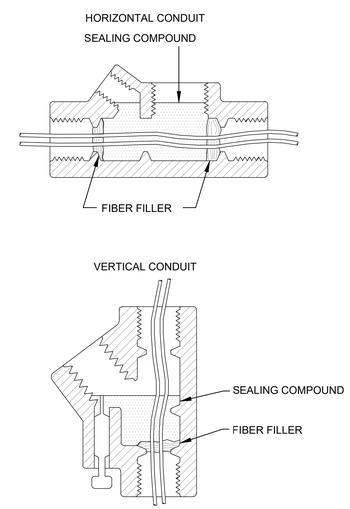

EM108 TYP S CONDUIT SEAL DAMMING AND POURING DETAIL

REV	DATE	BY	DESCRIPTION
			BID SET

DESIGNED CE
DRAWN CE
CHECKED GCE
DATE FEBRUARY 2025

REGISTERED PROFESSIONAL ENGINEER No. 5329023 GUY C. EHLERS STATE OF UTAH

carollo

JORDAN VALLEY WATER CONSERVANCY DISTRICT

JORDAN VALLEY WATER TREATMENT PLANT
FILTER AND CHEMICAL FEED UPGRADES
ELECTRICAL
TYPICAL DETAILS 5

VERIFY SCALES
BAR IS ONE INCH ON ORIGINAL DRAWING
0 1"
IF NOT ONE INCH ON THIS SHEET, ADJUST SCALES ACCORDINGLY

JOB NO. 202001.10
DRAWING NO. 00GE07
SHEET NO. 280 OF 531

Plot Date: 9/12/2022 7:29:07 AM
LAST SAVED BY: jdbriones
PROJECT NO. 202001-100000 FILE NAME: 20200100GE07.dwg

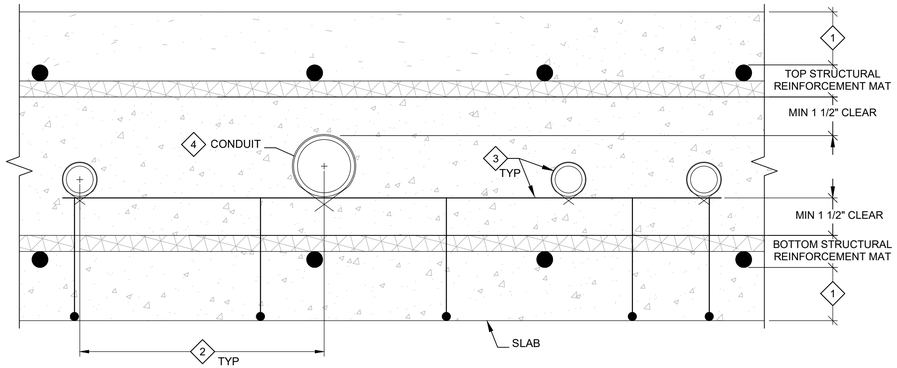

GENERAL NOTES:

1. MOVE CONDUITS TO AVOID CONFLICTS WITH WATERSTOPS. WHERE HORIZONTAL AND VERTICAL CLEARANCES CANNOT BE MAINTAINED, CONTACT ENGINEER FOR INSTRUCTION'S BEFORE PLACING CONCRETE.

KEY NOTES:

1. FOR REQUIRED TOP AND BOTTOM COVER OVER REINFORCEMENT SEE TYPICAL DETAIL SC001.
2. MINIMUM ON CENTER HORIZONTAL SPACING OF PARALLEL CONDUITS = 4X OUTSIDE DIAMETER OF THE LARGER CONDUIT.
3. SUPPORT CONDUITS ON ADDED REINFORCEMENT CHAIRS OR BOLSTERS. TIE CONDUITS TO SUPPORTS AND ANCHOR TO PREVENT FLOTATION.
4. CENTER LARGEST DIAMETER CONDUIT BETWEEN TOP AND BOTTOM REINFORCEMENT MATS.

EM115 TYP S — EMBEDDED CONDUIT IN CONCRETE SLAB SINGLE RUN

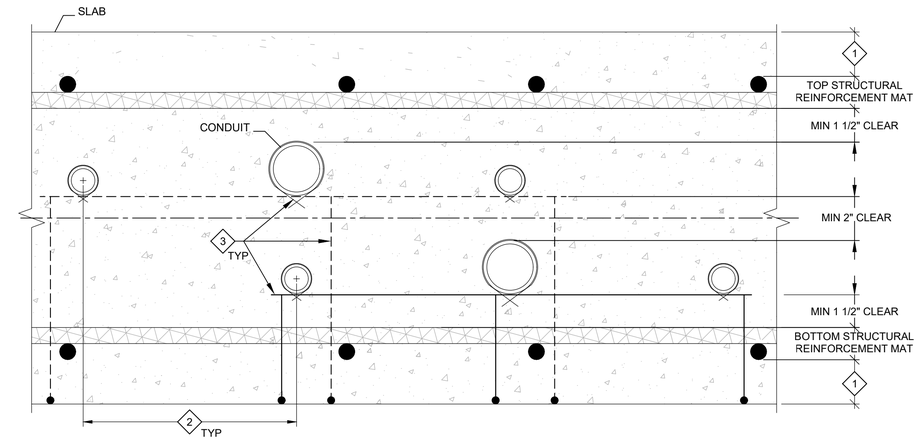

GENERAL NOTES:

1. MOVE CONDUITS TO AVOID CONFLICTS WITH WATERSTOPS. WHERE HORIZONTAL AND VERTICAL CLEARANCES CANNOT BE MAINTAINED, CONTACT ENGINEER FOR INSTRUCTION'S BEFORE PLACING CONCRETE.

KEY NOTES:

1. FOR REQUIRED TOP AND BOTTOM COVER OVER REINFORCEMENT SEE TYPICAL DETAIL SC001.
2. MINIMUM ON CENTER HORIZONTAL SPACING OF PARALLEL CONDUITS = 4X OUTSIDE DIAMETER OF THE LARGER CONDUIT.
3. SUPPORT CONDUITS ON ADDED REINFORCEMENT CHAIRS OR BOLSTERS. TIE CONDUITS TO SUPPORTS & ANCHOR TO PREVENT FLOTATION.
4. WHERE MORE THAN 2 RUNS ARE STACKED, PROVIDE HORIZONTAL AND VERTICAL SPACING SHOWN BETWEEN EACH PAIR.

EM116 TYP S — EMBEDDED CONDUIT IN CONCRETE SLAB STACKED RUNS

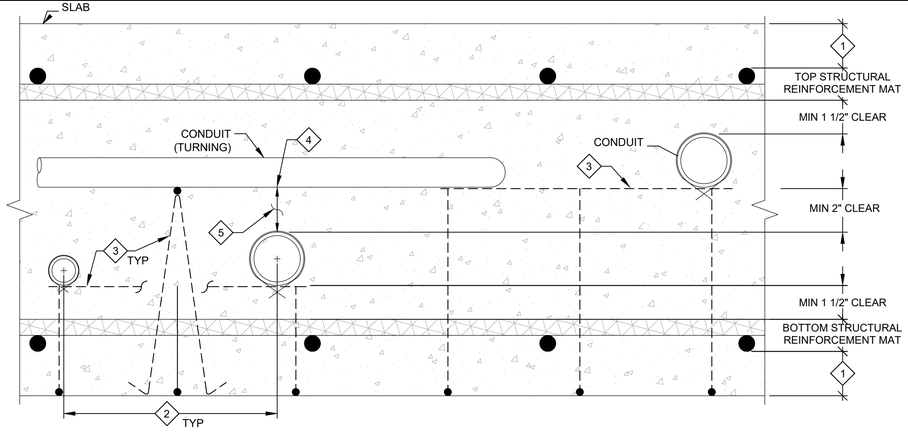

GENERAL NOTES:

1. MOVE CONDUITS TO AVOID CONFLICTS WITH WATERSTOPS. WHERE HORIZONTAL AND VERTICAL CLEARANCES CANNOT BE MAINTAINED, CONTACT ENGINEER FOR INSTRUCTION'S BEFORE PLACING CONCRETE.

KEY NOTES:

1. FOR REQUIRED TOP AND BOTTOM COVER OVER REINFORCEMENT SEE TYPICAL DETAIL SC001.
2. MINIMUM ON CENTER HORIZONTAL SPACING OF PARALLEL CONDUITS = 4X OUTSIDE DIAMETER OF THE LARGER CONDUIT.
3. SUPPORT CONDUITS ON ADDED REINFORCEMENT BOLSTERS, OCM METAL BAR SUPPORT PRODUCT TYPE OR EQUAL. TIE CONDUITS TO SUPPORTS AND ANCHOR TO PREVENT FLOTATION.
4. WHERE CONDUITS CROSS, PROVIDE MIN HORIZONTAL SPACING BETWEEN PARALLEL CONDUITS NOT LESS THAN DIAMETER OF THE LARGER CONDUIT IN THE SAME HORIZONTAL PLAN.
5. SUPPORT CONDUITS AT CROSSING TO PREVENT SAG AND MAINTAIN CLEARANCE SHOWN.
6. WHERE MORE THAN 2 RUNS ARE STACKED, PROVIDE HORIZONTAL AND VERTICAL SPACING SHOWN BETWEEN EACH PAIR.

EM117 TYP S — EMBEDDED CONDUIT IN CONCRETE SLAB CROSSING RUNS

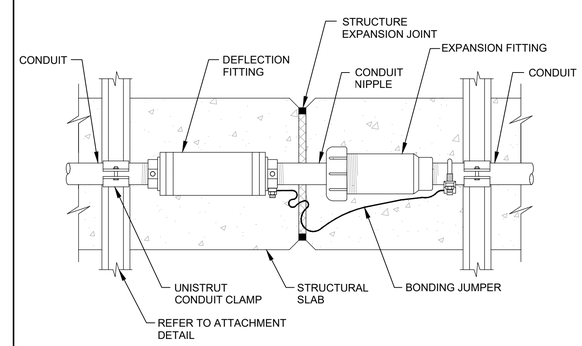

GENERAL NOTES:

1. WHERE SEVERAL CONDUITS ARE INSTALLED, FITTINGS MAY BE STAGGERED, BUT IN NO CASE SHALL A FITTING BE MORE THAN 3'-0" FROM THE EXPANSION JOINT.

EM126 TYP S — EXPOSED EXPANSION/DEFLECTION FITTING AT CONCRETE WALL EXPANSION JOINT

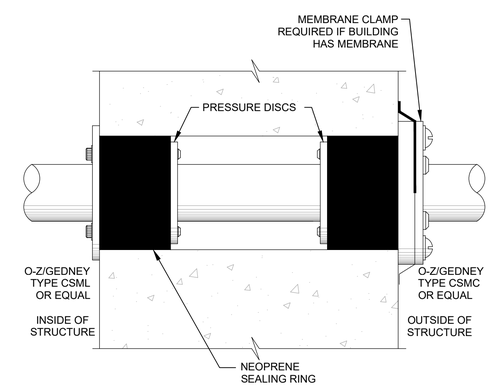

GENERAL NOTES:

1. REFER TO SPECIFICATIONS FOR CORE-DRILLING REQUIREMENTS.

EM133 TYP S — CONDUIT WALL PENETRATION BELOW GRADE

REV	DATE	BY	DESCRIPTION
			BID SET

DESIGNED CE
DRAWN CE
CHECKED GCE
DATE FEBRUARY 2025

REGISTERED PROFESSIONAL ENGINEER No. 5329023 GUY C. EHLERS STATE OF UTAH

carollo

JORDAN VALLEY WATER CONSERVANCY DISTRICT

JORDAN VALLEY WATER TREATMENT PLANT
FILTER AND CHEMICAL FEED UPGRADES
ELECTRICAL
TYPICAL DETAILS 6

VERIFY SCALES
BAR IS ONE INCH ON ORIGINAL DRAWING
0 1"
IF NOT ONE INCH ON THIS SHEET, ADJUST SCALES ACCORDINGLY

JOB NO. 202001.10
DRAWING NO. 00GE08
SHEET NO. 281 OF 531

Plot Date: 9/12/2022 7:29:07 AM
LAST SAVED BY: jdbriones

PROJECT NO. 202001-100000 FILE NAME: 20200100GE08.dwg

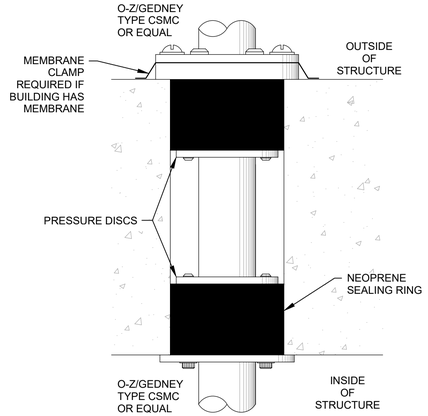

EM136 TYP S — CORE HOLE CONDUIT FLOOR PENETRATION

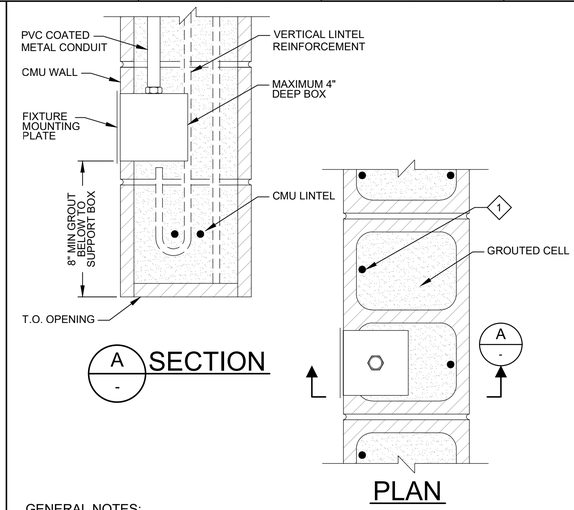

GENERAL NOTES:

1. REFER TO STRUCTURAL DRAWING FOR ADDITIONAL GROUT AND REINFORCEMENT REQUIREMENTS.
2. REFER TO STRUCTURAL DRAWINGS FOR REINFORCEMENT IN WALLS AND LINTELS.

KEY NOTES:

1. DISCONTINUE VERTICAL BAR AT BOX. PROVIDE VERTICAL BARS IN CELLS NEXT TO BOX.

EM171 TYP S — ELECTRICAL BOX ABOVE OPENING FULLY GROUTED CMU WALL

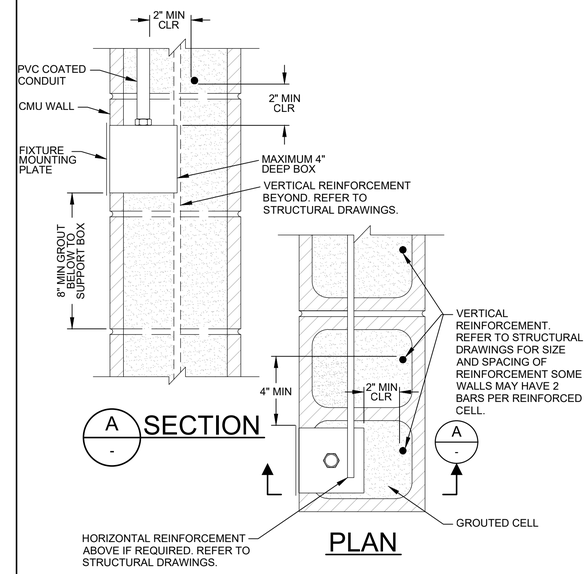

GENERAL NOTES:

1. REFER TO STRUCTURAL DRAWING FOR ADDITIONAL GROUT AND REINFORCEMENT REQUIREMENTS.

EM172 TYP S — ELECTRICAL BOX BESIDE OPENING FULLY GROUTED CMU WALL

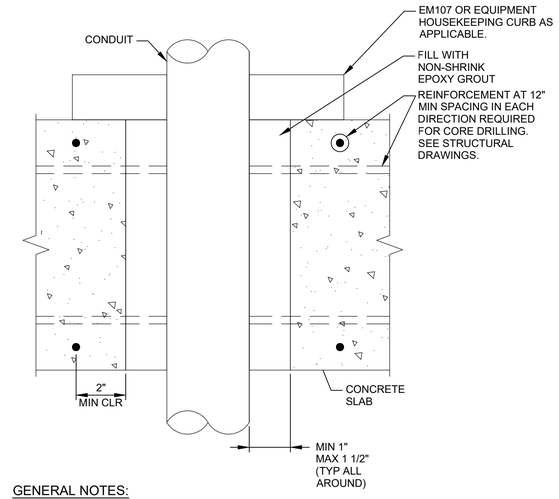

GENERAL NOTES:

1. PROVIDE NON-DESTRUCTIVE TESTING TO DETERMINE LOCATIONS OF REINFORCEMENT. MAINTAIN MIN 2" CLEAR BETWEEN CORE DRILLED OPENING AND REINFORCEMENT.
2. APPLY EPOXY CEMENT BONDING AGENT PRIOR TO GROUTING.

EM139 TYP S — CORE DRILLED PENETRATION CONCRETE SLAB

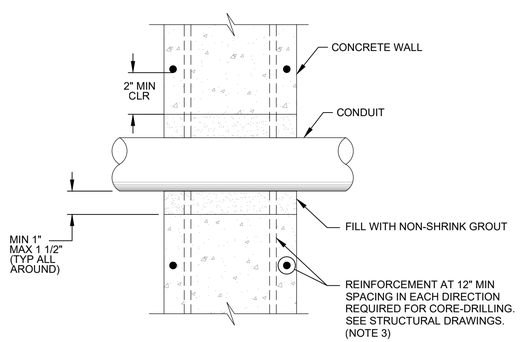

GENERAL NOTES:

1. PROVIDE NON-DESTRUCTIVE TESTING TO DETERMINE LOCATIONS OF REINFORCEMENT. MAINTAIN MIN 2" CLEAR BETWEEN CORE DRILLED OPENING AND REINFORCEMENT.
2. APPLY EPOXY CEMENT BONDING AGENT OR ROUGHEN CONCRETE SURFACE PRIOR TO GROUTING.
3. PROVIDE CAST-IN SLEEVE FOR PENETRATIONS IN WALLS WITH REINFORCEMENT SPACING LESS THAN 2" IN EACH DIRECTION. REFER TO STRUCTURAL DRAWINGS.

EM163 TYP S — CORE DRILLED PENETRATION CONCRETE WALL

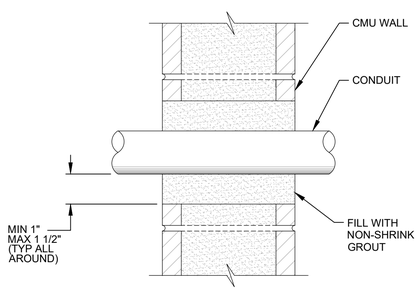

GENERAL NOTES:

1. PROVIDE NON-DESTRUCTIVE TESTING TO DETERMINE LOCATIONS OF REINFORCEMENT. MAINTAIN MIN 2" CLEAR BETWEEN CORE DRILLED OPENING AND REINFORCEMENT.
2. ROUGHEN SURFACE OF OPENING TO A 1/4" AMPLITUDE AND APPLY EPOXY CEMENT BONDING AGENT IMMEDIATELY PRIOR TO GROUTING.
3. PROVIDE 8" MINIMUM CENTER-TO-CENTER SPACING FOR CONDUITS.

EM173 TYP S — CORE HOLE PENETRATION FULLY GROUTED CMU WALL

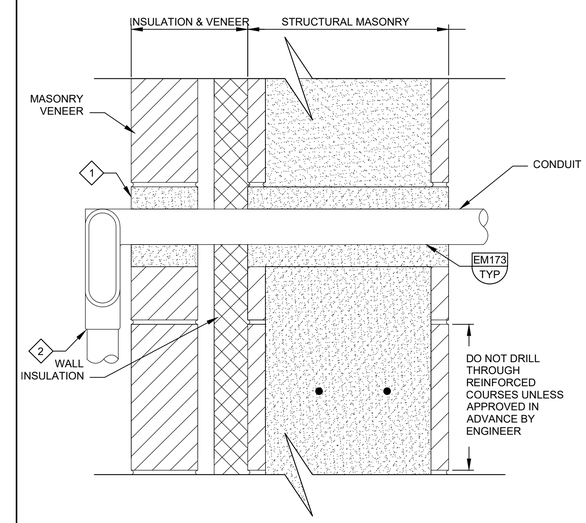

KEY NOTES:

1. NON-SHRINK GROUT COLORED TO MATCH THE MASONRY VENEER.
2. USE I-HOLE STRAPS AND CLAMPS TO SECURE THE CONDUIT TO THE MASONRY VENEER.

EM192 TYP S — CONDUIT PENETRATION THROUGH MASONRY CAVITY WALL

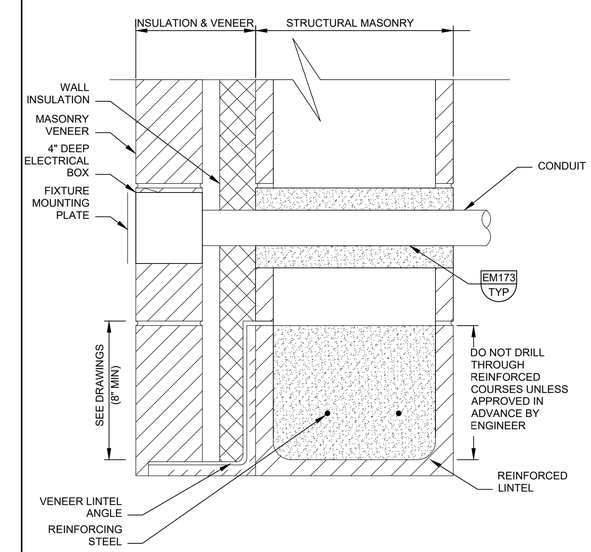

EM193 TYP S — ELECTRICAL BOX ABOVE DOOR IN CAVITY WALL

REV	DATE	BY	DESCRIPTION
			BID SET

DESIGNED CE
DRAWN CE
CHECKED GCE
DATE FEBRUARY 2025

REGISTERED PROFESSIONAL ENGINEER No. 5329023 GUY C. EHLERS STATE OF UTAH

carollo

JORDAN VALLEY WATER CONSERVANCY DISTRICT

JORDAN VALLEY WATER TREATMENT PLANT
FILTER AND CHEMICAL FEED UPGRADES
ELECTRICAL
TYPICAL DETAILS 7

VERIFY SCALES
BAR IS ONE INCH ON ORIGINAL DRAWING
0 1"
IF NOT ONE INCH ON THIS SHEET, ADJUST SCALES ACCORDINGLY

JOB NO. 202001.10
DRAWING NO. 00GE09
SHEET NO. 282 OF 531

Plot Date: 9/12/2022 7:29:07 AM
LAST SAVED BY: jdbriones
PROJECT NO. 202001-100000 FILE NAME: 20200100GE09.dwg

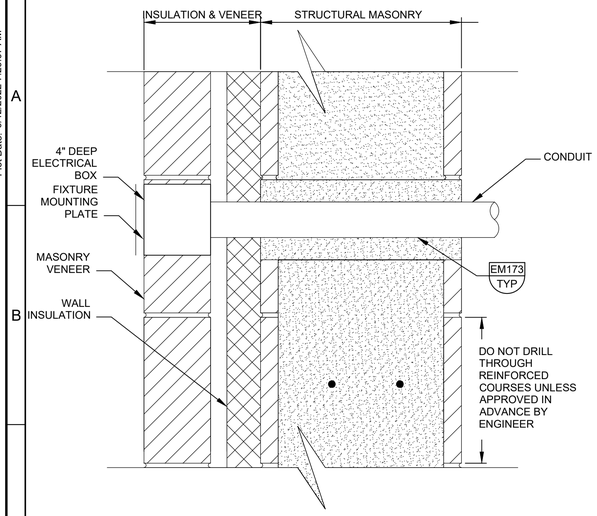

EM191 TYP S ELECTRICAL BOX IN MASONRY CAVITY WALL

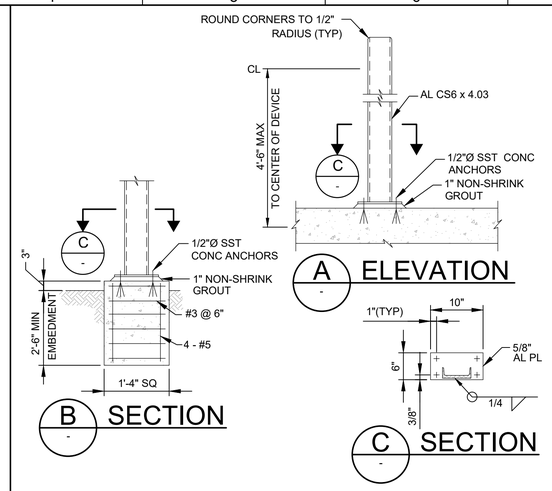

GENERAL NOTES:

1. WHERE SEPARATE FOUNDATION IS REQUIRED, SEE SECTION B.
2. COAT ALUMINUM SURFACES IN CONTACT WITH CONCRETE PER SPECIFICATIONS.
3. USE STAINLESS STEEL FASTENERS FOR MOUNTING DEVICES.
4. WEIGHT OF DEVICE(S) SHALL NOT EXCEED 100 POUNDS.

EM201 TYP S DEVICE SUPPORT AND MOUNTING

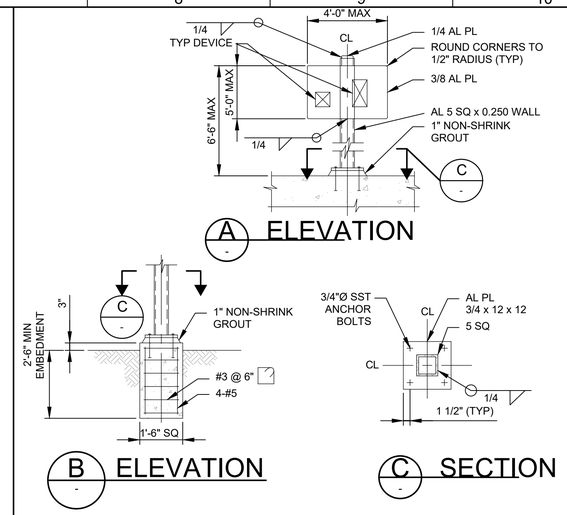

GENERAL NOTES:

1. USE ELEVATION B WHERE A SEPARATE FOUNDATION IS REQUIRED.
2. COAT ALUMINUM SURFACES IN CONTACT W/ CONCRETE PER SPECIFICATIONS.
3. USE STAINLESS STEEL FASTENERS FOR MOUNTING DEVICES.
4. WEIGHT OF DEVICE(S) SHALL NOT EXCEED 300 POUNDS.

EM202 TYP S DEVICE SUPPORT AND MOUNTING

REV	DATE	BY	DESCRIPTION
			BID SET

DESIGNED CE
DRAWN CE
CHECKED GCE
DATE FEBRUARY 2025

REGISTERED PROFESSIONAL ENGINEER No. 5329023 GUY C. EHLERS STATE OF UTAH

carollo

JORDAN VALLEY WATER CONSERVANCY DISTRICT

JORDAN VALLEY WATER TREATMENT PLANT
FILTER AND CHEMICAL FEED UPGRADES
ELECTRICAL
TYPICAL DETAILS 8

VERIFY SCALES
BAR IS ONE INCH ON ORIGINAL DRAWING
0 1"
IF NOT ONE INCH ON THIS SHEET, ADJUST SCALES ACCORDINGLY

JOB NO. 202001.10
DRAWING NO. 00GE10
SHEET NO. 283 OF 531

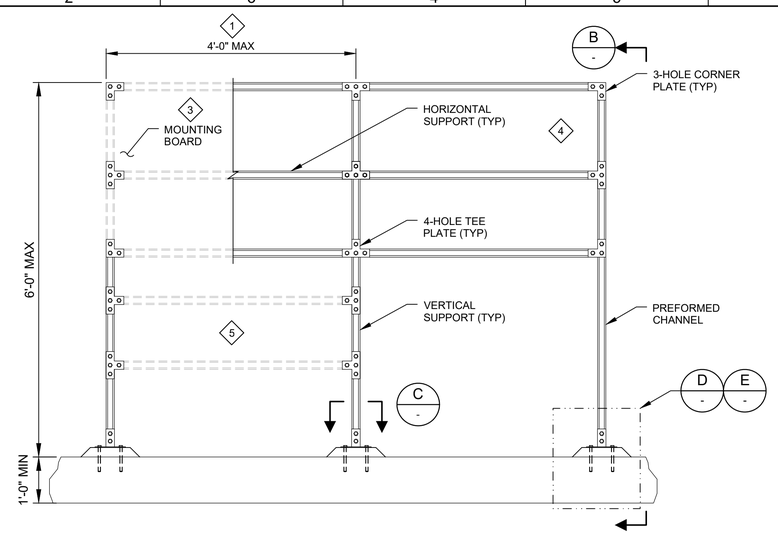

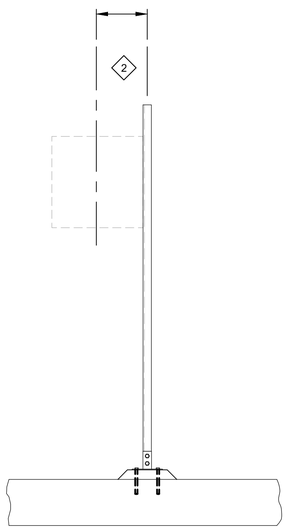

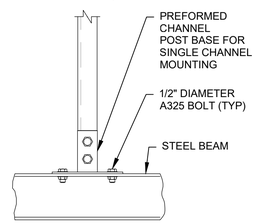

D POST MOUNTED ON STEEL BEAM

SCALE:
FILE:

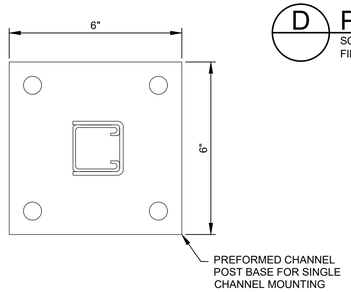

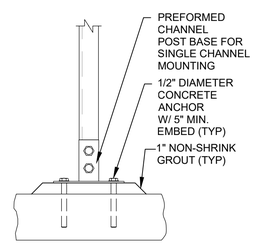

B SECTION

C POST BASE

SCALE:
FILE:

E POST MOUNTED ON CONCRETE

SCALE:
FILE:

GENERAL NOTES:

1. AS SHOWN, THE MOUNTING STAND IS SUITABLE FOR THE FOLLOWING DESIGN CRITERIA.
   - STAINLESS STEEL OR HOT-DIPPED GALVANIZED PREFORMED CHANNEL
   - SEISMIC DESIGN CATEGORY: A THROUGH D
   - RISK CATEGORY: III AND IV
   - MAXIMUM EQUIPMENT LOAD OF 100 LBS PER VERTICAL SUPPORT

   SUBMIT DESIGN CALCULATIONS FOR EACH INSTALLATION THAT EXCEEDS THE SPECIFIED DESIGN CRITERIA OR DIMENSIONAL LIMITATIONS IN THIS DETAIL. REFER TO THE SPECIFICATIONS FOR DESIGN CALCULATION SUBMITTAL REQUIREMENTS
2. REFER TO THE SPECIFICATIONS FOR MATERIAL REQUIREMENTS.
3. WHERE CONCRETE ANCHORS COME IN CONTACT WITH DISSIMILAR METALS, ISOLATE DISSIMILAR METALS AS SPECIFIED IN THE SPECIFICATIONS.
4. HORIZONTAL AND VERTICAL SUPPORTS SHALL CONSIST OF PREFORMED SINGLE CHANNELS.

KEY NOTES:

1. FOR MOUNTING STANDS WIDER THAN 4 FEET PROVIDE EQUALLY SPACED VERTICAL SUPPORTS AT 4 FOOT MAXIMUM SPACING.
2. MAXIMUM OFFSET TO THE CENTERLINE OF EQUIPMENT OR ENCLOSURES IS 1'-6".
3. PROVIDE A MOUNTING BOARD FOR INSTRUMENTS AND DEVICES WEIGHING LESS THAN 20 POUNDS THAT CANNOT BE MOUNTED DIRECTLY TO PREFORMED CHANNEL. EQUIPMENT ANCHORAGE TO THE MOUNTING BOARD SHALL BE DESIGNED BY THE CONTRACTOR.
4. PROVIDE ADDITIONAL PREFORMED CHANNEL SUPPORTS FOR ENCLOSURES THAT CAN BE MOUNTED DIRECTLY TO THE PREFORMED CHANNEL.
5. OPTIONAL HORIZONTAL SUPPORTS AND AVAILABLE SPACE FOR JUNCTION BOXES.

EM210 TYP S INDOOR EQUIPMENT MOUNTING STAND

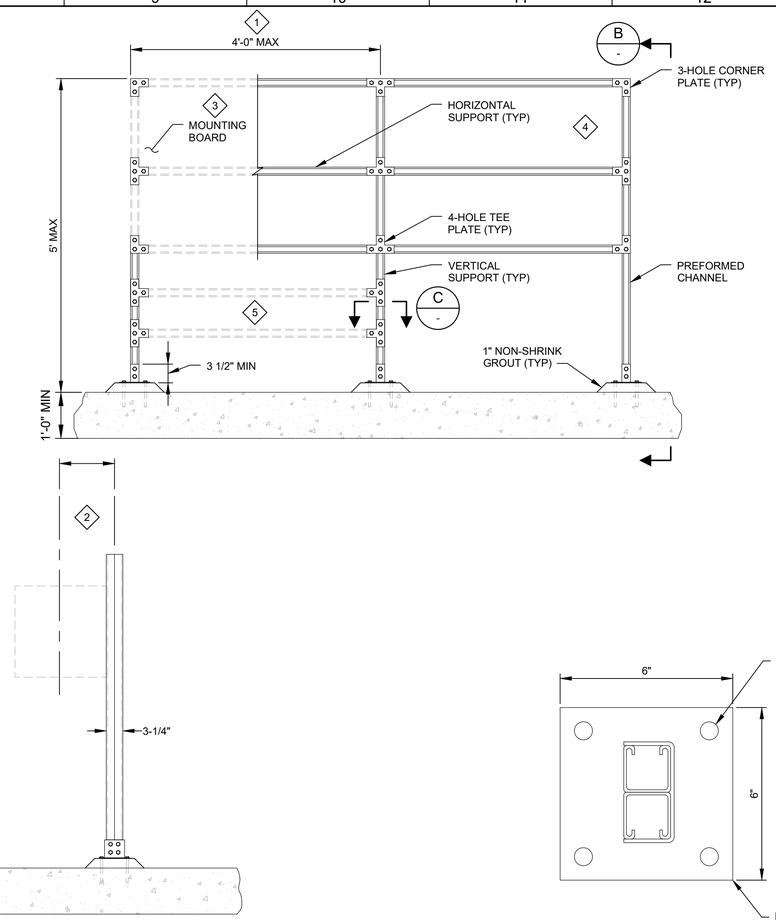

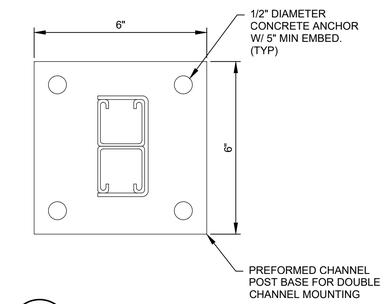

B SECTION

C POST BASE

SCALE:
FILE:

GENERAL NOTES:

1. AS SHOWN, THE MOUNTING STAND IS SUITABLE FOR THE FOLLOWING DESIGN CRITERIA.
   - STAINLESS STEEL OR HOT-DIPPED GALVANIZED PREFORMED CHANNEL
   - BASIC WIND SPEED (3 SECOND GUST. 33 FEET ABOVE GROUND) : 120 MPH
   - WIND EXPOSURE CATEGORY: C
   - NON -SPECIAL WIND REGIONS
   - SEISMIC DESIGN CATEGORY: A THROUGH D
   - RISK CATEGORY: III AND IV
   - MAXIMUM EQUIPMENT LOAD OF 100 LBS PER VERTICAL SUPPORT

   SUBMIT DESIGN CALCULATIONS FOR EACH INSTALLATION THAT EXCEEDS THE SPECIFIED DESIGN CRITERIA OR DIMENSIONAL LIMITATIONS IN THIS DETAIL. REFER TO THE SPECIFICATIONS FOR DESIGN CALCULATION SUBMITTAL REQUIREMENTS.
2. THE TOTAL SURFACE AREA OF ALL EQUIPMENT AND MOUNTING BOARDS SHALL NOT EXCEED 12 SQUARE FEET PER VERTICAL SUPPORT.
3. REFER TO THE SPECIFICATIONS FOR MATERIAL REQUIREMENTS.
4. WHERE CONCRETE ANCHORS COME IN CONTACT WITH DISSIMILAR METALS, ISOLATE DISSIMILAR METALS AS SPECIFIED IN THE SPECIFICATIONS.
5. VERTICAL SUPPORTS SHALL CONSIST OF PREFORMED DOUBLE CHANNELS. HORIZONTAL SUPPORTS SHALL CONSIST OF PREFORMED SINGLE CHANNELS.

KEY NOTES:

1. FOR MOUNTING STANDS WIDER THAN 4 FEET PROVIDE EQUALLY SPACED VERTICAL SUPPORTS AT 4 FOOT MAXIMUM SPACING.
2. MAXIMUM OFFSET TO THE CENTERLINE OF EQUIPMENT OR ENCLOSURES IS 1'-6".
3. PROVIDE A MOUNTING BOARD FOR INSTRUMENTS AND DEVICES WEIGHING LESS THAN 20 POUNDS THAT CANNOT BE MOUNTED DIRECTLY TO PREFORMED CHANNEL. EQUIPMENT ANCHORAGE TO THE MOUNTING BOARD SHALL BE DESIGNED BY THE CONTRACTOR.
4. PROVIDE ADDITIONAL PREFORMED CHANNEL SUPPORTS FOR ENCLOSURES THAT CAN BE MOUNTED DIRECTLY TO THE PREFORMED CHANNEL.
5. OPTIONAL HORIZONTAL SUPPORTS AND AVAILABLE SPACE FOR JUNCTION BOXES.

EM211 TYP S OUTDOOR EQUIPMENT MOUNTING STAND

REV	DATE	BY	DESCRIPTION
			BID SET

DESIGNED CE
DRAWN CE
CHECKED GCE
DATE FEBRUARY 2025

REGISTERED PROFESSIONAL ENGINEER No. 5329023 GUY C. EHLERS STATE OF UTAH

carollo

JORDAN VALLEY WATER CONSERVANCY DISTRICT

JORDAN VALLEY WATER TREATMENT PLANT
FILTER AND CHEMICAL FEED UPGRADES
ELECTRICAL
TYPICAL DETAILS 9

VERIFY SCALES
BAR IS ONE INCH ON ORIGINAL DRAWING
0 1"
IF NOT ONE INCH ON THIS SHEET, ADJUST SCALES ACCORDINGLY

JOB NO. 202001.10
DRAWING NO. 00GE11
SHEET NO. 284 OF 531

Plot Date: 9/12/2022 7:29:07 AM
LAST SAVED BY: jdbriones
PROJECT NO. 202001-100000 FILE NAME: 20200100GE11.dwg

GENERAL NOTES:

1. AS SHOWN, THE MOUNTING STAND IS SUITABLE FOR THE FOLLOWING DESIGN CRITERIA:
   - BASIC WIND SPEED (3 SECOND GUST, 33 FEET ABOVE GROUND) : 145 MPH
   - WIND EXPOSURE CATEGORY: D
   - NON-SPECIAL WIND REGIONS.
   - SEISMIC DESIGN CATEGORY: A, THROUGH D
   - RISK CATEGORY: III
   - MAXIMUM DEAD LOAD OF 200 LBS. SUBMIT DESIGN CALCULATIONS FOR EACH INSTALLATION THAT EXCEEDS THE SPECIFIED DESIGN CRITERIA. REFER TO THE SPECIFICATION FOR DESIGN CALCULATION SUBMITTAL REQUIREMENTS.
2. REFER TO THE SPECIFICATIONS FOR MATERIAL REQUIREMENTS.
3. PROVIDE ADDITIONAL SUPPORTS FOR ENCLOSURES THAT CAN BE MOUNTED DIRECTLY TO THE PREFORMED CHANNEL. USE STANDARD 4-HOLE TEE PLATES TO CONNECT TO THE MOUNTING STAND.
4. LOCATE EXISTING REINFORCEMENT PRIOR TO DRILLING FOR ADHESIVE ANCHORS.
5. COORDINATE MOUNTING LOCATION WITH GUARDRAIL POSTS WHEN USING SIDE MOUNTED POSTS.

KEY NOTES:

1. PROVIDE A MOUNTING BOARD FOR INSTRUMENTS AND DEVICES WEIGHING LESS THAN 20 POUNDS THAT CANNOT BE MOUNTED DIRECTLY TO PREFORMED CHANNEL. EQUIPMENT ANCHORAGE TO THE MOUNTING BOARD TO BE DESIGNED BY THE CONTRACTOR. PROVIDE A PREFORMED CHANNEL BRACE BEHIND THE MOUNTING BOARD IF REQUIRED.
2. PROVIDE ADDITIONAL PREFORMED CHANNEL SUPPORTS FOR ENCLOSURES THAT CAN BE MOUNTED DIRECTLY TO THE PREFORMED CHANNEL, WHERE REQUIRED.

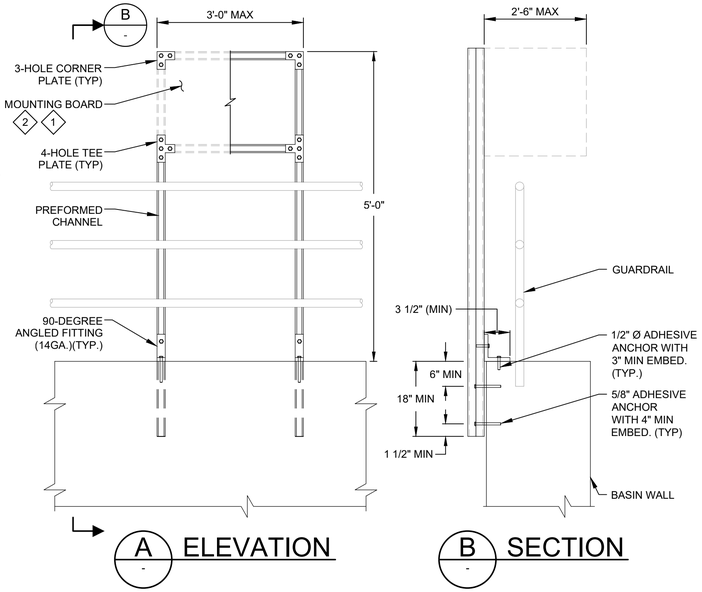

A - ELEVATION

B - SECTION

EM212 TYP — EQUIPMENT MOUNTING STAND ON CONCRETE BASIN

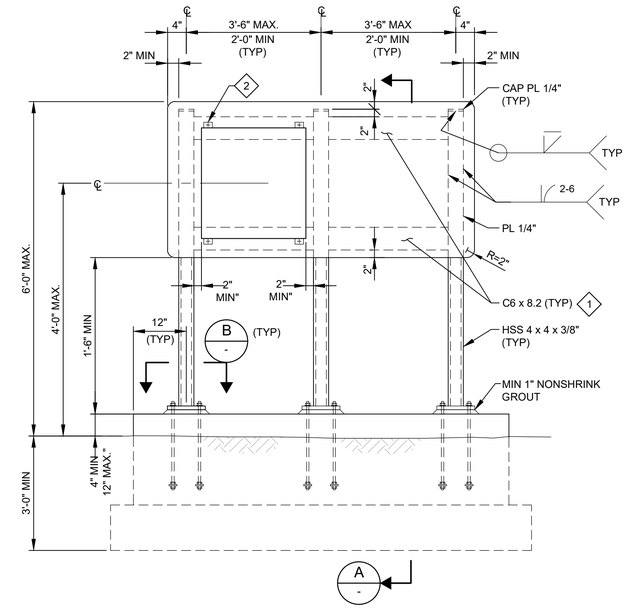

GENERAL NOTES:

1. REFER TO THE STRUCTURAL DRAWINGS FOR PAD DETAILS.
2. SEE SC001/TYP FOR CONCRETE COVER AND REINFORCEMENT NOTES.

KEY NOTES:

1. PROVIDE HORIZONTAL CHANNEL STIFFENER AT TOP AND BOTTOM AS SHOWN. ADD INTERMEDIATE CHANNELS AT MOUNTING LOCATIONS WHERE EQUIPMENT WEIGHT EXCEEDS 200 LB.
2. MOUNT CABINETS/EQUIPMENT TO PLATE. FOR EQUIPMENT WEIGHTS EXCEEDING 200 LBS, MOUNTING BOLTS TO EXTEND THROUGH PLATE AND HORIZONTAL CHANNELS ON BACK, PER NOTE 2.
3. ALL REINFORCEMENT #4 @ 8" OC UNLESS NOTED OTHERWISE.

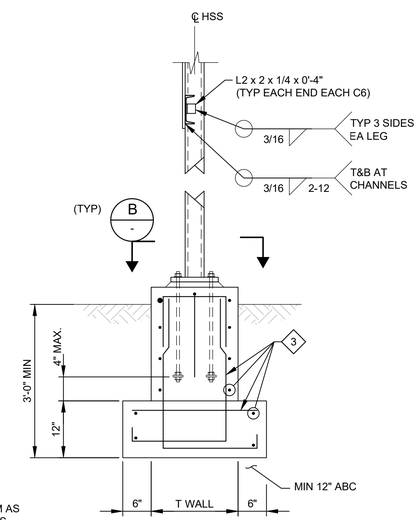

A - DETAIL

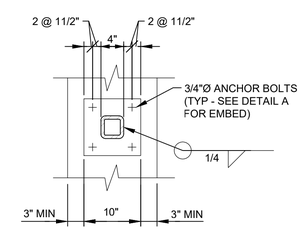

B - DETAIL

EM216 TYP — EQUIPMENT MOUNTING STAND

REV	DATE	BY	DESCRIPTION
			BID SET

DESIGNED CE
DRAWN CE
CHECKED GCE
DATE FEBRUARY 2025

REGISTERED PROFESSIONAL ENGINEER No. 5329023 GUY C. EHLERS STATE OF UTAH

carollo

JORDAN VALLEY WATER CONSERVANCY DISTRICT

JORDAN VALLEY WATER TREATMENT PLANT
FILTER AND CHEMICAL FEED UPGRADES
ELECTRICAL
TYPICAL DETAILS 10

VERIFY SCALES
BAR IS ONE INCH ON ORIGINAL DRAWING
0 1"
IF NOT ONE INCH ON THIS SHEET, ADJUST SCALES ACCORDINGLY

JOB NO. 202001.10
DRAWING NO. 00GE12
SHEET NO. 285 OF 531

Plot Date: 9/12/2022 7:29:07 AM
LAST SAVED BY: jdbriones
PROJECT NO. 202001-100000 FILE NAME: 20200100GE12.dwg

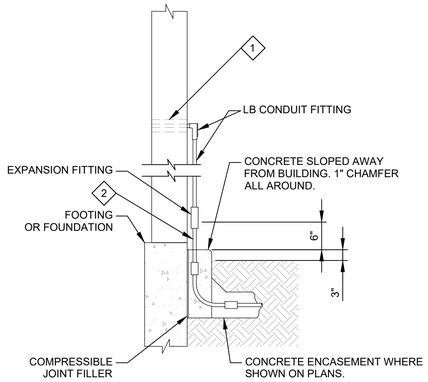

GENERAL NOTES:

1. REFER TO THE SPECIFICATIONS FOR MATERIAL REQUIREMENTS.

KEY NOTES:

1. USE THE WALL PENETRATION DETAIL SUITABLE FOR THE WALL CONSTRUCTION.
2. DO NOT ATTACH THE CONDUIT TO THE BUILDING BEFORE THE EXPANSION FITTING.

EM219 TYP — DUCT BANK RISER ADJACENT TO BUILDING

10/15/22

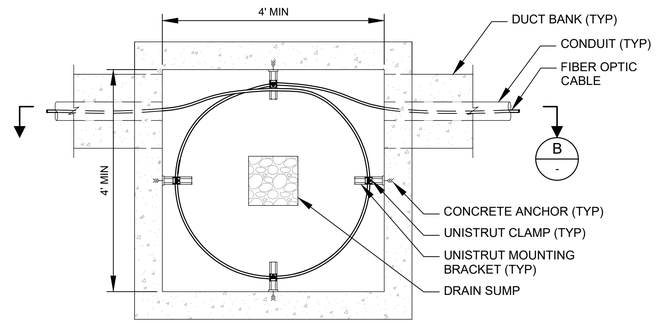

A - PLAN

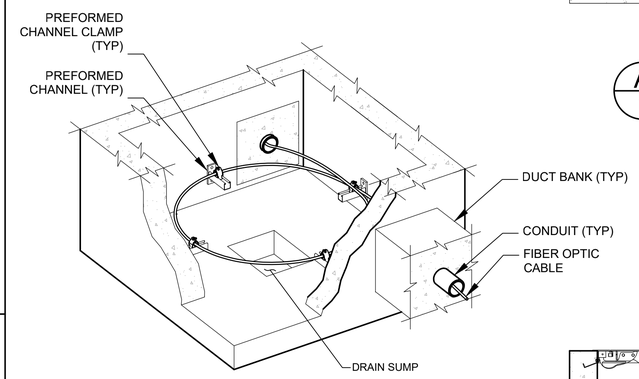

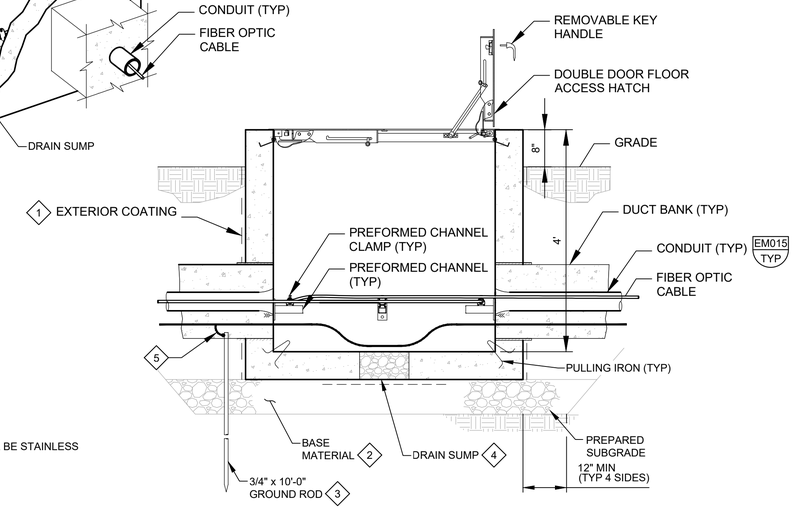

GENERAL NOTES:

1. ALL PREFORMED CHANNEL AND HARDWARE SHALL BE STAINLESS STEEL.

KEY NOTES:

1. COAT EXTERIOR WALLS BELOW GRADE WITH BITUMINOUS DAMPPROOFING.
2. BASE MATERIAL: PROVIDE MIN 12" COMPACTED AGGREGATE BASE COURSE.
3. BOND DUCT BANK GROUND CABLE TO GROUND ROD. REFER TO THE SPECIFICATIONS FOR CONNECTION REQUIREMENTS.
4. PROVIDE MINIMUM 4 INCH DIAMETER, GRAVEL FILLED PENETRATION THROUGH FLOOR OF HANDHOLE. SET SUMP OPENING OVER MINIMUM 18" SQUARE FILTER FABRIC TO ISOLATE GRAVEL FROM BASE MATERIAL BELOW.
5. GROUNDING CABLE CONNECTION. REFER TO THE SPECIFICATIONS FOR CONNECTION REQUIREMENTS.

B - SECTION

EM251 TYP R — PRECAST VAULT WITH HATCH FIBER LOOP

01/23/25

GENERAL NOTES:

1. AS SHOWN, THE MOUNTING STAND IS SUITABLE FOR THE FOLLOWING DESIGN CRITERIA:
   - BASIC WIND SPEED (3 SECOND GUST, 33 FEET ABOVE GROUND) : 145 MPH
   - WIND EXPOSURE CATEGORY: D
   - NON-SPECIAL WIND REGIONS.
   - SEISMIC DESIGN CATEGORY: A, THROUGH D
   - RISK CATEGORY: III
   - MAXIMUM DEAD LOAD OF 200 LBS. SUBMIT DESIGN CALCULATIONS FOR EACH INSTALLATION THAT EXCEEDS THE SPECIFIED DESIGN CRITERIA. REFER TO THE SPECIFICATION FOR DESIGN CALCULATION SUBMITTAL REQUIREMENTS.
2. REFER TO THE SPECIFICATIONS FOR MATERIAL REQUIREMENTS.
3. PROVIDE ADDITIONAL SUPPORTS FOR ENCLOSURES THAT CAN BE MOUNTED DIRECTLY TO THE PREFORMED CHANNEL. USE STANDARD 4-HOLE TEE PLATES TO CONNECT TO THE MOUNTING STAND.
4. LOCATE EXISTING REINFORCEMENT PRIOR TO DRILLING FOR ADHESIVE ANCHORS.
5. COORDINATE MOUNTING LOCATION WITH GUARDRAIL POSTS WHEN USING SIDE MOUNTED POSTS.

KEY NOTES:

1. PROVIDE A MOUNTING BOARD FOR INSTRUMENTS AND DEVICES WEIGHING LESS THAN 20 POUNDS THAT CANNOT BE MOUNTED DIRECTLY TO PREFORMED CHANNEL. EQUIPMENT ANCHORAGE TO THE MOUNTING BOARD TO BE DESIGNED BY THE CONTRACTOR. PROVIDE A PREFORMED CHANNEL BRACE BEHIND THE MOUNTING BOARD IF REQUIRED.
2. PROVIDE ADDITIONAL PREFORMED CHANNEL SUPPORTS FOR ENCLOSURES THAT CAN BE MOUNTED DIRECTLY TO THE PREFORMED CHANNEL, WHERE REQUIRED.

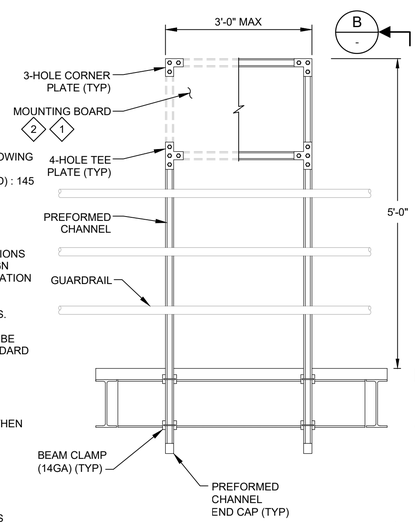

A - ELEVATION

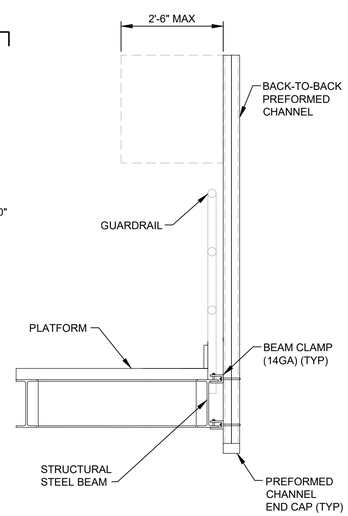

B - SECTION

EM214 TYP — EQUIPMENT MOUNTING STAND ON PLATFORM

REV	DATE	BY	DESCRIPTION
			BID SET

DESIGNED CE
DRAWN CE
CHECKED GCE
DATE FEBRUARY 2025

REGISTERED PROFESSIONAL ENGINEER No. 5329023 GUY C. EHLERS STATE OF UTAH

carollo

JORDAN VALLEY WATER CONSERVANCY DISTRICT

JORDAN VALLEY WATER TREATMENT PLANT
FILTER AND CHEMICAL FEED UPGRADES
ELECTRICAL
TYPICAL DETAILS 11

VERIFY SCALES
BAR IS ONE INCH ON ORIGINAL DRAWING
0 1"
IF NOT ONE INCH ON THIS SHEET, ADJUST SCALES ACCORDINGLY

JOB NO. 202001.10
DRAWING NO. 00GE13
SHEET NO. 286 OF 531

Plot Date: 9/12/2022 7:29:07 AM
LAST SAVED BY: dscheele

PROJECT NO. 202001-100000 FILE NAME: 20200100GE13.dwg

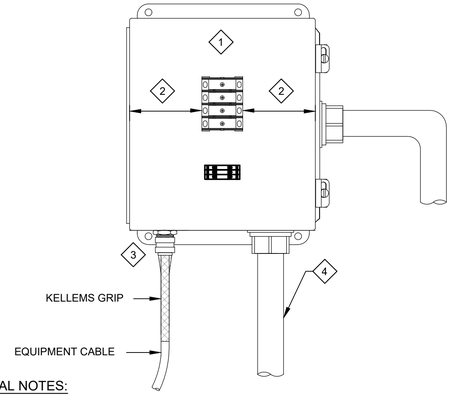

GENERAL NOTES:

1. REFER TO THE SPECIFICATIONS FOR ENCLOSURE AND MATERIAL REQUIREMENTS.
2. PROVIDE A BACK PANEL AND DIN RAIL FOR MOUNTING THE POWER AND CONTROL BLOCKS.
3. DO NOT MAKE CONDUIT CONNECTIONS TO THE TOP OF NEMA 4X ENCLOSURES.

KEY NOTES:

1. LISTED POWER TERMINAL BLOCKS WITH SAFETY COVER.
2. PROVIDE CLEARANCE IN ACCORDANCE WITH THE NEC.
3. THE EQUIPMENT CABLE MAY BE ROUTED IN CONDUIT FROM THE WET WELL. REFER TO THE DRAWINGS.
4. PROVIDE CONDUIT SEALS ON THE BUILDING WIRE SIDE OF THE JUNCTION BOX AS REQUIRED.

EM315 TYP — SUBMERSIBLE EQUIPMENT CABLE CONNECTION DETAIL

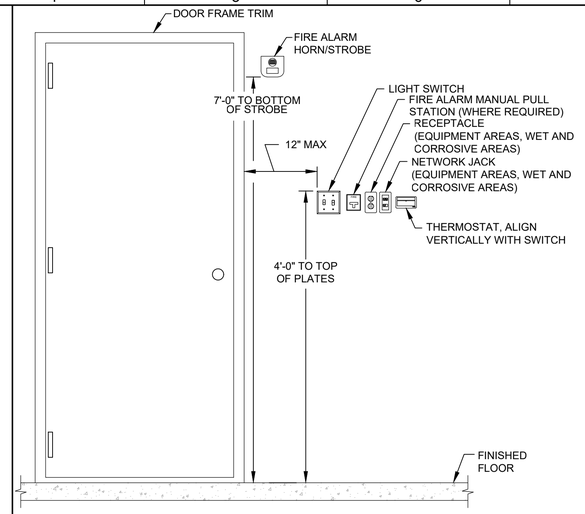

GENERAL NOTES:

1. ALL SWITCHES AND RECEPTACLES SHALL BE EMBEDDED IN THE WALL UNLESS OTHERWISE INDICATED ON THE DRAWINGS.

EM725 TYP — OUTLET BOX MOUNTING

R 01/23/25

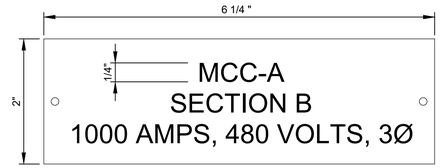

OVERALL ELECTRICAL EQUIPMENT

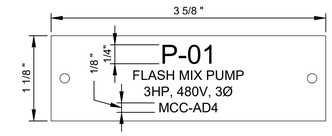

STARTER OR CIRCUIT BREAKER COMPARTMENT

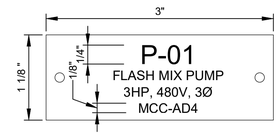

DISCONNECT, LOCAL CONTROL PANEL

GENERAL NOTES:

1. REFER TO THE SPECIFICATIONS FOR MATERIALS AND COLOR SCHEMES.
2. NAMEPLATE DIMENSIONS ARE APPROXIMATE.

EN001 TYP — TYPICAL ELECTRICAL EQUIPMENT NAMEPLATES

S

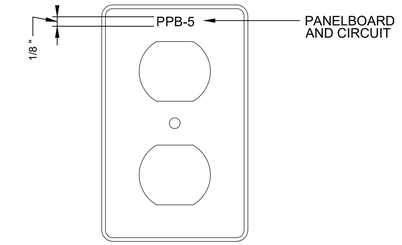

RECEPTACLE

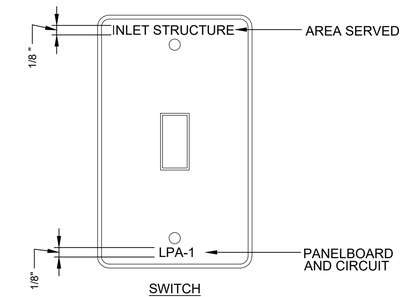

SWITCH

GENERAL NOTES:

1. ENGRAVE CIRCUIT DESIGNATION DIRECTLY ONTO DEVICE COVER PLATE. FILL LETTERING WITH BLACK ENAMEL.

EN002 TYP — TYPICAL PLATE IDENTIFICATION

S

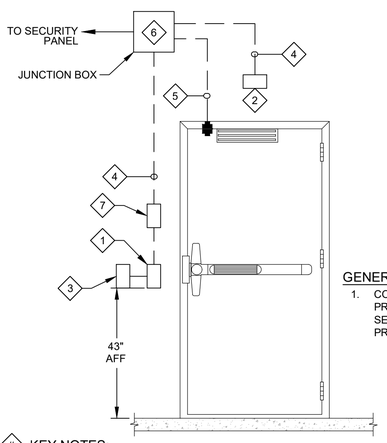

GENERAL NOTES:

1. CONDUIT AND JUNCTION BOXES PROVIDED UNDER DIVISION 16. SECURITY DEVICES AND WIRING PROVIDED BY OTHERS.

KEY NOTES:

1. EMBEDDED SINGLE GANG BOX FOR CARD READER. INSTALL FLUSH WITH EXTERIOR WALL.
2. EMBEDDED SINGLE GANG BOX ON SECURE SIDE FOR REQUEST-TO-EXIT MOTION DETECTOR.
3. EMBEDDED SINGLE GANG BOX ON SECURE SIDE FOR PUSH-TO-EXIT BUTTON.
4. 3/4" CONDUIT.
5. 3/4" CONDUIT STUBBED INTO DOOR FRAME FOR MAGNETIC LOCK ON SECURE SIDE.
6. MOUNT WITHIN 10" OF DOOR FRAME.
7. EMBEDDED SINGLE GANG BOX FOR OVERRIDE SWITCH (WHERE REQUIRED ON THE DRAWINGS). INSTALL FLUSH WITH EXTERIOR WALL.

ES91B TYP — SINGLE DOOR SECURITY WITH CARD READER

R 01/23/25

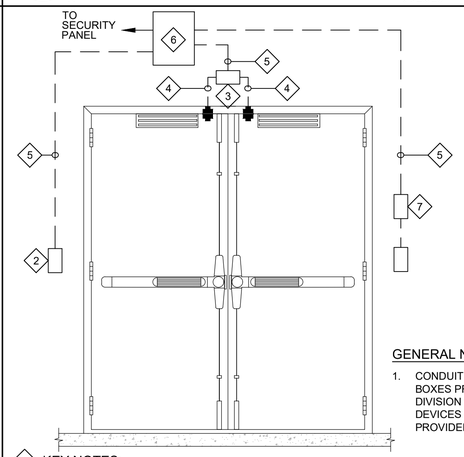

GENERAL NOTES:

1. CONDUIT AND JUNCTION BOXES PROVIDED UNDER DIVISION 16. SECURITY DEVICES AND WIRING PROVIDED BY OTHERS.

KEY NOTES:

1. EMBEDDED SINGLE GANG BOX FOR CARD READER. INSTALL FLUSH WITH EXTERIOR WALL.
2. EMBEDDED SINGLE GANG BOX ON SECURE SIDE FOR PUSH-TO-EXIT BUTTON.
3. EMBEDDED SINGLE GANG BOX ON SECURE SIDE FOR REQUEST-TO-EXIT MOTION DETECTOR.
4. 3/4" CONDUIT STUBBED INTO DOOR FRAME FOR MAGNETIC LOCK ON SECURE SIDE.
5. 3/4" EMBEDDED CONDUIT.
6. MOUNT WITHIN 10" OF DOOR FRAME.
7. EMBEDDED SINGLE GAG BOX FOR OVERRIDE SWITCH (WHERE REQUIRED ON THE DRAWINGS). INSTALL FLUSH WITH EXTERIOR WALL.

ES92B TYP — DOUBLE DOOR SECURITY WITH CARD READER

J 01/23/25

REV	DATE	BY	DESCRIPTION
			BID SET

DESIGNED CE
DRAWN CE
CHECKED GCE
DATE FEBRUARY 2025

REGISTERED PROFESSIONAL ENGINEER No. 5329023 GUY C. EHLERS STATE OF UTAH

carollo

JORDAN VALLEY WATER CONSERVANCY DISTRICT

JORDAN VALLEY WATER TREATMENT PLANT
FILTER AND CHEMICAL FEED UPGRADES
ELECTRICAL
TYPICAL DETAILS 12

VERIFY SCALES
BAR IS ONE INCH ON ORIGINAL DRAWING
0 1"
IF NOT ONE INCH ON THIS SHEET, ADJUST SCALES ACCORDINGLY

JOB NO. 202001.10
DRAWING NO. 00GE14
SHEET NO. 287 OF 531

Plot Date: 9/12/2022 7:29:07 AM
LAST SAVED BY: dscheele

PROJECT NO. 202001-100000 FILE NAME: 20200100GE14.dwg

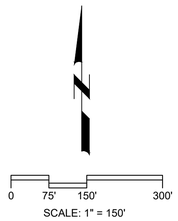

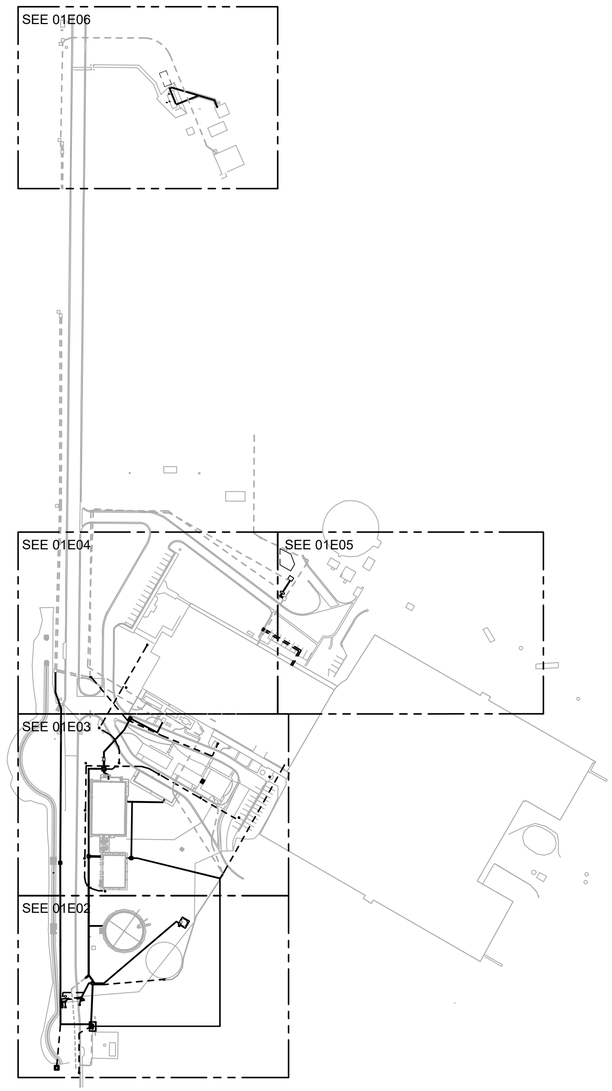

Know what's **below.**
Call 811 before you dig.

BLUE STAKES OF UTAH
UTILITY NOTIFICATION CENTER, INC.
www.bluestakes.org
1-800-662-4111

SCALE

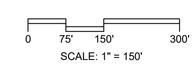

REV	DATE	BY	DESCRIPTION
			BID SET

DESIGNED SKB
DRAWN DJB
CHECKED GCE
DATE FEBRUARY 2025

REGISTERED PROFESSIONAL ENGINEER
No. 5329023
GUY C. EHLERS
STATE OF UTAH

carollo

JORDAN VALLEY WATER
CONSERVANCY DISTRICT

JORDAN VALLEY WATER TREATMENT PLANT
FILTER AND CHEMICAL FEED UPGRADES
ELECTRICAL
OVERALL SITE PLAN

VERIFY SCALES
BAR IS ONE INCH ON ORIGINAL DRAWING
0 1"
IF NOT ONE INCH ON THIS SHEET, ADJUST SCALES ACCORDINGLY

JOB NO. 202001.10
DRAWING NO. 01E01
SHEET NO. 288 OF 531

LAST SAVED BY: broepke

PROJECT NO.
FILE NAME: 20200101E01.dwg

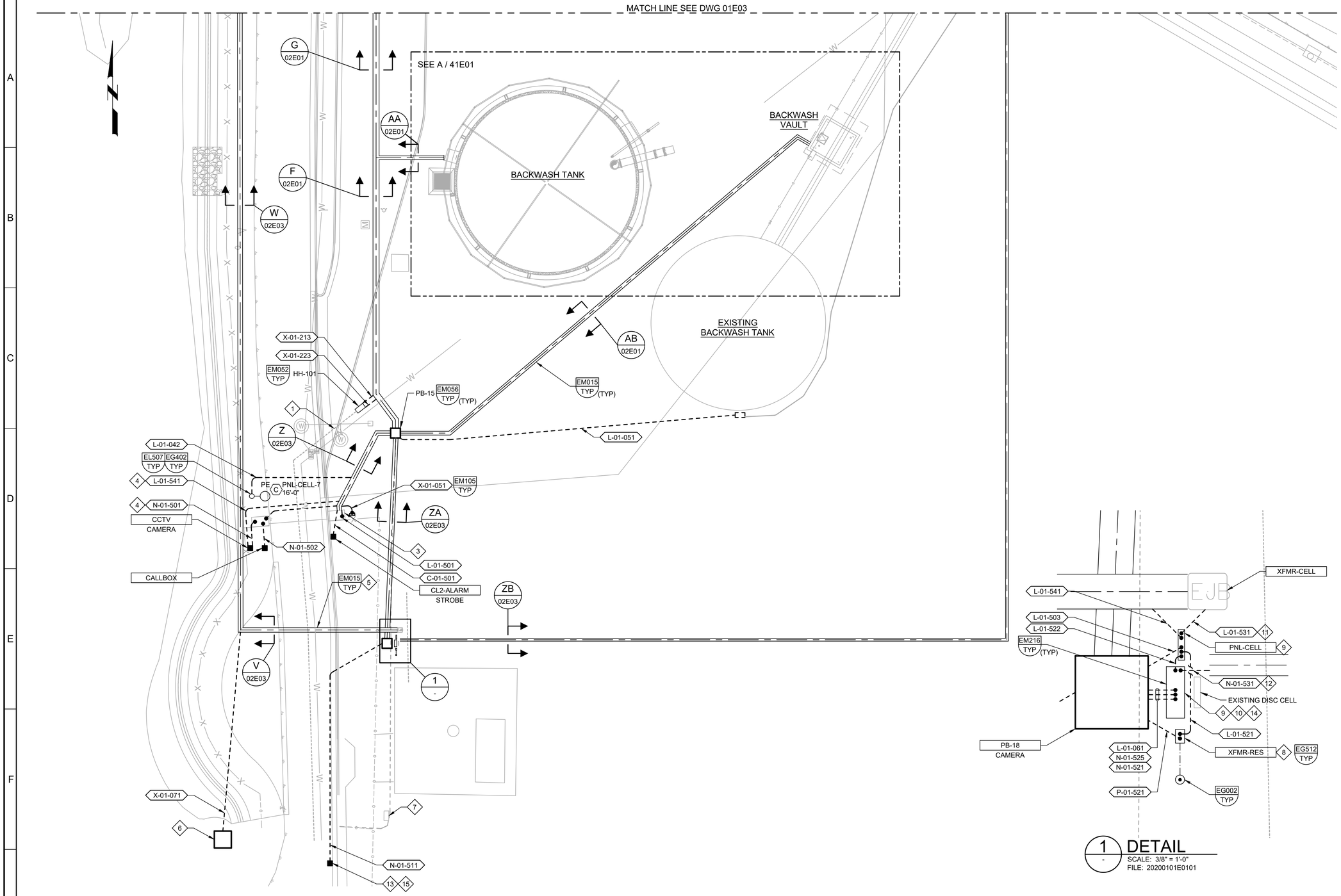

1 DETAIL
SCALE: 3/8" = 1'-0"
FILE: 20200101E0101

GENERAL NOTES:

1. SEE OVERALL SITE PLAN ON DRAWING 01E01.
2. SEE DRAWING 00DE01 FOR DEMOLITION IN THIS AREA.

KEY NOTES:

1. TWO ABANDONED 4-INCH CONDUITS. TERMINATE CONDUITS IN NEW HAND HOLE.
2. REROUTE TWO EXISTING CONDUITS WITH (3) #12 AWG CONDUCTORS FOR BACKWASH RESERVOIR LEVEL TRANSMITTER HEATER AND (1) 2/CS-#16 CABLE FOR LEVEL TRANSMITTER SIGNAL.
3. SOUTH SECURITY GATE, RELOCATED FROM EXISTING LOCATION. MODEL VPL-24, AG# AG8617, SERIAL NO. G-JA15-C03975. PROVIDE ALL NECESSARY CONDUIT AND WIRING TO MATCH EXISTING LOCATION.
4. STUB UP FOR SECURITY CAMERA, TO BE RELOCATED FROM EXISTING LOCATION.
5. PROVIDE CONCRETE CAP OVER DUCT BANK AS SHOWN IN THE TYPICAL DETAIL.
6. RELOCATE EXISTING PULL BOX FROM DRAWING 01DE01.
7. EXISTING PULL BOX FOR POWER AND FIBER OPTIC TO THE CULINARY RESERVOIR.
8. 3 KVA, 240V-480V, 1-PHASE, STEP UP TRANSFORMER FURNISHED BY OWNER, AND USED FOR TEMPORARY POWER TO THE CULINARY RESERVOIR.
9. PNL-CELL AND THE ELECTRONICS ENCLOSURE WILL BE PERMANENT. AT PROJECT COMPLETION, DISCONNECT POWER FROM XFMR-CELL TO PNL-CELL. RE-POWER PNL-CELL FROM PNL-CS IN THE CAUSTIC SODA BUILDING.
10. ELECTRONIC EQUIPMENT ENCLOSURE. 36 INCHES HIGH X 30 INCHES WIDE X 12 INCHES DEEP WITH BACK PANEL. RE-LOCATE ELECTRONIC EQUIPMENT FROM EXISTING GATE CONTROL BOX AND CHLORINE DIOXIDE RTU TO NEW ELECTRONICS ENCLOSURE AS SHOWN ON DRAWINGS. INSTALL NEW POWER METER AND OTHER NEW ITEMS AS REQUIRED.
11. TEMPORARY POWER FOR PNL-CELL.
12. TEMPORARY FIBER OPTIC FOR ELECTRONICS ENCLOSURE. ABANDON FIBER OPTIC AFTER THE PERMANENT FIBER OPTIC CONNECTION IS MADE TO RTU-CS.
13. FIELD VERIFY LOCATION OF EXISTING GATE CARD READER.
14. ELECTRONICS ENCLOSURE.
15. GATE CARD READER.

SCALE

0 10' 20' 40'
SCALE: 1" = 20'

REV	DATE	BY	DESCRIPTION
			BID SET

DESIGNED SKB
DRAWN NKK
CHECKED GCE
DATE FEBRUARY 2025

REGISTERED PROFESSIONAL ENGINEER No. 5329023 GUY C. EHLERS STATE OF UTAH

carollo®

JORDAN VALLEY WATER CONSERVANCY DISTRICT

JORDAN VALLEY WATER TREATMENT PLANT
FILTER AND CHEMICAL FEED UPGRADES
ELECTRICAL
ENLARGED SITE PLAN 1

VERIFY SCALES
BAR IS ONE INCH ON ORIGINAL DRAWING
0 1"
IF NOT ONE INCH ON THIS SHEET, ADJUST SCALES ACCORDINGLY

JOB NO. 202001.10
DRAWING NO. 01E02
SHEET NO. 289 OF 531

LAST SAVED BY: NKillian

PROJECT NO. FILE NAME: 20200101E02.dwg

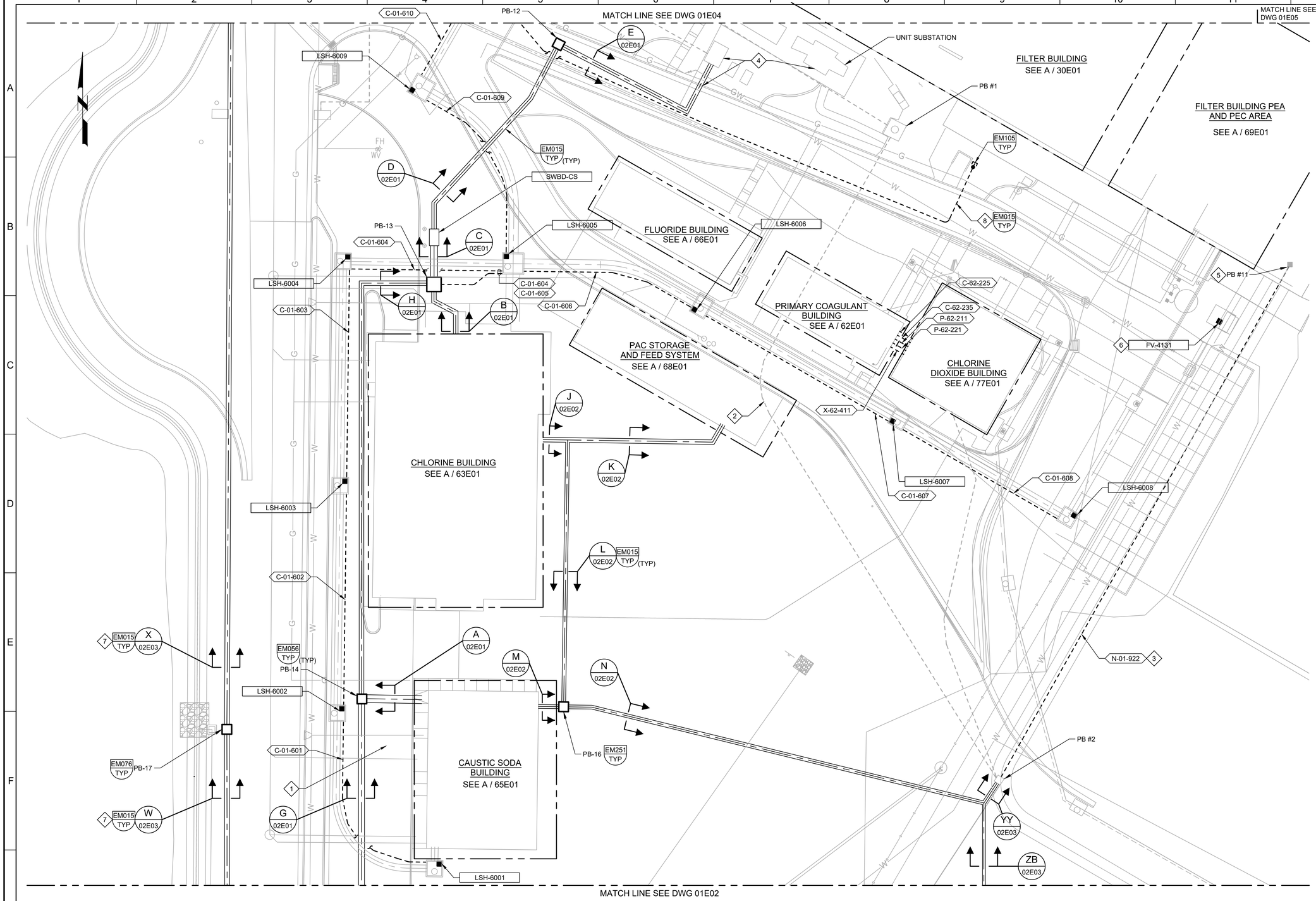

GENERAL NOTES:

1. SEE OVERALL SITE PLAN ON DRAWING 01E01.
2. SEE DRAWING 00DE02 FOR DEMOLITION IN THIS AREA.
3. PROVIDE 120VAC, 1 POLE INSTRUMENT DISCONNECT PER DETAIL NA900/TYP FOR ALL 4-WIRE INSTRUMENTS.

KEY NOTES:

1. REROUTE EXISTING 12.47KV SINGLE PHASE CIRCUIT BETWEEN HANDHOLE AND SECTIONALIZER 4 FOR THE CELL TOWER. REFER TO ONE-LINE DIAGRAM ON DRAWING 03E02 FOR CABLE SIZE. SPLICE IN HANDHOLE AND PROVIDE NEW CABLES TO MATCH EXISTING CABLES.
2. PROTECT EXISTING DUCT BANK IN PLACE BELOW THE NEW PAC AREA.
3. USE EXISTING SPARE CONDUIT TO ROUTE FIBER OPTIC WIRING THROUGH EXISTING DUCT BANK FROM PB #2 TO PB #11.
4. USE EXISTING VAULT BELOW THE TRANSFORMER TO ROUTE NEW 480V CIRCUIT FROM UNIT SUBSTATION TO NEW SWBD-CS THROUGH TWO EXISTING CONDUITS AND NEW DUCT BANK.
5. SEE DRAWING 30E10 FOR CONTINUATION.
6. RECONNECT NEW VALVE ACTUATOR TO EXISTING POWER AND I/O CONDUCTORS.
7. PROVIDE CONCRETE CAP OVER DUCT BANK AS SHOWN IN THE TYPICAL DETAIL.
8. INSTALL 5-INCH PVC CONDUIT. USE EXISTING SPARE CONDUIT IN EXISTING DUCT BANK.

Know what's below.
Call 811 before you dig.

BLUE STAKES OF UTAH
UTILITY NOTIFICATION CENTER, INC.
www.bluestakes.org
1-800-662-4111

SCALE

0 10' 20' 40'
SCALE: 1" = 20'

REV	DATE	BY	DESCRIPTION
			BID SET

DESIGNED SKB
DRAWN NKK
CHECKED GCE
DATE FEBRUARY 2025

REGISTERED PROFESSIONAL ENGINEER No. 5329023 GUY C. EHLERS STATE OF UTAH

carollo

JORDAN VALLEY WATER CONSERVANCY DISTRICT

JORDAN VALLEY WATER TREATMENT PLANT
FILTER AND CHEMICAL FEED UPGRADES
ELECTRICAL
ENLARGED SITE PLAN 3

VERIFY SCALES
BAR IS ONE INCH ON ORIGINAL DRAWING
0 1"
IF NOT ONE INCH ON THIS SHEET, ADJUST SCALES ACCORDINGLY

JOB NO. 202001.10
DRAWING NO. 01E03
SHEET NO. 290 OF 531

LAST SAVED BY: NKillian
PROJECT NO.
FILE NAME: 20200101E03.dwg

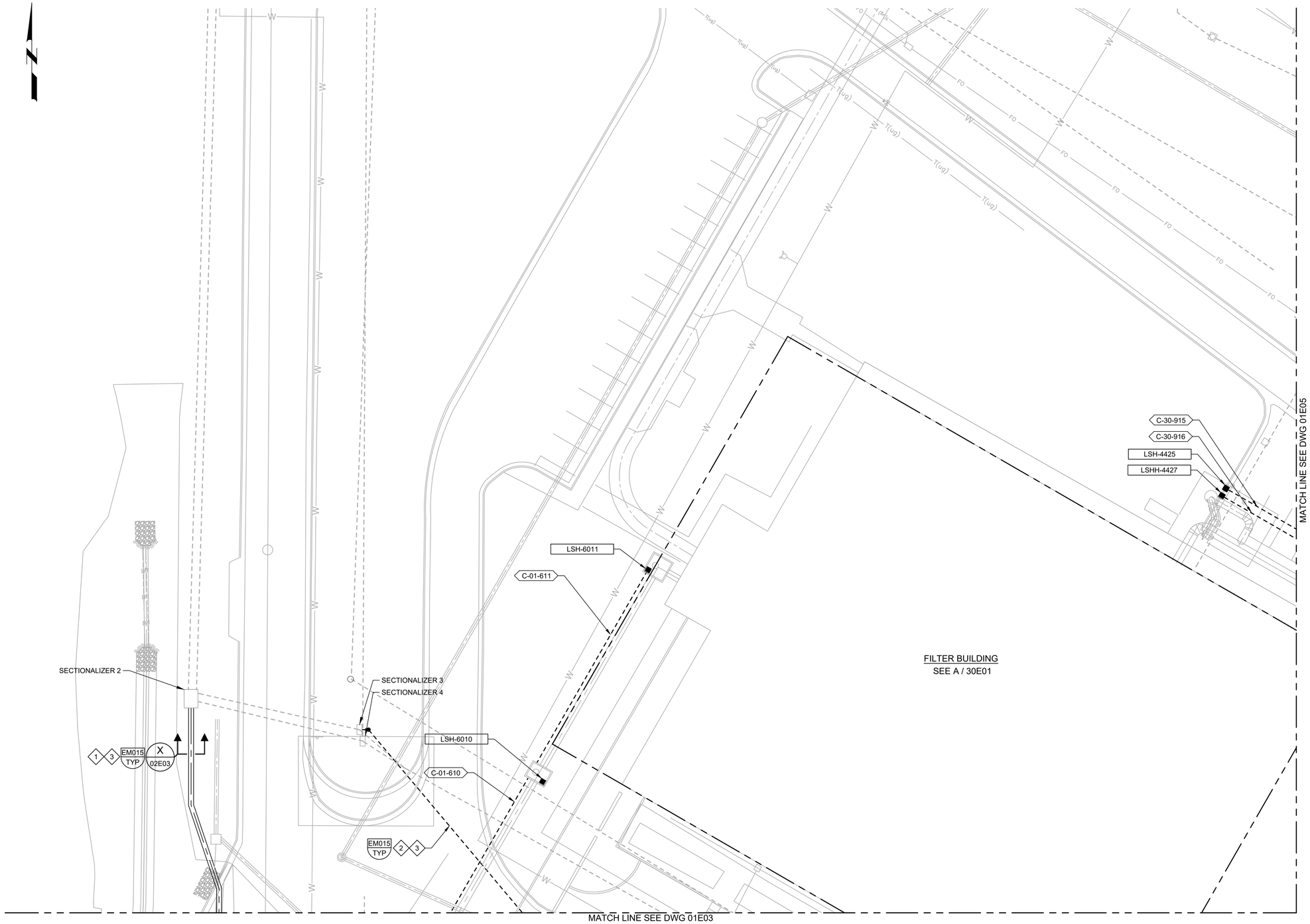

GENERAL NOTES:

1. SEE OVERALL SITE PLAN ON DRAWING 01E01.
2. SEE DRAWING 00DE03 FOR DEMOLITION IN THIS AREA.
3. PROVIDE 120VAC, 1 POLE INSTRUMENT DISCONNECT PER DETAIL NA900/TYP FOR ALL 4-WIRE INSTRUMENTS.

KEY NOTES:

1. REROUTE EXISTING 12.47KV SINGLE PHASE CIRCUIT BETWEEN HANDHOLE AND SECTIONALIZER 4 FOR THE CELL TOWER. REFER TO ONE-LINE DIAGRAM ON DRAWING 03E02 FOR CABLE SIZE. SPLICE IN HANDHOLE AND PROVIDE NEW CABLES TO MATCH EXISTING CABLES.
2. INSTALL 5-INCH PVC CONDUIT.
3. PROVIDE CONCRETE CAP OVER DUCT BANK AS SHOWN IN THE TYPICAL DETAIL.

SCALE

0 10' 20' 40'

SCALE: 1" = 20'

REV	DATE	BY	DESCRIPTION

BID SET

DESIGNED SKB
DRAWN NKK
CHECKED GCE
DATE FEBRUARY 2025

REGISTERED PROFESSIONAL ENGINEER No. 5329023 GUY C. EHLERS STATE OF UTAH

carollo

JORDAN VALLEY WATER CONSERVANCY DISTRICT

JORDAN VALLEY WATER TREATMENT PLANT
FILTER AND CHEMICAL FEED UPGRADES
ELECTRICAL
ENLARGED SITE PLAN 4

VERIFY SCALES
BAR IS ONE INCH ON ORIGINAL DRAWING
0 1"
IF NOT ONE INCH ON THIS SHEET, ADJUST SCALES ACCORDINGLY

JOB NO. 202001.10
DRAWING NO. 01E04
SHEET NO. 291 OF 531

LAST SAVED BY: NKillian

PROJECT NO.
FILE NAME: 20200101E04.dwg

PULL BOX #7

1 - PHOTO

SCALE: NO SCALE
FILE: 202001_01E0401

GENERAL NOTES:

1. SEE OVERALL SITE PLAN ON DRAWING 01E01.
2. SEE DRAWING 00DE04 FOR DEMOLITION OF THIS AREA.
3. APF= ALTERNATE PLANT FEED.

KEY NOTES:

1. PROVIDE NEW CONCRETE TRANSFORMER PAD FOR NEW TRANSFORMER AS SHOWN ON DRAWING 03E02. PROTECT EXISTING UNDERGROUND 12.47KV CIRCUIT IN PLACE.
2. REPLACE EXISTING PORTABLE GENERATOR CONNECTION BOX AS SHOWN ON DRAWINGS 03E01 AND 03E02. SALVAGE EQUIPMENT.
3. INTERCEPT EXISTING CIRCUIT FROM THE UNIT SUBSTATION TO MCC-WW, AND CONNECT THE CIRCUIT FROM THE UNIT SUBSTATION TO NEW MANUAL TRANSFER BREAKER IN THE NEW SWBD-APF AS SHOWN ON DRAWINGS 03E01 AND 03E02. THE CIRCUIT FROM THE UNIT SUBSTATION WILL BECOME THE SECONDARY OR ALTERNATE POWER SOURCE FOR MCC-WW WITH THE PRIMARY POWER SOURCE FROM SWBD-APF.
4. PULL TWO EXISTING SETS OF 500 KCMIL CONDUCTORS FOR THE CIRCUIT TO THE ATS IN THE FILTER BUILDING FOR MCC-A1 FROM PB #7 INTO NEW SWBD-APF. SPLICE ONTO EXISTING THIRD SET OF CONDUCTORS FOR THE ATS IN PB #7 AND CONNECT TO NEW SWBD-APF THROUGH NEW DUCT BANK U. REFER TO KEY NOTE 3 ON DRAWING 01DE04 AND KEY NOTE 10 ON DRAWING 03E02.
5. NEW DUCT BANK U.
6. REUSE EXISTING CONDUIT TO PULL NEW CABLES BETWEEN SWBD-APF AND MCC-WW. EXISTING CABLES MAY BE SPLICED IN PB #7. SPLICED CABLES MUST BE TESTED AND MEET THE SAME TEST REQUIREMENTS AS NEW CABLES.
7. RESERVED FOR PORTABLE GENERATORS.

SCALE

0 10' 20' 40'
SCALE: 1" = 20'

REV	DATE	BY	DESCRIPTION
			BID SET

DESIGNED SKB
DRAWN NKK
CHECKED GCE
DATE FEBRUARY 2025

REGISTERED PROFESSIONAL ENGINEER No. 5329023 GUY C. EHLERS STATE OF UTAH

carollo

JORDAN VALLEY WATER CONSERVANCY DISTRICT

JORDAN VALLEY WATER TREATMENT PLANT
FILTER AND CHEMICAL FEED UPGRADES
ELECTRICAL
ENLARGED SITE PLAN 5

VERIFY SCALES
BAR IS ONE INCH ON ORIGINAL DRAWING
0 1"
IF NOT ONE INCH ON THIS SHEET, ADJUST SCALES ACCORDINGLY

JOB NO. 202001.10
DRAWING NO. 01E05
SHEET NO. 292 OF 531

LAST SAVED BY: NKillian

PROJECT NO.
FILE NAME: 20200101E05.dwg

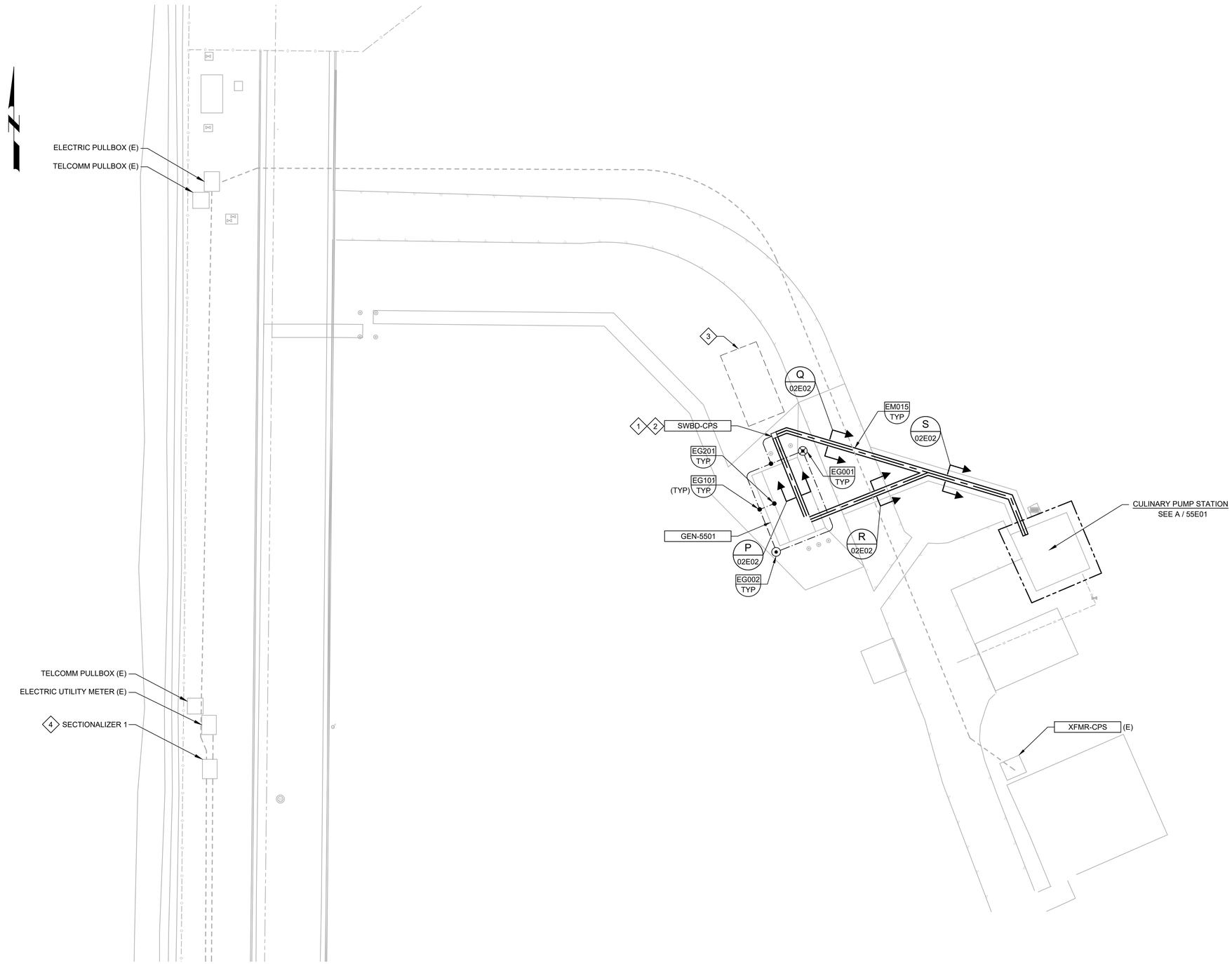

GENERAL NOTES:

1. SEE OVERALL SITE PLAN ON DRAWING 01E01.
2. BOND DUCT BANKS TO GROUND RING.

KEY NOTES:

1. REFER TO KEY NOTE 3 ON DRAWING 03E02.
2. RELOCATE EXISTING GENERATOR CONNECTION BOX (SWBD-APF) FROM DRAWING 01DE04. INSTALL ON CONCRETE PAD AND RELABEL AS SWBD-CPS.
3. SPACE RESERVED FOR PORTABLE GENERATOR.
4. REFER TO DESCRIPTION OF WORK ON DRAWING 03E02.

Know what's below.
Call 811 before you dig.

BLUE STAKES OF UTAH
UTILITY NOTIFICATION CENTER, INC.
www.bluestakes.org
1-800-662-4111

SCALE 1" = 20'
10' 20' 40'

REV	DATE	BY	DESCRIPTION
			BID SET

DESIGNED SKB
DRAWN NKK
CHECKED GCE
DATE FEBRUARY 2025

REGISTERED PROFESSIONAL ENGINEER No. 5329023 GUY C. EHLERS STATE OF UTAH

carollo

JORDAN VALLEY WATER CONSERVANCY DISTRICT

JORDAN VALLEY WATER TREATMENT PLANT
FILTER AND CHEMICAL FEED UPGRADES
ELECTRICAL
ENLARGED SITE PLAN 6

VERIFY SCALES
BAR IS ONE INCH ON ORIGINAL DRAWING
0 1"
IF NOT ONE INCH ON THIS SHEET, ADJUST SCALES ACCORDINGLY

JOB NO. 202001.10
DRAWING NO. 01E06
SHEET NO. 293 OF 531

LAST SAVED BY: NKillian

PROJECT NO. FILE NAME: 20200101E06.dwg

GENERAL NOTES:

1. CONSTRUCT DUCT BANK PER DETAIL EM015/TYP UNLESS OTHERWISE INDICATED.

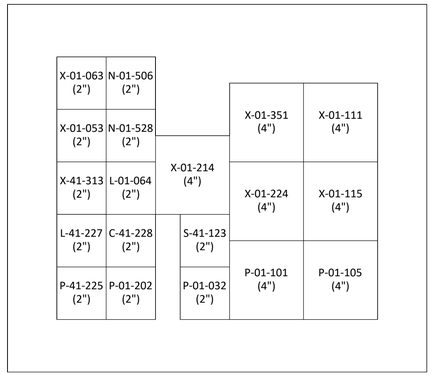

Width: 3'-3"
Height: 2'-11"

A DUCT BANK SECTION

01E03

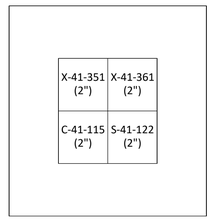

Width: 1'-7"
Height: 1'-9"

AA DUCT BANK SECTION

01E02

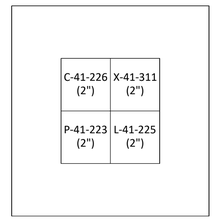

Width: 1'-7"
Height: 1'-9"

AB DUCT BANK SECTION

01E02

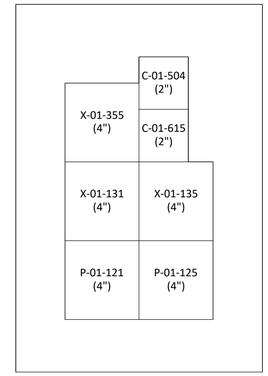

Width: 1'-11"
Height: 3'-3"

B DUCT BANK SECTION

01E03

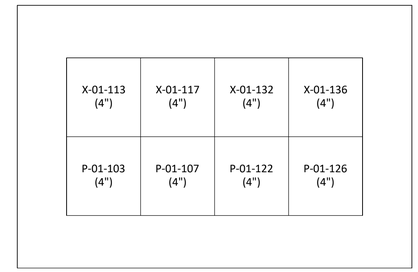

Width: 3'-0"
Height: 2'-2"

C DUCT BANK SECTION

01E03

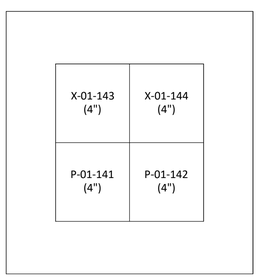

Width: 1'-11"
Height: 2'-2"

D DUCT BANK SECTION

01E03

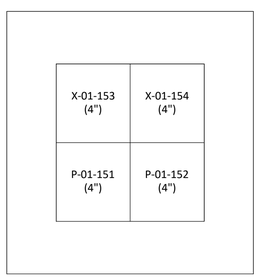

Width: 1'-11"
Height: 2'-2"

E DUCT BANK SECTION

01E03

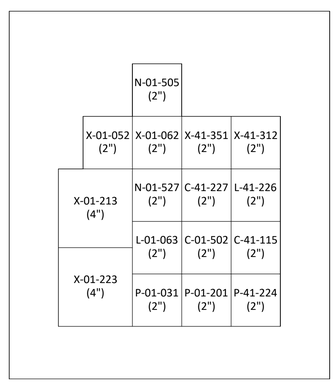

Width: 2'-6"
Height: 2'-11"

F DUCT BANK SECTION

01E02

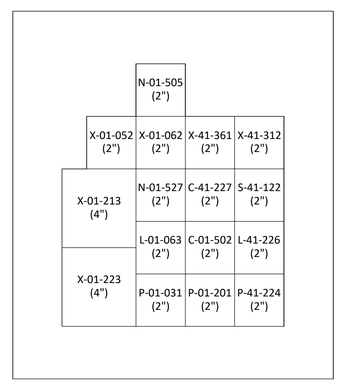

Width: 2'-6"
Height: 2'-11"

G DUCT BANK SECTION

01E02, 01E03

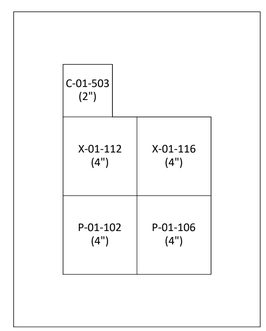

Width: 1'-11"
Height: 2'-10"

H DUCT BANK SECTION

01E03

UPDATE DATE: 2/10/2025 11:14:35 AM

REV	DATE	BY	DESCRIPTION
			BID SET

DESIGNED CE
DRAWN NCS
CHECKED GCE
DATE FEBRUARY 2025

REGISTERED PROFESSIONAL ENGINEER No. 5329023 GUY C. EHLERS STATE OF UTAH

carollo

JORDAN VALLEY WATER CONSERVANCY DISTRICT

JORDAN VALLEY WATER TREATMENT PLANT
FILTER AND CHEMICAL FEED UPGRADES
ELECTRICAL
DUCT BANK SECTIONS 1

VERIFY SCALES
BAR IS ONE INCH ON ORIGINAL DRAWING
0 1"
IF NOT ONE INCH ON THIS SHEET, ADJUST SCALES ACCORDINGLY

JOB NO. 202001.10
DRAWING NO. 02E01
SHEET NO. 294 OF 531

Plot Date: 9/12/2022 7:29:07 AM
LAST SAVED BY: NKillian

PROJECT NO. 202001-100000 FILE NAME: 20200102E01.dwg

GENERAL NOTES:

1. CONSTRUCT DUCT BANK PER DETAIL EM015/TYP UNLESS OTHERWISE INDICATED.

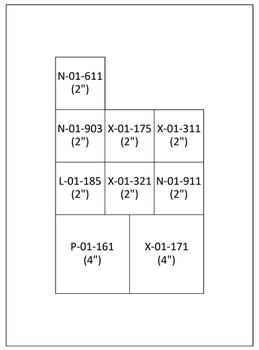

Width: 1'-11"
Height: 3'-0"

J DUCT BANK SECTION

01E03

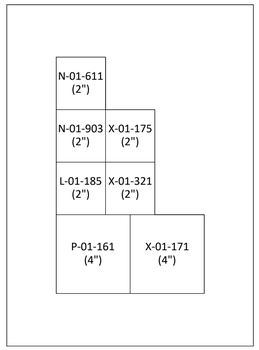

Width: 1'-11"
Height: 3'-0"

K DUCT BANK SECTION

01E03

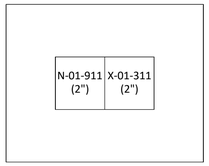

Width: 1'-7"
Height: 1'-5"

L DUCT BANK SECTION

01E03

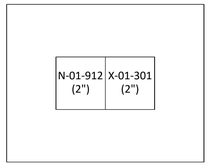

Width: 1'-7"
Height: 1'-5"

M DUCT BANK SECTION

01E03

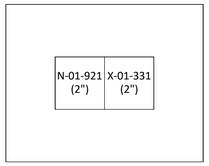

Width: 1'-7"
Height: 1'-5"

N DUCT BANK SECTION

01E03

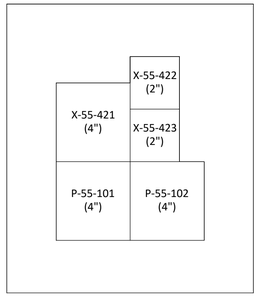

Width: 1'-11"
Height: 2'-8"

P DUCT BANK SECTION

01E06

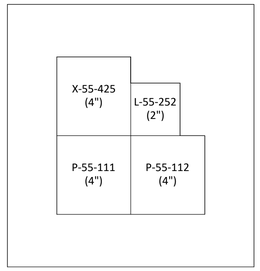

Width: 1'-11"
Height: 2'-4"

Q DUCT BANK SECTION

01E06

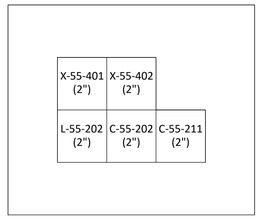

Width: 1'-11"
Height: 1'-9"

R DUCT BANK SECTION

01E06

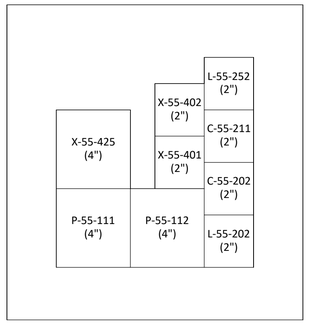

Width: 2'-4"
Height: 2'-8"

S DUCT BANK SECTION

01E06

UPDATE DATE: 2/10/2025 11:14:40 AM

REV	DATE	BY	DESCRIPTION
			BID SET

DESIGNED CE
DRAWN NCS
CHECKED GCE
DATE FEBRUARY 2025

REGISTERED PROFESSIONAL ENGINEER No. 5329023 GUY C. EHLERS STATE OF UTAH

carollo

JORDAN VALLEY WATER CONSERVANCY DISTRICT

JORDAN VALLEY WATER TREATMENT PLANT
FILTER AND CHEMICAL FEED UPGRADES
ELECTRICAL
DUCT BANK SECTIONS 2

VERIFY SCALES
BAR IS ONE INCH ON ORIGINAL DRAWING
0 1"
IF NOT ONE INCH ON THIS SHEET, ADJUST SCALES ACCORDINGLY

JOB NO. 202001.10
DRAWING NO. 02E02
SHEET NO. 295 OF 531

Plot Date: 9/12/2022 7:29:07 AM
LAST SAVED BY: NKillian
PROJECT NO. 202001-100000 FILE NAME: 20200102E02.dwg

GENERAL NOTES:

1. CONSTRUCT DUCT BANK PER DETAIL EM015/TYP UNLESS OTHERWISE INDICATED.

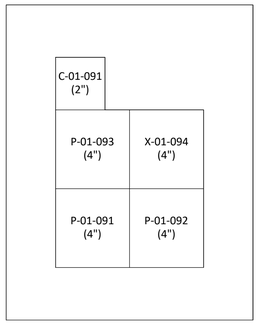

Width: 1'-11"
Height: 2'-10"

T DUCT BANK SECTION

01E05

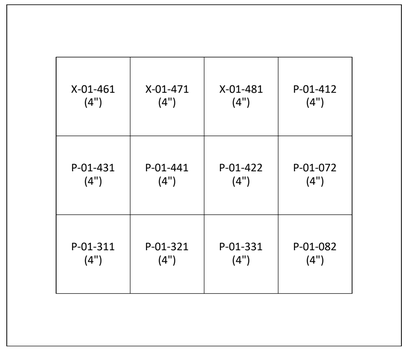

Width: 3'-0"
Height: 2'-8"

U DUCT BANK SECTION

01E05

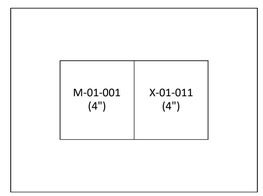

Width: 1'-11"
Height: 1'-7"

V DUCT BANK SECTION

01E02

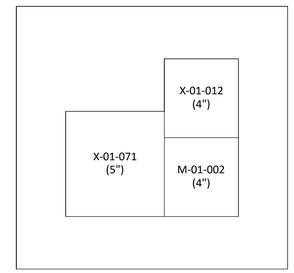

Width: 2'-0"
Height: 2'-2"

W DUCT BANK SECTION

01E02, 01E03

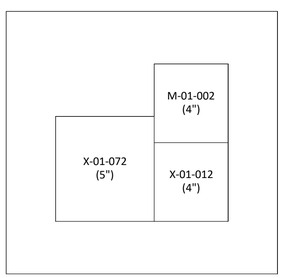

Width: 2'-0"
Height: 2'-2"

X DUCT BANK SECTION

01E03, 01E04

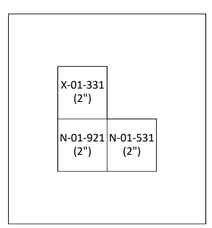

Width: 1'-7"
Height: 1'-9"

YY DUCT BANK SECTION

01E03

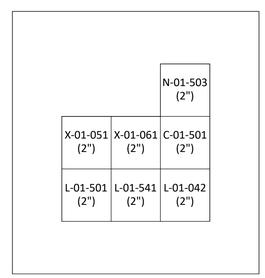

Width: 1'-11"
Height: 2'-2"

Z DUCT BANK SECTION

01E02

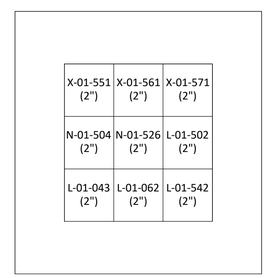

Width: 1'-11"
Height: 2'-2"

ZA DUCT BANK SECTION

01E02

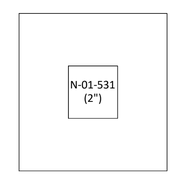

Width: 1'-2"
Height: 1'-5"

ZB DUCT BANK SECTION

01E02, 01E03

UPDATE DATE: 2/10/2025 11:14:41 AM

REV	DATE	BY	DESCRIPTION
			BID SET

DESIGNED CE
DRAWN NCS
CHECKED GCE
DATE FEBRUARY 2025

REGISTERED PROFESSIONAL ENGINEER No. 5329023 GUY C. EHLERS STATE OF UTAH

carollo®

JORDAN VALLEY WATER CONSERVANCY DISTRICT

JORDAN VALLEY WATER TREATMENT PLANT
FILTER AND CHEMICAL FEED UPGRADES
ELECTRICAL
DUCT BANK SECTIONS 3

VERIFY SCALES
BAR IS ONE INCH ON ORIGINAL DRAWING
0 1"
IF NOT ONE INCH ON THIS SHEET, ADJUST SCALES ACCORDINGLY

JOB NO. 202001.10
DRAWING NO. 02E03
SHEET NO. 296 OF 531

Plot Date: 9/12/2022 7:29:07 AM
LAST SAVED BY: NKillian

PROJECT NO. 202001-100000 FILE NAME: 20200102E03.dwg

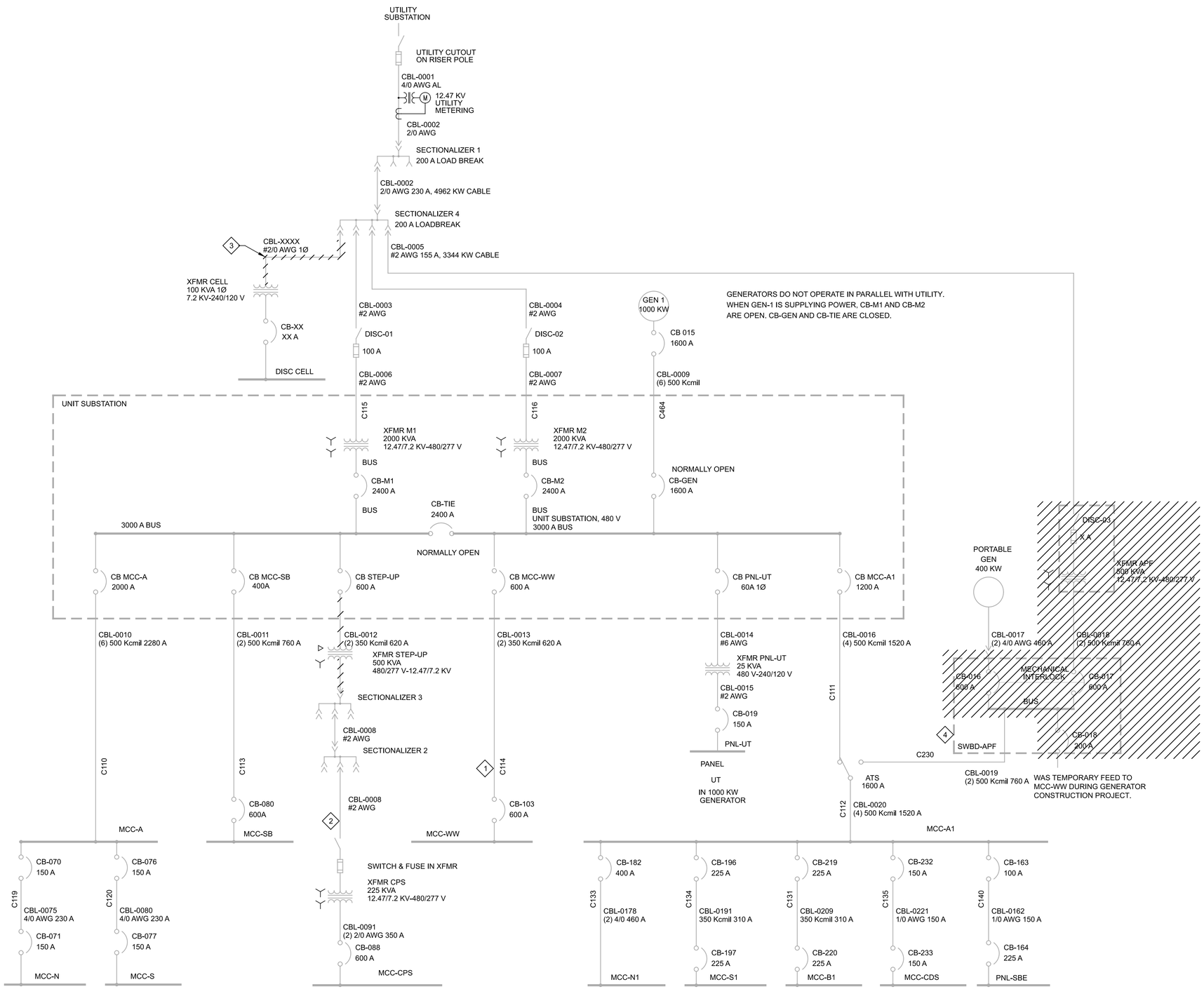

GENERAL NOTES:

1. ONE-LINE BACKGROUND PROVIDED BY JORDAN VALLEY. NO STATEMENTS OF ACCURACY ARE IMPLIED. FIELD VERIFY SITE CONDITIONS BEFORE PERFORMING THE WORK.

KEY NOTES:

1. DISCONNECT EXISTING CIRCUIT FROM MCC-WW AND PULL CONDUCTORS BACK INTO PULLBOX PB #7. REFER TO 03E02 FOR MODIFIED CIRCUIT.
2. INTERCEPT EXISTING CIRCUIT BELOW SECTIONALIZER 1 AND RE-POWER XFMR CPS AS SHOWN ON DRAWINGS 03E02 AND 03E03. RE-POWER SECTIONALIZERS 2 AND 3 AS SHOWN ON DRAWING 03E03.
3. DEMOLISH EXISTING CIRCUIT. EQUIPMENT WILL BE RE-POWERED AS SHOWN ON THE SITE PLANS. ADDITIONALLY REFER TO DRAWING 03E03.
4. REMOVE EQUIPMENT AND RELOCATE TO THE CULINARY PUMP STATION. RELABEL AS SWBD-CPS. REFER TO KEY NOTE 2 ON DRAWING 03E03.

REV	DATE	BY	DESCRIPTION
			BID SET

DESIGNED SKB
DRAWN DPM
CHECKED GCE
DATE FEBRUARY 2025

REGISTERED PROFESSIONAL ENGINEER No. 5329023 GUY C. EHLERS STATE OF UTAH

carollo®

JORDAN VALLEY WATER CONSERVANCY DISTRICT

JORDAN VALLEY WATER TREATMENT PLANT
FILTER AND CHEMICAL FEED UPGRADES
ELECTRICAL
OVERALL ONE-LINE DIAGRAM (EXISTING)

VERIFY SCALES
BAR IS ONE INCH ON ORIGINAL DRAWING
0 1"
IF NOT ONE INCH ON THIS SHEET, ADJUST SCALES ACCORDINGLY

JOB NO. 202001.10
DRAWING NO. 03E01
SHEET NO. 297 OF 531

PROJECT NO. 202001-100000 FILE NAME: 20200103E01.dgn

Plot Date: 10-FEB-2025 2:38:08 PM
User: svcPW
PlotScale: 1:1
DesignScript: Carollo_Std_Pen_v0905.pen
ColorTable: gshade.ctb
Model: Layout1
LAST SAVED BY: CRollins

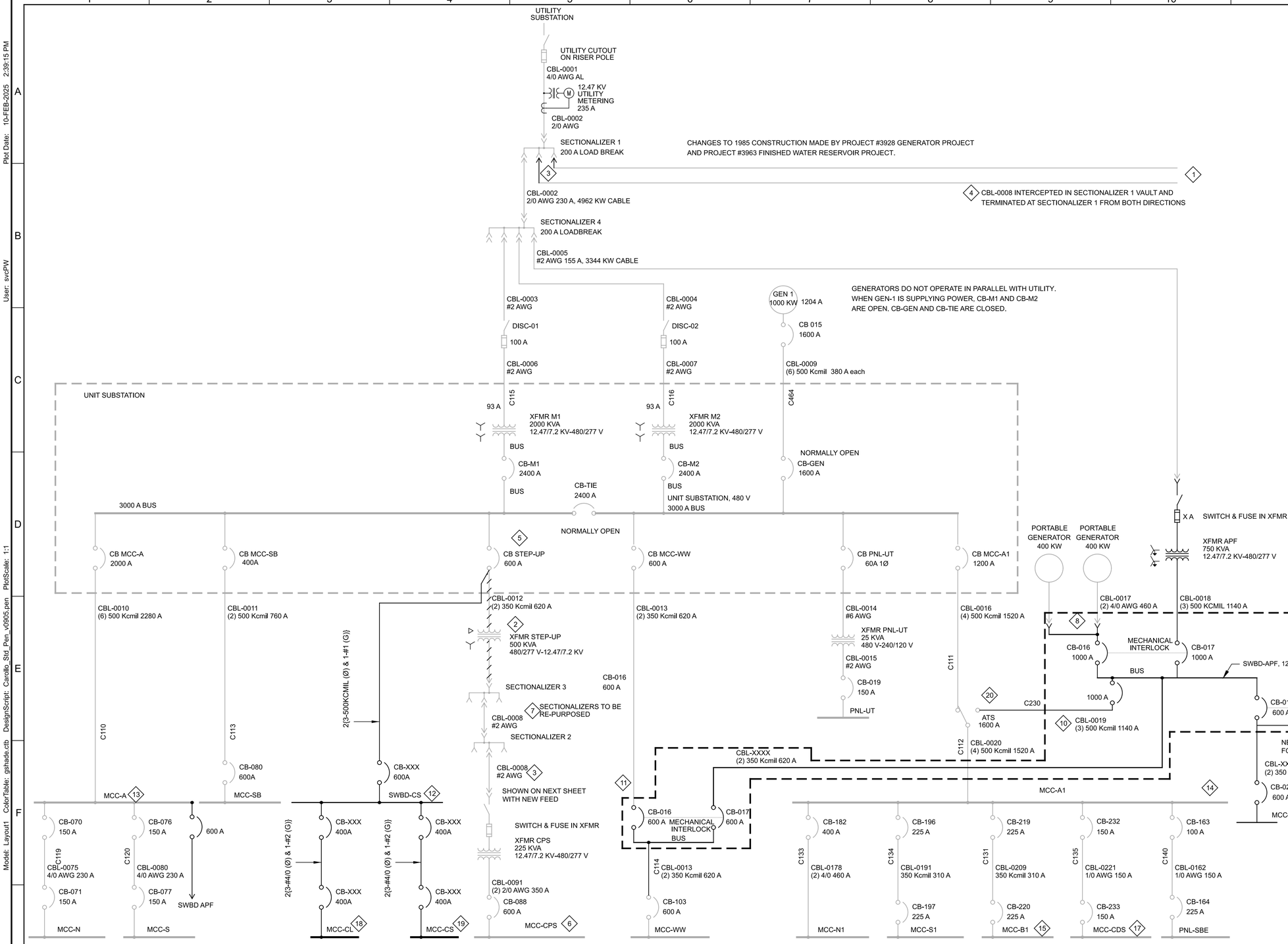

GENERAL NOTES:

1. ONE-LINE BACKGROUND PROVIDED BY JORDAN VALLEY. NO STATEMENTS OF ACCURACY ARE IMPLIED. FIELD VERIFY SITE CONDITIONS BEFORE PERFORMING THE WORK.
2. REFER TO MCC ONE-LINE DIAGRAMS FOR DETAILS OF DELETED, MODIFIED, OR NEW LOADS.
3. CB-XXX AND CBL-XXXX NUMBERS TO BE ASSIGNED BY OWNER.

KEY NOTES:

1. CONDUIT CONTINUES ON DRAWING 03E03.
2. SALVAGE TRANSFORMER AND TURN OVER TO JVWCD.
3. CABLE CBL-0008 PASSES THROUGH THE PAD-VAULT BELOW SECTIONALIZER 1. APPROXIMATELY 10 FEET OF EXTRA CABLE EXISTS IN THE VAULTS ON EACH END OF THE CABLE RUN. CUT CABLES IN THE PAD-VAULT BELOW SECTIONALIZER 1. PULL BOTH CABLE SETS INTO THE SECTIONALIZER VAULT ENOUGH TO TERMINATE ON THE SPARE SECTIONALIZER TERMINALS. MODIFIED CABLE CBL-0008 IS SHOWN AT TOP OF THIS ONE-LINE DIAGRAM.
4. MODIFIED CABLE CBL-0008. EXISTING CABLE CBL-0008 IS SHOWN BELOW ON THIS ONE-LINE.
5. RENAME CIRCUIT BREAKER TO CB-CS.
6. REFER TO ONE-LINE DRAWING 03E03 FOR MCC-CPS POWER SOURCE MODIFICATIONS.
7. REFER TO DRAWING 03E03 FOR MODIFIED POWER FLOW THROUGH THESE SECTIONALIZERS.
8. PROVIDE CAM LOCK FITTINGS COMPATIBLE WITH THE EXISTING DISTRICT PORTABLE GENERATORS.
9. PROVIDE ONE COMMON OUTDOOR ENCLOSURE.
10. ONLY TWO SETS OF THE THREE PARALLEL RUNS ARE PRESENTLY CONNECTED BETWEEN THE EXISTING SWBD-APF AND THE ATS. SPLICE ONTO THE THIRD PARALLEL SET OF CONDUCTORS IN PULLBOX PB #7 AND ROUTE INTO NEW SWBD-APF WITH THE OTHER TWO EXISTING SETS OF CONDUCTORS. MEGGER TEST EXISTING CONDUCTORS PRIOR TO USE. IF MEGGER TEST RESULTS ARE NOT ACCEPTABLE, DEMOLISH EXISTING CONDUCTORS AND REPLACE WITH NEW CONDUCTOR BETWEEN THE ATS FOR MCC-A AND NEW SWBD-APF.
11. ROUTE CONDUCTORS INTO NEW SWBD-APF.
12. REFER TO DRAWING 03E05.
13. REFER TO DRAWING 03E08.
14. REFER TO DRAWING 03E11.
15. REFER TO DRAWING 03E14.
16. REFER TO DRAWING 03E16.
17. REFER TO DRAWING 03E18.
18. REFER TO DRAWING 03E20.
19. REFER TO DRAWING 03E22.
20. TERMINATE THE EXISTING THIRD SET OF CONDUCTORS TO THE ATS.

REV	DATE	BY	DESCRIPTION
			BID SET

DESIGNED SKB
DRAWN DPM
CHECKED GCE
DATE FEBRUARY 2025

REGISTERED PROFESSIONAL ENGINEER No. 5329023 GUY C. EHLERS STATE OF UTAH

carollo®

JORDAN VALLEY WATER CONSERVANCY DISTRICT

JORDAN VALLEY WATER TREATMENT PLANT
FILTER AND CHEMICAL FEED UPGRADES
ELECTRICAL
OVERALL ONE-LINE DIAGRAM (MODIFIED) 1

VERIFY SCALES
BAR IS ONE INCH ON ORIGINAL DRAWING
0 1"
IF NOT ONE INCH ON THIS SHEET, ADJUST SCALES ACCORDINGLY

JOB NO. 202001.10
DRAWING NO. 03E02
SHEET NO. 298 OF 531

PROJECT NO. 202001-100000 FILE NAME: 20200103E02.dgn

Plot Date: 10-FEB-2025 2:39:15 PM
User: svcPW
PlotScale: 1:1
DesignScript: Carollo_Std_Pen_v0905.pen
ColorTable: gshade.ctb
Model: Layout1
LAST SAVED BY: mhood

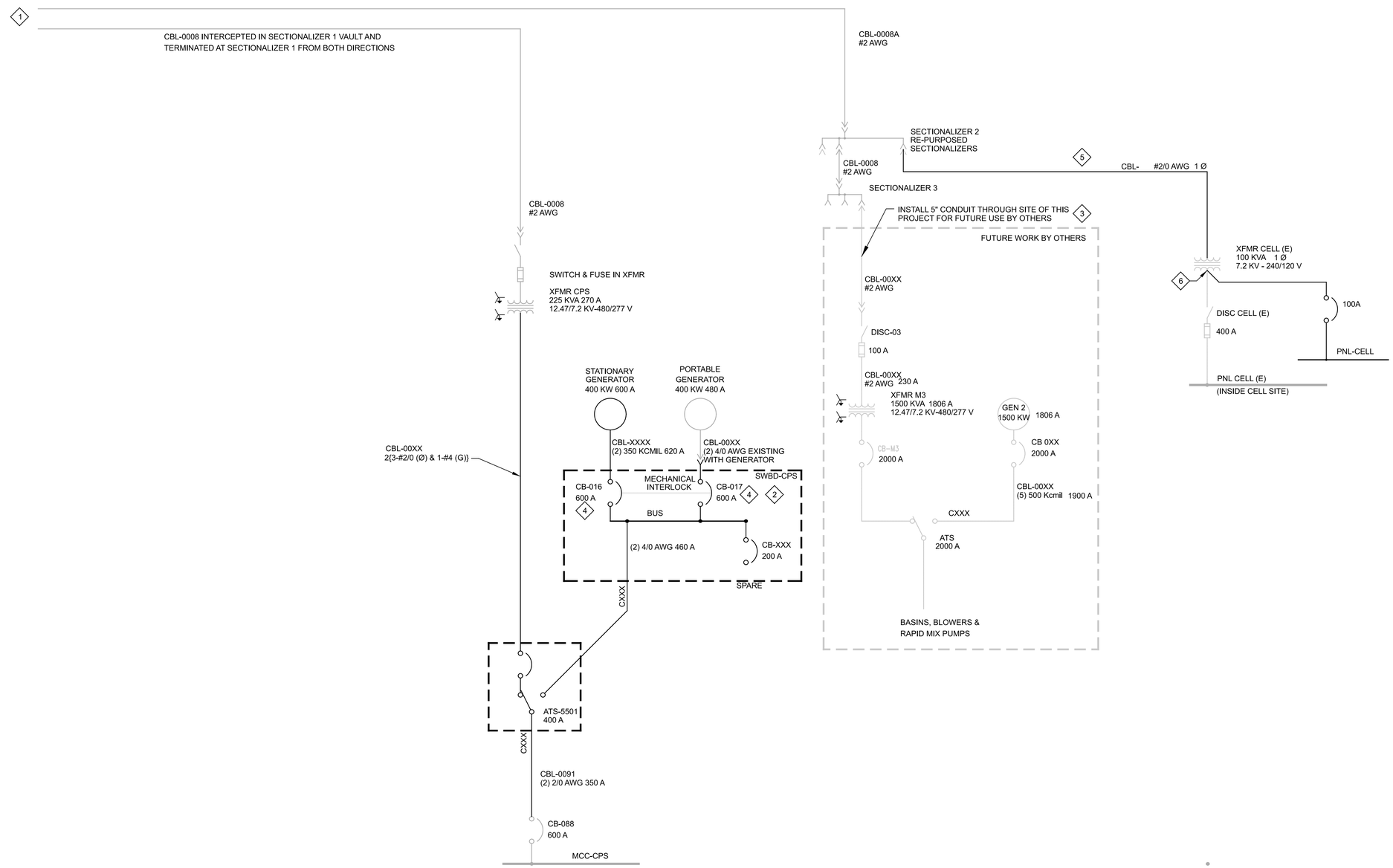

GENERAL NOTES:

1. ONE-LINE BACKGROUND PROVIDED BY JORDAN VALLEY. NO STATEMENTS OF ACCURACY ARE IMPLIED. FIELD VERIFY SITE CONDITIONS BEFORE PERFORMING THE WORK.
2. CB-XXX AND CBL-XXXX NUMBERS TO BE ASSIGNED BY OWNER.

KEY NOTES:

1. CONDUIT CONTINUES ON DRAWING 03E02.
2. EXISTING SWITCHBOARD FORMERLY IDENTIFIED AS "SWBD-APF" FOR THE ALTERNATE PLANT FEED TO BE RELOCATED TO THE CULINARY PUMP STATION AND RELABELED AS SWBD-CPS. REFER TO DRAWING 01E06.
3. INSTALL NEW 5-INCH CONDUIT AS SHOWN ON DRAWINGS 01E03 AND 01E04.
4. UPDATE EXISTING BREAKER TO 350A TRIP.
5. REROUTE EXISTING CIRCUIT AS SHOWN ON THE SITE PLAN DRAWINGS.
6. TAP OFF OF SECONDARY SIDE OF TRANSFORMER FOR TEMPORARY POWER TO NEW PANELBOARD PNL-CELL.

REV	DATE	BY	DESCRIPTION
			BID SET

DESIGNED SKB
DRAWN DPM
CHECKED GCE
DATE FEBRUARY 2025

REGISTERED PROFESSIONAL ENGINEER No. 5329023 GUY C. EHLERS STATE OF UTAH

carollo®

JORDAN VALLEY WATER CONSERVANCY DISTRICT

JORDAN VALLEY WATER TREATMENT PLANT
FILTER AND CHEMICAL FEED UPGRADES
ELECTRICAL
OVERALL ONE-LINE DIAGRAM (MODIFIED) 2

VERIFY SCALES
BAR IS ONE INCH ON ORIGINAL DRAWING
0 1"
IF NOT ONE INCH ON THIS SHEET, ADJUST SCALES ACCORDINGLY

JOB NO. 202001.10
DRAWING NO. 03E03
SHEET NO. 299 OF 531

PROJECT NO. 202001-100000 FILE NAME: 20200103E03.dgn

LAST SAVED BY: jdbriones Model: Layout1 ColorTable: gshade.ctb DesignScript: Carollo_Std_Pen_v0905.pen PlotScale: 1:1 User: svcPW Plot Date: 10-FEB-2025 2:38:33 PM

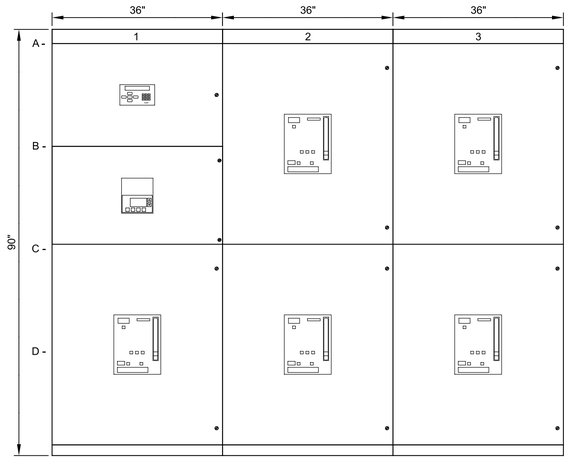

FRONT VIEW

SCALE: 3/4"=1'-0"
FILE: 20200103E0621

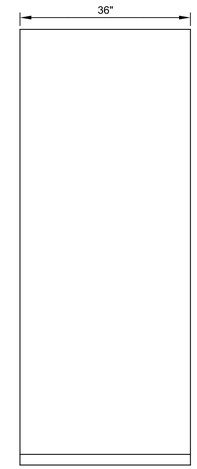

SIDE VIEW

SCALE: 3/4"=1'-0"
FILE: 20200103E0621

GENERAL NOTES:

1. PROVIDE NEMA 3R ENCLOSURE.

1A- SPD

1B- POWER METER

1C- MAIN BREAKER

2A- MCC-CL CHLORINE BUILDING MCC

2C- MCC-CS CAUSTIC SODA BUILDING MCC

3A- SPARE BREAKER

3C- SPARE BREAKER

REV	DATE	BY	DESCRIPTION
			BID SET

DESIGNED SKB
DRAWN NCS
CHECKED GCE
DATE FEBRUARY 2025

REGISTERED PROFESSIONAL ENGINEER No. 5329023 GUY C. EHLERS STATE OF UTAH

carollo®

JORDAN VALLEY WATER CONSERVANCY DISTRICT

JORDAN VALLEY WATER TREATMENT PLANT
FILTER AND CHEMICAL FEED UPGRADES
ELECTRICAL
SWBD-CS ELEVATION

VERIFY SCALES
BAR IS ONE INCH ON ORIGINAL DRAWING
0 1"
IF NOT ONE INCH ON THIS SHEET, ADJUST SCALES ACCORDINGLY

JOB NO. 202001.10
DRAWING NO. 03E04
SHEET NO. 300 OF 531

PROJECT NO. 202001-100000 FILE NAME: 20200103E04.dgn

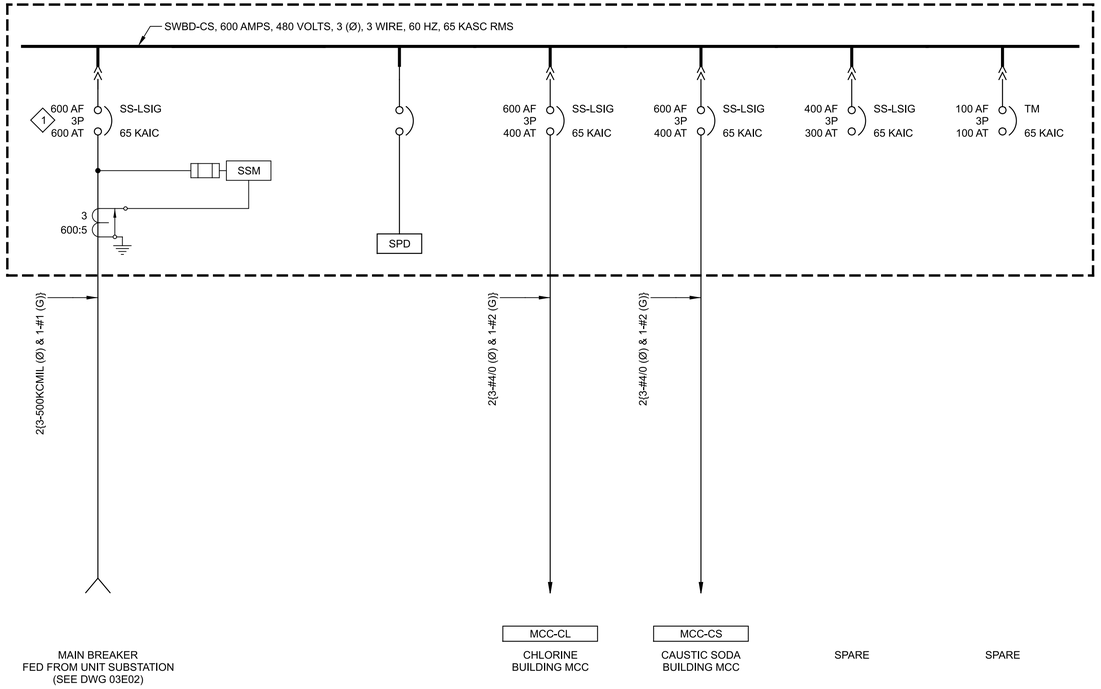

KEY NOTES:

1. 100% RATED BREAKER.

REV	DATE	BY	DESCRIPTION
			BID SET

DESIGNED SKB
DRAWN NCS
CHECKED GCE
DATE FEBRUARY 2025

REGISTERED PROFESSIONAL ENGINEER
No. 5329023
GUY C. EHLERS
STATE OF UTAH

carollo®

JORDAN VALLEY WATER
CONSERVANCY DISTRICT

JORDAN VALLEY WATER TREATMENT PLANT
FILTER AND CHEMICAL FEED UPGRADES
ELECTRICAL
SWBD-CS ONE-LINE DIAGRAM

VERIFY SCALES
BAR IS ONE INCH ON ORIGINAL DRAWING
0 1"
IF NOT ONE INCH ON THIS SHEET, ADJUST SCALES ACCORDINGLY

JOB NO. 202001.10
DRAWING NO. 03E05
SHEET NO. 301 OF 531

PROJECT NO. 202001-100000 FILE NAME: 20200103E05.dgn

Plot Date: 10-FEB-2025 2:38:58 PM
User: svcPW
PlotScale: 1:1
DesignScript: Carollo_Std_Pen_v0905.pen
ColorTable: gshade.ctb
Model: Layout1
LAST SAVED BY: CRollins

FRONT VIEW

SCALE: NO SCALE
FILE: 20200103DE0621

GENERAL NOTES:

1. EXISTING EQUIPMENT IS WESTINGHOUSE FIVE STAR MOTOR CONTROL CENTER. ITEM NUMBER SL-57900 IT.004 FVC, DATED SEP. 86

1 KEY NOTES:

1. REMOVE MCC BUCKET WITH METERS AND CTS AND DELIVER TO OWNER.

1A- MAIN METERING	2AL- MCC-S	3A- PNL-CC	4A- SPARE STARTER	5A- XFMR PNL-DDA PNL-DDA	6AL- WATER HEATER	7A- RWP-1801 PILOT PLANT PMP-A15	8A- SPACE	9A- ~~KWB-4201 AIR SCOUR BLOWER WEST~~	10A- BWP-4109 SMALL BACKWASH PUMP EAST
	2AR- PNL-G				6AR- SPARE BREAKER				
1D- MAIN LUGS ONLY	2C- MCC-N	3CL- XFMR PNL-AA PNL-AA	4EL- XFMR PNL-DD PNL-DD	5C- LCP NEW LAB HVAC	6C- CHP-9511 HEATING SYSTEM PUMP NORTH PMP-A17	7C- ~~CBP-6361 CHLORINE BOOSTER PUMP WEST~~	8C- SPACE	9G- SPACE	10E- 30 KVAC CAPACITOR FOR 9F
		3CR- SPARE BREAKER	4ER- XFMR PNL-FF PNL-FF						
	2E- LCP-CH-9501 CHILLER CONTROL PANEL	3E- XFMR PNL-SP PNL-SP	4GL- XFMR PNL-FGA PNL-FGA	5E- SPACE	6EL- LCP CARBON TRANSFER PUMP	7G- EXHAUST FAN NORTH	8E- 1 ~~WEST/EAST AIR BLOWER METERING~~	9I- 15 KVAC CAPACITOR FOR 10O	10G- ~~AWB-4211 AIR SCOUR BLOWER EAST~~
			4GR- AC FAN UNIT		6ER- SPARE BREAKER				
	2H- INCOMING CABLES ONLY	3GL- ~~BACKWASH TANK ISOLATION VALVE~~	4IL- LCP SUMP PUMP	5G- TIE CIRCUIT TO MCC-A1	6G- XFMR PNL-SNO PNL-SNO	7I- EXHAUST FAN SOUTH	8G- ~~BWP-4101 BACKWASH PUMP SOUTH~~	9K- 25 KVAC CAPACITOR FOR 10U	
		3GR- WEST FILTER GALLERY CRANE	4IR- LCP PEC TRANS PUMP						
		3IL- XFMR PNL-FGN PNL-FGN	4K- 25 KVAC CAPACITOR FOR 5K	5K- 15 KVAC CAPACITOR FOR 5F	6J- SPACE	7K- 5 KVAC CAPACITOR FOR 7F			
		3IR- XFMR PNL-FGS PNL-FGS							
		3K- 25 KVAC CAPACITOR FOR 6M			6K- 15 KVAC CAPACITOR FOR 6G				

REV	DATE	BY	DESCRIPTION
			BID SET

DESIGNED SKB
DRAWN NCS
CHECKED GCE
DATE FEBRUARY 2025

Digitally signed by Guy C. Ehlers
Date: 2025.02.10 14:29:07 -07'00'
REGISTERED PROFESSIONAL ENGINEER
No. 5329023
GUY C. EHLERS
STATE OF UTAH

carollo®

JORDAN VALLEY WATER CONSERVANCY DISTRICT

JORDAN VALLEY WATER TREATMENT PLANT
FILTER AND CHEMICAL FEED UPGRADES
ELECTRICAL
MCC-A ELEVATION - DEMOLITION

VERIFY SCALES
BAR IS ONE INCH ON ORIGINAL DRAWING
0 1"
IF NOT ONE INCH ON THIS SHEET, ADJUST SCALES ACCORDINGLY

JOB NO. 202001.10
DRAWING NO. 03E06
SHEET NO. 302 OF 531

LAST SAVED BY: mhood
Model: Layout1 ColorTable: gshade.ctb DesignScript: Carollo_Std_Pen_v0905.pen PlotScale: 1:1
User: svcPW Plot Date: 10-FEB-2025 2:35:18 PM

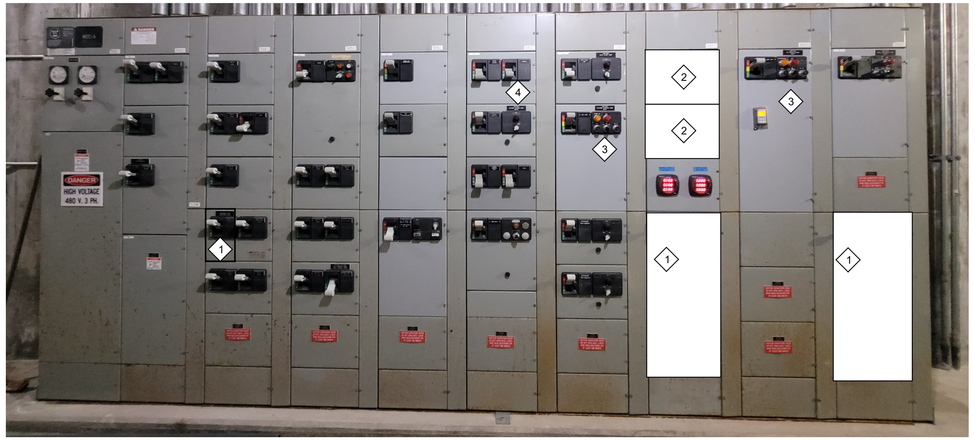

FRONT VIEW

SCALE: NO SCALE
FILE: 20200103E0622

1A-	MAIN METERING	2AL-	MCC-S	3A-	PNL-CC	4A-	SPARE STARTER	5A-	XFMR PNL-DDA PNL-DDA	6AL-	WATER HEATER	7A-	RWP-1801 PILOT PLANT PMP-A15	8A-	PMP-3911 FILTER DRAIN PUMP 1	9A-	SPARE RVSS	10A-	BWP-4109 SMALL BACKWASH PUMP EAST
		2AR-	PNL-G							6AR-	FV-4411 MASTER FILTER TO WASTE VALVE								
1D-	MAIN LUGS ONLY	2C-	MCC-N	3CL-	XFMR PNL-AA PNL-AA	4EL-	XFMR PNL-DD PNL-DD	5C-	LCP NEW LAB HVAC	6C-	CHP-9511 HEATING SYSTEM PUMP NORTH PMP-A17	7C-	SPARE STARTER	8C-	PMP-3921 FILTER DRAIN PUMP 2	9G-	SPACE	10E-	30 KVAC CAPACITOR FOR 9F
				3CR-	SPARE BREAKER	4ER-	XFMR PNL-FF PNL-FF												
		2E-	LCP-CH-9501 CHILLER CONTROL PANEL	3E-	XFMR PNL-SP PNL-SP	4GL-	XFMR PNL-FGA PNL-FGA	5E-	SPACE	6EL-	LCP CARBON TRANSFER PUMP	7G-	EXHAUST FAN NORTH	8E-	WEST/EAST AIR BLOWER METERING	9I-	15 KVAC CAPACITOR FOR 10O	10G-	SWBD-APF MCC-BL (FEED 2)
						4GR-	AC FAN UNIT			6ER-	SPARE BREAKER								
		2H-	INCOMING CABLES ONLY	3GL-	FV-4031 BW STORAGE ISOLATION VALVE	4IL-	LCP SUMP PUMP	5G-	TIE CIRCUIT TO MCC-A1	6G-	XFMR PNL-SNO PNL-SNO	7I-	EXHAUST FAN SOUTH	8G-	PMP-4101 LARGE BACKWASH PUMP 1	9K-	25 KVAC CAPACITOR FOR 10U		
				3GR-	WEST FILTER GALLERY CRANE	4IR-	LCP PEC TRANS PUMP												
				3IL-	XFMR PNL-FGN PNL-FGN	4K-	25 KVAC CAPACITOR FOR 5K	5K-	15 KVAC CAPACITOR FOR 5F	6J-	SPACE	7K-	5 KVAC CAPACITOR FOR 7F						
				3IR-	XFMR PNL-FGS PNL-FGS														
				3K-	25 KVAC CAPACITOR FOR 6M					6K-	15 KVAC CAPACITOR FOR 6G								

GENERAL NOTES:

1. EXISTING EQUIPMENT IS WESTINGHOUSE FIVE STAR MOTOR CONTROL CENTER. ITEM NUMBER SL-57900 IT.004 FVC, DATED SEP. 86.

KEY NOTES:

1. PROVIDE NEW CIRCUIT BREAKER.
2. PROVIDE NEW STARTER.
3. PROVIDE NEW NAMEPLATE AND LABEL AS SPARE.
4. CONNECT NEW LOAD TO EXISTING CIRCUIT BREAKER.

REV	DATE	BY	DESCRIPTION
			BID SET

DESIGNED SKB
DRAWN NCS
CHECKED GCE
DATE FEBRUARY 2025

REGISTERED PROFESSIONAL ENGINEER No. 5329023 GUY C. EHLERS STATE OF UTAH

carollo®

JORDAN VALLEY WATER CONSERVANCY DISTRICT

JORDAN VALLEY WATER TREATMENT PLANT
FILTER AND CHEMICAL FEED UPGRADES
ELECTRICAL
MCC-A ELEVATION - MODIFICATIONS

VERIFY SCALES
BAR IS ONE INCH ON ORIGINAL DRAWING
0 1"
IF NOT ONE INCH ON THIS SHEET, ADJUST SCALES ACCORDINGLY

JOB NO. 202001.10
DRAWING NO. 03E07
SHEET NO. 303 OF 531

Plot Date: 10-FEB-2025 2:35:45 PM
User: svcPW
PlotScale: 1:1
DesignScript: Carollo_Std_Pen_v0905.pen
ColorTable: gshade.ctb
Model: Layout1
LAST SAVED BY: mhood

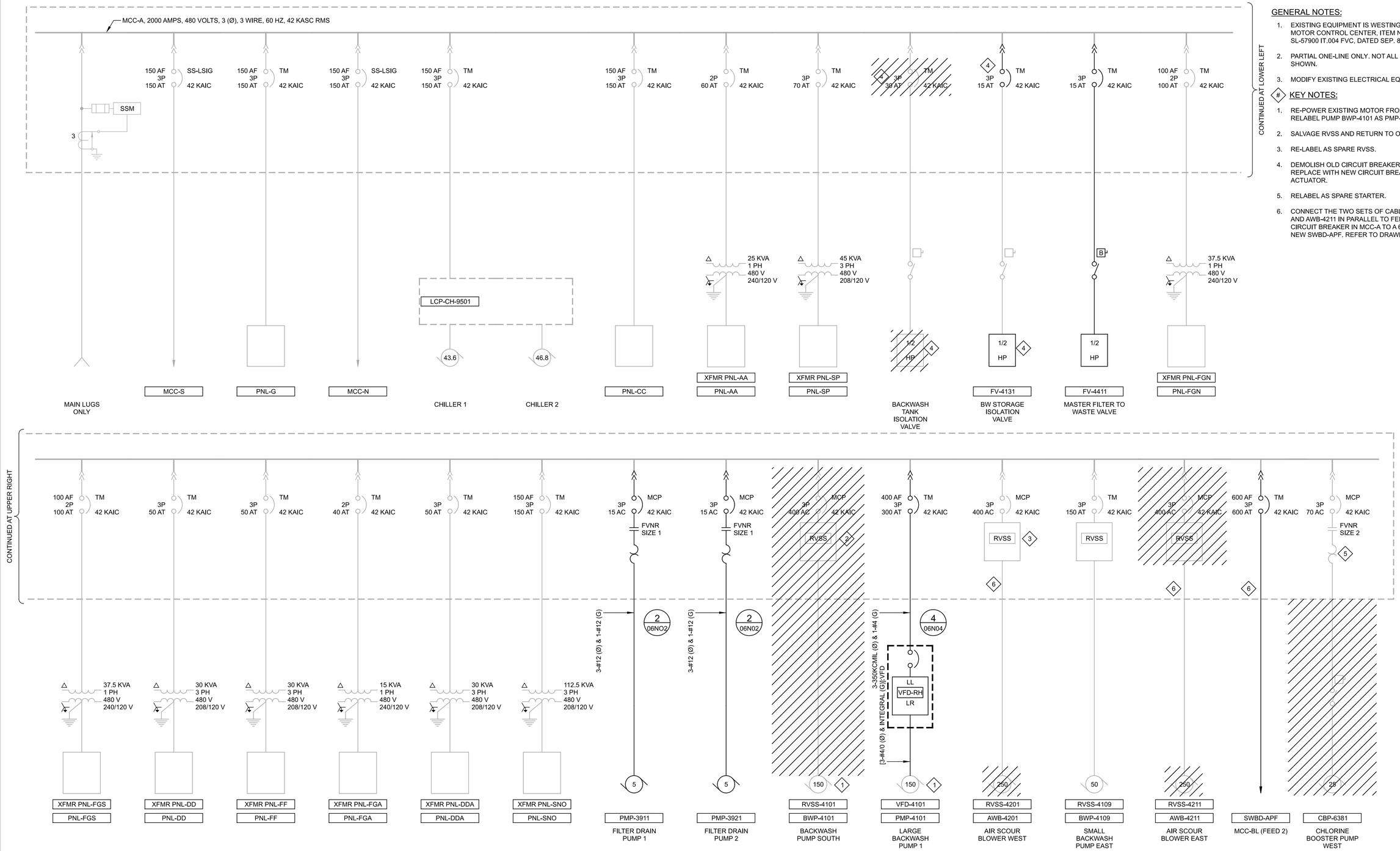

GENERAL NOTES:

1. EXISTING EQUIPMENT IS WESTINGHOUSE FIVE STAR MOTOR CONTROL CENTER, ITEM NUMBER SL-57900 IT.004 FVC, DATED SEP. 86.
2. PARTIAL ONE-LINE ONLY. NOT ALL EXISTING LOADS ARE SHOWN.
3. MODIFY EXISTING ELECTRICAL EQUIPMENT AS SHOWN.

KEY NOTES:

1. RE-POWER EXISTING MOTOR FROM NEW VFD. RELABEL PUMP BWP-4101 AS PMP-4101.
2. SALVAGE RVSS AND RETURN TO OWNER.
3. RE-LABEL AS SPARE RVSS.
4. DEMOLISH OLD CIRCUIT BREAKER, AND ACTUATOR. REPLACE WITH NEW CIRCUIT BREAKER, AND ACTUATOR.
5. RELABEL AS SPARE STARTER.
6. CONNECT THE TWO SETS OF CABLES FOR AWB-4201 AND AWB-4211 IN PARALLEL TO FEED FROM NEW 600A CIRCUIT BREAKER IN MCC-A TO A 600 AMP BREAKER IN NEW SWBD-APF. REFER TO DRAWING 03E02.

REV	DATE	BY	DESCRIPTION
			BID SET

DESIGNED SKB
DRAWN NCS
CHECKED GCE
DATE FEBRUARY 2025

Digitally signed by Guy C. Ehlers
Date: 2025.02.10 14:09:11 -07'00'
REGISTERED PROFESSIONAL ENGINEER No. 5329023 GUY C. EHLERS STATE OF UTAH

carollo

JORDAN VALLEY WATER CONSERVANCY DISTRICT

JORDAN VALLEY WATER TREATMENT PLANT
FILTER AND CHEMICAL FEED UPGRADES
ELECTRICAL
MCC-A PARTIAL ONE-LINE DIAGRAM

VERIFY SCALES
BAR IS ONE INCH ON ORIGINAL DRAWING
0 1"
IF NOT ONE INCH ON THIS SHEET, ADJUST SCALES ACCORDINGLY

JOB NO. 202001.10
DRAWING NO. 03E08
SHEET NO. 304 OF 531

PROJECT NO. 202001-100000 FILE NAME: 20200103E08.dgn

Plot Date: 10-FEB-2025 2:38:12 PM
User: svcPW
Model: Layout1 ColorTable: gshade.ctb DesignScript: Carollo_Std_Pen_v0905.pen PlotScale: 1:1
LAST SAVED BY: mhood

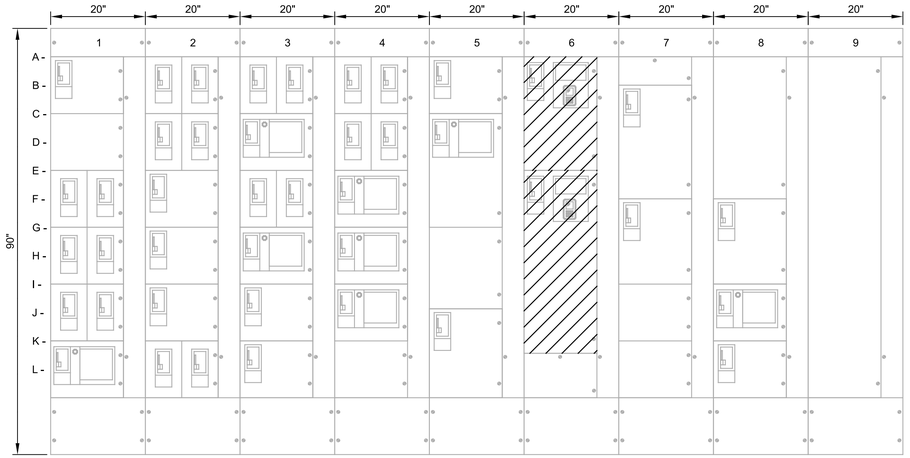

FRONT VIEW

SCALE: 3/4"=1'-0"
FILE: 20200103E0623

PHOTO

SCALE: NO SCALE
FILE: 20200103E0401

GENERAL NOTES:

1. EXISTING EQUIPMENT IS WESTINGHOUSE FIVE STAR MOTOR CONTROL CENTER, ITEM NUMBER SL-57700 IT.005 FVC, DATED SEP. 86.

1A- TIE CIRCUIT TO MCC-A	2AL- PP-1 FILTERS 7 AND 8	3AL- PP-6 FILTERS 1 AND 2	4AL- PP-8 FILTERS 5 AND 6	5A- US WEST CELL SITE	6A- ~~BWP-4108 SMALL BACKWASH PUMP WEST~~	7A- SPACE	8A- MAIN INCOMING AND METERING	9A- PULL SECTION
	2AR- PP-2 FILTERS 9 AND 10	3AR- PP-7 FILTERS 3 AND 4	4AR- POWER PANEL P-10 IN IOB (OUT OF SERVICE)					
1C- SPACE	2CL- XFMR PNL-EA PNL-EA	3C- SPARE STARTER	4CL- LCP-AIR-COMP	5C- ~~CBP-6282 CHLORINE BOOSTER PUMP EAST~~	6E- ~~BWP-4102 LARGE BACKWASH PUMP NORTH~~	7B- MCC-N1	8F- MCC-S1	
	2CR- XFMR PNL-EC PNL-EC		4CR- XFMR PNL-FGE-B PNL-FGE-B					
1EL- PP-3 FILTERS 11 AND 12	2E- AREA LIGHTING	3EL- SPARE BREAKER	4E- SPARE STARTER	5G- SPACE	6K- 25 KVAR CAPACITOR FOR 6K	7F- MCC-B1	8I- SPARE STARTER	
1ER- PP-4 FILTERS 13 AND 14		3ER- SPARE BREAKER						
1GL- PP-5 FILTERS 15 AND 16	2G- MCC-CDS	3G- SPARE STARTER	4G- PMP-A19 HEATING SYSTEM PUMP	5J- PNL-IVS-P INTERCONNECT VALVE STRUCTURE		7I- 20 KVAR CAPACITOR FOR 5K	8L- PNL-SBE SCREEN BUILDING	
1GR- XFMR-PNL-FGE PNL-FGE								
1IL- LCP-CTP-6803	2I- SPARE BREAKER	3I- VCP-LCP-BOILER LCP-BOILER	4I- PMP-A16 AC HEATING COIL PUMP			7K- 15 KVAR CAPACITOR FOR 6D		
1IR- LCP-CTP-6804								
1K- SPARE STARTER	2KL- PNL-DP-CSS	3K- LCP-ELEVATOR	4K- 18 KVAR CAPACITOR FOR 5E					
	2KR- PNL-DP-FS							

REV	DATE	BY	DESCRIPTION
			BID SET

DESIGNED SKB
DRAWN NCS
CHECKED GCE
DATE FEBRUARY 2025

Digitally signed by Guy C. Ehlers
Date: 2025.02.10 14:36:10 -07'00'
REGISTERED PROFESSIONAL ENGINEER
No. 5329023
GUY C. EHLERS
STATE OF UTAH

carollo®

JORDAN VALLEY WATER CONSERVANCY DISTRICT

JORDAN VALLEY WATER TREATMENT PLANT
FILTER AND CHEMICAL FEED UPGRADES
ELECTRICAL
MCC-A1 ELEVATION - DEMOLITION

VERIFY SCALES
BAR IS ONE INCH ON ORIGINAL DRAWING
0 1"
IF NOT ONE INCH ON THIS SHEET, ADJUST SCALES ACCORDINGLY

JOB NO. 202001.10
DRAWING NO. 03E09
SHEET NO. 305 OF 531

LAST SAVED BY: mhood
Model: Layout1 ColorTable: gshade.ctb DesignScript: Carollo_Std_Pen_v0905.pen PlotScale: 1:1
User: svcPW Plot Date: 10-FEB-2025 2:36:10 PM

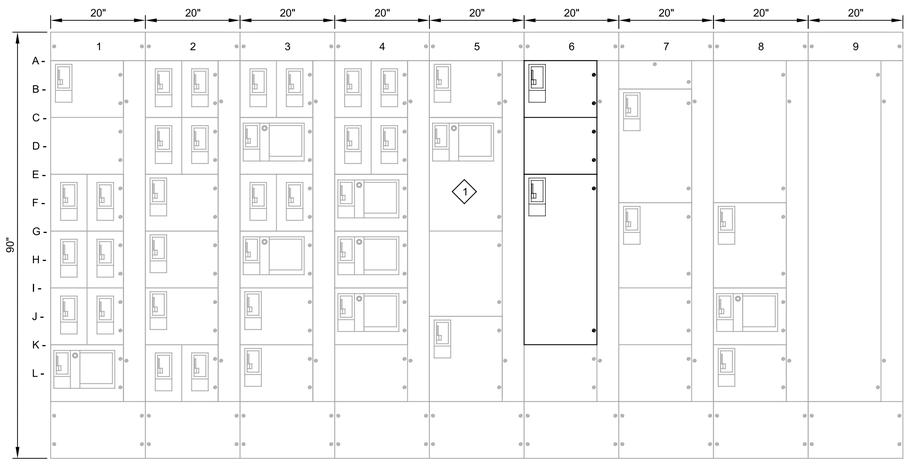

FRONT VIEW

SCALE: 3/4"=1'-0"
FILE:20200103E0623

PHOTO

SCALE: NO SCALE
FILE: 20200103E0402

GENERAL NOTES:

1. EXISTING EQUIPMENT IS WESTINGHOUSE FIVE STAR MOTOR CONTROL CENTER, ITEM NUMBER SL-57700 IT.005 FVC, DATED SEP. 86.

KEY NOTES:

1. PROVIDE NEW NAMEPLATE AND LABEL AS SPARE.

1A- TIE CIRCUIT TO MCC-A	2AL- PP-1 FILTERS 7 AND 8	3AL- PP-6 FILTERS 1 AND 2	4AL- PP-8 FILTERS 5 AND 6	5A- US WEST CELL SITE	6A- PMP-4104 SMALL BACKWASH PUMP 2	7A- SPACE	8A- MAIN INCOMING AND METERING	9A- PULL SECTION
	2AR- PP-2 FILTERS 9 AND 10	3AR- PP-7 FILTERS 3 AND 4	4AR- POWER PANEL P-10 IN IOB (OUT OF SERVICE)					
1C- SPACE	2CL- XFMR PNL-EA PNL-EA	3C- SPARE STARTER	4CL- LCP-AIR-COMP	5C- SPARE STARTER	6C- SPACE	7B- MCC-N1	8F- MCC-S1	
	2CR- XFMR PNL-EC PNL-EC		4CR- XFMR PNL-FGE-B PNL-FGE-B					
1EL- PP-3 FILTERS 11 AND 12	2E- AREA LIGHTING	3EL- SPARE BREAKER	4E- SPARE STARTER	5G- SPACE	6E- PMP-4102 LARGE BACKWASH PUMP 2	7F- MCC-B1	8I- SPARE STARTER	
1ER- PP-4 FILTERS 13 AND 14		3ER- SPARE BREAKER						
1GL- PP-5 FILTERS 15 AND 16	2G- MCC-CDS	3G- SPARE STARTER	4G- PMP-A19 HEATING SYSTEM PUMP	5J- PNL-IVS-P INTERCONNECT VALVE STRUCTURE	6K- 25 KVAR CAPACITOR FOR 6K	7I- 20 KVAR CAPACITOR FOR 5K	8L- PNL-SBE SCREEN BUILDING	
1GR- XFMR-PNL-FGE PNL-FGE								
1IL- LCP-CTP-6803	2I- SPARE BREAKER	3I- VCP-LCP-BOILER LCP-BOILER	4I- PMP-A16 AC HEATING COIL PUMP			7K- 15 KVAR CAPACITOR FOR 6D		
1IR- LCP-CTP-6804								
1K- SPARE STARTER	2KL- PNL-DP-CSS	3K- LCP-ELEVATOR	4K- 18 KVAR CAPACITOR FOR 5E					
	2KR- PNL-DP-FS							

REV	DATE	BY	DESCRIPTION
			BID SET

DESIGNED SKB
DRAWN NCS
CHECKED GCE
DATE FEBRUARY 2025

REGISTERED PROFESSIONAL ENGINEER No. 5329023 GUY C. EHLERS STATE OF UTAH

carollo®

JORDAN VALLEY WATER CONSERVANCY DISTRICT

JORDAN VALLEY WATER TREATMENT PLANT
FILTER AND CHEMICAL FEED UPGRADES
ELECTRICAL
MCC-A1 ELEVATION - MODIFICATIONS

VERIFY SCALES
BAR IS ONE INCH ON ORIGINAL DRAWING
0 1"
IF NOT ONE INCH ON THIS SHEET, ADJUST SCALES ACCORDINGLY

JOB NO. 202001.10
DRAWING NO. 03E10
SHEET NO. 306 OF 531

Plot Date: 10-FEB-2025 2:36:55 PM
User: svcPW
PlotScale: 1:1
DesignScript: Carollo_Std_Pen_v0905.pen
ColorTable: gshade.ctb
Model: Layout1
LAST SAVED BY: mhood

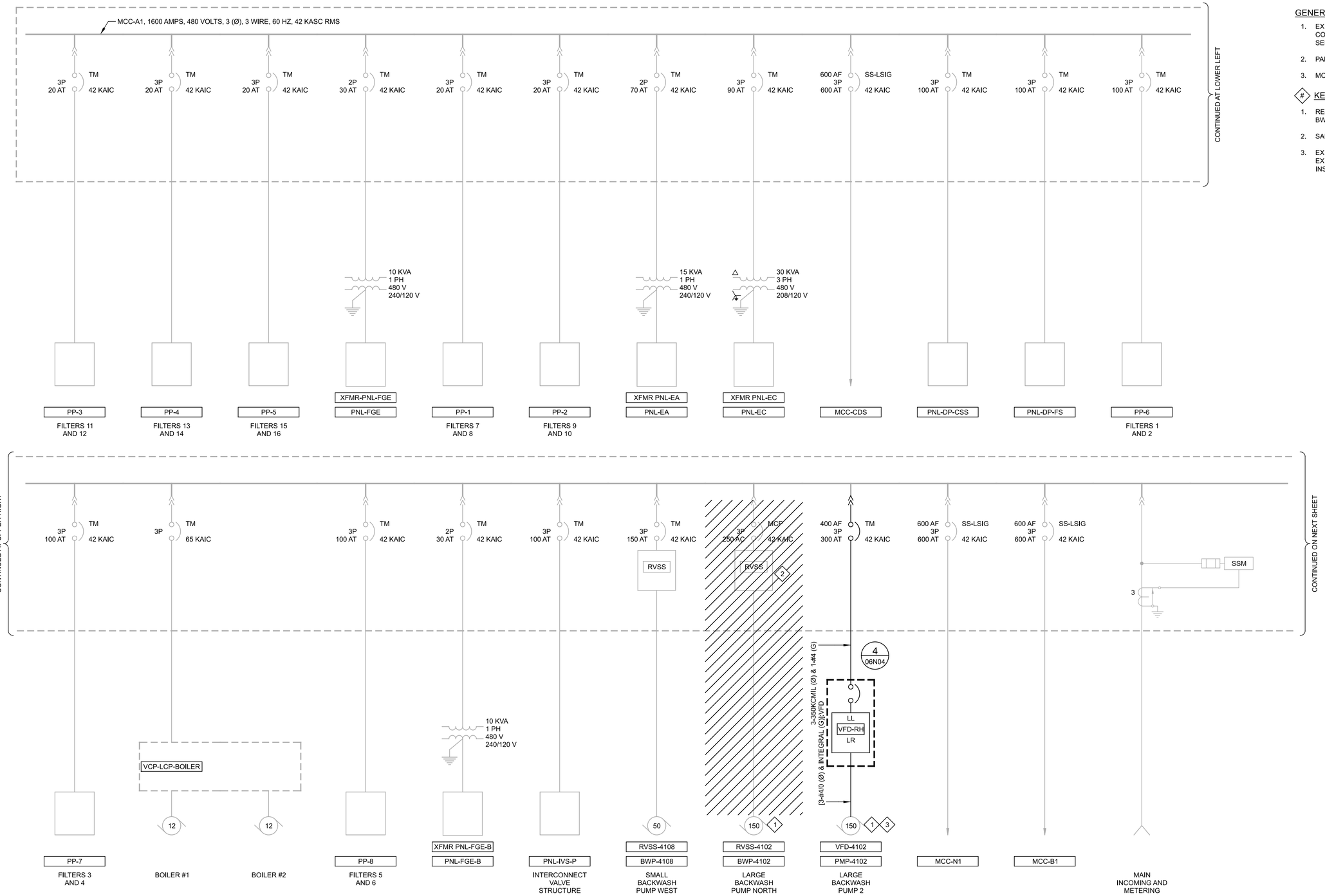

GENERAL NOTES:

1. EXISTING EQUIPMENT IS WESTINGHOUSE FIVE STAR MOTOR CONTROL CENTER, ITEM NUMBER SL-57700 IT.005 FVC, DATED SEP. 86.
2. PARTIAL ONE-LINE ONLY. NOT ALL EXISTING LOADS ARE SHOWN.
3. MODIFY EXISTING ELECTRICAL EQUIPMENT AS SHOWN.

KEY NOTES:

1. RE-POWER EXISTING MOTOR FROM NEW VFD. RELABEL PUMP BWP-4102 AS PMP-4102.
2. SALVAGE RVSS AND RETURN TO OWNER.
3. EXISTING MOTOR IS NOT INVERTER DUTY RATED. REWIND EXISTING MOTOR FOR INVERTER DUTY SERVICE WITH CLASS H INSULATION, OR PROVIDE NEW INVERTER DUTY RATED MOTOR.

REV	DATE	BY	DESCRIPTION
			BID SET

DESIGNED SKB
DRAWN NCS
CHECKED GCE
DATE FEBRUARY 2025

REGISTERED PROFESSIONAL ENGINEER No. 5329023 GUY C. EHLERS STATE OF UTAH

carollo

JORDAN VALLEY WATER CONSERVANCY DISTRICT

JORDAN VALLEY WATER TREATMENT PLANT
FILTER AND CHEMICAL FEED UPGRADES
ELECTRICAL
MCC-A1 PARTIAL ONE-LINE DIAGRAM 1

VERIFY SCALES
BAR IS ONE INCH ON ORIGINAL DRAWING
0 1"
IF NOT ONE INCH ON THIS SHEET, ADJUST SCALES ACCORDINGLY

JOB NO. 202001.10
DRAWING NO. 03E11
SHEET NO. 307 OF 531

PROJECT NO. 202001-100000 FILE NAME: 20200103E11.dgn

Plot Date: 10-FEB-2025 2:37:08 PM
User: svcPW
Model: Layout1 ColorTable: gshade.ctb DesignScript: Carollo_Std_Pen_v0905.pen PlotScale: 1:1
LAST SAVED BY: jdbriones

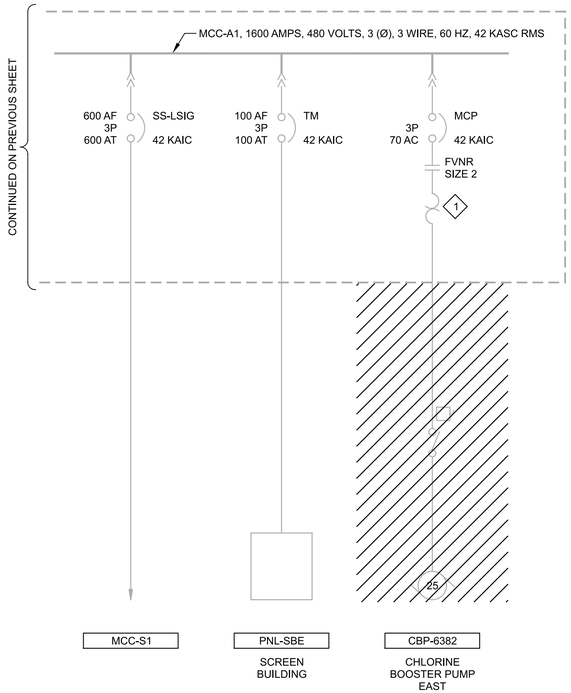

KEY NOTES:

1. RELABEL AS SPARE STARTER.

REV	DATE	BY	DESCRIPTION

BID SET

DESIGNED SKB
DRAWN NCS
CHECKED GCE
DATE FEBRUARY 2025

REGISTERED PROFESSIONAL ENGINEER
No. 5329023
GUY C. EHLERS
STATE OF UTAH

carollo

JORDAN VALLEY WATER
CONSERVANCY DISTRICT

JORDAN VALLEY WATER TREATMENT PLANT
FILTER AND CHEMICAL FEED UPGRADES
ELECTRICAL
MCC-A1 PARTIAL ONE-LINE DIAGRAM 2

VERIFY SCALES
BAR IS ONE INCH ON ORIGINAL DRAWING
0 1"
IF NOT ONE INCH ON THIS SHEET, ADJUST SCALES ACCORDINGLY

JOB NO. 202001.10
DRAWING NO. 03E12
SHEET NO. 308 OF 531

Plot Date: 10-FEB-2025 2:39:13 PM
User: svcPW
PlotScale: 1:1
DesignScript: Carollo_Std_Pen_v0905.pen
ColorTable: gshade.ctb
Model: Layout1
LAST SAVED BY: CRollins

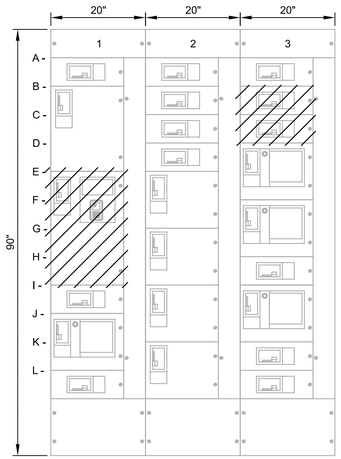

FRONT VIEW - EXISTING

SCALE: 3/4"=1'-0"
FILE: 20200103E0629

1A- DC POWER SUPPLY
1B- TVSS
~~1E- BLR-6391 EXISTING CL2 SCRUBBER BLOWER~~
1I- DC POWER SUPPLY
1J- GHWP-1
1L- MAIN BREAKER

2A- DC POWER SUPPLY
2B- SPARE
2C- ELECTRIC HOIST
~~2D- BWV-4116 MASTER BACKWASH VALVE~~
2E- FAN #1 CHLORINE STORAGE
2G- FAN #2 CHLORINE STORAGE
2I- FAN #3 CHLORINE STORAGE
2K- FAN #4 CHLORINE STORAGE

3A- DC POWER SUPPLY
~~3B- MX-6801~~
~~3C- MX-6802~~
3D- IN-FAN-NORTH
3F- IN-FAN-SOUTH
3I- GHWP-2
3K- XFMR-PNL-B1 PNL-B1
3L- XFMR-PNL-B2 PNL-B2

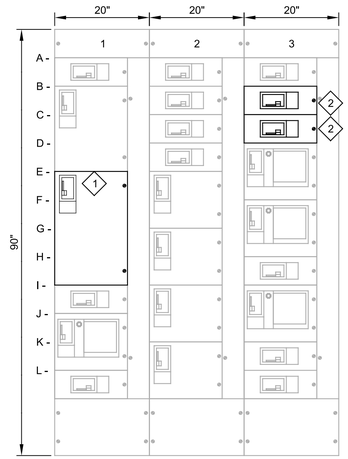

FRONT VIEW - EXISTING

SCALE: 3/4"=1'-0"
FILE: 20200103E0629

1A- DC POWER SUPPLY
1B- TVSS
1E- MCC-PEA
1I- DC POWER SUPPLY
1J- GHWP-1
1L- MAIN BREAKER

2A- DC POWER SUPPLY
2B- SPARE
2C- ELECTRIC HOIST
2D- FV-4041 MASTER BWS CONTROL VALVE
2E- FAN #1 CHLORINE STORAGE
2G- FAN #2 CHLORINE STORAGE
2I- FAN #3 CHLORINE STORAGE
2K- FAN #4 CHLORINE STORAGE

3A- DC POWER SUPPLY
3B- FV-4051 BWS NORTH (ODD) CONTROL VALVE (2)
3C- FV-4061 BWS SOUTH (EVE) CONTROL VALVE (2)
3D- IN-FAN-NORTH
3F- IN-FAN-SOUTH
3I- GHWP-2
3K- XFMR-PNL-B1 PNL-B1
3L- XFMR-PNL-B2 PNL-B2

GENERAL NOTES:

1. EXISTING EQUIPMENT IS AN EATON CUTLER-HAMMER FREEDOM SERIES 2100 MOTOR CONTROL CENTER, ORDER NUMBER SSL84454, IT.001 - POC, DATED 2/05.

KEY NOTES:

1. PROVIDE NEW BUCKET FOR NEW LOAD.
2. REPLACE TWO EXISTING 30AMP BREAKERS WITH EATON EGH3015FFG 15AMP BREAKERS.

REV	DATE	BY	DESCRIPTION

BID SET

DESIGNED SKB
DRAWN NCS
CHECKED GCE
DATE FEBRUARY 2025

REGISTERED PROFESSIONAL ENGINEER No. 5329023 GUY C. EHLERS STATE OF UTAH

carollo®

JORDAN VALLEY WATER CONSERVANCY DISTRICT

JORDAN VALLEY WATER TREATMENT PLANT
FILTER AND CHEMICAL FEED UPGRADES
ELECTRICAL
MCC-B1 ELEVATION

VERIFY SCALES
BAR IS ONE INCH ON ORIGINAL DRAWING
0 1"
IF NOT ONE INCH ON THIS SHEET, ADJUST SCALES ACCORDINGLY

JOB NO. 202001.10
DRAWING NO. 03E13
SHEET NO. 309 OF 531

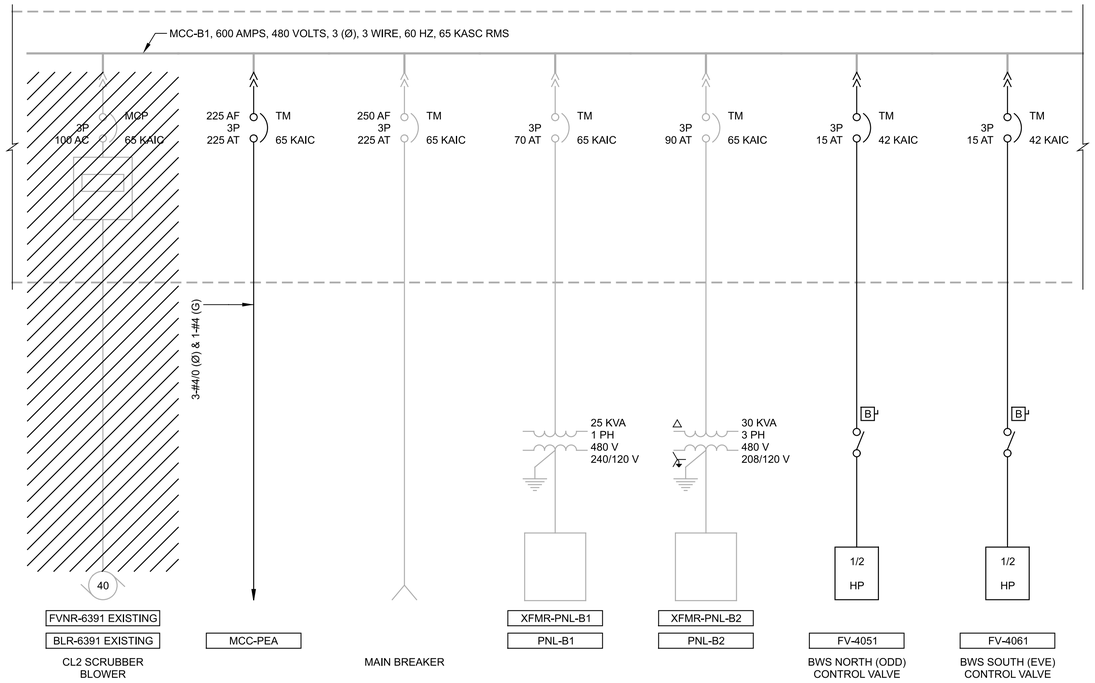

GENERAL NOTES:

1. PARTIAL ONE-LINE ONLY. NOT ALL EXISTING LOADS ARE SHOWN.

REV	DATE	BY	DESCRIPTION
			BID SET

DESIGNED SKB
DRAWN NCS
CHECKED GCE
DATE FEBRUARY 2025

Digitally signed by Guy C. Ehlers
REGISTERED PROFESSIONAL ENGINEER
No. 5329023
GUY C. EHLERS
STATE OF UTAH

carollo®

JORDAN VALLEY WATER
CONSERVANCY DISTRICT

JORDAN VALLEY WATER TREATMENT PLANT
FILTER AND CHEMICAL FEED UPGRADES
ELECTRICAL
MCC-B1 PARTIAL ONE-LINE DIAGRAM

VERIFY SCALES
BAR IS ONE INCH ON ORIGINAL DRAWING
0 1"
IF NOT ONE INCH ON THIS SHEET, ADJUST SCALES ACCORDINGLY

JOB NO. 202001.10
DRAWING NO. 03E14
SHEET NO. 310 OF 531

PROJECT NO. 202001-100000 FILE NAME: 20200103E14.dgn

Model: Layout1 ColorTable: gshade.ctb DesignScript: Carollo_Std_Pen_v0905.pen PlotScale: 1:1 Plot Date: 10-FEB-2025 2:35:31 PM User: svcPW LAST SAVED BY: mhood

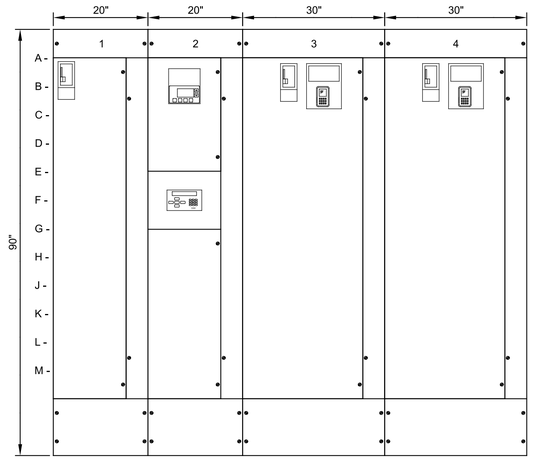

FRONT VIEW

SCALE: 3/4"=1'-0"
FILE: 20200103E0630

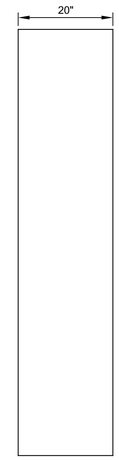

SIDE VIEW

SCALE: 3/4"=1'-0"
FILE: 20200103E0630

1A- MAIN BREAKER

2A- SPD

2C- POWER METER

2G- SPACE

3A- BLO-4201 AIR SCOUR BLOWER 1

4A- BLO-4211 AIR SCOUR BLOWER 2

REV	DATE	BY	DESCRIPTION
			BID SET

DESIGNED SKB
DRAWN NCS
CHECKED GCE
DATE FEBRUARY 2025

Digitally signed by Guy C. Ehlers
REGISTERED PROFESSIONAL ENGINEER
No. 5329023
GUY C. EHLERS
STATE OF UTAH

carollo®

JORDAN VALLEY WATER CONSERVANCY DISTRICT

JORDAN VALLEY WATER TREATMENT PLANT
FILTER AND CHEMICAL FEED UPGRADES
ELECTRICAL
MCC-BL ELEVATION

VERIFY SCALES
BAR IS ONE INCH ON ORIGINAL DRAWING
0 1"
IF NOT ONE INCH ON THIS SHEET, ADJUST SCALES ACCORDINGLY

JOB NO. 202001.10
DRAWING NO. 03E15
SHEET NO. 311 OF 531

PROJECT NO. 202001-100000 FILE NAME: 20200103E15.dgn

Plot Date: 10-FEB-2025 2:37:11 PM
User: svcPW
PlotScale: 1:1
DesignScript: Carollo_Std_Pen_v0905.pen
ColorTable: gshade.ctb
Model: Layout1
LAST SAVED BY: CRollins

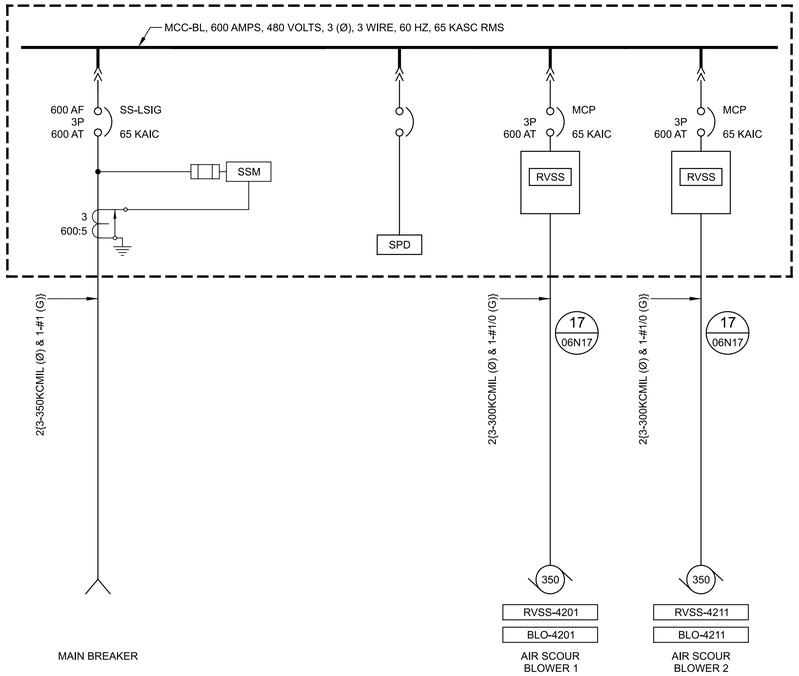

REV	DATE	BY	DESCRIPTION
			BID SET

DESIGNED SKB
DRAWN NCS
CHECKED GCE
DATE FEBRUARY 2025

Digitally signed by Guy C. Ehlers
REGISTERED PROFESSIONAL ENGINEER
No. 5329023
GUY C. EHLERS
STATE OF UTAH

carollo®

JORDAN VALLEY WATER
CONSERVANCY DISTRICT

JORDAN VALLEY WATER TREATMENT PLANT
FILTER AND CHEMICAL FEED UPGRADES
ELECTRICAL
MCC-BL ONE-LINE DIAGRAM

VERIFY SCALES
BAR IS ONE INCH ON ORIGINAL DRAWING
0 1"
IF NOT ONE INCH ON THIS SHEET, ADJUST SCALES ACCORDINGLY

JOB NO. 202001.10
DRAWING NO. 03E16
SHEET NO. 312 OF 531

PROJECT NO. 202001-100000 FILE NAME: 20200103E16.dgn

Model: Layout1 ColorTable: gshade.ctb DesignScript: Carollo_Std_Pen_v0905.pen PlotScale: 1:1 User: svcPW Plot Date: 10-FEB-2025 2:37:49 PM LAST SAVED BY: CRollins

FRONT VIEW

SCALE: NO SCALE
FILE: 20200103E0624

1A- PMP-6201 PRIMARY COAGULANT TRANSFER PUMP 1

1C- PMP-7741 CHLORINE DIOXIDE FEED PUMP NO. 1

1G- PMP-7742 CHLORINE DIOXIDE FEED PUMP NO. 2

1J- SPD

1K- MAIN BREAKER

2A- PMP-6202 PRIMARY COAGULANT TRANSFER PUMP 2

2C- MAU-01 PROCESS AREA

2E- EXF-01 EXHAUST FAN PROCESS AREA

2G- TR LP-CDS LP-CDS

3A- LP-CDS

3G- PMP-7705 SODIUM CHLORITE CHEMICAL CIRCULATION/TRANSFER PUMP

3I- BATTERY CHARGER FOR UNIT SUBSTATION

3J- SPACE

3K- OVERHEAD DOOR

GENERAL NOTES:

1. EXISTING EQUIPMENT IS A SQUARE D MODEL 6 MOTOR CONTROL CENTER, F.O. NUMBER 30177689-001. INSTALLED IN 1986 PROJECT.

KEY NOTES:

1. USE EXISTING EMPTY SPACE AND PROVIDE NEW STARTER BUCKET FOR THE NEW LOAD SHOWN HERE AND ON THE ONE-LINE DIAGRAM.

REV	DATE	BY	DESCRIPTION
			BID SET

DESIGNED SKB
DRAWN NCS
CHECKED GCE
DATE FEBRUARY 2025

REGISTERED PROFESSIONAL ENGINEER No. 5329023 GUY C. EHLERS STATE OF UTAH

carollo®

JORDAN VALLEY WATER CONSERVANCY DISTRICT

JORDAN VALLEY WATER TREATMENT PLANT
FILTER AND CHEMICAL FEED UPGRADES
ELECTRICAL
MCC-CDS ELEVATION

VERIFY SCALES
BAR IS ONE INCH ON ORIGINAL DRAWING
0 1"
IF NOT ONE INCH ON THIS SHEET, ADJUST SCALES ACCORDINGLY

JOB NO. 202001.10
DRAWING NO. 03E17
SHEET NO. 313 OF 531

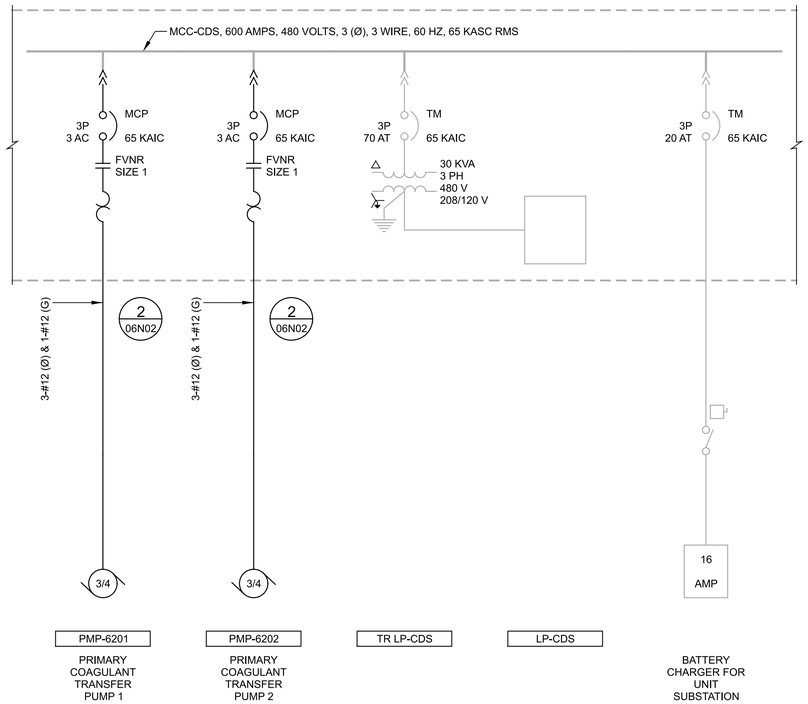

KEY NOTES:

1. PARTIAL ONE-LINE ONLY. NOT ALL EXISTING LOADS ARE SHOWN.
2. MODIFY EXISTING ELECTRICAL EQUIPMENT AS SHOWN.

REV	DATE	BY	DESCRIPTION
			BID SET

DESIGNED SKB
DRAWN NCS
CHECKED GCE
DATE FEBRUARY 2025

REGISTERED PROFESSIONAL ENGINEER
No. 5329023
GUY C. EHLERS
STATE OF UTAH

carollo

JORDAN VALLEY WATER
CONSERVANCY DISTRICT

JORDAN VALLEY WATER TREATMENT PLANT
FILTER AND CHEMICAL FEED UPGRADES
ELECTRICAL
MCC-CDS PARTIAL ONE-LINE DIAGRAM

VERIFY SCALES
BAR IS ONE INCH ON ORIGINAL DRAWING
0 1"
IF NOT ONE INCH ON THIS SHEET, ADJUST SCALES ACCORDINGLY

JOB NO. 202001.10
DRAWING NO. 03E18
SHEET NO. 314 OF 531

Plot Date: 10-FEB-2025 2:36:56 PM
User: svcPW
PlotScale: 1:1
DesignScript: Carollo_Std_Pen_v0905.pen
ColorTable: gshade.ctb
Model: Layout1
LAST SAVED BY: CRollins

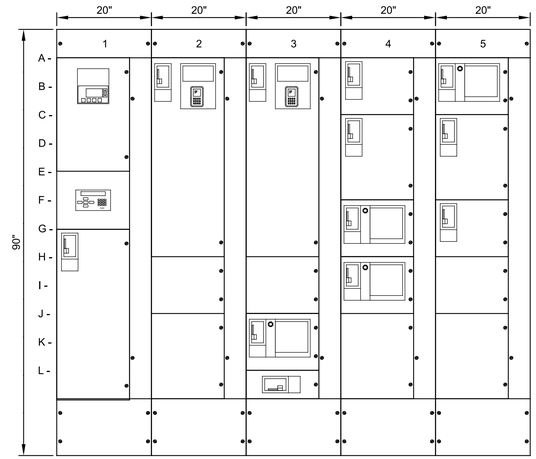

FRONT VIEW

SCALE: 3/4"=1'-0"
FILE: 20200103E0625

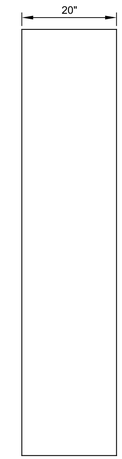

SIDE VIEW

SCALE: 3/4"=1'-0"
FILE: 20200103E0625

1A- SPD	2A- BLR-6391 CHLORINE SCRUBBER BLOWER 1	3A- BLR-6392 CHLORINE SCRUBBER BLOWER 2	4A- UPS-CL	5A- CHLORINE BRIDGE CRANE
1E- POWER METER	2H- SPACE	3H- SPACE	4C- PP-PAC	5C- PP-CL
1G- MAIN BREAKER	2J- SPACE	3J- EF-6356 STORAGE EXHAUST FAN	4F- SPARE SIZE 1 STARTER	5F- XFMR-CL PNL-CL
			4H- EF-6355 STORAGE EXHAUST FAN	5J- SPACE
		3L- SPARE BREAKER	4J- SPACE	5H- SPACE

REV	DATE	BY	DESCRIPTION
			BID SET

DESIGNED SKB
DRAWN NCS
CHECKED GCE
DATE FEBRUARY 2025

Digitally signed by Guy C. Ehlers
REGISTERED PROFESSIONAL ENGINEER
No. 5329023
GUY C. EHLERS
STATE OF UTAH

carollo®

JORDAN VALLEY WATER CONSERVANCY DISTRICT

JORDAN VALLEY WATER TREATMENT PLANT
FILTER AND CHEMICAL FEED UPGRADES
ELECTRICAL
MCC-CL ELEVATION

VERIFY SCALES
BAR IS ONE INCH ON ORIGINAL DRAWING
0 1"
IF NOT ONE INCH ON THIS SHEET, ADJUST SCALES ACCORDINGLY

JOB NO. 202001.10
DRAWING NO. 03E19
SHEET NO. 315 OF 531

PROJECT NO. 202001-100000 FILE NAME: 20200103E19.dgn

LAST SAVED BY: CRollins Model: Layout1 ColorTable: gshade.ctb DesignScript: Carollo_Std_Pen_v0905.pen PlotScale: 1:1 Plot Date: 10-FEB-2025 2:39:44 PM User: svcPW

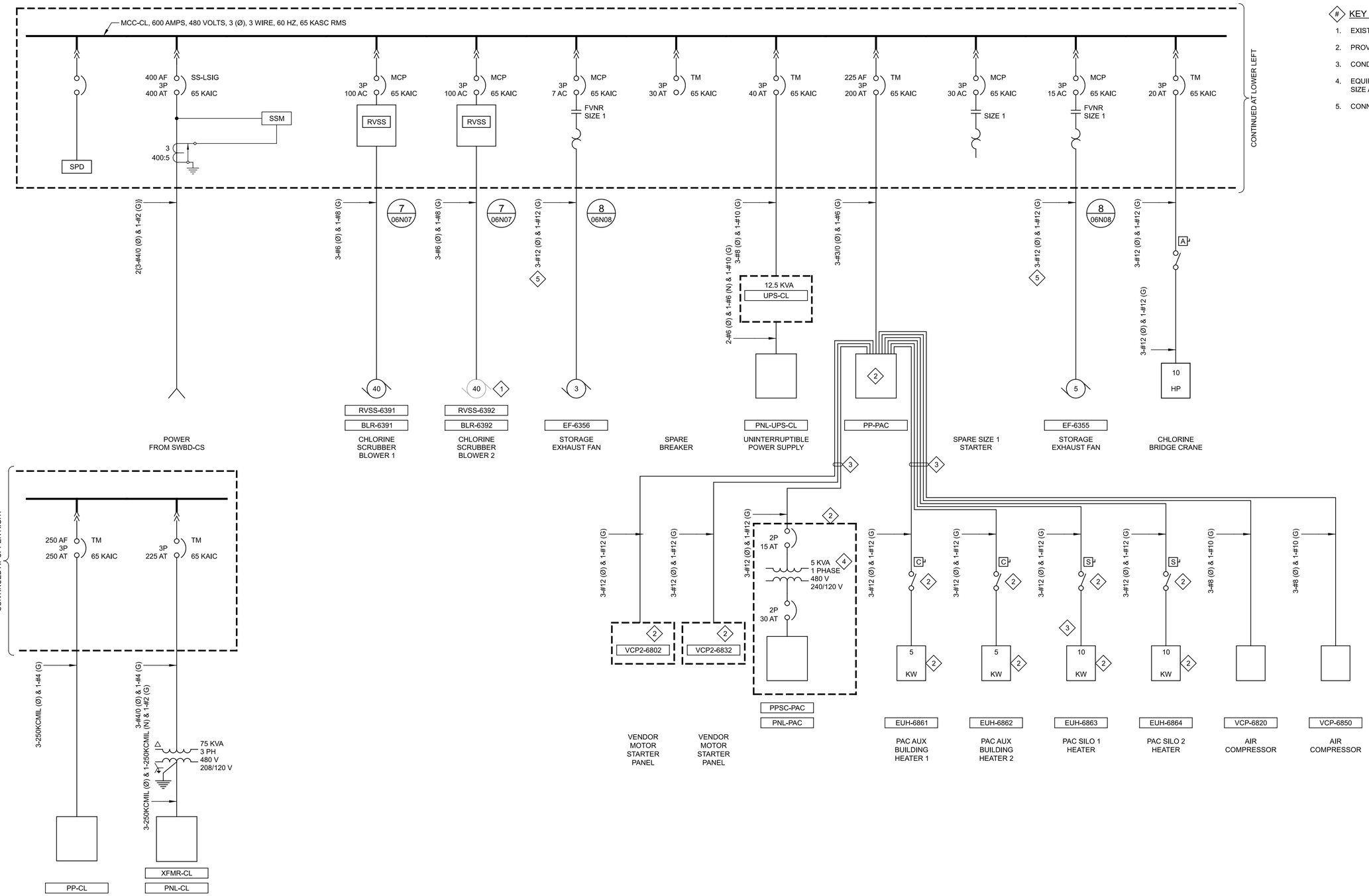

KEY NOTES:

1. EXISTING, RELOCATED CHLORINE SCRUBBER.
2. PROVIDED BY PAC SYSTEM SUPPLIER.
3. CONDUIT AND WIRE ARE PROVIDED BY THE PAC SYSTEM SUPPLIER.
4. EQUIPMENT KVA RATING IS SHOWN, HOWEVER PAC SUPPLIER SHALL SIZE AND PROVIDE TRANSFORMER AND PANELBOARD.
5. CONNECT POWER TO INTEGRAL DISCONNECT ON HVAC EQUIPMENT.

REV	DATE	BY	DESCRIPTION
			BID SET

DESIGNED SKB
DRAWN NCS
CHECKED GCE
DATE FEBRUARY 2025

REGISTERED PROFESSIONAL ENGINEER No. 5329023 GUY C. EHLERS STATE OF UTAH

carollo®

JORDAN VALLEY WATER CONSERVANCY DISTRICT

JORDAN VALLEY WATER TREATMENT PLANT
FILTER AND CHEMICAL FEED UPGRADES
ELECTRICAL
MCC-CL ONE-LINE DIAGRAM

VERIFY SCALES
BAR IS ONE INCH ON ORIGINAL DRAWING
0 1"
IF NOT ONE INCH ON THIS SHEET, ADJUST SCALES ACCORDINGLY

JOB NO. 202001.10
DRAWING NO. 03E20
SHEET NO. 316 OF 531

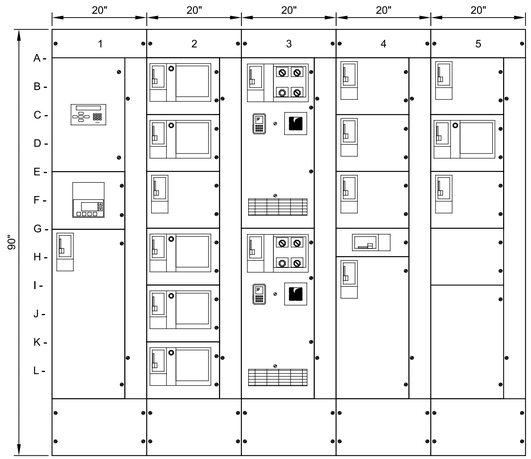

FRONT VIEW

SCALE: 3/4"=1'-0"
FILE: 20200103E0626

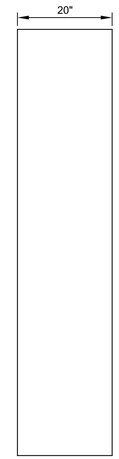

SIDE VIEW

SCALE: 3/4"=1'-0"
FILE: 20200103E0626

1A- SPD

1E- POWER METER

1G- MAIN BREAKER

2A- EF-6554 CAUSTIC STORAGE EXHAUST FAN

2C- EF-6555 CAUSTIC STORAGE EXHAUST FAN

2E- OHD-6511 OVERHEAD DOOR

2F- SPARE BREAKER

2G- PMP-6511 CAUSTIC SODA TRANSFER PUMP 1

2I- PMP-6521 CAUSTIC SODA TRANSFER PUMP 2

2K- SF-6556 SUPPLY FAN

3A- PMP-6572 CAUSTIC SODA LARGE FEED PUMP 1

3G- PMP-6582 CAUSTIC SODA LARGE FEED PUMP 2

4A- PP-CS

4C- UPS-CS UNINTERRUPTIBLE POWER SUPPLY

4E- XFMR-CS PNL-CS

4G- PPU-6553 ELECTRICAL ROOM PPU

4H- SPARE BREAKER

5A- SPARE BREAKER

5C- SPARE SIZE 1 STARTER

5E- SPARE

5G- SPACE

5I- SPACE

REV	DATE	BY	DESCRIPTION
			BID SET

DESIGNED SKB
DRAWN NCS
CHECKED GCE
DATE FEBRUARY 2025

REGISTERED PROFESSIONAL ENGINEER No. 5329023 GUY C. EHLERS STATE OF UTAH

carollo®

JORDAN VALLEY WATER CONSERVANCY DISTRICT

JORDAN VALLEY WATER TREATMENT PLANT
FILTER AND CHEMICAL FEED UPGRADES
ELECTRICAL
MCC-CS ELEVATION

VERIFY SCALES
BAR IS ONE INCH ON ORIGINAL DRAWING
0 1"
IF NOT ONE INCH ON THIS SHEET, ADJUST SCALES ACCORDINGLY

JOB NO. 202001.10
DRAWING NO. 03E21
SHEET NO. 317 OF 531

PROJECT NO. 202001-100000 FILE NAME: 20200103E21.dgn

Plot Date: 10-FEB-2025 2:35:49 PM
User: svcPW
PlotScale: 1:1
DesignScript: Carollo_Std_Pen_v0905.pen
ColorTable: gshade.ctb
Model: Layout1
LAST SAVED BY: CRollins

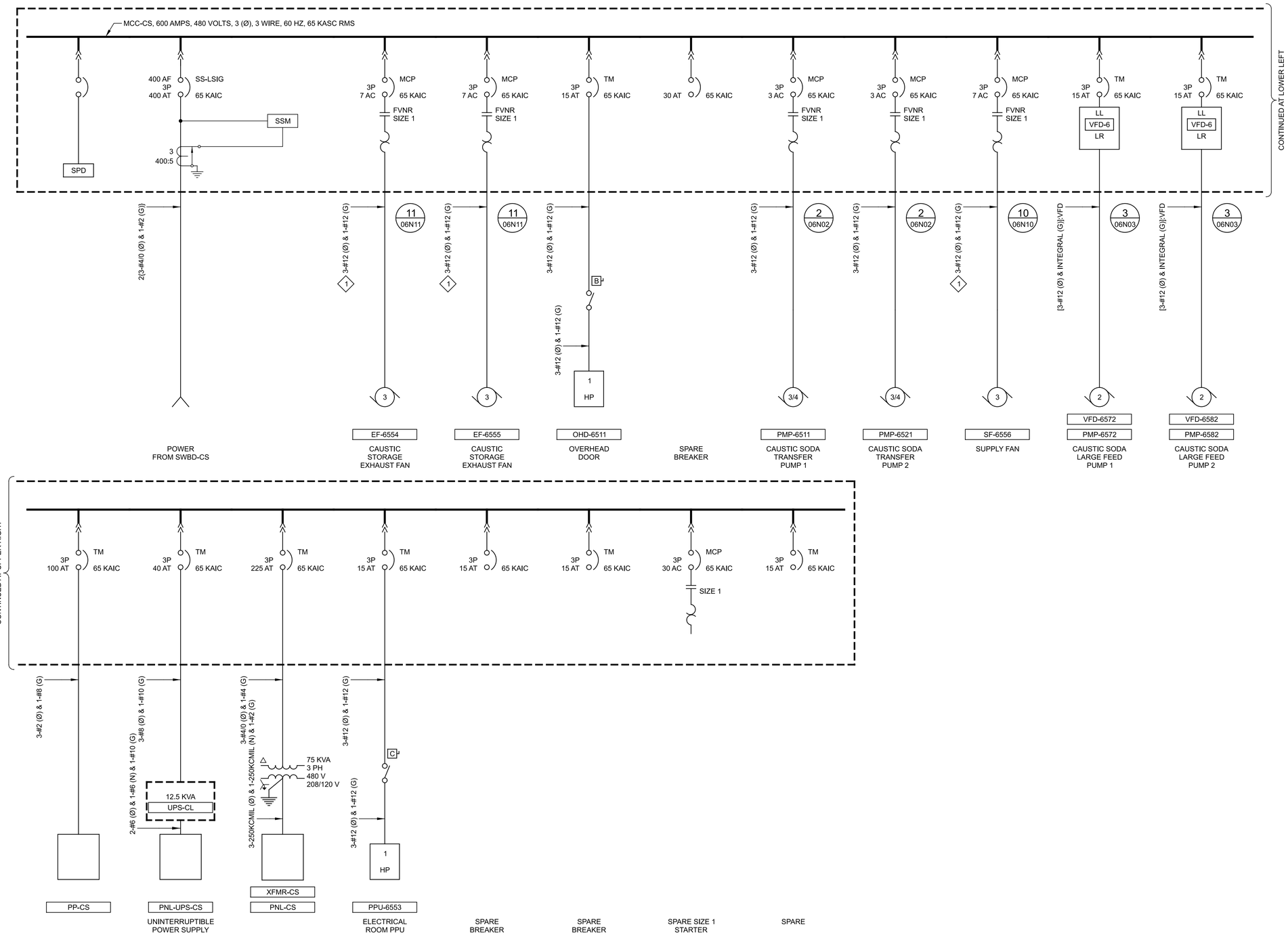

KEY NOTES:

1. CONNECT POWER TO INTEGRAL DISCONNECT ON HVAC EQUIPMENT.

REV	DATE	BY	DESCRIPTION
			BID SET

DESIGNED SKB
DRAWN NCS
CHECKED GCE
DATE FEBRUARY 2025

REGISTERED PROFESSIONAL ENGINEER No. 5329023 GUY C. EHLERS STATE OF UTAH

carollo®

JORDAN VALLEY WATER CONSERVANCY DISTRICT

JORDAN VALLEY WATER TREATMENT PLANT
FILTER AND CHEMICAL FEED UPGRADES
ELECTRICAL
MCC-CS ONE-LINE DIAGRAM

VERIFY SCALES
BAR IS ONE INCH ON ORIGINAL DRAWING
0 1"
IF NOT ONE INCH ON THIS SHEET, ADJUST SCALES ACCORDINGLY

JOB NO. 202001.10
DRAWING NO. 03E22
SHEET NO. 318 OF 531

PROJECT NO. 202001-100000 FILE NAME: 20200103E22.dgn

Plot Date: 10-FEB-2025 2:38:16 PM
User: svcPW
Model: Layout1 ColorTable: gshade.ctb DesignScript: Carollo_Std_Pen_v0905.pen PlotScale: 1:1
LAST SAVED BY: NKillian

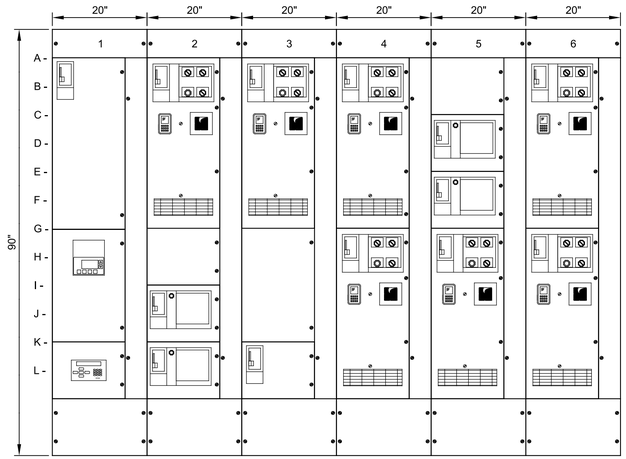

FRONT VIEW

SCALE: 3/4"=1'-0"
FILE: 20200103E0628

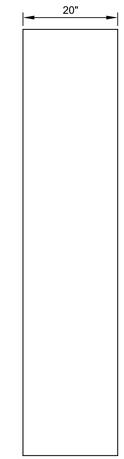

SIDE VIEW

SCALE: 3/4"=1'-0"
FILE: 20200103E0628

1A- MAIN BREAKER

2A- PMP-6931
PEA FLOC AID
FEED PUMP 1

3A- PMP-6926
PEA FILTER
AID LARGE
FEED PUMP 2

4A- PMP-6951
PEA STANDBY
FEED PUMP

5A- SPACE

6A- PMP-6941
PEA FLOC AID
FEED PUMP 3

1G- SPD

2G- SPACE

3G- SPACE

4G- PMP-6921
PEA FILTER
AID LARGE
FEED PUMP 1

5C- EF-6961
EXHAUST FAN

6G- PMP-6946
PEA FLOC AID
FEED PUMP 4

1K- POWER METER

2I- PMP-7103
PEC TRANSFER
PUMP 1

3K- XFMR-PEA
PNL-PEA

4K- PP-PEA

5E- EF-6962
EXHAUST FAN

2K- PMP-7104
PEC TRANSFER
PUMP 2

5G- PMP-6936
PEA FLOC AID
FEED PUMP 2

REV	DATE	BY	DESCRIPTION
			BID SET

DESIGNED SKB
DRAWN NCS
CHECKED GCE
DATE FEBRUARY 2025

Digitally signed by Guy C. Ehlers
REGISTERED PROFESSIONAL ENGINEER
No. 5329023
GUY C. EHLERS
STATE OF UTAH

carollo®

JORDAN VALLEY WATER
CONSERVANCY DISTRICT

JORDAN VALLEY WATER TREATMENT PLANT
FILTER AND CHEMICAL FEED UPGRADES
ELECTRICAL
MCC-PEA ELEVATION

VERIFY SCALES
BAR IS ONE INCH ON ORIGINAL DRAWING
0 1"
IF NOT ONE INCH ON THIS SHEET, ADJUST SCALES ACCORDINGLY

JOB NO. 202001.10
DRAWING NO. 03E23
SHEET NO. 319 OF 531

PROJECT NO. 202001-100000 FILE NAME: 20200103E23.dgn

LAST SAVED BY: CRollins Model: Layout1 ColorTable: gshade.ctb DesignScript: Carollo_Std_Pen_v0905.pen PlotScale: 1:1 Plot Date: 10-FEB-2025 2:37:10 PM User: svcPW

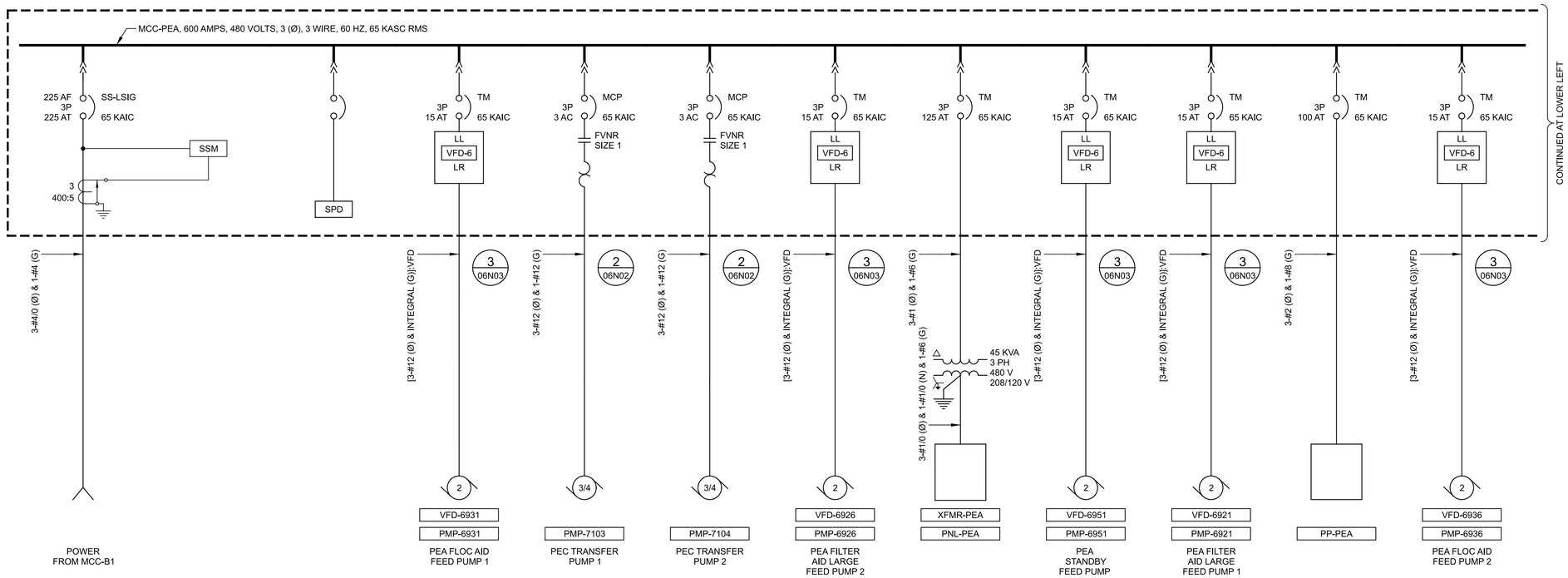

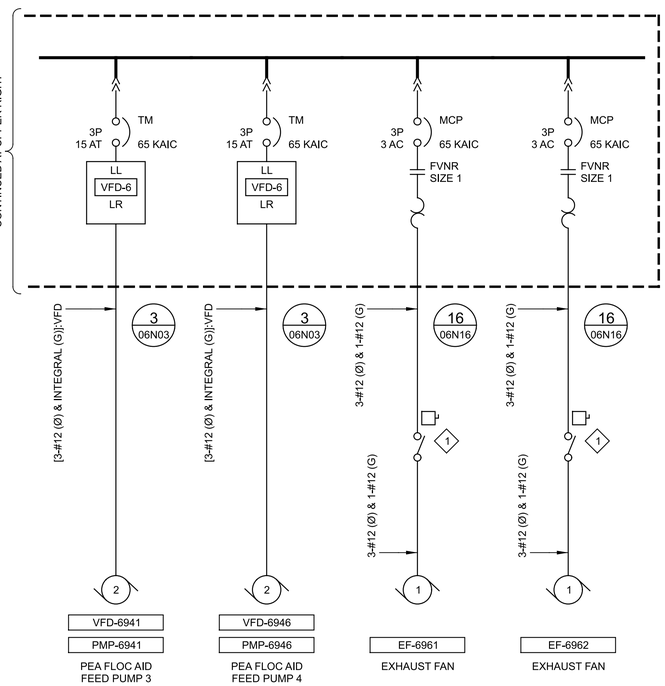

KEY NOTES:

1. DISCONNECT PROVIDED AS A PART OF HVAC EQUIPMENT.

REV	DATE	BY	DESCRIPTION

BID SET

DESIGNED SKB
DRAWN NCS
CHECKED GCE
DATE FEBRUARY 2025

REGISTERED PROFESSIONAL ENGINEER — No. 5329023 — GUY C. EHLERS — STATE OF UTAH

carollo®

JORDAN VALLEY WATER CONSERVANCY DISTRICT

JORDAN VALLEY WATER TREATMENT PLANT
FILTER AND CHEMICAL FEED UPGRADES
ELECTRICAL
MCC-PEA ONE-LINE DIAGRAM

VERIFY SCALES
BAR IS ONE INCH ON ORIGINAL DRAWING
0 — 1"
IF NOT ONE INCH ON THIS SHEET, ADJUST SCALES ACCORDINGLY

JOB NO. 202001.10
DRAWING NO. 03E24
SHEET NO. 320 OF 531

GENERAL NOTES:

1. VALVE ACTUATORS ON EXISTING PANELBOARDS TO BE REPLACED AND RE-POWERED FROM THE SAME CIRCUIT.

KEY NOTES:

1. EXISTING PANELBOARD.

PANEL PP-1

1/24/2025 (1)

LOCATION: FILTERS
VOLTS: 480
PHASE & WIRE: 3 PH 3W
INTERRUPT: 10 KAIC

NEMA: 1
FEED: TOP
MTG. SURFACE
BUS RATING: 225
MAIN: CB
MAIN RATING: 250 AF 225 AT

PH A WEIGHTED VA 4728
PH B WEIGHTED VA 4728
PH C WEIGHTED VA 4728
EQUIP SIZING VA 14183
PANEL AMPS 17.1

I/C/S	DESCRIPTION	LOAD (VA)	BKR	CIR	Ø	CIR	BKR	LOAD (VA)	DESCRIPTION	I/C/S
C		305		1	A	2		305		C
C	FV-3081 - FILTER 8 INLET VALVE	305	15A-3P	3	B	4	15A-3P	305	FV-3071 - FILTER 7 INLET VALVE	C
C		305		5	C	6		305		C
C		305		7	A	8		305		C
C	FV-3082 - FILTER 8 EFFLUENT VALVE	305	15A-3P	9	B	10	15A-3P	305	FV-3072 - FILTER 7 EFFLUENT VALVE	C
C		305		11	C	12		305		C
I		305		13	A	14		305		I
I	FV-3084 - FILTER 8 BACKWASH VALVE	305	15A-3P	15	B	16	15A-3P	305	FV-3074 - FILTER 7 BACKWASH VALVE	I
I		305		17	C	18		305		I
I		305		19	A	20		305		I
I	FV-3087 - FILTER 8 WASTE WASHWATER VALVE	305	15A-3P	21	B	22	15A-3P	305	FV-3077 - FILTER 7 WASTE WASHWATER VALVE	I
I		305		23	C	24		305		I
C		305		25	A	26		305		C
C	FV-3083 - FILTER 8 FILTER TO WASTE VALVE	305	15A-3P	27	B	28	15A-3P	305	FV-3073 - FILTER 7 FILTER TO WASTE VALVE	C
C		305		29	C	30		305		C
I		305		31	A	32		305		I
I	FV-3085 - FILTER 8 AIR SCOUR VALVE	305	15A-3P	33	B	34	15A-3P	305	FV-3075 - FILTER 7 AIR SCOUR VALVE	I
I		305		35	C	36		305		I
I		305		37	A	38		305		I
I	FV-3086 - FILTER 8 VENT VALVE	305	15A-3P	39	B	40	15A-3P	305	FV-3076 - FILTER 7 VENT VALVE	I
I		305		41	C	42		305		I

PANEL PP-2

1/24/2025 (1)

LOCATION: FILTERS
VOLTS: 480
PHASE & WIRE: 3 PH 3W
INTERRUPT: 10 KAIC

NEMA: 1
FEED: TOP
MTG. SURFACE
BUS RATING: 225
MAIN: CB
MAIN RATING: 250 AF 225 AT

PH A WEIGHTED VA 4728
PH B WEIGHTED VA 4728
PH C WEIGHTED VA 4728
EQUIP SIZING VA 14183
PANEL AMPS 17.1

I/C/S	DESCRIPTION	LOAD (VA)	BKR	CIR	Ø	CIR	BKR	LOAD (VA)	DESCRIPTION	I/C/S
C		305		1	A	2		305		C
C	FV-3101 - FILTER 10 INLET VALVE	305	15A-3P	3	B	4	15A-3P	305	FV-3091 - FILTER 9 INLET VALVE	C
C		305		5	C	6		305		C
C		305		7	A	8		305		C
C	FV-3102 - FILTER 10 EFFLUENT VALVE	305	15A-3P	9	B	10	15A-3P	305	FV-3092 - FILTER 9 EFFLUENT VALVE	C
C		305		11	C	12		305		C
I		305		13	A	14		305		I
I	FV-3104 - FILTER 10 BACKWASH VALVE	305	15A-3P	15	B	16	15A-3P	305	FV-3094 - FILTER 9 BACKWASH VALVE	I
I		305		17	C	18		305		I
I		305		19	A	20		305		I
I	FV-3107 - FILTER 10 WASTE WASHWATER VALVE	305	15A-3P	21	B	22	15A-3P	305	FV-3097 - FILTER 9 WASTE WASHWATER VALVE	I
I		305		23	C	24		305		I
C		305		25	A	26		305		C
C	FV-3103 - FILTER 10 FILTER TO WASTE VALVE	305	15A-3P	27	B	28	15A-3P	305	FV-3093 - FILTER 9 FILTER TO WASTE VALVE	C
C		305		29	C	30		305		C
I		305		31	A	32		305		I
I	FV-3105 - FILTER 10 AIR SCOUR VALVE	305	15A-3P	33	B	34	15A-3P	305	FV-3095 - FILTER 9 AIR SCOUR VALVE	I
I		305		35	C	36		305		I
I		305		37	A	38		305		I
I	FV-3106 - FILTER 10 VENT VALVE	305	15A-3P	39	B	40	15A-3P	305	FV-3096 - FILTER 9 VENT VALVE	I
I		305		41	C	42		305		I

PANEL PP-3

1/24/2025 (1)

LOCATION: FILTERS
VOLTS: 480
PHASE & WIRE: 3 PH 3W
INTERRUPT: 10 KAIC

NEMA: 1
FEED: TOP
MTG. SURFACE
BUS RATING: 225
MAIN: CB
MAIN RATING: 250 AF 225 AT

PH A WEIGHTED VA 4728
PH B WEIGHTED VA 4728
PH C WEIGHTED VA 4728
EQUIP SIZING VA 14183
PANEL AMPS 17.1

I/C/S	DESCRIPTION	LOAD (VA)	BKR	CIR	Ø	CIR	BKR	LOAD (VA)	DESCRIPTION	I/C/S
C		305		1	A	2		305		C
C	FV-3121 - FILTER 12 INLET VALVE	305	15A-3P	3	B	4	15A-3P	305	FV-3111 - FILTER 11 INLET VALVE	C
C		305		5	C	6		305		C
C		305		7	A	8		305		C
C	FV-3122 - FILTER 12 EFFLUENT VALVE	305	15A-3P	9	B	10	15A-3P	305	FV-3112 - FILTER 11 EFFLUENT VALVE	C
C		305		11	C	12		305		C
I		305		13	A	14		305		I
I	FV-3124 - FILTER 12 BACKWASH VALVE	305	15A-3P	15	B	16	15A-3P	305	FV-3114 - FILTER 11 BACKWASH VALVE	I
I		305		17	C	18		305		I
I		305		19	A	20		305		I
I	FV-3127 - FILTER 12 WASTE WASHWATER VALVE	305	15A-3P	21	B	22	15A-3P	305	FV-3117 - FILTER 11 WASTE WASHWATER VALVE	I
I		305		23	C	24		305		I
C		305		25	A	26		305		C
C	FV-3123 - FILTER 12 FILTER TO WASTE VALVE	305	15A-3P	27	B	28	15A-3P	305	FV-3113 - FILTER 11 FILTER TO WASTE VALVE	C
C		305		29	C	30		305		C
I		305		31	A	32		305		I
I	FV-3125 - FILTER 12 AIR SCOUR VALVE	305	15A-3P	33	B	34	15A-3P	305	FV-3115 - FILTER 11 AIR SCOUR VALVE	I
I		305		35	C	36		305		I
I		305		37	A	38		305		I
I	FV-3126 - FILTER 12 VENT VALVE	305	15A-3P	39	B	40	15A-3P	305	FV-3116 - FILTER 11 VENT VALVE	I
I		305		41	C	42		305		I

REV	DATE	BY	DESCRIPTION
			BID SET

DESIGNED SKB
DRAWN MNH
CHECKED GCE
DATE FEBRUARY 2025

REGISTERED PROFESSIONAL ENGINEER No. 5329023 GUY C. EHLERS STATE OF UTAH

carollo®

JORDAN VALLEY WATER CONSERVANCY DISTRICT

JORDAN VALLEY WATER TREATMENT PLANT
FILTER AND CHEMICAL FEED UPGRADES
ELECTRICAL
PANELBOARD SCHEDULE 1

VERIFY SCALES
BAR IS ONE INCH ON ORIGINAL DRAWING
0 1"
IF NOT ONE INCH ON THIS SHEET, ADJUST SCALES ACCORDINGLY

JOB NO. 202001.10
DRAWING NO. 04E01
SHEET NO. 321 OF 531

GENERAL NOTES:

1. VALVE ACTUATORS ON EXISTING PANELBOARDS TO BE REPLACED AND RE-POWERED FROM THE SAME CIRCUIT.

KEY NOTES:

1. EXISTING PANELBOARD.

PANEL PP-4

1/24/2025 (1)

LOCATION: FILTERS
VOLTS: 480
PHASE & WIRE 3 PH 3W
INTERRUPT: 10 KAIC

NEMA: 1
FEED: TOP
MTG. SURFACE
BUS RATING: 225
MAIN: CB
MAIN RATING: 250 AF 225 AT

PH A WEIGHTED VA 4728
PH B WEIGHTED VA 4728
PH C WEIGHTED VA 4728
EQUIP SIZING VA 14183
PANEL AMPS 17.1

I/C/S	DESCRIPTION	LOAD (VA)	BKR	CIR	Ø	CIR	BKR	LOAD (VA)	DESCRIPTION	I/C/S
C		305		1	A	2		305		C
C	FV-3141 - FILTER 14 INLET VALVE	305	15A-3P	3	B	4	15A-3P	305	FV-3131 - FILTER 13 INLET VALVE	C
C		305		5	C	6		305		C
C		305		7	A	8		305		C
C	FV-3142 - FILTER 14 EFFLUENT VALVE	305	15A-3P	9	B	10	15A-3P	305	FV-3132 - FILTER 13 EFFLUENT VALVE	C
C		305		11	C	12		305		C
I		305		13	A	14		305		I
I	FV-3144 - FILTER 14 BACKWASH VALVE	305	15A-3P	15	B	16	15A-3P	305	FV-3134 - FILTER 13 BACKWASH VALVE	I
I		305		17	C	18		305		I
I		305		19	A	20		305		I
I	FV-3147 - FILTER 14 WASTE WASHWATER VALVE	305	15A-3P	21	B	22	15A-3P	305	FV-3137 - FILTER 13 WASTE WASHWATER VALVE	I
I		305		23	C	24		305		I
C		305		25	A	26		305		C
C	FV-3143 - FILTER 14 FILTER TO WASTE VALVE	305	15A-3P	27	B	28	15A-3P	305	FV-3133 - FILTER 13 FILTER TO WASTE VALVE	C
C		305		29	C	30		305		C
I		305		31	A	32		305		I
I	FV-3145 - FILTER 14 AIR SCOUR VALVE	305	15A-3P	33	B	34	15A-3P	305	FV-3135 - FILTER 13 AIR SCOUR VALVE	I
I		305		35	C	36		305		I
I		305		37	A	38		305		I
I	FV-3146 - FILTER 14 VENT VALVE	305	15A-3P	39	B	40	15A-3P	305	FV-3136 - FILTER 13 VENT VALVE	I
I		305		41	C	42		305		I

PANEL PP-5

1/24/2025 (1)

LOCATION: FILTERS
VOLTS: 480
PHASE & WIRE 3 PH 3W
INTERRUPT: 10 KAIC

NEMA: 1
FEED: TOP
MTG. SURFACE
BUS RATING: 225
MAIN: CB
MAIN RATING: 250 AF 225 AT

PH A WEIGHTED VA 4728
PH B WEIGHTED VA 4728
PH C WEIGHTED VA 4728
EQUIP SIZING VA 14183
PANEL AMPS 17.1

I/C/S	DESCRIPTION	LOAD (VA)	BKR	CIR	Ø	CIR	BKR	LOAD (VA)	DESCRIPTION	I/C/S
C		305		1	A	2		305		C
C	FV-3161 - FILTER 16 INLET VALVE	305	15A-3P	3	B	4	15A-3P	305	FV-3151 - FILTER 15 INLET VALVE	C
C		305		5	C	6		305		C
C		305		7	A	8		305		C
C	FV-3162 - FILTER 16 EFFLUENT VALVE	305	15A-3P	9	B	10	15A-3P	305	FV-3152 - FILTER 15 EFFLUENT VALVE	C
C		305		11	C	12		305		C
I		305		13	A	14		305		I
I	FV-3164 - FILTER 16 BACKWASH VALVE	305	15A-3P	15	B	16	15A-3P	305	FV-3154 - FILTER 15 BACKWASH VALVE	I
I		305		17	C	18		305		I
I		305		19	A	20		305		I
I	FV-3167 - FILTER 16 WASTE WASHWATER VALVE	305	15A-3P	21	B	22	15A-3P	305	FV-3157 - FILTER 15 WASTE WASHWATER VALVE	I
I		305		23	C	24		305		I
C		305		25	A	26		305		C
C	FV-3163 - FILTER 16 FILTER TO WASTE VALVE	305	15A-3P	27	B	28	15A-3P	305	FV-3153 - FILTER 15 FILTER TO WASTE VALVE	C
C		305		29	C	30		305		C
I		305		31	A	32		305		I
I	FV-3165 - FILTER 16 AIR SCOUR VALVE	305	15A-3P	33	B	34	15A-3P	305	FV-3155 - FILTER 15 AIR SCOUR VALVE	I
I		305		35	C	36		305		I
I		305		37	A	38		305		I
I	FV-3166 - FILTER 16 VENT VALVE	305	15A-3P	39	B	40	15A-3P	305	FV-3156 - FILTER 15 VENT VALVE	I
I		305		41	C	42		305		I

PANEL PP-6

1/24/2025 (1)

LOCATION: FILTERS
VOLTS: 480
PHASE & WIRE 3 PH 3W
INTERRUPT: 35 KAIC

NEMA: 1
FEED: TOP
MTG. SURFACE
BUS RATING: 100
MAIN: MLO

PH A WEIGHTED VA 4728
PH B WEIGHTED VA 4728
PH C WEIGHTED VA 4728
EQUIP SIZING VA 14183
PANEL AMPS 17.1

I/C/S	DESCRIPTION	LOAD (VA)	BKR	CIR	Ø	CIR	BKR	LOAD (VA)	DESCRIPTION	I/C/S
C		305		1	A	2		305		C
C	FV-3011 - FILTER 1 INLET VALVE	305	15A-3P	3	B	4	15A-3P	305	FV-3021 - FILTER 2 INLET VALVE	C
C		305		5	C	6		305		C
C		305		7	A	8		305		C
C	FV-3012 - FILTER 1 EFFLUENT VALVE	305	15A-3P	9	B	10	15A-3P	305	FV-3022 - FILTER 2 EFFLUENT VALVE	C
C		305		11	C	12		305		C
I		305		13	A	14		305		I
I	FV-3014 - FILTER 1 BACKWASH VALVE	305	15A-3P	15	B	16	15A-3P	305	FV-3024 - FILTER 2 BACKWASH VALVE	I
I		305		17	C	18		305		I
I		305		19	A	20		305		I
I	FV-3017 - FILTER 1 WASTE WASHWATER VALVE	305	15A-3P	21	B	22	15A-3P	305	FV-3027 - FILTER 2 WASTE WASHWATER VALVE	I
I		305		23	C	24		305		I
C		305		25	A	26		305		C
C	FV-3013 - FILTER 1 FILTER TO WASTE VALVE	305	15A-3P	27	B	28	15A-3P	305	FV-3023 - FILTER 2 FILTER TO WASTE VALVE	C
C		305		29	C	30		305		C
I		305		31	A	32		305		I
I	FV-3015 - FILTER 1 AIR SCOUR VALVE	305	15A-3P	33	B	34	15A-3P	305	FV-3025 - FILTER 2 AIR SCOUR VALVE	I
I		305		35	C	36		305		I
I		305		37	A	38		305		I
I	FV-3016 - FILTER 1 VENT VALVE	305	15A-3P	39	B	40	15A-3P	305	FV-3026 - FILTER 2 VENT VALVE	I
I		305		41	C	42		305		I

REV	DATE	BY	DESCRIPTION
			BID SET

DESIGNED SKB
DRAWN MNH
CHECKED GCE
DATE FEBRUARY 2025

REGISTERED PROFESSIONAL ENGINEER No. 5329023 GUY C. EHLERS STATE OF UTAH

carollo

JORDAN VALLEY WATER CONSERVANCY DISTRICT

JORDAN VALLEY WATER TREATMENT PLANT
FILTER AND CHEMICAL FEED UPGRADES
ELECTRICAL
PANELBOARD SCHEDULE 2

VERIFY SCALES
BAR IS ONE INCH ON ORIGINAL DRAWING
0 1"
IF NOT ONE INCH ON THIS SHEET, ADJUST SCALES ACCORDINGLY

JOB NO. 202001.10
DRAWING NO. 04E02
SHEET NO. 322 OF 531

PANEL PP-7

1/27/2025 (1)

LOCATION: FILTERS
VOLTS: 480
PHASE & WIRE: 3 PH 3W
INTERRUPT: 35 KAIC

NEMA: 1
FEED: TOP
MTG. SURFACE
BUS RATING: 100
MAIN: MLO

PH A WEIGHTED VA 4728
PH B WEIGHTED VA 4728
PH C WEIGHTED VA 4728
EQUIP SIZING VA 14183
PANEL AMPS 17.1

I/C/S	DESCRIPTION	LOAD (VA)	BKR	CIR	Ø	CIR	BKR	LOAD (VA)	DESCRIPTION	I/C/S
C		305		1	A	2		305		C
C	FV-3031 - FILTER 3 INLET VALVE	305	15A-3P	3	B	4	15A-3P	305	FV-3041 - FILTER 4 INLET VALVE	C
C		305		5	C	6		305		C
C		305		7	A	8		305		C
C	FV-3032 - FILTER 3 EFFLUENT VALVE	305	15A-3P	9	B	10	15A-3P	305	FV-3042 - FILTER 4 EFFLUENT VALVE	C
C		305		11	C	12		305		C
I		305		13	A	14		305		I
I	FV-3034 - FILTER 3 BACKWASH VALVE	305	15A-3P	15	B	16	15A-3P	305	FV-3044 - FILTER 4 BACKWASH VALVE	I
I		305		17	C	18		305		I
I		305		19	A	20		305		I
I	FV-3037 - FILTER 3 WASTE WASHWATER VALVE	305	15A-3P	21	B	22	15A-3P	305	FV-3047 - FILTER 4 WASTE WASHWATER VALVE	I
I		305		23	C	24		305		I
C		305		25	A	26		305		C
C	FV-3033 - FILTER 3 FILTER TO WASTE VALVE	305	15A-3P	27	B	28	15A-3P	305	FV-3043 - FILTER 4 FILTER TO WASTE VALVE	C
C		305		29	C	30		305		C
I		305		31	A	32		305		I
I	FV-3035 - FILTER 3 AIR SCOUR VALVE	305	15A-3P	33	B	34	15A-3P	305	FV-3045 - FILTER 4 AIR SCOUR VALVE	I
I		305		35	C	36		305		I
I		305		37	A	38		305		I
I	FV-3036 - FILTER 3 VENT VALVE	305	15A-3P	39	B	40	15A-3P	305	FV-3046 - FILTER 4 VENT VALVE	I
I		305		41	C	42		305		I

PANEL PP-8

1/27/2025 (1)

LOCATION: FILTERS
VOLTS: 480
PHASE & WIRE: 3 PH 3W
INTERRUPT: 35 KAIC

NEMA: 1
FEED: TOP
MTG. SURFACE
BUS RATING: 100
MAIN: MLO

PH A WEIGHTED VA 4728
PH B WEIGHTED VA 4728
PH C WEIGHTED VA 4728
EQUIP SIZING VA 14183
PANEL AMPS 17.1

I/C/S	DESCRIPTION	LOAD (VA)	BKR	CIR	Ø	CIR	BKR	LOAD (VA)	DESCRIPTION	I/C/S
C		305		1	A	2		305		C
C	FV-3051 - FILTER 5 INLET VALVE	305	15A-3P	3	B	4	15A-3P	305	FV-3061 - FILTER 6 INLET VALVE	C
C		305		5	C	6		305		C
C		305		7	A	8		305		C
C	FV-3052 - FILTER 5 EFFLUENT VALVE	305	15A-3P	9	B	10	15A-3P	305	FV-3062 - FILTER 6 EFFLUENT VALVE	C
C		305		11	C	12		305		C
I		305		13	A	14		305		I
I	FV-3054 - FILTER 5 BACKWASH VALVE	305	15A-3P	15	B	16	15A-3P	305	FV-3064 - FILTER 6 BACKWASH VALVE	I
I		305		17	C	18		305		I
I		305		19	A	20		305		I
I	FV-3057 - FILTER 5 WASTE WASHWATER VALVE	305	15A-3P	21	B	22	15A-3P	305	FV-3067 - FILTER 6 WASTE WASHWATER VALVE	I
I		305		23	C	24		305		I
C		305		25	A	26		305		C
C	FV-3053 - FILTER 5 FILTER TO WASTE VALVE	305	15A-3P	27	B	28	15A-3P	305	FV-3063 - FILTER 6 FILTER TO WASTE VALVE	C
C		305		29	C	30		305		C
I		305		31	A	32		305		I
I	FV-3055 - FILTER 5 AIR SCOUR VALVE	305	15A-3P	33	B	34	15A-3P	305	FV-3065 - FILTER 6 AIR SCOUR VALVE	I
I		305		35	C	36		305		I
I		305		37	A	38		305		I
I	FV-3056 - FILTER 5 VENT VALVE	305	15A-3P	39	B	40	15A-3P	305	FV-3066 - FILTER 6 VENT VALVE	I
I		305		41	C	42		305		I

GENERAL NOTES:

1. VALVE ACTUATORS ON EXISTING PANELBOARDS TO BE REPLACED AND RE-POWERED FROM THE SAME CIRCUIT.

(#) KEY NOTES:

1. EXISTING PANELBOARD.

REV	DATE	BY	DESCRIPTION
			BID SET

DESIGNED SKB
DRAWN DJB
CHECKED GCE
DATE FEBRUARY 2025

REGISTERED PROFESSIONAL ENGINEER No. 5329023 GUY C. EHLERS STATE OF UTAH

carollo

JORDAN VALLEY WATER CONSERVANCY DISTRICT

JORDAN VALLEY WATER TREATMENT PLANT
FILTER AND CHEMICAL FEED UPGRADES
ELECTRICAL
PANELBOARD SCHEDULE 3

VERIFY SCALES
BAR IS ONE INCH ON ORIGINAL DRAWING
0 1"
IF NOT ONE INCH ON THIS SHEET, ADJUST SCALES ACCORDINGLY

JOB NO. 202001.10
DRAWING NO. 04E03
SHEET NO. 323 OF 531

Plot Date: 1/21/2025 12:01:22 PM
LAST SAVED BY: NKillian
PROJECT NO. 202001-100000 FILE NAME: 20200104E03.dwg

PANEL PP-CL

2/3/2025

LOCATION:	CHLORINE BUILDING	NEMA:	1	PH A WEIGHTED VA	10220
VOLTS:	480	FEED:	BOTTOM	PH B WEIGHTED VA	10220
PHASE & WIRE:	3 PH 3W	MTG.	SURFACE	PH C WEIGHTED VA	10220
INTERRUPT:	65 KAIC	BUS RATING:	250		
OPTIONS:	SPD	MAIN:	CB	EQUIP SIZING VA	30660
		MAIN RATING:	250 AF 250 AT	PANEL AMPS	36.9

I/C/S	DESCRIPTION	LOAD (VA)	BKR	CIR	Ø	CIR	BKR	LOAD (VA)	DESCRIPTION	I/C/S
				1	A	2		582		C
	SPARE		15A-3P	3	B	4	15A-3P	582	OHD-6312 - OVERHEAD DOOR 2	C
				5	C	6		582		C
				7	A	8				
	SPARE		15A-3P	9	B	10	15A-3P		SPARE	
				11	C	12				
				13	A	14		582		C
	SPARE		15A-3P	15	B	16	15A-3P	582	PPU-6353 - ELECTRICAL ROOM PPU	C
				17	C	18		582		C
				19	A	20			SPARE	
	SPARE		15A-3P	21	B	22	20A-3P		SPARE	
				23	C	24			SPARE	
				25	A	26			SPARE	
	SPARE		15A-3P	27	B	28	20A-3P		SPARE	
				29	C	30			SPARE	
C		6430		31	A	32			SPARE	
C	MAU-6354 - STORAGE MAKEUP AIR UNIT	6430	30A-3P	33	B	34	20A-3P		SPARE	
C		6430		35	C	36			SPARE	
C		582		37	A	38			SPARE	
C	OHD-6311 - OVERHEAD DOOR 1	582	15A-3P	39	B	40	20A-3P		SPARE	
C		582		41	C	42			SPARE	

PANEL PNL-CL

2/5/2025

LOCATION:	CHLORINE BUILDING	NEMA:	1	PH A WEIGHTED VA	17694
VOLTS:	208/120	FEED:	BOTTOM	PH B WEIGHTED VA	16906
PHASE & WIRE:	3 PH 4W	MTG.	SURFACE	PH C WEIGHTED VA	12405
INTERRUPT:	18 KAIC	BUS RATING:	250		
OPTIONS:	SPD	MAIN:	CB	EQUIP SIZING VA	53081
		MAIN RATING:	250 AF 250 AT	PANEL AMPS	147.3

I/C/S	DESCRIPTION	LOAD (VA)	BKR	CIR	Ø	CIR	BKR	LOAD (VA)	DESCRIPTION	I/C/S
C	AHU-6351 - ELECTRICAL ROOM AHU 1	104	15A-2P	1	A	2	15A-1P	600	LVR-6357 - CHLORINATOR ROOM LOUVER	C
C		104		3	B	4	15A-2P	562	SF-6368 - MECHANICAL SUPPLY FAN	C
C	AHU-6352 - ELECTRICAL ROOM AHU 2	104	15A-2P	5	C	6		562		C
C		104		7	A	8	15A-1P	480	TWH-6365 - TEPID WATER HEATER 1	C
C	HP-6351 - ELECTRICAL ROOM HP 1	1976	25A-2P	9	B	10	15A-1P	480	TWH-6366 - TEPID WATER HEATER 2	C
C		1976		11	C	12	15A-1P	480	TWH-6367 - TEPID WATER HEATER 3	C
C	HP-6352 - ELECTRICAL ROOM HP 2	1976	25A-2P	13	A	14	20A-1P		SPARE	
C		1976		15	B	16	20A-1P		SPARE	
C	EF-6357 - EXHAUST FAN CHLORINATOR ROOM	333	15A-2P	17	C	18	20A-1P		SPARE	
C		333		19	A	20	15A-1P	1176	PMP-6319 - CHLORINE BUILDING SUMP PUMP	C
C	GUH-6358 - CHEMICAL ROOM GAS UNIT HEATER 1	288	15A-1P	21	B	22	20A-1P	720	CHLORINE BUILDING ELECTRICAL/MECHANICAL ROOM RECEPTACLES	I
C	GUH-6359 - CHEMICAL ROOM GAS UNIT HEATER 2	288	15A-1P	23	C	24	20A-1P	1024	CHLORINE BUILDING LIGHTING	C
C	GUH-6360 - CHEMICAL ROOM GAS UNIT HEATER 3	288	15A-1P	25	A	26	20A-1P	937	CHLORINE BUILDING LIGHTING	C
C	GUH-6361 - CHEMICAL ROOM GAS UNIT HEATER 4	288	15A-1P	27	B	28	20A-1P	944	CHLORINE BUILDING LIGHTING	C
C	GUH-6362 - CHEMICAL ROOM GAS UNIT HEATER 5	672	15A-1P	29	C	30	20A-1P	868	CHLORINE BUILDING EXTERIOR LIGHTING	C
C	GUH-6363 - CHEMICAL ROOM GAS UNIT HEATER 6	672	15A-1P	31	A	32	20A-1P	225	CHLORINE BUILDING ELECTRICAL/MECHANICAL ROOM LIGHTING	C
C	GUH-6364 - MECHANICAL ROOM GAS UNIT HEATER 1	228	15A-1P	33	B	34	20A-1P	1620	CHLORINE BUILDING RECEPTACLES	I
C	HTU-6331 - SAFETY SHOWER HEAT TRACE	150	15A-1P	35	C	36	20A-1P	265	CHLORINE BUILDING ELECTRICAL/MECHANICAL ROOM LIGHTING	C
C	HTU-6332 - HEAT TRACE	1440	15A-1P	37	A	38	20A-1P	1800	CHLORINE BUILDING RECEPTACLES	I
C	LVR-6355 - CHLORINE STORAGE LOUVER 1	600	15A-1P	39	B	40	20A-1P	720	CHLORINE BUILDING ELECTRICAL/MECHANICAL ROOM RECEPTACLES	I
C	LVR-6356 - CHLORINE STORAGE LOUVER 2	600	15A-1P	41	C	42	20A-1P	540	CHLORINE BUILDING ELECTRICAL/MECHANICAL ROOM RECEPTACLES	I
C	PMP-6852 - VAULT SUMP PUMP	1176	15A-1P	43	A	44	20A-1P	1260	CHLORINE BUILDING RECEPTACLES	I
C	CL SECURITY PNL	1200	15A-1P	45	B	46	20A-1P	185	CHLORINE BUILDING ELECTRICAL/MECHANICAL ROOM ROOF LIGHTING	C
C	RTU-CL - CHLORINE PCM CABINET	1920	20A-1P	47	C	48	20A-1P		SPARE	
I	UPS-CL BYPASS - UNINTERRUPTIBLE POWER SUPPLY	2620	60A-2P	49	A	50	20A-1P		SPARE	
I		2620		51	B	52	20A-1P		SPARE	
	SPARE		20A-1P	53	C	54	20A-1P	150	ONLINE CHLORINE CYLINDER DRIP LEG HEATER RECEPTACLES	C
	SPARE		20A-1P	55	A	56	20A-1P	100	ONLINE CHLORINE CYLINDER DRIP LEG HEATER RECEPTACLES	C
	SPARE		20A-1P	57	B	58	20A-1P	150	ONLINE CHLORINE CYLINDER DRIP LEG HEATER RECEPTACLES	C
	SPARE		20A-1P	59	C	60	20A-1P	100	ONLINE CHLORINE CYLINDER DRIP LEG HEATER RECEPTACLES	C

PANEL PNL-UPS-CL

2/3/2025

LOCATION:	CHLORINE BUILDING	NEMA:	1	PH A WEIGHTED VA	3060
VOLTS:	208/120	FEED:	BOTTOM	PH B WEIGHTED VA	3160
PHASE & WIRE:	1 PH 3W	MTG.	SURFACE		
INTERRUPT:	18 KAIC	BUS RATING:	100		
OPTIONS:	SPD	MAIN:	CB	EQUIP SIZING VA	6320
		MAIN RATING:	100 AF 60 AT	PANEL AMPS	30.4

I/C/S	DESCRIPTION	LOAD (VA)	BKR	CIR	Ø	CIR	BKR	LOAD (VA)	DESCRIPTION	I/C/S
C	RTU-CL - CHLORINE PCM CABINET	1920	20A-1P	1	A	2	20A-1P		SPARE	
I	VCP-6301 - CHLORINE VALVE CONTROL PANEL 1	132	15A-1P	3	B	4	20A-1P	800	LCP-6361 - MASTER GO/NO-GO CHLORINE PANEL (CLIP)	C
I	VCP-6303 - CHLORINE VALVE CONTROL PANEL 2	132	15A-1P	5	A	6	20A-1P		SPARE	
I	VCP-6305 - CHLORINE VALVE CONTROL PANEL 3	132	15A-1P	7	B	8	20A-1P		SPARE	
I	VCP-6307 - CHLORINE VALVE CONTROL PANEL 4	132	15A-1P	9	A	10	20A-1P		SPARE	
I	VCP-6309 - CHLORINE VALVE CONTROL PANEL 5	132	15A-1P	11	B	12	20A-1P		SPARE	
I	VCP-6311 - CHLORINE VALVE CONTROL PANEL 6	132	15A-1P	13	A	14	20A-1P		SPARE	
I	VCP-6314 - CHLORINE VALVE CONTROL PANEL 7	132	15A-1P	15	B	16	20A-1P		SPARE	
I	VCP-6316 - CHLORINE VALVE CONTROL PANEL 8	132	15A-1P	17	A	18	20A-1P		SPARE	
I	VCP-6318 - CHLORINE VALVE CONTROL PANEL 9	132	15A-1P	19	B	20	20A-1P		SPARE	
I	VCP-6320 - CHLORINE VALVE CONTROL PANEL 10	132	15A-1P	21	A	22	20A-1P		SPARE	
C	CL SECURITY PNL	1200	15A-1P	23	B	24	20A-1P		SPARE	
	SPARE		15A-1P	25	A	26	20A-1P		SPARE	
	SPARE		20A-1P	27	B	28	20A-1P		SPARE	
	SPARE		20A-1P	29	A	30	20A-1P		SPARE	
	SPARE		20A-1P	31	B	32	20A-1P		SPARE	
	SPARE		20A-1P	33	A	34	20A-1P		SPARE	
	SPARE		20A-1P	35	B	36	20A-1P		SPARE	
	SPARE		20A-1P	37	A	38	20A-1P		SPARE	
	SPARE		20A-1P	39	B	40	20A-1P		SPARE	
	SPARE		20A-1P	41	A	42	20A-1P		SPARE	

REV	DATE	BY	DESCRIPTION
			BID SET

DESIGNED SKB
DRAWN MNH
CHECKED GCE
DATE FEBRUARY 2025

REGISTERED PROFESSIONAL ENGINEER No. 5329023 GUY C. EHLERS STATE OF UTAH

carollo

JORDAN VALLEY WATER CONSERVANCY DISTRICT

JORDAN VALLEY WATER TREATMENT PLANT
FILTER AND CHEMICAL FEED UPGRADES
ELECTRICAL
PANELBOARD SCHEDULE 4

VERIFY SCALES
BAR IS ONE INCH ON ORIGINAL DRAWING
0 1"
IF NOT ONE INCH ON THIS SHEET, ADJUST SCALES ACCORDINGLY

JOB NO. 202001.10
DRAWING NO. 04E04
SHEET NO. 324 OF 531

PANEL PP-CS

2/3/2025

LOCATION:	CAUSTIC SODA BUILDING	NEMA: 1	PH A WEIGHTED VA 8648
VOLTS:	480	FEED: BOTTOM	PH B WEIGHTED VA 8648
PHASE & WIRE:	3 PH 3W	MTG. SURFACE	PH C WEIGHTED VA 8648
INTERRUPT:	65 KAIC	BUS RATING: 100	
OPTIONS:	SPD	MAIN: CB	EQUIP SIZING VA 25943
		MAIN RATING: 100 AF 100 AT	PANEL AMPS 31.2

I/C/S	DESCRIPTION	LOAD (VA)	BKR	CIR	Ø	CIR	BKR	LOAD (VA)	DESCRIPTION	I/C/S
C		6430		1	A	2			SPARE	
C	MAU-6560 - MAKEUP AIR UNIT	6430	30A-3P	3	B	4	20A-3P		SPARE	
C		6430		5	C	6			SPARE	
I		305		7	A	8			SPARE	
I	FV-4112 - BW TANK 1 EFFLUENT VALVE	305	15A-3P	9	B	10	20A-3P		SPARE	
I		305		11	C	12			SPARE	
I		305		13	A	14			SPARE	
I	FV-4122 - BW TANK 2 EFFLUENT VALVE	305	15A-3P	15	B	16	20A-3P		SPARE	
I		305		17	C	18			SPARE	
	SPARE			19	A	20			SPARE	
	SPARE		20A-3P	21	B	22	20A-3P		SPARE	
	SPARE			23	C	24			SPARE	
	SPARE			25	A	26			SPARE	
	SPARE		20A-3P	27	B	28	20A-3P		SPARE	
	SPARE			29	C	30			SPARE	
	SPARE			31	A	32			SPARE	
	SPARE		20A-3P	33	B	34	20A-3P		SPARE	
	SPARE			35	C	36			SPARE	
	SPARE		20A-1P	37	A	38			SPARE	
1 C	CULINARY RESERVOIR LIGHT FOR SECURITY (PERMANENT POWER)		20A-2P	39	B	40	20A-3P		SPARE	
C				41	C	42			SPARE	

PANEL PNL-CS

2/4/2025

LOCATION:	CAUSTIC SODA BUILDING	NEMA: 1	PH A WEIGHTED VA 20388
VOLTS:	208/120	FEED: BOTTOM	PH B WEIGHTED VA 20519
PHASE & WIRE:	3 PH 4W	MTG. SURFACE	PH C WEIGHTED VA 15945
INTERRUPT:	18 KAIC	BUS RATING: 250	
OPTIONS:	SPD	MAIN: CB	EQUIP SIZING VA 61556
		MAIN RATING: 250 AF 250 AT	PANEL AMPS 170.9

I/C/S	DESCRIPTION	LOAD (VA)	BKR	CIR	Ø	CIR	BKR	LOAD (VA)	DESCRIPTION	I/C/S
I	HP-6551 - ELECTRICAL ROOM HP 1	1976	25A-2P	1	A	2	20A-1P	900	CAUSTIC SODA ELECTRICAL ROOM RECEPTACLES	I
I		1976		3	B	4	20A-1P	900	CAUSTIC SODA BUILDING RECEPTACLES	I
I	HP-6552 - ELECTRICAL ROOM HP 2	1976	25A-2P	5	C	6	20A-1P	1260	CAUSTIC SODA BUILDING RECEPTACLES	I
I		1976		7	A	8	20A-1P	1800	CAUSTIC SODA BUILDING RECEPTACLES	I
C	HTU-6510 - SAFETY SHOWER HEAT TRACE	180	15A-1P	9	B	10	20A-1P	720	CAUSTIC SODA BUILDING RECEPTACLES	I
	SPARE		20A-1P	11	C	12	30A-1P	2880	HTU-6501 - CAUSTIC SODA TANK 1 HEAT TRACE	C
	SPARE		20A-1P	13	A	14	30A-1P	2880	HTU-6502 - CAUSTIC SODA TANK 2 HEAT TRACE	C
C	RTU-CS - CAUSTIC SODA PCM CABINET	1920	20A-1P	15	B	16	30A-1P	2880	HTU-6503 - CAUSTIC SODA TANK 3 HEAT TRACE	C
C	HEA-6501 - CAUSTIC SODA TANK 1 HEAT TRACE	2880	30A-1P	17	C	18	15A-1P	600	HTU-6511 - SAFETY SHOWER (LOADING) HEAT TRACE	C
	SPARE		20A-1P	19	A	20	30A-1P	2880	HTU-6531 - CAUSTIC SODA DAY TANK HEAT TRACE	C
C	GUH-6561 - CAUSTIC STORAGE ROOM UNIT HEATER 1	288	15A-1P	21	B	22	20A-1P	500	VCP-6541 - CAUSTIC SODA SMALL FEED PUMP 1 CONTROL PANEL	I
C	GUH-6562 - CAUSTIC STORAGE ROOM UNIT HEATER 2	288	15A-1P	23	C	24	20A-1P	500	VCP-6562 - CAUSTIC SODA SMALL FEED PUMP 2 CONTROL PANEL	I
C	GUH-6563 - CAUSTIC STORAGE ROOM UNIT HEATER 3	444	15A-1P	25	A	26	20A-1P		SPARE	
C	GUH-6564 - CAUSTIC STORAGE ROOM UNIT HEATER 4	444	15A-1P	27	B	28	15A-1P	1200	CS SECURITY PNL	C
C	TWH-6565 - TEPID WATER HEATER 1	480	15A-1P	29	C	30	20A-1P	66	CAUSTIC SODA BUILDING EXTERIOR LIGHTING	C
C	TWH-6566 - TEPID WATER HEATER 2	480	15A-1P	31	A	32	20A-1P		SPARE	
C	TWH-6567 - TEPID WATER HEATER 3	480	15A-1P	33	B	34	15A-1P	71	EF-4151 - BACKWASH VAULT EXHAUST FAN	C
I	CAUSTIC SODA BUILDING PUMP RECEPTACLE	180	20A-1P	35	C	36	20A-1P		SPARE	
I	CAUSTIC SODA BUILDING PUMP RECEPTACLE	180	20A-1P	37	A	38	20A-1P	1186	CAUSTIC SODA BUILDING LIGHTING	C
C	PMP-4125 - VALVE VAULT SUMP PUMP	1176	15A-1P	39	B	40	20A-1P	1183	CAUSTIC SODA BUILDING LIGHTING	C
C	ELECTRICAL ROOM ROOF LIGHTS	111	20A-1P	41	C	42	20A-1P	222	CAUSTIC SODA BUILDING ELECTRICAL ROOM LIGHTING	C
	SPARE		20A-1P	43	A	44	20A-1P		SPARE	
	SPARE		20A-1P	45	B	46	20A-1P		SPARE	
	SPARE		20A-1P	47	C	48	20A-1P		SPARE	
	SPARE		20A-1P	49	A	50	20A-1P		SPARE	
	SPARE		20A-1P	51	B	52	20A-1P		SPARE	
	SPARE		20A-1P	53	C	54	20A-1P		SPARE	
	SPARE		20A-1P	55	A	56		3719		F
I	UPS-CS BYPASS - UNINTERRUPTIBLE POWER SUPPLY	2620	60A-2P	57	B	58	50A-3P	1525	PNL-CELL	F
I		2620		59	C	60		0		F

PANEL PNL-UPS-CS

2/4/2025

LOCATION:	CAUSTIC SODA BUILDING	NEMA: 1	PH A WEIGHTED VA 1500
VOLTS:	208/120	FEED: BOTTOM	PH B WEIGHTED VA 2400
PHASE & WIRE:	1 PH 3W	MTG. SURFACE	
INTERRUPT:	18 KAIC	BUS RATING: 100	
OPTIONS:	SPD	MAIN: CB	EQUIP SIZING VA 4800
		MAIN RATING: 100 AF 60 AT	PANEL AMPS 23.1

I/C/S	DESCRIPTION	LOAD (VA)	BKR	CIR	Ø	CIR	BKR	LOAD (VA)	DESCRIPTION	I/C/S
C	CS SECURITY PNL	1200	15A-1P	1	A	2	20A-1P		SPARE	
C	RTU-CS - CAUSTIC SODA PCM CABINET	1920	20A-1P	3	B	4	20A-1P		SPARE	
	SPARE		20A-1P	5	A	6	20A-1P		SPARE	
	SPARE		20A-1P	7	B	8	20A-1P		SPARE	
	SPARE		20A-1P	9	A	10	20A-1P		SPARE	
	SPARE		20A-1P	11	B	12	20A-1P		SPARE	
	SPARE		20A-1P	13	A	14	20A-1P		SPARE	
	SPARE		20A-1P	15	B	16	20A-1P		SPARE	
	SPARE		20A-1P	17	A	18	20A-1P		SPARE	
	SPARE		20A-1P	19	B	20	20A-1P		SPARE	
	SPARE		20A-1P	21	A	22	20A-1P		SPARE	
	SPARE		20A-1P	23	B	24	20A-1P		SPARE	
	SPARE		20A-1P	25	A	26	20A-1P		SPARE	
	SPARE		20A-1P	27	B	28	20A-1P		SPARE	
	SPARE		20A-1P	29	A	30	20A-1P		SPARE	

KEY NOTES:

1. AFTER THE CAUSTIC SODA BUILDING IS ENERGIZED AND OPERATIONAL, USE THIS CIRCUIT BREAKER TO POWER THE CULINARY RESERVOIR CIRCUIT. DURING CONSTRUCTION, TEMPORARILY POWER THE CULINARY RESERVOIR CIRCUIT FROM PNL-CELL.

REV	DATE	BY	DESCRIPTION
			BID SET

DESIGNED SKB
DRAWN MNH
CHECKED GCE
DATE FEBRUARY 2025

REGISTERED PROFESSIONAL ENGINEER No. 5329023 GUY C. EHLERS STATE OF UTAH

carollo

JORDAN VALLEY WATER CONSERVANCY DISTRICT

JORDAN VALLEY WATER TREATMENT PLANT
FILTER AND CHEMICAL FEED UPGRADES
ELECTRICAL
PANELBOARD SCHEDULE 5

VERIFY SCALES
BAR IS ONE INCH ON ORIGINAL DRAWING
0 1"
IF NOT ONE INCH ON THIS SHEET, ADJUST SCALES ACCORDINGLY

JOB NO. 202001.10
DRAWING NO. 04E05
SHEET NO. 325 OF 531

Plot Date: 9/12/2022 7:29:07 AM
LAST SAVED BY: mhood

KEY NOTES:

1. PANELBOARD TO BE PROVIDED BY THE PAC SYSTEM SUPPLIER.

PANEL PP-PEA

2/10/2025

LOCATION: PEA	NEMA: 1	PH A WEIGHTED VA	6764
VOLTS: 480	FEED: BOTTOM	PH B WEIGHTED VA	6764
PHASE & WIRE 3 PH 3W	MTG. SURFACE	PH C WEIGHTED VA	6764
INTERRUPT: 65 KAIC	BUS RATING: 100		
OPTIONS: SPD	MAIN: CB	EQUIP SIZING VA	20291
	MAIN RATING: 100 AF 100 AT	PANEL AMPS	24.4

I/C/S	DESCRIPTION	LOAD (VA)	BKR	CIR	Ø	CIR	BKR	LOAD (VA)	DESCRIPTION	I/C/S
C		1331		1	A	2				
C	HOI-6906 - DRY POLYMER HOIST 1	1331	15A-3P	3	B	4	20A-3P		SPARE	
C		1331		5	C	6				
S		1331		7	A	8				
S	HOI-6916 - DRY POLYMER HOIST 2	1331	15A-3P	9	B	10	20A-3P		SPARE	
S		1331		11	C	12				
I		5100		13	A	14				
I	VCP-6901 - PEA FEED SYSTEM VENDOR CONTROL PANEL 1	5100	20A-3P	15	B	16	20A-3P		SPARE	
I		5100		17	C	18				
				19	A	20				
	SPARE		20A-3P	21	B	22	20A-3P		SPARE	
				23	C	24				
				25	A	26				
	SPARE		20A-3P	27	B	28	20A-3P		SPARE	
				29	C	30				
				31	A	32				
	SPARE		20A-3P	33	B	34	20A-3P		SPARE	
				35	C	36				
				37	A	38				
	SPARE		20A-3P	39	B	40	20A-3P		SPARE	
				41	C	42				

PANEL PNL-PEA

2/10/2025

LOCATION: PEA	NEMA: 1	PH A WEIGHTED VA	1160
VOLTS: 208/120	FEED: BOTTOM	PH B WEIGHTED VA	1500
PHASE & WIRE 3 PH 4W	MTG. SURFACE	PH C WEIGHTED VA	4310
INTERRUPT: 65 KAIC	BUS RATING: 100		
OPTIONS: SPD	MAIN: CB	EQUIP SIZING VA	12930
	MAIN RATING: 100 AF 100 AT	PANEL AMPS	35.9

I/C/S	DESCRIPTION	LOAD (VA)	BKR	CIR	Ø	CIR	BKR	LOAD (VA)	DESCRIPTION	I/C/S
	SPARE		XXA-1P	1	A	2	20A-1P		SPARE	
	SPARE		XXA-1P	3	B	4	20A-1P		SPARE	
C	SUH-6961 - STEAM/HOT WATER UNIT HEATER 1	528	15A-1P	5	C	6	20A-1P	1920	RTU-PEA - PEA PCM CABINET	C
C	SUH-6962 - STEAM/HOT WATER UNIT HEATER 2	528	15A-1P	7	A	8	20A-1P		SPARE	
I	VCP-6204 - PRIMARY COAGULANT FEED PUMP 1	500	15A-1P	9	B	10	20A-1P		SPARE	
I	VCP-6211 - PRIMARY COAGULANT FEED PUMP 3	500	15A-1P	11	C	12	20A-1P		SPARE	
I	VCP-6221 - PRIMARY COAGULANT FEED PUMP 4	500	15A-1P	13	A	14	20A-1P		SPARE	
I	VCP-6911 - PEA FILTER AID SMALL FEED PUMP 1 CONTROL PANEL	500	15A-1P	15	B	16	20A-1P		SPARE	
I	VCP-6916 - PEA FILTER AID SMALL FEED PUMP 2 CONTROL PANEL	250	15A-1P	17	C	18	20A-1P		SPARE	
	SPARE		15A-1P	19	A	20	20A-1P		SPARE	
I	VCP-6956 - PEA FILTER AID DOSING PUMP VENDOR CONTROL PANEL	500	15A-1P	21	B	22	20A-1P		SPARE	
I	VCP-7106 - PEC FEED PUMP 1 VENDOR CONTROL PANEL	500	15A-1P	23	C	24	20A-1P		SPARE	
I	VCP-7107 - PEC FEED PUMP 2 VENDOR CONTROL PANEL	0	15A-1P	25	A	26	20A-1P		SPARE	
	SPARE		20A-1P	27	B	28	20A-1P		SPARE	
	SPARE		20A-1P	29	C	30	20A-1P		SPARE	
	SPARE		20A-1P	31	A	32	20A-1P		SPARE	
	SPARE		20A-1P	33	B	34	20A-1P		SPARE	
	SPARE		20A-1P	35	C	36	20A-1P		SPARE	
	SPARE		20A-1P	37	A	38	20A-1P		SPARE	
	SPARE		20A-1P	39	B	40	20A-1P		SPARE	
	SPARE		20A-1P	41	C	42	20A-1P		SPARE	

PANEL PP-PAC

2/10/2025 (1)

LOCATION: PAC BUILDING	NEMA: 1	PH A WEIGHTED VA	30190
VOLTS: 480	FEED: BOTTOM	PH B WEIGHTED VA	30190
PHASE & WIRE 3 PH 3W	MTG. SURFACE	PH C WEIGHTED VA	30190
INTERRUPT: 65 KAIC	BUS RATING: 225		
OPTIONS: SPD	MAIN: CB	EQUIP SIZING VA	90569
	MAIN RATING: 225 AF 200 AT	PANEL AMPS	108.9

I/C/S	DESCRIPTION	LOAD (VA)	BKR	CIR	Ø	CIR	BKR	LOAD (VA)	DESCRIPTION	I/C/S
I		2523		1	A	2		1667		C
I	VCP2-6802 - VENDOR MOTOR STARTER PANEL	2523	15A-3P	3	B	4	15A-3P	1667	EUH-6861 - PAC AUX BUILDING HEATER 1	C
I		2523		5	C	6		1667		C
I		2523		7	A	8		1667		C
I	VCP2-6832 - VENDOR MOTOR STARTER PANEL	2523	20A-3P	9	B	10	15A-3P	1667	EUH-6862 - PAC AUX BUILDING HEATER 2	C
I		2523		11	C	12		1667		C
I		5987		13	A	14		3334		C
I	VCP-6820 - AIR COMPRESSOR VENDOR CONTROL PANEL	5987	50A-3P	15	B	16	20A-3P	3334	EUH-6863 - PAC SILO 1 HEATER	C
I		5987		17	C	18		3334		C
I		5987		19	A	20		3334		C
I	VCP-6850 - AIR COMPRESSOR VENDOR CONTROL PANEL	5987	50A-3P	21	B	22	20A-3P	3334	EUH-6864 - PAC SILO 2 HEATER	C
I		5987		23	C	24		3334		C
				25	A	26		667		I
	SPARE		15A-3P	27	B	28	45A-3P	667	PPSC-PAC - PACKAGED POWER SUPPLY CENTER	I
				29	C	30		667		I
				31	A	32				
	SPARE		50A-3P	33	B	34	20A-3P		SPARE	
				35	C	36				
				37	A	38				
	SPARE		20A-3P	39	B	40	20A-3P		SPARE	
				41	C	42				

REV	DATE	BY	DESCRIPTION
			BID SET

DESIGNED SKB
DRAWN MNH
CHECKED GCE
DATE FEBRUARY 2025

REGISTERED PROFESSIONAL ENGINEER No. 5329023 GUY C. EHLERS STATE OF UTAH

carollo

JORDAN VALLEY WATER CONSERVANCY DISTRICT

JORDAN VALLEY WATER TREATMENT PLANT
FILTER AND CHEMICAL FEED UPGRADES
ELECTRICAL
PANELBOARD SCHEDULE 6

VERIFY SCALES
BAR IS ONE INCH ON ORIGINAL DRAWING
0 1"
IF NOT ONE INCH ON THIS SHEET, ADJUST SCALES ACCORDINGLY

JOB NO. 202001.10
DRAWING NO. 04E06
SHEET NO. 326 OF 531

PANEL UPS-S

1/24/2025 (1)

LOCATION: SOUTHEAST ELECTRICAL ROOM
VOLTS: 208/120
PHASE & WIRE 3 PH 4W
INTERRUPT: 10 KAIC

NEMA: 1
FEED: BOTTOM
MTG. SURFACE
BUS RATING: 100
MAIN: CB
MAIN RATING: 100 AF 100 AT

PH A WEIGHTED VA 0
PH B WEIGHTED VA 2400
PH C WEIGHTED VA 2400
EQUIP SIZING VA 7200
PANEL AMPS 20.0

I/C/S	DESCRIPTION	LOAD (VA)	BKR	CIR	Ø	CIR	BKR	LOAD (VA)	DESCRIPTION	I/C/S
	PLC ALUM		20A-1P	1	A	2	20A-1P		PLC BOILER	
	PARTICLE COUNTER AT BOILER		20A-1P	3	B	4	20A-1P		PLC ELECTRICAL 2N	
	PLC SLUDGE		20A-1P	5	C	6	20A-1P		PLC PILOT	
	PLC ELECTRICAL 2S		20A-1P	7	A	8	20A-1P		PLC NORTH	
	FIT 6811, 6812		20A-1P	9	B	10	20A-1P		PLC CHLORINE	
	FIT 6813, 6814		20A-1P	11	C	12	20A-1P		SPARE	
F		0		13	A	14	20A-1P		PLC SEDBS	
F	UPS-B	0	150A-3P	15	B	16	20A-1P		PLC SEDBS	
F		0		17	C	18	20A-1P		PLC SOUTH	
	PLC RECYCLE		20A-1P	19	A	20	20A-1P		CAMERA SW	
	SPARE		20A-1P	21	B	22	20A-1P		CLO2 STRUCTURE	
	SPARE		20A-1P	23	C	24	20A-1P		CLO2 STRUCTURE	
	UPS-CR		20A-1P	25	A	26	20A-1P		PLC FLUORIDE	
	UPS-CR		20A-1P	27	B	28	20A-1P	1920	RTU-BL - BLOWER PCM CABINET	C (4)
	UPS-CR		20A-1P	29	C	30	20A-1P		SPARE	
	SPARE		20A-1P	31	A	32	20A-1P		SPARE	
	EXISTING BREAKER PANEL		20A-1P	33	B	34	20A-1P		EXISTING BREAKER PANEL	
	UPS PANEL IVS		20A-1P	35	C	36	20A-1P		UPS PANEL SCREEN	
	UPS PANEL IVS		20A-1P	37	A	38	20A-1P		UPS PANEL SCREEN	
	UPS PANEL IVS		20A-1P	39	B	40	20A-1P		UPS PANEL SCREEN	
	SPARE		20A-1P	41	C	42	20A-1P	1920	RTU-PEA - PEA PCM CABINET	C (4)

PANEL UPS-B

1/24/2025 (3)

LOCATION: Filters
VOLTS: 208/120
PHASE & WIRE 3 PH 4W
INTERRUPT: 10 KAIC

NEMA: 1
FEED: BOTTOM
MTG. SURFACE
BUS RATING: 150
MAIN: CB
MAIN RATING: 150 AF 150 AT

PH A WEIGHTED VA 0
PH B WEIGHTED VA 0
PH C WEIGHTED VA 0
EQUIP SIZING VA 0
PANEL AMPS 0.0

I/C/S	DESCRIPTION	LOAD (VA)	BKR	CIR	Ø	CIR	BKR	LOAD (VA)	DESCRIPTION	I/C/S
	FILTER CONSOLE #1		20A-1P	1	A	2	20A-1P		FILTER CONSOLE #2	
	FILTER CONSOLE #3		20A-1P	3	B	4	20A-1P		FILTER CONSOLE #4	
	FILTER CONSOLE #5		20A-1P	5	C	6	20A-1P		FILTER CONSOLE #6	
	FILTER CONSOLE #7		20A-1P	7	A	8	20A-1P		FILTER CONSOLE #8	
	FILTER CONSOLE #9		20A-1P	9	B	10	20A-1P		FILTER CONSOLE #10	
	FILTER CONSOLE #11		20A-1P	11	C	12	20A-1P		FILTER CONSOLE #12	
	FILTER CONSOLE #13		20A-1P	13	A	14	20A-1P		FILTER CONSOLE #14	
	FILTER CONSOLE #15		20A-1P	15	B	16	20A-1P		FILTER CONSOLE #16	
	D-MARK/JOHNSON CONTROL PANEL		20A-1P	17	C	18	20A-1P		MECHANICAL ROOM #1 OUTLETS	
	PLC RECYCLE		20A-1P	19	A	20	20A-1P		SPARE	
	RTU-B		20A-1P	21	B	22	20A-1P		CHLORINATORS	
	CHLORINE SCALES		20A-1P	23	C	24	20A-1P		CHLORINE GAS DETECTION	
	CL2 AUDIBLE ALARM		20A-1P	25	A	26	20A-1P		ELEVATOR TELEPHONE	
	SPARE SERVER POWER		20A-1P	27	B	28	20A-1P		PENTHOUSE MW RADIO	
	SERVER POWER OUTLETS		20A-1P	29	C	30	20A-1P		SPARE	
	RTU-ELECTRICAL ROOM #1		20A-1P	31	A	32	20A-1P		SPARE	
	SERVER ROOM		20A-1P	33	B	34	20A-1P		ELECTRICAL ROOM OUTLETS	
	SERVER ROOM		20A-1P	35	C	36	20A-1P		ELECTRICAL ROOM OUTLETS	
	MICROWAVE RADIO RACK LEVEL 6		20A-1P	37	A	38	20A-1P		SPARE	
	SPARE		20A-1P	39	B	40	20A-1P		SPARE	
	SPARE		20A-1P	41	C	42	20A-1P		SPARE	

PANEL PNL-CPS

1/24/2025 (1)

LOCATION: Culinary Pump Station
VOLTS: 208/120
PHASE & WIRE 3 PH 4W
INTERRUPT: 10 KAIC

NEMA: 1
FEED: BOTTOM
MTG. SURFACE
BUS RATING: 100
MAIN: CB
MAIN RATING: 100 AF 70 AT

PH A WEIGHTED VA 10919
PH B WEIGHTED VA 12997
PH C WEIGHTED VA 7379
EQUIP SIZING VA 38990
PANEL AMPS 108.2

I/C/S	DESCRIPTION	LOAD (VA)	BKR	CIR	Ø	CIR	BKR	LOAD (VA)	DESCRIPTION	I/C/S
C	INSIDE LIGHTS	500	20A-1P	1	A	2	20A-1P	540	CPS RECEPTACLES	I
C	OUTSIDE LIGHTS	500	20A-1P	3	B	4	40A-1P	2686	CCTV CAMERA	C
C	WELL LIGHTS	120	20A-1P	5	C	6	20A-1P	300	AQUEDUCT METER VAULT SUMP PUMP	I
C	BLUFFDALE METER VAULT RTU	3840	40A-1P	7	A	8	20A-1P	120	AQUEDUCT METER VAULT LIGHTS	C
C	AQUEDUCT METER VAULT FAN	696	20A-1P	9	B	10	20A-1P	540	AQUEDUCT METER VAULT RECEPTACLES	I
C	SECURITY PANEL	500	20A-1P	11	C	12		4804		I
	SPARE		20A-1P	13	A	14	50A-3P	4804	GEN-5501 - JACKET WATER HEATER	I (2)
	SPARE		20A-1P	15	B	16		4804		I
	SPARE		20A-1P	17	C	18	20A-1P		SPARE	
	SPARE		20A-1P	19	A	20	20A-1P		SPARE	
	SPARE		20A-1P	21	B	22	20A-1P		SPARE	
	SPARE		20A-1P	23	C	24	20A-1P		SPARE	
	SPARE		20A-1P	25	A	26	20A-1P		SPARE	
I	UPS-CPS	2800	70A-2P	27	B	28	20A-1P		SPARE	
I		1500		29	C	30	20A-1P		SPARE	
	SPARE		20A-1P	31	A	32	20A-1P		SPARE	
	SPARE		20A-1P	33	B	34	20A-1P		SPARE	
	SPARE		20A-1P	35	C	36	20A-1P		SPARE	
	SPARE		20A-1P	37	A	38	20A-1P		SPARE	
	SPARE		20A-1P	39	B	40	20A-1P		SPARE	
	SPARE		20A-1P	41	C	42	20A-1P		SPARE	

(#) KEY NOTES:

1. EXISTING PANELBOARD.
2. PROVIDE NEW CIRCUIT BREAKER FOR NEW LOAD.
3. PANELBOARD INCLUDED FOR REFERENCE ONLY SHOWING POWER SOURCE FOR FILTER CONSOLES.
4. USE EXISTING CIRCUIT BREAKER FOR NEW LOAD.

REV	DATE	BY	DESCRIPTION
			BID SET

DESIGNED SKB
DRAWN MNH
CHECKED GCE
DATE FEBRUARY 2025

REGISTERED PROFESSIONAL ENGINEER No. 5329023 GUY C. EHLERS STATE OF UTAH

carollo

JORDAN VALLEY WATER CONSERVANCY DISTRICT

JORDAN VALLEY WATER TREATMENT PLANT
FILTER AND CHEMICAL FEED UPGRADES
ELECTRICAL
PANELBOARD SCHEDULE 7

VERIFY SCALES
BAR IS ONE INCH ON ORIGINAL DRAWING
0 1"
IF NOT ONE INCH ON THIS SHEET, ADJUST SCALES ACCORDINGLY

JOB NO. 202001.10
DRAWING NO. 04E07
SHEET NO. 327 OF 531

PANEL PNL-CELL

1/31/2025

LOCATION: SOUTH GATE/CELL TOWER AREA
VOLTS: 208/120
PHASE & WIRE: 3 PH 4W
INTERRUPT: 18 KAIC
OPTIONS: SPD

NEMA: 4X
FEED: BOTTOM
MTG. SURFACE
BUS RATING: 100
MAIN: CB
MAIN RATING: 100 AF 50 AT

PH A WEIGHTED VA: 3719
PH B WEIGHTED VA: 1525
PH C WEIGHTED VA: 0
EQUIP SIZING VA: 11156
PANEL AMPS: 31.0

I/C/S	DESCRIPTION	LOAD (VA)	BKR	CIR	Ø	CIR	BKR	LOAD (VA)	DESCRIPTION	I/C/S
C	SOUTH SECURITY GATE	1800	20A-1P	1	A	2	15A-1P	600	ELECTRONIC EQUIPMENT ENCLOSURE	C
C	CCTV CAMERA	360	20A-1P	3	B	4	20A-1P		SPARE	
	SPARE		20A-1P	5	C	6	20A-1P		SPARE	
C	POLE LIGHT	75	20A-1P	7	A	8	20A-2P	500	CULINARY RESERVOIR LIGHT FOR SECURITY (TEMP POWER)	C
C	BACKWASH RESERVOIR LEVEL TRANSMITTER HEATER	360	15A-1P	9	B	10		500	VIA STEP-UP TRANSFORMER	C
	SPARE		20A-1P	11	C	12	20A-1P		SPARE	
	SPARE		20A-1P	13	A	14	20A-1P		SPARE	
	SPARE		20A-1P	15	B	16	20A-1P		SPARE	
	SPARE		20A-1P	17	C	18	20A-1P		SPARE	

PANEL PNL-B1

1/24/2025 (1)

LOCATION: FILTER BUILDING LEVEL 2 ELECTRICAL ROOM
VOLTS: 240/120
PHASE & WIRE 1 PH 3W
INTERRUPT: 10 KAIC

NEMA: 1
FEED: TOP
MTG. SURFACE
BUS RATING: 100
MAIN:
MAIN RATING:

PH A WEIGHTED VA: 0
PH B WEIGHTED VA: 0
EQUIP SIZING VA: 0
PANEL AMPS: 0.0

I/C/S	DESCRIPTION	LOAD (VA)	BKR	CIR	Ø	CIR	BKR	LOAD (VA)	DESCRIPTION	I/C/S
	MICRO WAVE RADIO		20A-1P	1	A	2	20A-1P		CHLORINE HEATERS	
	MICRO WAVE RADIO		20A-1P	3	B	4	20A-1P		SPARE	
	FVV-3003		20A-1P	5	A	6	20A-1P		NEW CONTROL PANEL	
	FVV-3023		20A-1P	7	B	8	20A-1P		SPARE	
	FVV-3043		20A-1P	9	A	10	20A-1P		SPARE	
	FVV-3063		20A-1P	11	B	12	20A-1P		LABORATORY	
	FVV-3083		20A-1P	13	A	14	20A-1P		SPARE	
	FVV-3103		20A-1P	15	B	16	20A-1P		SPARE	
	SPCP-SSH		20A-1P	17	A	18	20A-1P		NORTH EAST HEATERS	
	LTS.2016, 2017		20A-1P	19	B	20	20A-1P		NORTH WEST HEATERS	
	LTS.2018, 2019, 2023		20A-1P	21	A	22	20A-1P		SOUTH EAST HEATERS	
	LEVEL 2 NIGHT LIGHT		20A-1P	23	B	24	20A-1P		SOUTH WEST HEATERS	
	LTS.2006, 2007, 2015		20A-1P	25	A	26	20A-1P		6TH FLOOR RADIO RECEPTACLES	
	NO.2 STAIRWELL LTS.		20A-1P	27	B	28	20A-1P		6TH FLOOR RADIO RECEPTACLES	
	LTS.2022, 2024		20A-1P	29	A	30	20A-1P		GLYCOL PUMP	
	NO. 1 Stairwell LTS.		20A-1P	31	B	32	20A-1P		LEV 2 FIRE DAMPERS	
	ELECTRONICS ROOM OUTLETS		20A-1P	33	A	34	20A-1P		ELV. LOBBY LIGHTS	
	DOOR BELL TRANSFORMER		20A-1P	35	B	36	20A-1P		ELECT, JAN, ELECTRONICS ROOM LIGHTS	
	SPARE		20A-1P	37	A	38	20A-1P		LEV 2 REST ROOM LTS	
	MICRO-WAVE RADIO 120V OUTLET LEVEL 6		20A-1P	39	B	40	20A-1P		LTS 2001, 2002	
	SPARE		20A-1P	41	A	42	20A-1P		SPARE	

PANEL PNL-DP-CSS

1/24/2025 (1)

LOCATION: PRIMARY COAGULANT BUILDING
VOLTS: 480
PHASE & WIRE 3 PH 3W
INTERRUPT: 42 KAIC

NEMA: 1
FEED: TOP
MTG. SURFACE
BUS RATING: 100
MAIN: MLO

PH A WEIGHTED VA: 0
PH B WEIGHTED VA: 0
PH C WEIGHTED VA: 0
EQUIP SIZING VA: 0
PANEL AMPS: 0.0

I/C/S	DESCRIPTION	LOAD (VA)	BKR	CIR	Ø	CIR	BKR	LOAD (VA)	DESCRIPTION	I/C/S
I	XFMR-CSS -	0	35A-2P	1	A	2				
I		0		3	B	4	15A-3P		WEST HEATER	
			15A-1P	5	C	6				
				7	A	8				
	EAST HEATER		15A-3P	9	B	10	20A-2P		LIGHT TOP TANK SECURITY	
				11	C	12				
	SPACE			13	A	14	20A-3P		WATER HEATER ALUM BUILDING	
	SPACE			15	B	16				
	SPACE			17	C	18			SPACE	

PANEL PNL-CSS-L

1/24/2025 (1)

LOCATION: PRIMARY COAGULANT BUILDING
VOLTS: 240/120
PHASE & WIRE 1 PH 3W
INTERRUPT: 10 KAIC

NEMA: 1
FEED: TOP
MTG. SURFACE
BUS RATING: 100
MAIN: CB
MAIN RATING: 100 AF 30 AT

PH A WEIGHTED VA: 0
PH B WEIGHTED VA: 0
EQUIP SIZING VA: 0
PANEL AMPS: 0.0

I/C/S	DESCRIPTION	LOAD (VA)	BKR	CIR	Ø	CIR	BKR	LOAD (VA)	DESCRIPTION	I/C/S
	LIGHTS		20A-1P	1	A	2	20A-1P		RECEPTACLE	
	NORTH FAN		20A-1P	3	B	4	20A-1P		SOUTH FAN	
	ALUM TANK CONTROL PANEL		15A-1P	5	A	6	20A-1P		BACKWASH TANK HEATER	
	SPARE		20A-1P	7	B	8	20A-1P		EXTERIOR BUILDING LIGHTS (SOUTH)	
	LIGHTING LOWER AREA ALUM BUILDING		20A-1P	9	A	10	20A-1P		SW EXTERIOR LIGHT	
	SPACE			11	B	12	20A-1P		PEC TRANSFER PUMP	
	SPACE			13	A	14	20A-1P		PACL TRANSFER PUMP	
	BLANK			15	B	16			BLANK	
	BLANK			17	A	18			BLANK	

KEY NOTES:

1. EXISTING PANELBOARD.
2. PROVIDE NEW CIRCUIT BREAKER FOR NEW LOAD.
3. DEMOLISH EXISTING CIRCUIT(S). PROVIDE NEW PANEL SCHEDULE AND LABEL THE CIRCUIT(S) AS SPARE.
4. DISCONNECT POWER FROM THIS CIRCUIT BREAKER AND TEMPORARILY RE-FEED THE CULINARY RESERVOIR CIRCUIT DURING CONSTRUCTION FROM PNL-CELL THROUGH A STEP-UP TRANSFORMER. REFER TO DRAWING 01E02.
5. DURING CONSTRUCTION, TEMPORARILY RE-FEED THE CULINARY RESERVOIR CIRCUIT SODA BUILDING IS ENERGIZED AND OPERATIONAL, PERMANENTLY POWER THE CULINARY RESERVOIR CIRCUIT FROM PP-CS.
6. PANEL WILL BE TEMPORARILY POWERED BY A 120/240V, SINGLE PHASE SOURCE. USE ONLY PHASES A AND B FOR LOADS WHILE CONNECTED TO THE TEMPORARY POWER SOURCE. THE PERMANENT POWER SOURCE WILL BE 120/208V, 3-PHASE.

REV	DATE	BY	DESCRIPTION

BID SET

DESIGNED SKB
DRAWN MNH
CHECKED GCE
DATE FEBRUARY 2025

REGISTERED PROFESSIONAL ENGINEER No. 5329023 GUY C. EHLERS STATE OF UTAH

carollo

JORDAN VALLEY WATER CONSERVANCY DISTRICT

JORDAN VALLEY WATER TREATMENT PLANT
FILTER AND CHEMICAL FEED UPGRADES
ELECTRICAL
PANELBOARD SCHEDULE 8

VERIFY SCALES
BAR IS ONE INCH ON ORIGINAL DRAWING
0 1"
IF NOT ONE INCH ON THIS SHEET, ADJUST SCALES ACCORDINGLY

JOB NO. 202001.10
DRAWING NO. 04E08
SHEET NO. 328 OF 531

LUMINAIRE SCHEDULE

2/3/2025

ITEM	DESCRIPTION	MOUNTING METHOD	LAMP QUANTITY	LAMP TYPE	LUMINAIRE SPECIFICATIONS			
					MANUFACTURER	CATALOG	VOLTS	VA
A	SEALED, AND GASKETED LED LUMINAIRE, CLEAR POLYCARBONATE LENS 80 CRI, SUITABLE FOR WET LOCATIONS, w/ HIGH EFFICIENCY LEDs FOR AMBIENT TEMPERATURES -29 TO 40 DEG C, L80 AT 75,000 HOURS 0-10V DIMMING	CEILING MOUNT OR SUSPENDED AS NEEDED	N/A	LED 4000K CCT 4,426 LUMENS	HOLOPHANE	EVT4 4000LM PCL WD MVOLT GZ10 40K 80 CRI	120	37
C	POLE LIGHT, TYPE T3M DISTRIBUTION ARM MOUNT FOR 3 INCH MINIMUM OD ROUND POLE WITH PHOTOCELL w/ROUND TAPERED POLE WITH MOUNTING ARM SILVER COLOR ANODIZED ALUMINUM, 20'-0" HIGH, 4" DIA MATCH EXISTING POLES	POLE MOUNT	N/A	LED 3000K CCT 8,439 LUMENS	LITHONIA LIGHTING	DSX0 LED P3 30K 70CRI T3M 480 RPA PIR DDBXD	480	77
D	BUILDING-MOUNTED LUMINAIRE WITH ALUMINUM HOUSING SEALED AGAINST MOISTURE AND ENVIRONMENTAL CONTAMINANTS 70 CRI, TYPE IV LIGHT DISTRIBUTION, HIGH EFFICIENCY LEDs w/ MOTION/AMBIENT LIGHT SENSOR, DARK BRONZE WITH BATTERY PACK	WALL MOUNT	N/A	LED 4000K CCT 2,189 LUMENS	LITHONIA LIGHTING	MRW LED P1 SR4 MVOLT E20WX PIR DDBXD	120	22
E	DUAL LITE EXIT LIGHT, NEMA 4X, EMERGENCY UNIT SUITABLE FOR USE IN WET LOCATIONS DUAL VOLTAGE 120/277VAC GREEN 'EXIT' LED, SINGLE FACE SELF-CONTAINED, SEALED MAINTENANCE FREE BATTERY "AC ON" TEST SWITCH	WALL OR CEILING MOUNT	N/A	NICKEL CADMIUM BATTERY 90 MINUTE EMERGENCY OPERATION	DUAL LITE	SEWLSGWE	120	3
F	SEALED, AND GASKETED LED LUMINAIRE, CLEAR POLYCARBONATE LENS 80 CRI, SUITABLE FOR WET LOCATIONS, w/ HIGH EFFICIENCY LEDs FOR AMBIENT TEMPERATURES -29 TO 40 DEG C, L80 AT 75,000 HOURS 0-10V DIMMING WITH BATTERY PACK	CEILING MOUNT OR SUSPENDED AS NEEDED	N/A	LED 4000K CCT 4,426 LUMENS	HOLOPHANE	EVT4 4000LM PCL WD MVOLT GZ10 40K 80 CRI BSL722C	120	37
I	SEALED, AND GASKETED LED LUMINAIRE, CLEAR GLASS LENS WITH UPLIGHT 80 CRI, SUITABLE FOR WET LOCATIONS, w/ HIGH EFFICIENCY LEDs FOR AMBIENT TEMPERATURES -40 TO 65 DEG C, L80 AT 75,000 HOURS 0-10V DIMMING WITH EMERGENCY BATTERY PACK	CEILING MOUNT OR SUSPENDED AS NEEDED	N/A	LED 4000K CCT 14,729 LUMENS	HOLOPHANE	PXHW 15000LM WDU MVOLT 40K 80CRI UNM E10WMCP DGXD	120	118
J	SEALED, AND GASKETED LED LUMINAIRE, CLEAR GLASS LENS WITH UPLIGHT 80 CRI, SUITABLE FOR WET LOCATIONS, w/ HIGH EFFICIENCY LEDs FOR AMBIENT TEMPERATURES -40 TO 65 DEG C, L80 AT 75,000 HOURS 0-10V DIMMING	CEILING MOUNT OR SUSPENDED AS NEEDED	N/A	LED 4000K CCT 14,729 LUMENS	HOLOPHANE	PXHW 15000LM WDU MVOLT 40K 80CRI UNM DGXD	120	118

REV	DATE	BY	DESCRIPTION
			BID SET

DESIGNED SKB
DRAWN DJB
CHECKED GCE
DATE FEBRUARY 2025

REGISTERED PROFESSIONAL ENGINEER No. 5329023 GUY C. EHLERS STATE OF UTAH

JORDAN VALLEY WATER TREATMENT PLANT
FILTER AND CHEMICAL FEED UPGRADES
ELECTRICAL
LUMINAIRE SCHEDULE

VERIFY SCALES
BAR IS ONE INCH ON ORIGINAL DRAWING
0 1"
IF NOT ONE INCH ON THIS SHEET, ADJUST SCALES ACCORDINGLY

JOB NO. 202001.10
DRAWING NO. 05E01
SHEET NO. 329 OF 531

Plot Date: 1/31/2025 11:44:57 AM
LAST SAVED BY: CMoses
PROJECT NO. 202001-100000 FILE NAME: 20200105E01.dwg

ELECTRICAL HANDHOLE AND MANHOLE SCHEDULE

1/28/2025

TAG NO	MINIMUM INTERIOR DIMENSIONS (INCHES)			CONSTRUCTION	TYPICAL DETAIL	SURFACE LOADING	COMMENTS
	WIDTH	LENGTH	DEPTH				
PB-12	48	48	48	PRECAST	EM056	ROADWAY	
PB-13	48	48	48	PRECAST	EM056	SIDEWALK	
PB-14	48	48	48	PRECAST	EM056	ROADWAY	
PB-15	48	48	48	PRECAST	EM056	SIDEWALK	
PB-16	48	48	48	PRECAST	EM251	SIDEWALK	
PB-17	48	48	48	PRECAST	EM056	ROADWAY	
PB-18	48	48	48	PRECAST	EM056	SIDEWALK	
HH-101	24	48	24	PRECAST POLYMER	EM052	SIDEWALK	

NOTES:

1. SEE SPECIFICATION 02581 FOR PRECAST ELECTRICAL HANDHOLES AND MANHOLES.

DISCONNECT SCHEDULE

1/31/2025

TAG	VOLTAGE	POLES	AMPS	NEMA TYPE	TYPE	HORSEPOWER	FUSE SIZE	BREAKER AF/AT	ACCESSORIES
A	600 VAC	3P	30A	4	NON-FUSED				
B	600 VAC	3P	30A	4X-SS	NON-FUSED				
C	600 VAC	3P	30A	12	NON-FUSED				
J	240 VAC	2P	60A	1	NON-FUSED				5
S	600 VAC	3P	30A	9	NON-FUSED				

ACCESSORIES

1= "B" TYPE ELECTRICAL INTERLOCK FOR POSITION INDICATION
2= INSULATED GROUNDABLE NEUTRAL KIT
3= DRAIN AND BREATHER KIT WHEN OUTDOORS
4= EARLY BREAK AUXILIARY CONTACT
5= PROVIDE SEPARATE NEUTRAL AND GROUND TERMINALS

REV	DATE	BY	DESCRIPTION
			BID SET

DESIGNED SKB
DRAWN DJB
CHECKED GCE
DATE FEBRUARY 2025

REGISTERED PROFESSIONAL ENGINEER No. 5329023 GUY C. EHLERS STATE OF UTAH

carollo

JORDAN VALLEY WATER CONSERVANCY DISTRICT

JORDAN VALLEY WATER TREATMENT PLANT
FILTER AND CHEMICAL FEED UPGRADES
ELECTRICAL
MANHOLE, HANDHOLE & DISCONNECT SCHEDULES

VERIFY SCALES
BAR IS ONE INCH ON ORIGINAL DRAWING
0 1"
IF NOT ONE INCH ON THIS SHEET, ADJUST SCALES ACCORDINGLY

JOB NO. 202001.10
DRAWING NO. 05E02
SHEET NO. 330 OF 531

GENERAL NOTES:

1. SEE DRAWINGS 01E03, 01E04 AND 01E05 FOR LOCATION OF FACILITY ON SITE PLANS.

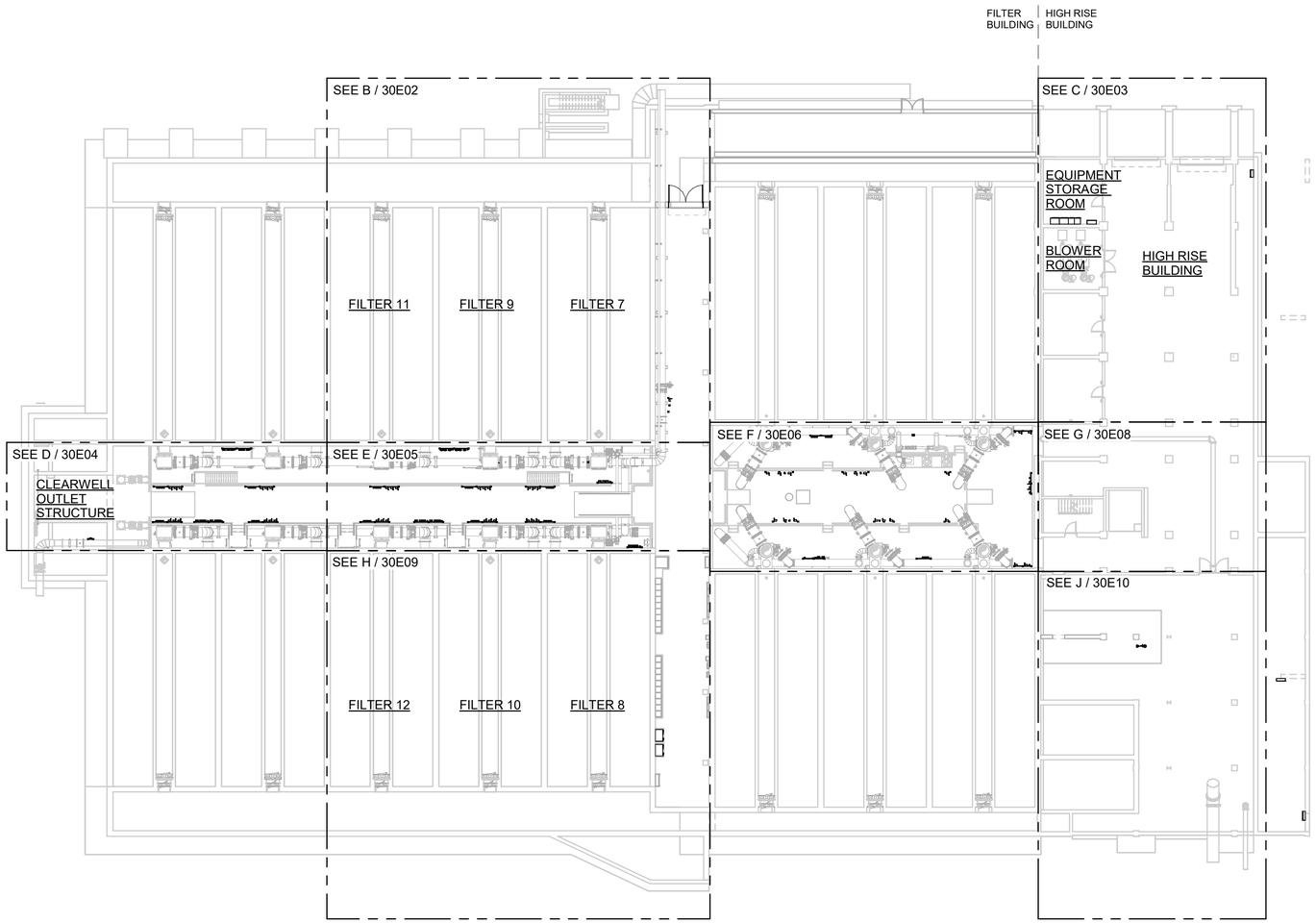

A PLAN
SCALE: 1" = 20'-0"

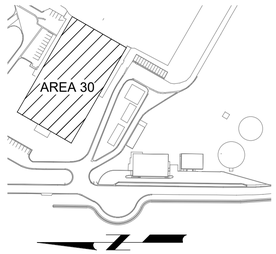

KEYMAP

REV	DATE	BY	DESCRIPTION
			BID SET

DESIGNED SKB
DRAWN PLU
CHECKED GCE
DATE FEBRUARY 2025

Digitally signed by Guy C. Ehlers
CN=Guy C. Ehlers, O=Carollo Engineers, C=US
Date: 2025.02.10 14:49:32 -07'00'
REGISTERED PROFESSIONAL ENGINEER
No. 5329023
GUY C. EHLERS
STATE OF UTAH

carollo

JORDAN VALLEY WATER CONSERVANCY DISTRICT

JORDAN VALLEY WATER TREATMENT PLANT
FILTER AND CHEMICAL FEED UPGRADES
ELECTRICAL
FILTER BUILDING LOWER LEVEL OVERALL PLAN

VERIFY SCALES
BAR IS ONE INCH ON ORIGINAL DRAWING
0 1"
IF NOT ONE INCH ON THIS SHEET, ADJUST SCALES ACCORDINGLY

JOB NO. 202001.10
DRAWING NO. 30E01
SHEET NO. 331 OF 531

PLOT DATE: 2/10/2025 4:49:32 PM

FILE NAME: Autodesk Docs://JVWCD 202001-100000 JVWTP Upgrades/20200169E0801.rvt

GENERAL NOTES:

1. LOCATE BUILDING GROUNDING AND PROVIDE MAGNETIC FLOWMETER GROUNDING.

KEY NOTES:

1. PROVIDE 120VAC, 1 POLE INSTRUMENT DISCONNECT PER DETAIL NA900/TYP.

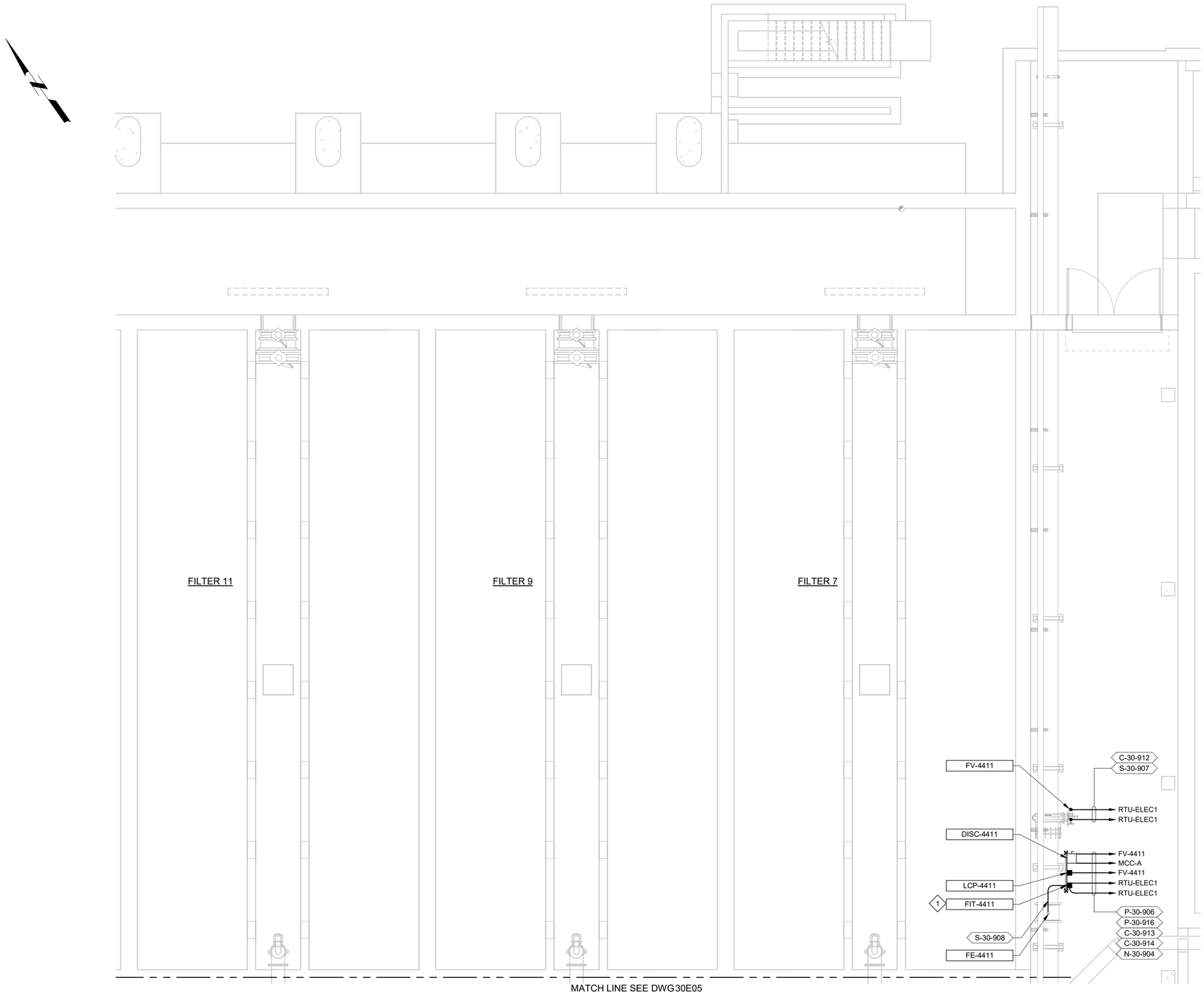

B **PARTIAL PLAN**
SCALE: 3/16" = 1'-0"

REV	DATE	BY	DESCRIPTION
			BID SET

DESIGNED SKB
DRAWN CLM
CHECKED GCE
DATE FEBRUARY 2025

Digitally signed by Guy C. Ehlers
Date: 2025.02.10 14:49:41 -07'00'
REGISTERED PROFESSIONAL ENGINEER
No. 5329023
GUY C. EHLERS
STATE OF UTAH

carollo

JORDAN VALLEY WATER CONSERVANCY DISTRICT

JORDAN VALLEY WATER TREATMENT PLANT
FILTER AND CHEMICAL FEED UPGRADES
ELECTRICAL
FILTER BUILDING AREA B LOWER LEVEL POWER AND CONTROL PLAN

VERIFY SCALES
BAR IS ONE INCH ON ORIGINAL DRAWING
0 1"
IF NOT ONE INCH ON THIS SHEET, ADJUST SCALES ACCORDINGLY

JOB NO. 202001.10
DRAWING NO. 30E02
SHEET NO. 332 OF 531

PLOT DATE: 2/10/2025 4:49:41 PM

FILE NAME: Autodesk Docs://JVWCD 202001-100000 JVWTP Upgrades/20200169E0801.rvt

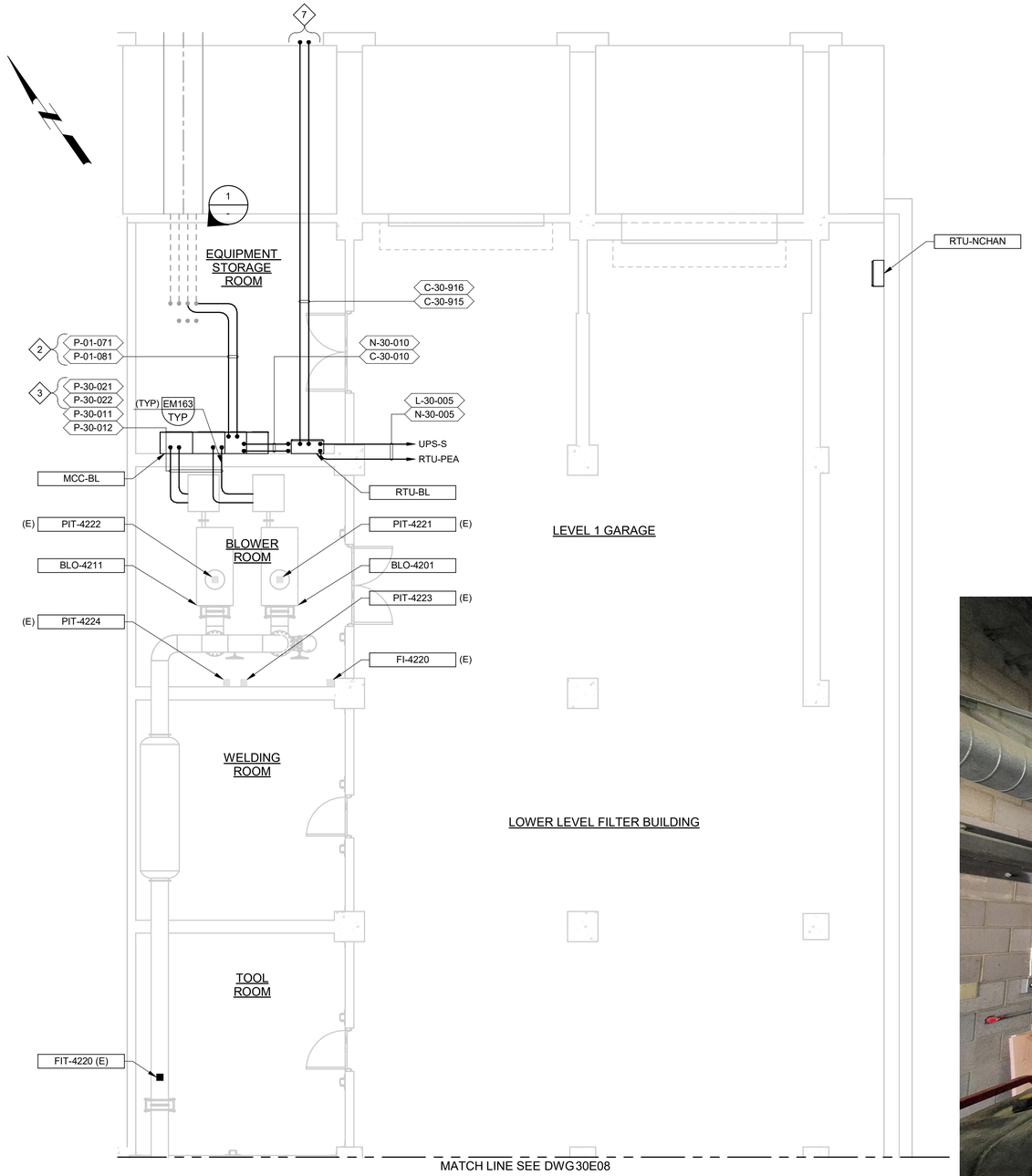

C **PLAN**
SCALE: 3/16" = 1'-0"

EXISTING BLOWER CONDUITS

1 **PHOTO**
SCALE: NO SCALE

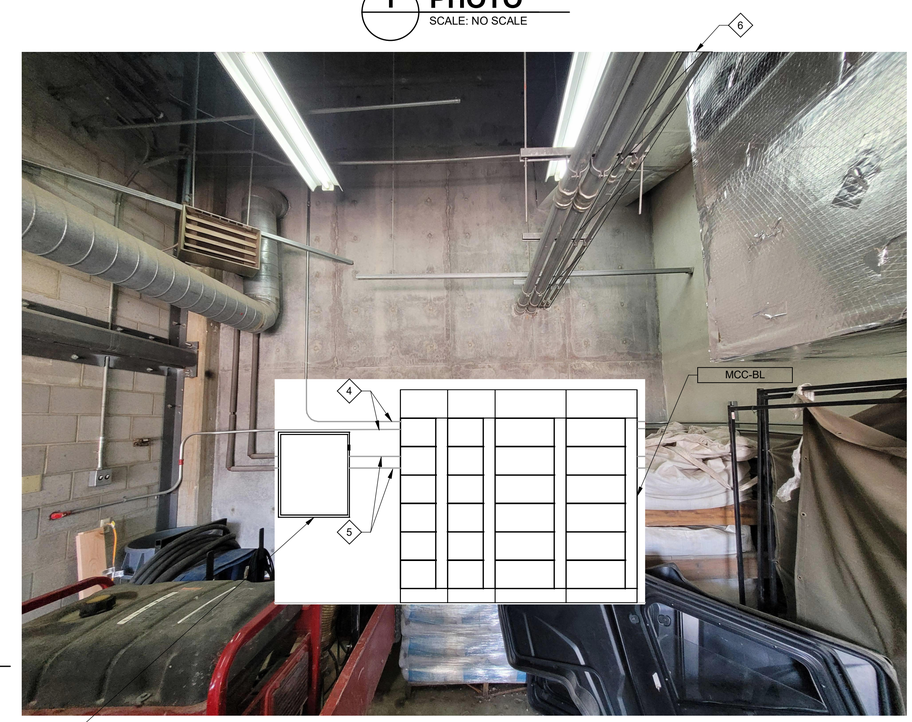

MCC-BL AND RTU-BL DRAFTED EQUIPMENT

2 **SECTION**
SCALE:NO SCALE

GENERAL NOTES:

1. NEW MCC SHOWN ON THIS DRAWING IS TALLER THAN THE DOORWAYS AND WILL NEED TO BE BROUGHT INTO THE BUILDING ON ITS SIDE. COORDINATE WITH MANUFACTURER FOR PROPER BRACING AND SUPPORTS TO PROTECT EQUIPMENT DURING INSTALLATION.

KEY NOTES:

1. INTERCEPT EXISTING POWER CONDUITS FROM PB #7 TO THE EXISTING BLOWERS.
2. ROUTE VIA EXISTING INTERCEPTED CONDUITS TO PB #7.
3. AT CONTRACTOR'S DISCRETION, THE EXISTING CONDUITS MAY BE REUSED AS A PATH BETWEEN BLOWER BLO-4211, BLO-4201 AND THE NEW MCC.
4. RELOCATE EXISTING LIGHTING AND FIRE ALARM CONDUITS.
5. RELOCATE EXISTING HOT WATER SUPPLY AND RETURN LINES.
6. DEMOLISH TWO SOLENOID CONDUITS AND RE-ROUTE TO NEW MCC-BL.
7. CONDUITS CONTINUE ON DRAWING 01E05.
8. CAP EXISTING CONDUITS.

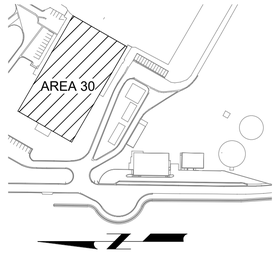

KEYMAP

REV	DATE	BY	DESCRIPTION
			BID SET

DESIGNED SKB
DRAWN PLU
CHECKED GCE
DATE FEBRUARY 2025

Digitally signed by Guy C. Ehlers
Date: 2025.02.10 16:49:52 -07'00'
REGISTERED PROFESSIONAL ENGINEER No. 5329023 GUY C. EHLERS STATE OF UTAH

carollo

JORDAN VALLEY WATER CONSERVANCY DISTRICT

JORDAN VALLEY WATER TREATMENT PLANT
FILTER AND CHEMICAL FEED UPGRADES
ELECTRICAL
HIGH RISE BUILDING AREA C LOWER LEVEL POWER AND CONTROL PLAN

VERIFY SCALES
BAR IS ONE INCH ON ORIGINAL DRAWING
0 1"
IF NOT ONE INCH ON THIS SHEET, ADJUST SCALES ACCORDINGLY

JOB NO. 202001.10
DRAWING NO. 30E03
SHEET NO. 333 OF 531

PLOT DATE: 2/10/2025 4:49:52 PM

FILE NAME: Autodesk Docs://JVWCD 202001-100000 JVWTP Upgrades/20200169E0801.rvt

GENERAL NOTES:

1. LOCATE BUILDING GROUNDING AND PROVIDE MAGNETIC FLOWMETER GROUNDING.

KEY NOTES:

1. PROVIDE 120VAC, 1 POLE INSTRUMENT DISCONNECT PER DETAIL NA900/TYP.
2. EXISTING MOTOR IS NOT INVERTER DUTY RATED. REWIND EXISTING MOTOR FOR INVERTER DUTY SERVICE WITH CLASS H INSULATION, OR PROVIDE NEW INVERTER DUTY RATED MOTOR.

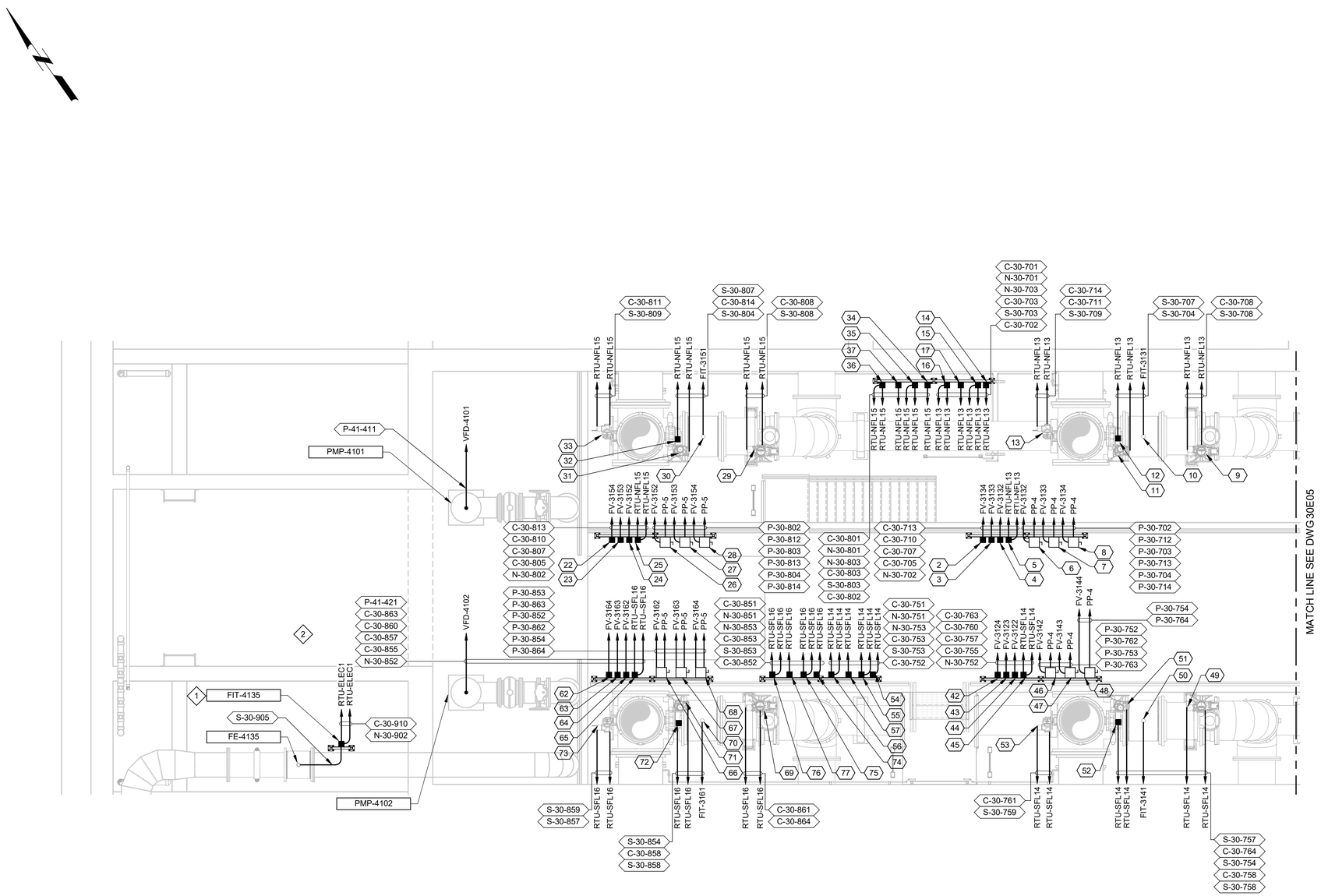

D PLAN

SCALE: 1/4" = 1'-0"

KEY TAGS:

1.	NOT USED	21.	NOT USED	41.	NOT USED	61.	NOT USED
2.	LCP-3134	22.	LCP-3154	42.	LCP-3144	62.	LCP-3164
3.	LCP-3133	23.	LCP-3153	43.	LCP-3143	63.	LCP-3163
4.	LCP-3132	24.	LCP-3152	44.	LCP-3142	64.	LCP-3162
5.	FIT-3131 (1)	25.	FIT-3151 (1)	45.	FIT-3141 (1)	65.	FIT-3161 (1)
6.	DISC-3132	26.	DISC-3152	46.	DISC-3142	66.	DISC-3162
7.	DISC-3133	27.	DISC-3153	47.	DISC-3143	67.	DISC-3163
8.	DISC-3134	28.	DISC-3154	48.	DISC-3144	68.	DISC-3164
9.	FV-3132	29.	FV-3152	49.	FV-3142	69.	FV-3162
10.	FE-3131	30.	FE-3151	50.	FE-3141	70.	FE-3161
11.	FV-3134	31.	FV-3154	51.	FV-3144	71.	FV-3164
12.	PIT-3131	32.	PIT-3151	52.	PIT-3141	72.	PIT-3161
13.	FV-3133	33.	FV-3153	53.	FV-3143	73.	FV-3163
14.	FSL-3130	34.	FSL-3150	54.	FSL-3140	74.	FSL-3160
15.	AIT-3131 (1)	35.	AIT-3151 (1)	55.	AIT-3141 (1)	75.	AIT-3161 (1)
16.	AIT-3130	36.	AIT-3150	56.	AIT-3140	76.	AIT-3160
17.	AIT-3139	37.	AIT-3159	57.	AIT-3149	77.	AIT-3169
18.	N/A	38.	N/A	58.	N/A	78.	N/A
19.	N/A	39.	N/A	59.	N/A	79.	N/A
20.	N/A	40.	N/A	60.	N/A	80.	N/A

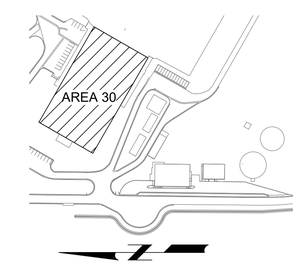

KEYMAP

REV	DATE	BY	DESCRIPTION
			BID SET

DESIGNED SKB
DRAWN PLU
CHECKED GCE
DATE FEBRUARY 2025

Digitally signed by Guy C. Ehlers
Date: 2025.02.11 10:36:32 -07'00'
REGISTERED PROFESSIONAL ENGINEER
No. 5329023
GUY C. EHLERS
STATE OF UTAH

carollo®

JORDAN VALLEY WATER CONSERVANCY DISTRICT

JORDAN VALLEY WATER TREATMENT PLANT
FILTER AND CHEMICAL FEED UPGRADES
ELECTRICAL
FILTER BUILDING AREA D LOWER LEVEL POWER AND CONTROL PLAN

VERIFY SCALES
BAR IS ONE INCH ON ORIGINAL DRAWING
0 — 1"
IF NOT ONE INCH ON THIS SHEET, ADJUST SCALES ACCORDINGLY

JOB NO. 202001.10
DRAWING NO. 30E04
SHEET NO. 334 OF 531

PLOT DATE: 2/11/2025 10:36:32 AM

FILE NAME: Autodesk Docs://JVWCD 202001-100000 JVWTP Upgrades/20200169E0801.rvt

GENERAL NOTES:

1. LOCATE BUILDING GROUNDING AND PROVIDE MAGNETIC FLOWMETER GROUNDING.

KEY NOTES:

1. PROVIDE 120VAC, 1 POLE INSTRUMENT DISCONNECT PER DETAIL NA900/TYP.
2. RELOCATE EXISTING PANEL TO ACCOMMODATE THE NEW PIPE PENETRATION.

KEY TAGS:

1.	N/A	41.	N/A	81.	LCP-3106
2.	LCP-3074	42.	LCP-3114	82.	LCP-3104
3.	LCP-3073	43.	LCP-3113	83.	LCP-3103
4.	LCP-3072	44.	LCP-3112	84.	LCP-3102
1 5.	FIT-3071	1 45.	FIT-3111	1 85.	FIT-3101
6.	DISC-3072	46.	DISC-3112	86.	DISC-3102
7.	DISC-3073	47.	DISC-3113	87.	DISC-3103
8.	DISC-3074	48.	DISC-3114	88.	DISC-3104
9.	FV-3072	49.	FV-3112	89.	FV-3102
10.	FE-3071	50.	FE-3111	90.	FE-3101
11.	FV-3074	51.	FV-3114	91.	FV-3104
12.	PIT-3071	52.	PIT-3111	92.	PIT-3101
13.	FV-3073	53.	FV-3113	93.	FV-3103
14.	FSL-3070	54.	FSL-3110	94.	FSL-3100
1 15.	AIT-3071	1 55.	AIT-3111	1 95.	AIT-3101
16.	AIT-3070	56.	AIT-3110	96.	AIT-3100
17.	PMP-3911	57.	AIT-3119	97.	N/A
18.	AIT-3079	58.	N/A	98.	N/A
19.	N/A	59.	N/A	99.	DISC-3106
20.	N/A	60.	N/A	100.	FV-3106
21.	N/A	61.	N/A	101.	AIT-3109
22.	LCP-3094	62.	LCP-3084	102.	LCP-3124
23.	LCP-3093	63.	LCP-3083	103.	LCP-3123
24.	LCP-3092	64.	LCP-3082	104.	LCP-3122
1 25.	FIT-3091	1 65.	FIT-3081	1 105.	FIT-3121
26.	DISC-3092	66.	DISC-3082	106.	DISC-3122
27.	DISC-3093	67.	DISC-3083	107.	DISC-3123
28.	DISC-3094	68.	DISC-3084	108.	DISC-3124
29.	FV-3092	69.	FV-3082	109.	FV-3122
30.	FE-3091	70.	FE-3081	110.	FE-3121
31.	FV-3094	71.	FV-3084	111.	FV-3124
32.	PIT-3091	72.	PIT-3081	112.	PIT-3121
33.	FV-3093	73.	FV-3083	113.	FV-3123
34.	FSL-3090	74.	FSL-3080	114.	FSL-3120
1 35.	AIT-3091	1 75.	AIT-3081	1 115.	AIT-3121
36.	AIT-3090	76.	AIT-3080	116.	AIT-3120
37.	AIT-3099	77.	AIT-3089	117.	N/A
38.	N/A	78.	N/A	118.	AIT-3129
39.	N/A	79.	PMP-3921		
40.	N/A	80.	N/A		

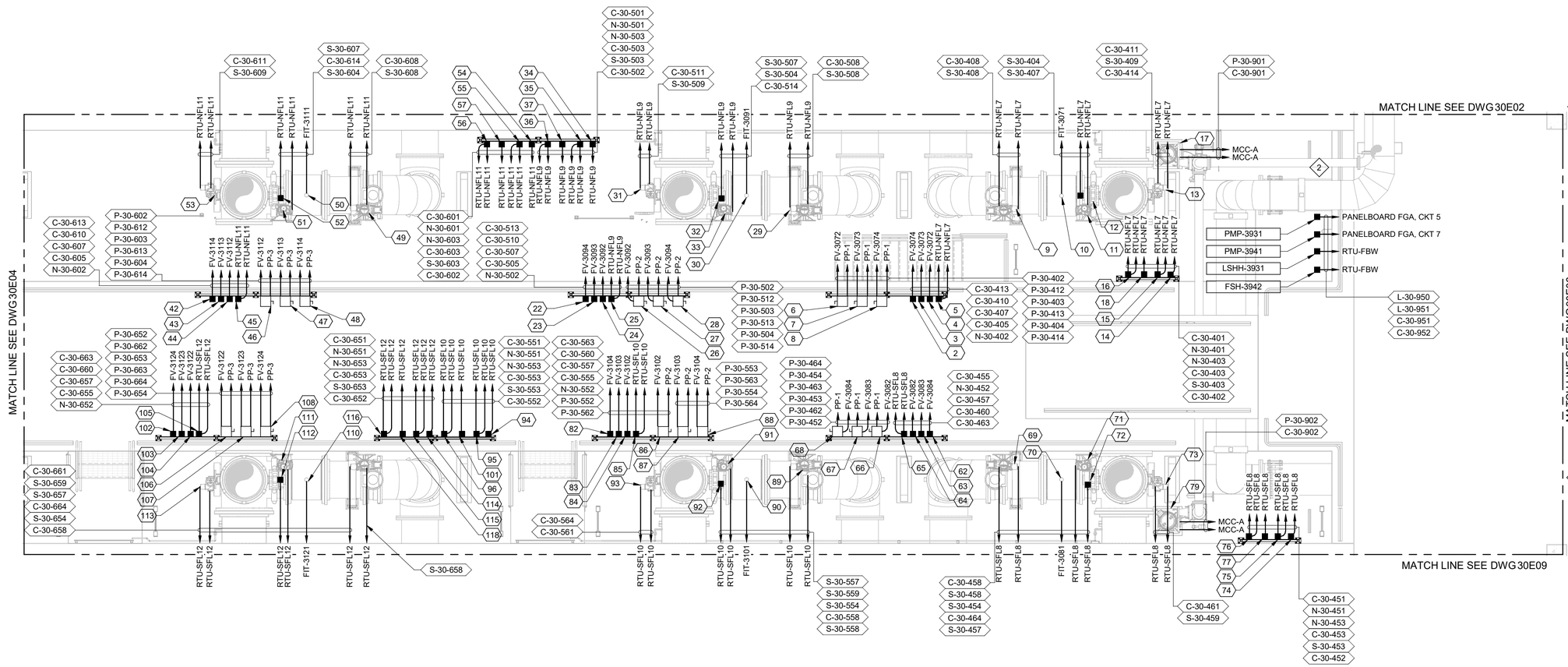

E PLAN

SCALE: 1/4" = 1'-0"

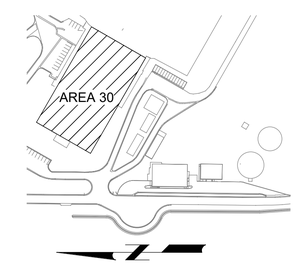

KEYMAP

REV	DATE	BY	DESCRIPTION
			BID SET

DESIGNED SKB
DRAWN PLU
CHECKED GCE
DATE FEBRUARY 2025

REGISTERED PROFESSIONAL ENGINEER No. 5329023 GUY C. EHLERS STATE OF UTAH

carollo

JORDAN VALLEY WATER CONSERVANCY DISTRICT

JORDAN VALLEY WATER TREATMENT PLANT
FILTER AND CHEMICAL FEED UPGRADES
ELECTRICAL
FILTER BUILDING AREA E LOWER LEVEL POWER AND CONTROL PLAN

VERIFY SCALES
BAR IS ONE INCH ON ORIGINAL DRAWING
0 1"
IF NOT ONE INCH ON THIS SHEET, ADJUST SCALES ACCORDINGLY

JOB NO. 202001.10
DRAWING NO. 30E05
SHEET NO. 335 OF 531

PLOT DATE: 2/10/2025 4:50:58 PM

FILE NAME: Autodesk Docs://JVWCD 202001-100000 JVWTP Upgrades/20200169E0801.rvt

GENERAL NOTES:

1. LOCATE BUILDING GROUNDING AND PROVIDE MAGNETIC FLOWMETER GROUNDING.

KEY NOTES:

1. PROVIDE 120VAC, 1 POLE INSTRUMENT DISCONNECT PER DETAIL NA900/TYP.

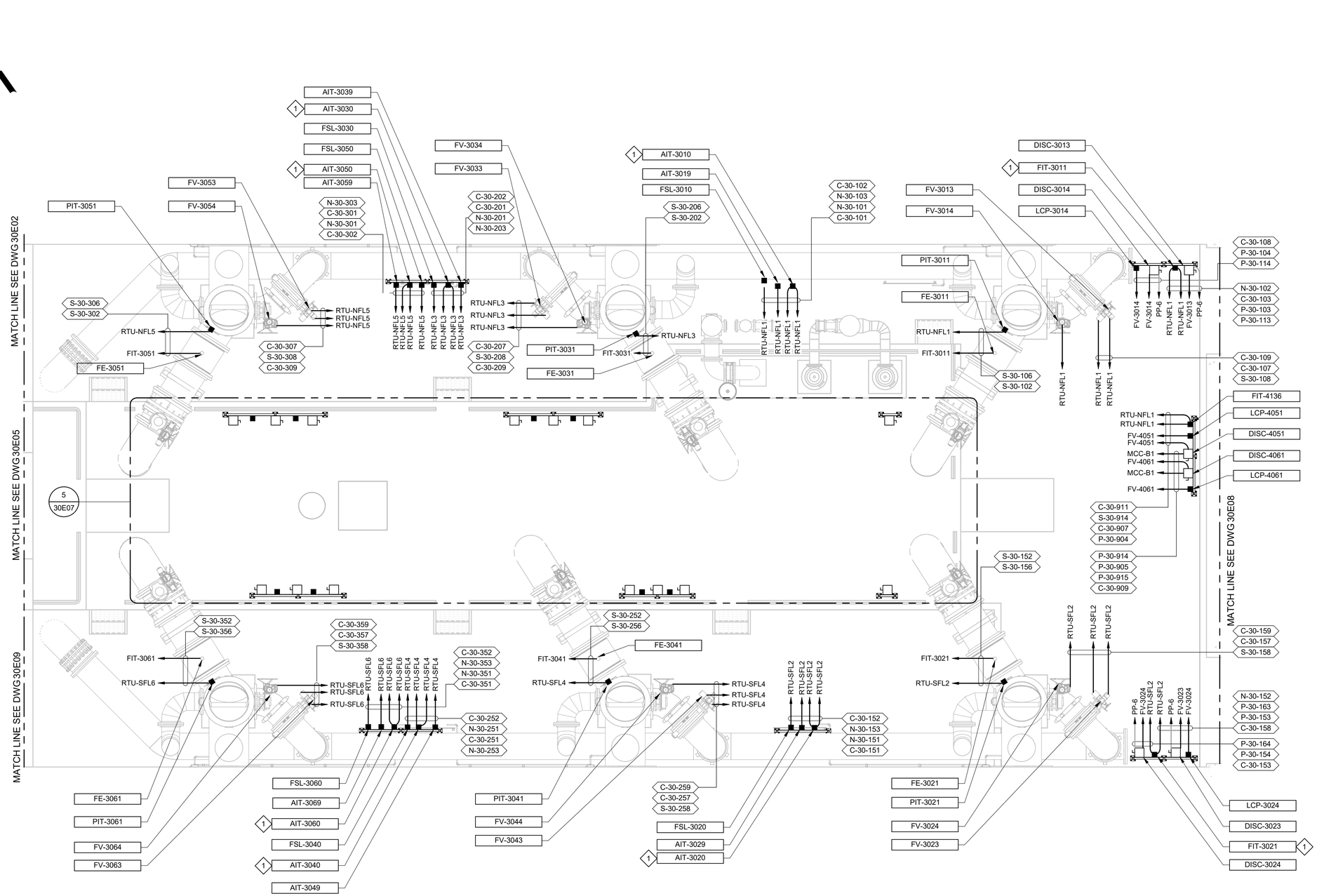

F PLAN

SCALE: 1/4" = 1'-0"

REV	DATE	BY	DESCRIPTION
			BID SET

DESIGNED SKB
DRAWN PLU
CHECKED GCE
DATE FEBRUARY 2025

Digitally signed by Guy C. Ehlers
Date: 2025.02.11 10:35:24 -07'00'
REGISTERED PROFESSIONAL ENGINEER No. 5329023 GUY C. EHLERS STATE OF UTAH

carollo

JORDAN VALLEY WATER CONSERVANCY DISTRICT

JORDAN VALLEY WATER TREATMENT PLANT
FILTER AND CHEMICAL FEED UPGRADES
ELECTRICAL
FILTER BUILDING AREA F LOWER LEVEL POWER AND CONTROL PLAN

VERIFY SCALES
BAR IS ONE INCH ON ORIGINAL DRAWING
0 1"
IF NOT ONE INCH ON THIS SHEET, ADJUST SCALES ACCORDINGLY

JOB NO. 202001.10
DRAWING NO. 30E06
SHEET NO. 336 OF 531

PLOT DATE: 2/11/2025 10:36:36 AM

FILE NAME: Autodesk Docs://JVWCD 202001-100000 JVWTP Upgrades/20200169E0801.rvt

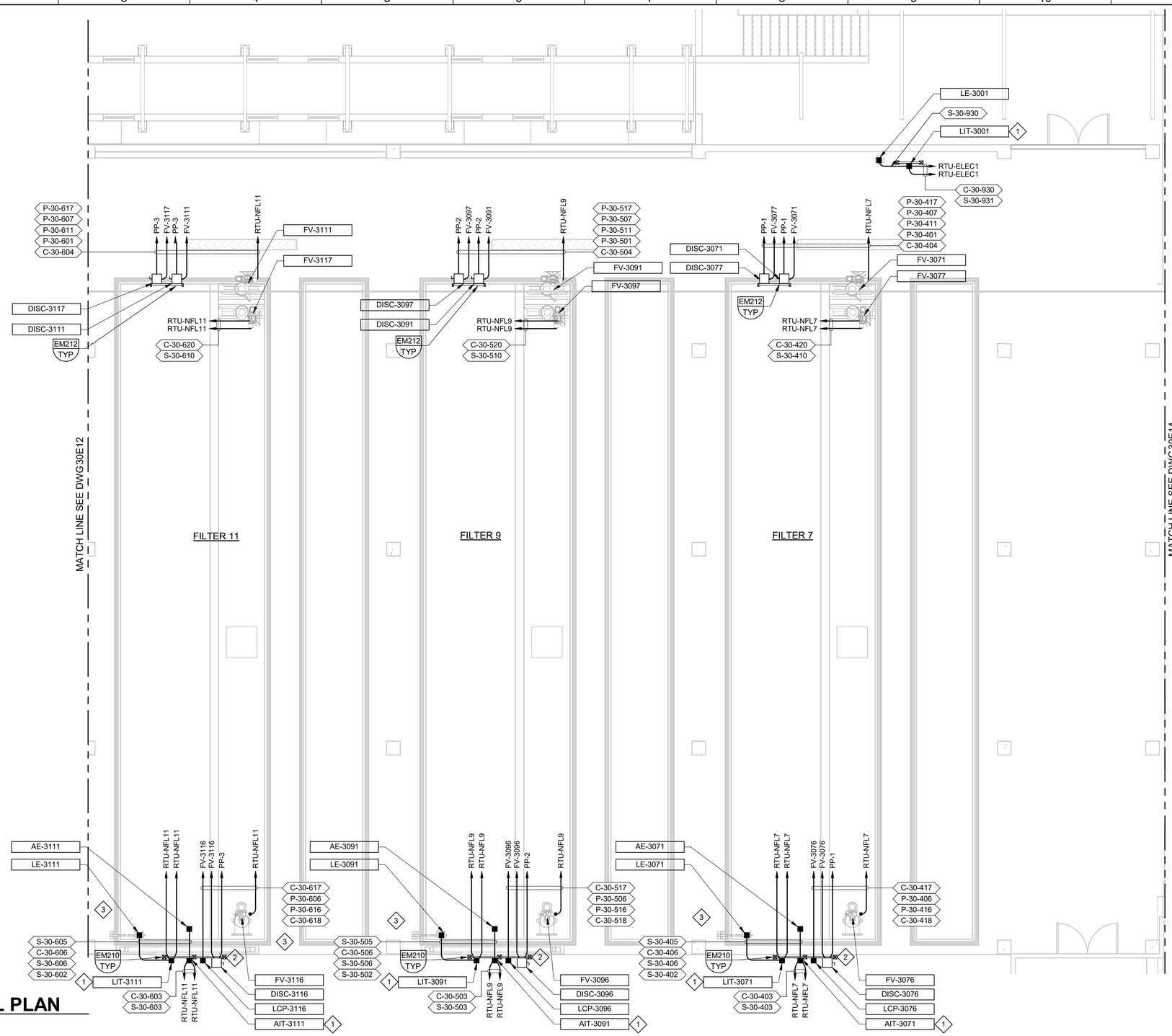

M **PARTIAL PLAN**
SCALE: 3/16" = 1'-0"

KEY NOTES:

1. PROVIDE 120VAC, 1 POLE INSTRUMENT DISCONNECT PER DETAIL NA900/TYP.
2. CONTROL PANELS ARE SHOWN AT THE END OF THEIR RESPECTIVE FILTER. PANELS WILL BE INSTALLED IN THE WIDE WALKWAYS TO MEET NEC WORKING SPACE REQUIREMENTS. OFFSET PANELS FROM DIFFERENT FILTERS SO THAT NEC WORKING SPACE REQUIREMENTS ARE SATISFIED (PANELS SHALL NOT BE MOUNTED DIRECTLY ACROSS FROM ONE ANOTHER). WALKWAYS WHERE 2 CONTROL PANELS WILL BE MOUNTED ARE LISTED IN THE KEY NOTES BELOW.
3. WIDE WALKWAY LOCATION FOR MOUNTING CONTROL PANELS.

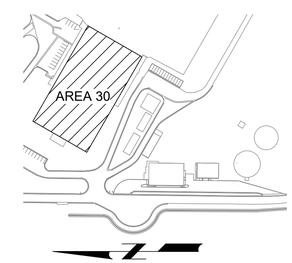

KEYMAP

REV	DATE	BY	DESCRIPTION
			BID SET

DESIGNED SKB
DRAWN PLU
CHECKED GCE
DATE FEBRUARY 2025

Digitally signed by Guy C. Ehlers
REGISTERED PROFESSIONAL ENGINEER
No. 5329023
GUY C. EHLERS
STATE OF UTAH

carollo

JORDAN VALLEY WATER CONSERVANCY DISTRICT

JORDAN VALLEY WATER TREATMENT PLANT
FILTER AND CHEMICAL FEED UPGRADES
ELECTRICAL
FILTER BUILDING AREA M UPPER LEVEL POWER AND CONTROL PLAN

VERIFY SCALES
BAR IS ONE INCH ON ORIGINAL DRAWING
0 1"
IF NOT ONE INCH ON THIS SHEET, ADJUST SCALES ACCORDINGLY

JOB NO. 202001.10
DRAWING NO. 30E13
SHEET NO. 343 OF 531

PLOT DATE: 2/11/2025 11:00:24 AM

FILE NAME: Autodesk Docs://JVWCD 202001-100000 JVWTP Upgrades/20200169E0801.rvt

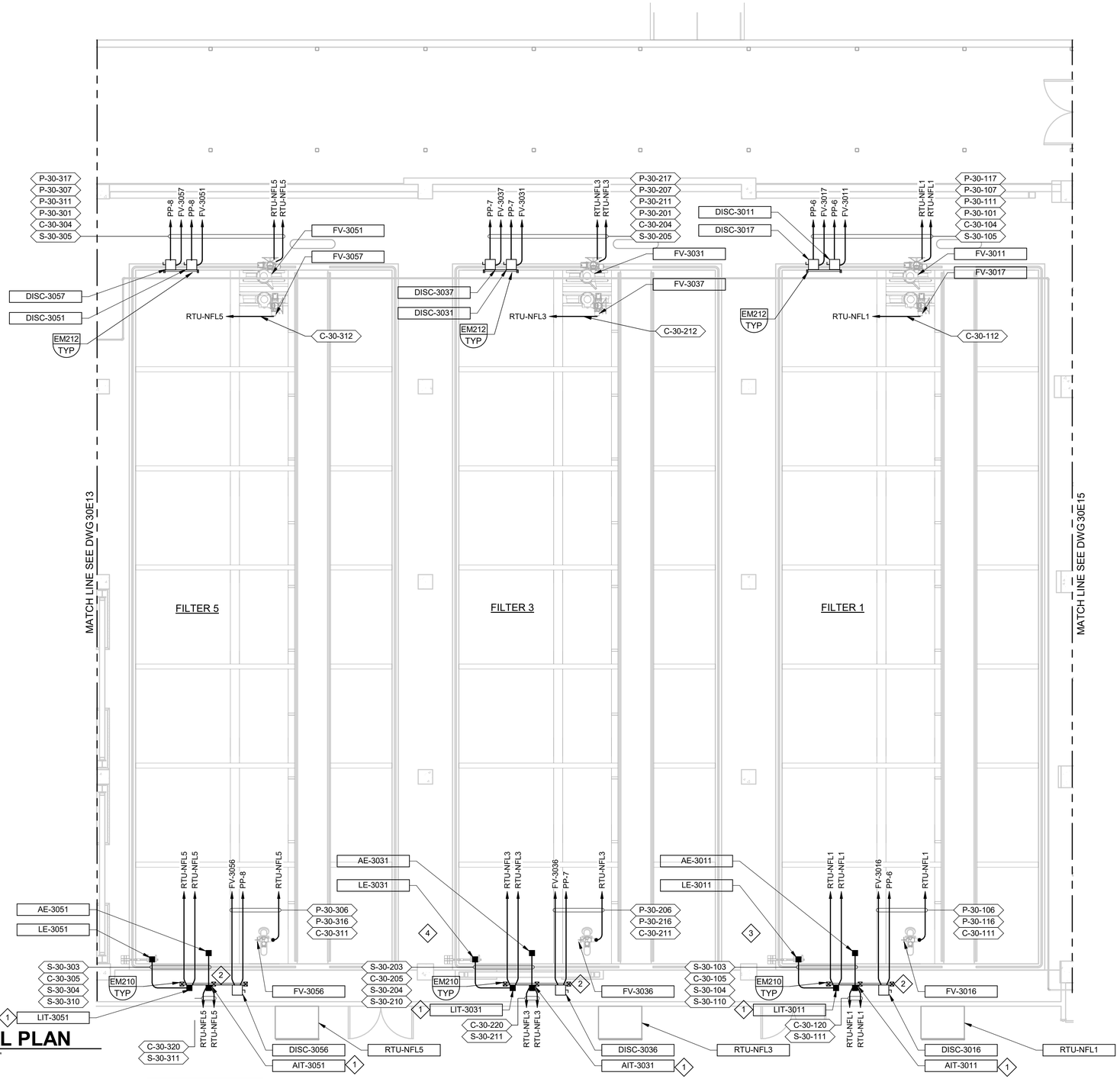

PARTIAL PLAN

SCALE: 3/16" = 1'-0"

KEY NOTES:

1. PROVIDE 120VAC, 1 POLE INSTRUMENT DISCONNECT PER DETAIL NA900/TYP.
2. CONTROL PANELS ARE SHOWN AT THE END OF THEIR RESPECTIVE FILTER. PANELS WILL BE INSTALLED IN THE WIDE WALKWAYS TO MEET NEC WORKING SPACE REQUIREMENTS. OFFSET PANELS FROM DIFFERENT FILTERS SO THAT NEC WORKING SPACE REQUIREMENTS ARE SATISFIED (PANELS SHALL NOT BE MOUNTED DIRECTLY ACROSS FROM ONE ANOTHER). WALKWAYS WHERE 2 CONTROL PANELS WILL BE MOUNTED ARE LISTED IN THE KEY NOTES BELOW.
3. WIDE WALKWAY LOCATION FOR MOUNTING CONTROL PANEL.
4. WIDE WALKWAY LOCATION FOR MOUNTING CONTROL PANELS 3 & 5.

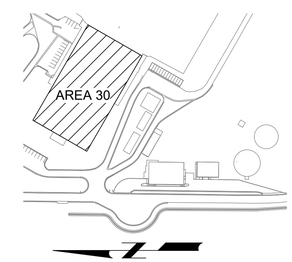

KEYMAP

REV	DATE	BY	DESCRIPTION
			BID SET

DESIGNED SKB
DRAWN CLM
CHECKED GCE
DATE FEBRUARY 2025

Digitally signed by Guy C. Ehlers
Date: 2025.02.11 09:54:24 -07'00'
REGISTERED PROFESSIONAL ENGINEER
No. 5329023
GUY C. EHLERS
STATE OF UTAH

carollo®

JORDAN VALLEY WATER CONSERVANCY DISTRICT

JORDAN VALLEY WATER TREATMENT PLANT
FILTER AND CHEMICAL FEED UPGRADES
ELECTRICAL
FILTER BUILDING AREA N UPPER LEVEL POWER AND CONTROL PLAN

VERIFY SCALES
BAR IS ONE INCH ON ORIGINAL DRAWING
0 1"
IF NOT ONE INCH ON THIS SHEET, ADJUST SCALES ACCORDINGLY

JOB NO. 202001.10
DRAWING NO. 30E14
SHEET NO. 344 OF 531

PLOT DATE: 2/11/2025 10:36:26 AM

FILE NAME: Autodesk Docs://JVWCD 202001-100000 JVWTP Upgrades/20200169E0801.rvt

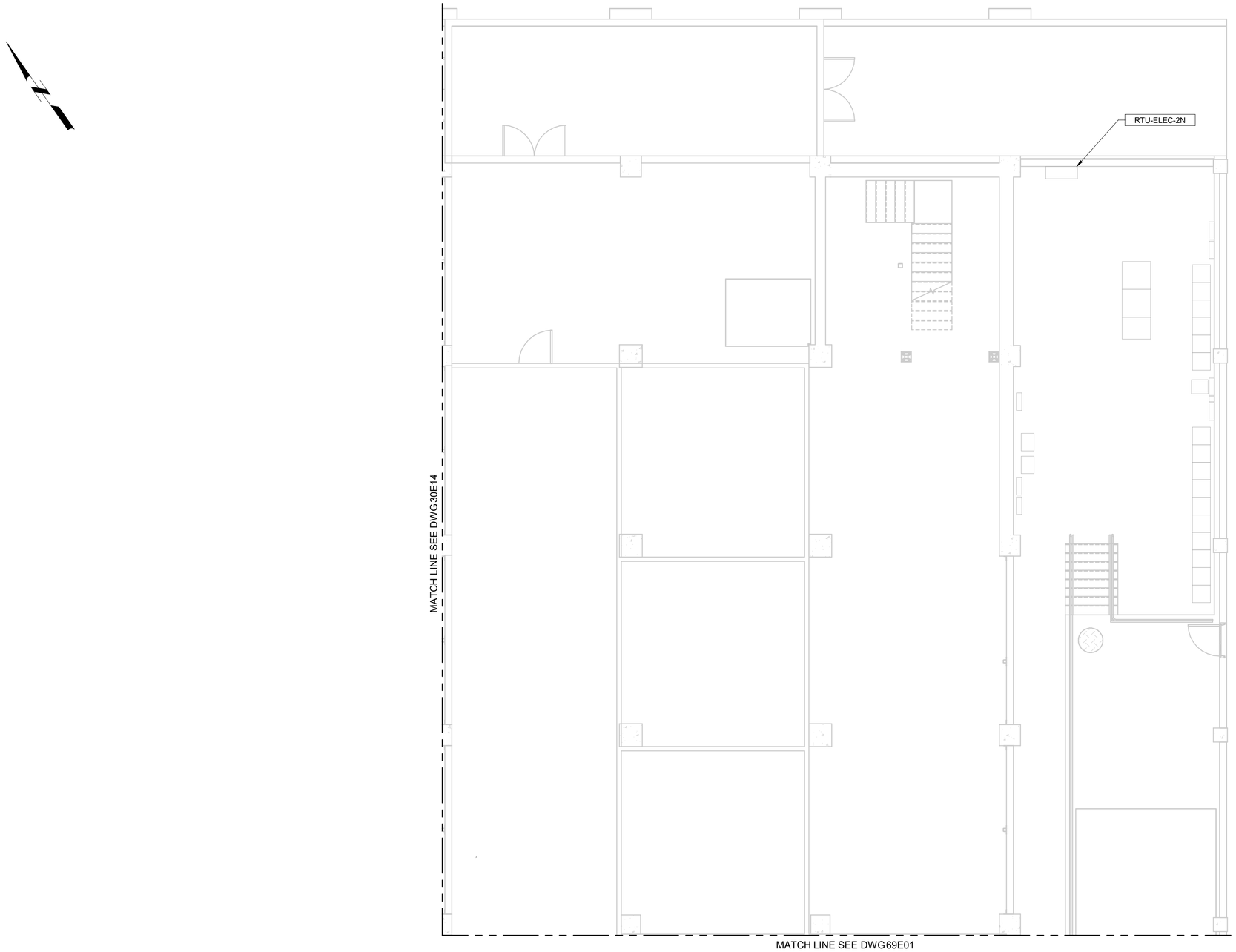

P PARTIAL PLAN

SCALE: 3/16" = 1'-0"

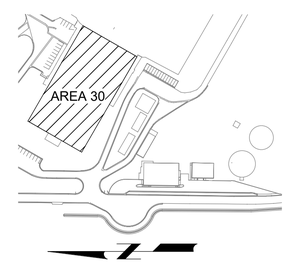

KEYMAP

REV	DATE	BY	DESCRIPTION
			BID SET

DESIGNED SKB
DRAWN PLU
CHECKED GCE
DATE FEBRUARY 2025

REGISTERED PROFESSIONAL ENGINEER No. 5329023 GUY C. EHLERS STATE OF UTAH

carollo

JORDAN VALLEY WATER CONSERVANCY DISTRICT

JORDAN VALLEY WATER TREATMENT PLANT
FILTER AND CHEMICAL FEED UPGRADES
ELECTRICAL
FILTER BUILDING AREA P UPPER LEVEL POWER AND CONTROL PLAN

VERIFY SCALES
BAR IS ONE INCH ON ORIGINAL DRAWING
0 1"
IF NOT ONE INCH ON THIS SHEET, ADJUST SCALES ACCORDINGLY

JOB NO. 202001.10
DRAWING NO. 30E15
SHEET NO. 345 OF 531

PLOT DATE: 2/10/2025 4:48:54 PM

FILE NAME: Autodesk Docs://JVWCD 202001-100000 JVWTP Upgrades/20200169E0801.rvt

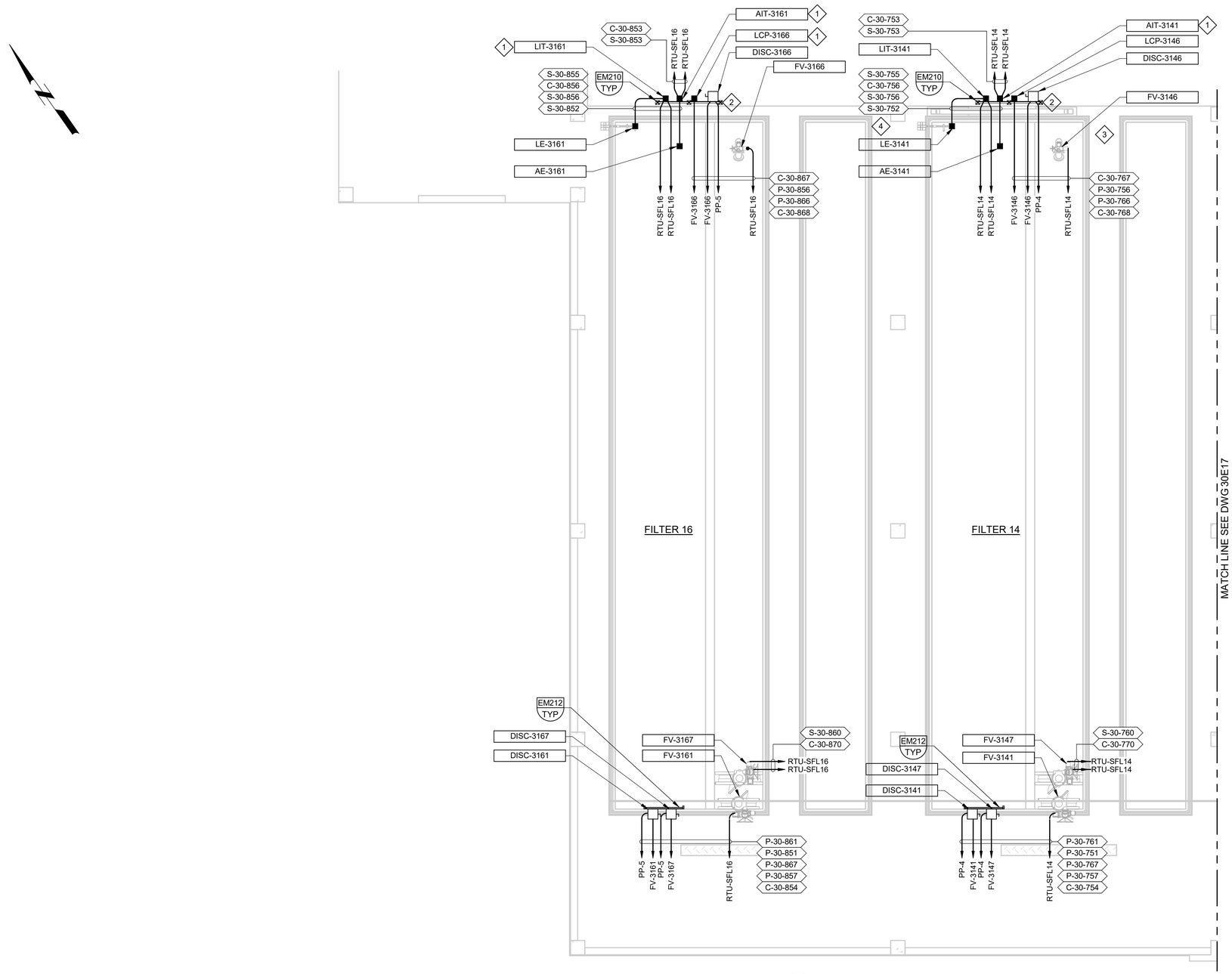

Q PARTIAL PLAN

SCALE: 3/16" = 1'-0"

KEY NOTES:

1. PROVIDE 120VAC, 1 POLE INSTRUMENT DISCONNECT PER DETAIL NA900/TYP.
2. CONTROL PANELS ARE SHOWN AT THE END OF THEIR RESPECTIVE FILTER. PANELS WILL BE INSTALLED IN THE WIDE WALKWAYS TO MEET NEC WORKING SPACE REQUIREMENTS. OFFSET PANELS FROM DIFFERENT FILTERS SO THAT NEC WORKING SPACE REQUIREMENTS ARE SATISFIED (PANELS SHALL NOT BE MOUNTED DIRECTLY ACROSS FROM ONE ANOTHER). WALKWAYS WHERE 2 CONTROL PANELS WILL BE MOUNTED ARE LISTED IN THE KEY NOTES BELOW.
3. WIDE WALKWAY LOCATION FOR MOUNTING CONTROL PANEL.
4. WIDE WALKWAY LOCATION FOR MOUNTING CONTROL PANELS 14 & 16.

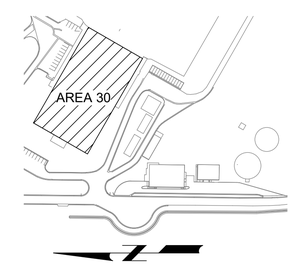

KEYMAP

REV	DATE	BY	DESCRIPTION
			BID SET

DESIGNED CLM
DRAWN PLU
CHECKED GCE
DATE FEBRUARY 2025

REGISTERED PROFESSIONAL ENGINEER No. 5329023 GUY C. EHLERS STATE OF UTAH

carollo

JORDAN VALLEY WATER CONSERVANCY DISTRICT

JORDAN VALLEY WATER TREATMENT PLANT
FILTER AND CHEMICAL FEED UPGRADES
ELECTRICAL
FILTER BUILDING AREA Q UPPER LEVEL POWER AND CONTROL PLAN

VERIFY SCALES
BAR IS ONE INCH ON ORIGINAL DRAWING
0 1"
IF NOT ONE INCH ON THIS SHEET, ADJUST SCALES ACCORDINGLY

JOB NO. 202001.10
DRAWING NO. 30E16
SHEET NO. 346 OF 531

PLOT DATE: 2/11/2025 10:36:27 AM

FILE NAME: Autodesk Docs://JVWCD 202001-100000 JVWTP Upgrades/20200169E0801.rvt

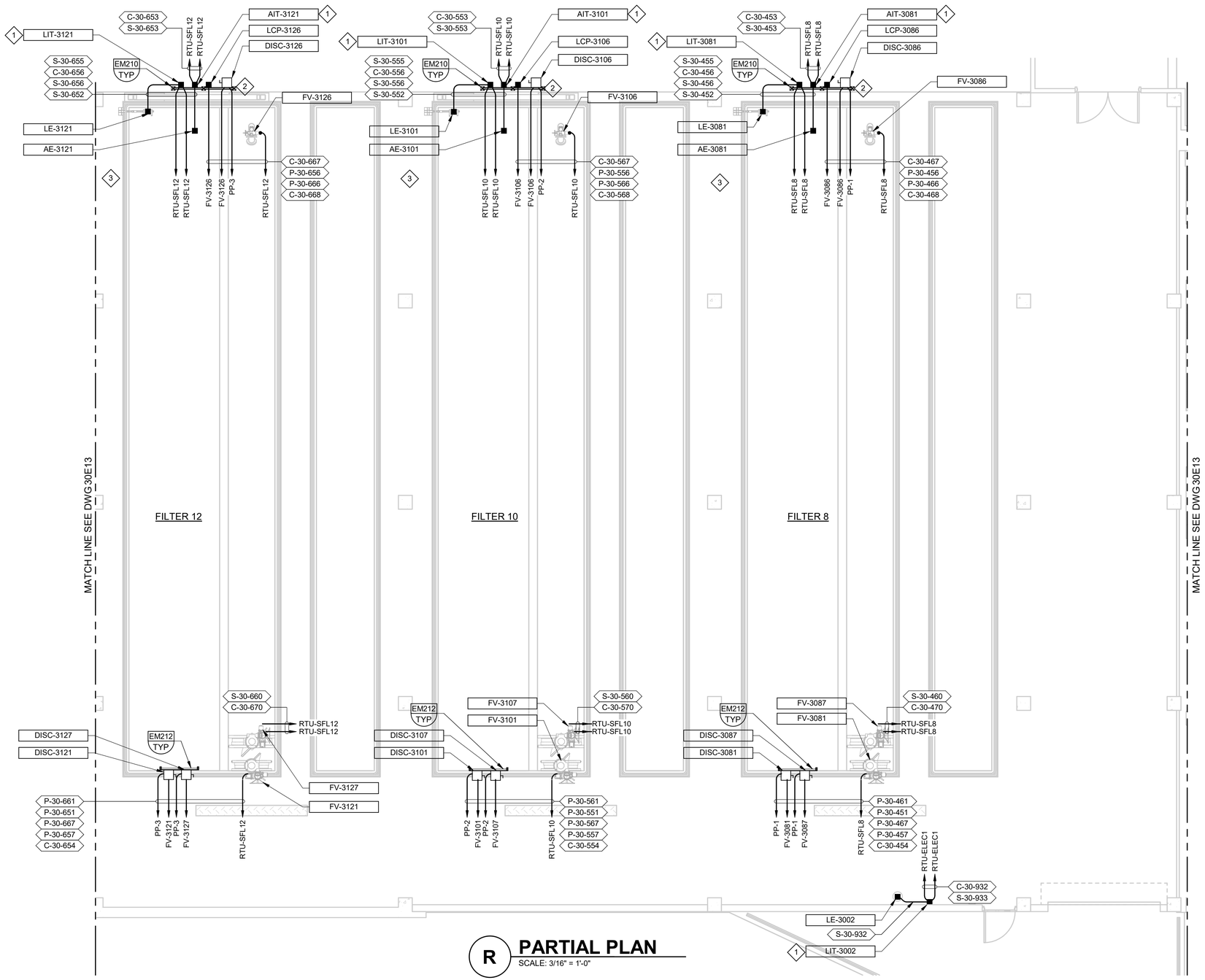

R **PARTIAL PLAN**
SCALE: 3/16" = 1'-0"

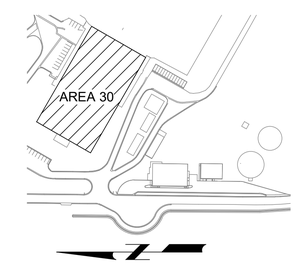

KEYMAP

KEY NOTES:

1. PROVIDE 120VAC, 1 POLE INSTRUMENT DISCONNECT PER DETAIL NA900/TYP.
2. CONTROL PANELS ARE SHOWN AT THE END OF THEIR RESPECTIVE FILTER. PANELS WILL BE INSTALLED IN THE WIDE WALKWAYS TO MEET NEC WORKING SPACE REQUIREMENTS. OFFSET PANELS FROM DIFFERENT FILTERS SO THAT NEC WORKING SPACE REQUIREMENTS ARE SATISFIED (PANELS SHALL NOT BE MOUNTED DIRECTLY ACROSS FROM ONE ANOTHER). WALKWAYS WHERE 2 CONTROL PANELS WILL BE MOUNTED ARE LISTED IN THE KEY NOTES BELOW.
3. WIDE WALKWAY LOCATION FOR MOUNTING CONTROL PANEL.

REV	DATE	BY	DESCRIPTION
			BID SET

DESIGNED SKB
DRAWN CLM
CHECKED GCE
DATE FEBRUARY 2025

REGISTERED PROFESSIONAL ENGINEER No. 5329023 GUY C. EHLERS STATE OF UTAH

carollo

JORDAN VALLEY WATER CONSERVANCY DISTRICT

JORDAN VALLEY WATER TREATMENT PLANT
FILTER AND CHEMICAL FEED UPGRADES
ELECTRICAL
FILTER BUILDING AREA R UPPER LEVEL POWER AND CONTROL PLAN

VERIFY SCALES
BAR IS ONE INCH ON ORIGINAL DRAWING
0 1"
IF NOT ONE INCH ON THIS SHEET, ADJUST SCALES ACCORDINGLY

JOB NO. 202001.10
DRAWING NO. 30E17
SHEET NO. 347 OF 531

PLOT DATE: 2/11/2025 10:36:28 AM

FILE NAME: Autodesk Docs://JVWCD 202001-100000 JVWTP Upgrades/20200169E0801.rvt

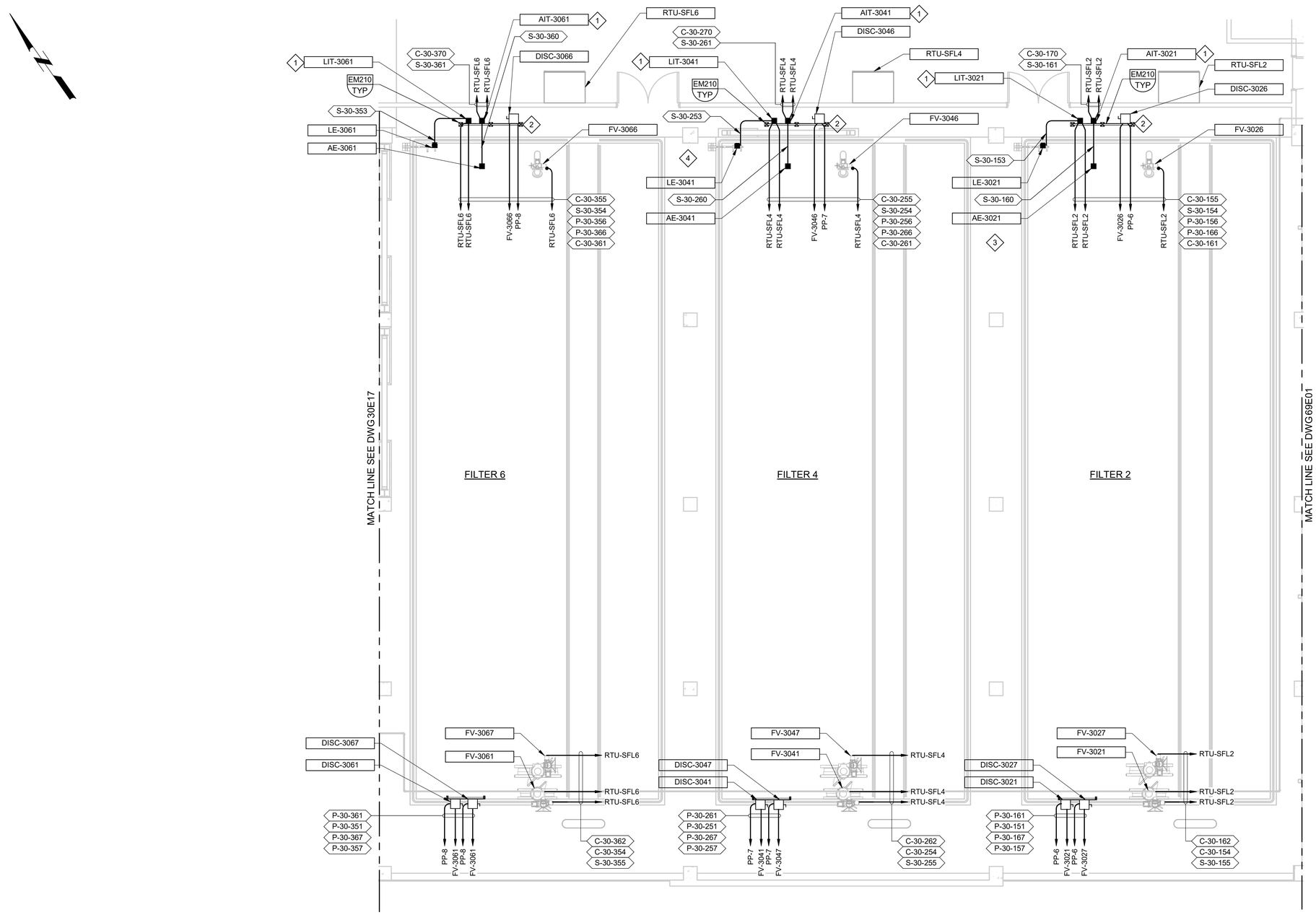

S PARTIAL PLAN

SCALE: 3/16" = 1'-0"

KEY NOTES:

1. PROVIDE 120VAC, 1 POLE INSTRUMENT DISCONNECT PER DETAIL NA900/TYP.
2. CONTROL PANELS ARE SHOWN AT THE END OF THEIR RESPECTIVE FILTER. PANELS WILL BE INSTALLED IN THE WIDE WALKWAYS TO MEET NEC WORKING SPACE REQUIREMENTS. OFFSET PANELS FROM DIFFERENT FILTERS SO THAT NEC WORKING SPACE REQUIREMENTS ARE SATISFIED (PANELS SHALL NOT BE MOUNTED DIRECTLY ACROSS FROM ONE ANOTHER). WALKWAYS WHERE 2 CONTROL PANELS WILL BE MOUNTED ARE LISTED IN THE KEY NOTES BELOW.
3. WIDE WALKWAY LOCATION FOR MOUNTING CONTROL PANEL.
4. WIDE WALKWAY LOCATION FOR MOUNTING CONTROL PANELS 4 & 6.

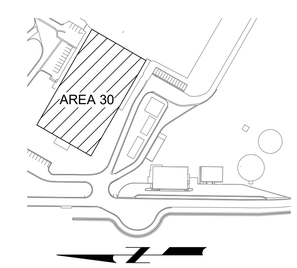

KEYMAP

REV	DATE	BY	DESCRIPTION
			BID SET

DESIGNED SKB
DRAWN CLM
CHECKED GCE
DATE FEBRUARY 2025

REGISTERED PROFESSIONAL ENGINEER No. 5329023 GUY C. EHLERS STATE OF UTAH

carollo

JORDAN VALLEY WATER CONSERVANCY DISTRICT

JORDAN VALLEY WATER TREATMENT PLANT
FILTER AND CHEMICAL FEED UPGRADES
ELECTRICAL
FILTER BUILDING AREA S UPPER LEVEL POWER AND CONTROL PLAN

VERIFY SCALES
BAR IS ONE INCH ON ORIGINAL DRAWING
0 1"
IF NOT ONE INCH ON THIS SHEET, ADJUST SCALES ACCORDINGLY

JOB NO. 202001.10
DRAWING NO. 30E18
SHEET NO. 348 OF 531

PLOT DATE: 2/11/2025 10:19:34 AM

FILE NAME: Autodesk Docs://JVWCD 202001-100000 JVWTP Upgrades/20200169E0801.rvt